Honeywell | Environmental & Energy Solutions

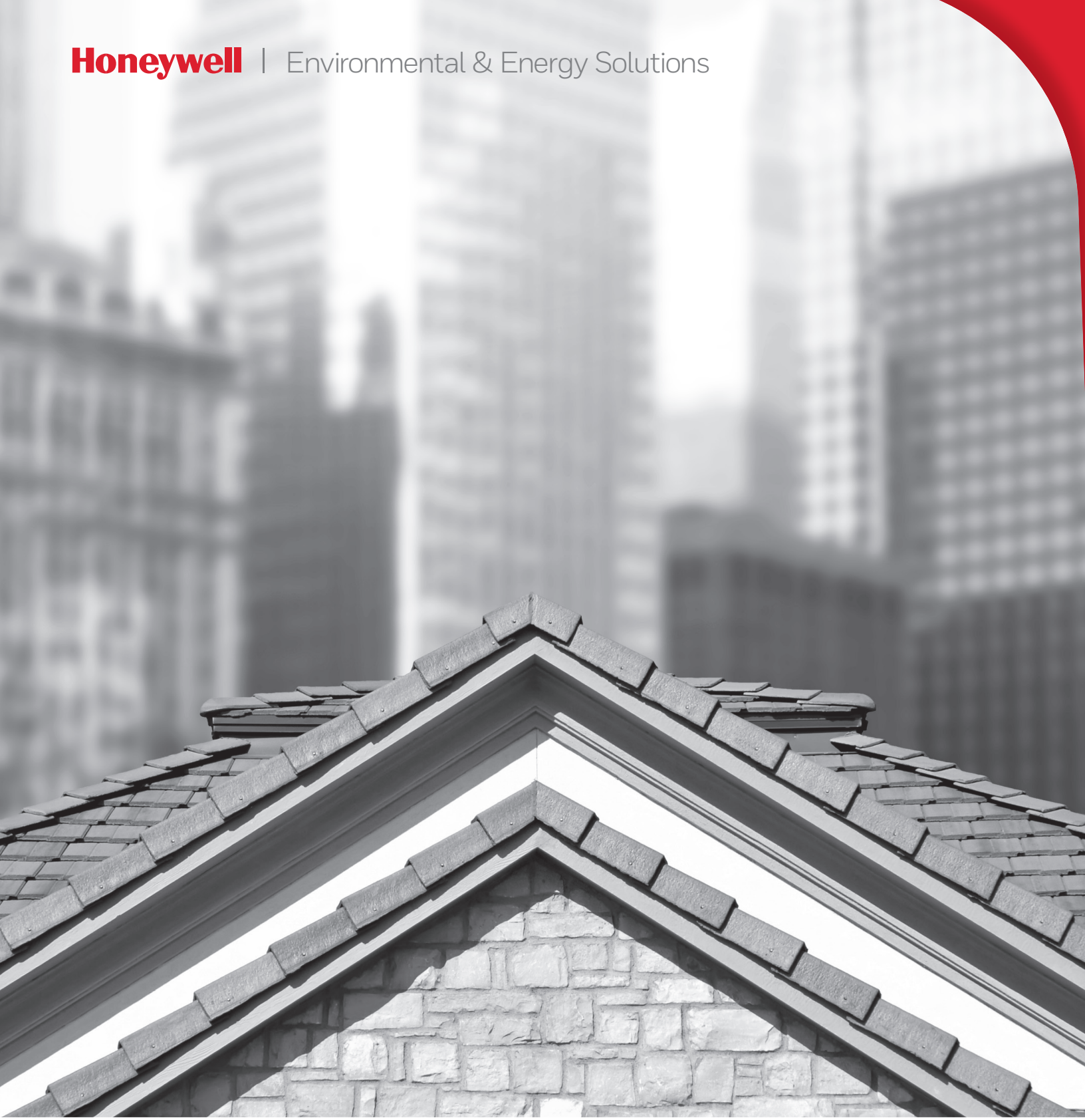

TRADELINE CATALOG

25th Edition

In addition to the most up-to-date information on Honeywell's products the 25th edition of the Tradeline® catalog has many new products including

— 2nd Generation Lyric™ Thermostat
— 24 Volt UV Air Purifier with AirBRIGHT™ Odor Absorption
— Electrode Humidifier
— Fast-Acting, Two-Position Actuators
— Lyric™ Water Leak and Freeze Detector
— New Globe Valve Linkage with flexible actuator mounting
— Redesigned threaded 2-way and 3-way threaded Control Ball Valve and Actuator combinations
— Silicon Carbide Hot Surface Igniter
— TheraPro Electronic Radiator Controller
— TrueZONE Bypass Dampers
— TrueZONE Damper Actuator
— VR9205 24 Vac Direct Ignition Combination 2-Stage Gas Controls
— WEB-700 Controller

For more information on these products, the product literature, a cross-reference for obsolete products, and the latest information about new product please visit us at https://customer.honeywell.com

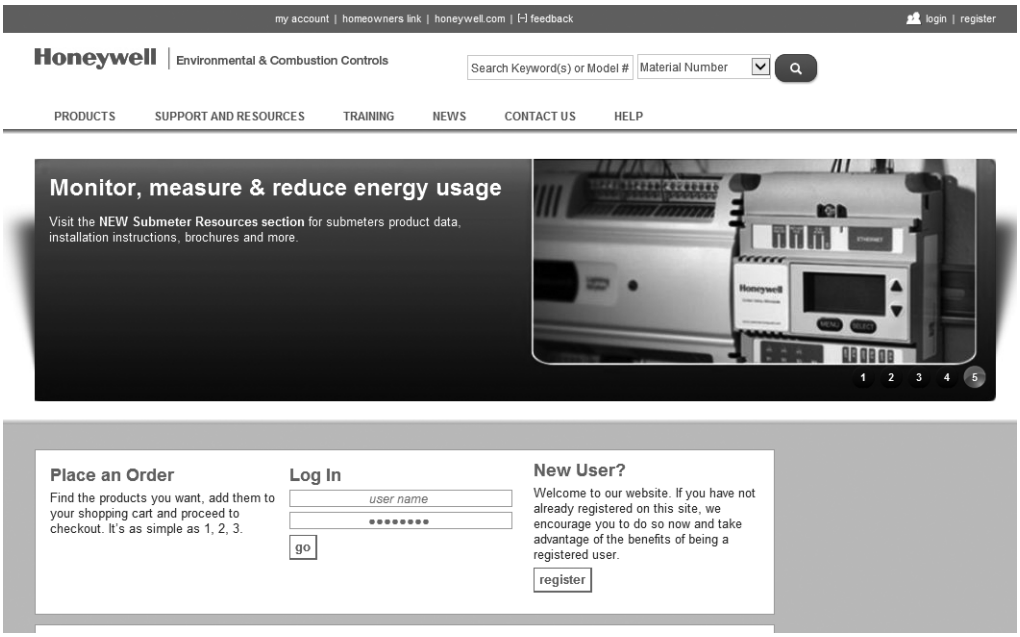

Changes to PDF

List of Models Corrected
Deletion of an accessory to M7285; M7286 Modutrol IV™ Motors
HR90 now compatible with steam
Clarification to Variable Frequency Drive Replacement Parts
Voltage correction on W7752
Bullets changed for R4222 and R8222
Changes in Pneumatic Accessories descriptions
Deleted CSA approval from T4031C; T6031C, D Ambistat Controller
Deleted MARD20 and MARD22
Changes to bullets for AMX300 Series DirectConnect™ Thermostatic Mixing Valve and Kits
Changes to spring color (strength) to VCZZ valve cartridges
Changed Seat materials for V5013N

Table of Contents

Model Index ... iii
Subject Index ... ix
ISO 9001 ... xvii
General Information ... xviii
Reference Information ... xx
Authorized Distributors ... xxvi

Home Control Thermostat and Zoning

Connected Thermostats ... 1
Programmable Thermostats ... 3
Non-Programmable Thermostats ... 12
Thermostat and Zoning Kits ... 21
RedLINK™ Accessories ... 22
Sensors ... 25
Winter Watchman ... 26
Electric Heat Thermostats ... 27
Thermostat Guards ... 33
Thermostat Parts and Accessories ... 36
TrueZONE Zoning Panels and Kits ... 38
Zone Control Panel Accessories ... 41
Bypass Dampers ... 42
Zone Control Dampers ... 43
Zone Control Damper Accessories ... 48
Residential Switches and Timers ... 49

Indoor Air Quality

Electronic Air Cleaners ... 53
Electronic Air Cleaners Parts and Accessories ... 55
Media Air Cleaners ... 59
Replacement Media Filters ... 63
Air Cleaner Parts and Accessories ... 67
TrueDRY™ Humidification Systems ... 69
Steam Humidification Systems ... 73
TrueEASE™ Humidifiers ... 75
Bypass Humidifiers ... 77
Humidifier Replacement Pads and Parts ... 78
Sail Switches ... 79
Digital IAQ Control ... 80
Humidity Controllers ... 81
Ultraviolet Air Treatment Systems ... 83
TrueFRESH Ventilation System ... 87
Fresh Air Ventilation System ... 96
Supply Air Ventilation Products ... 97

Residential Combustion Control

Combination Gas Controls ... 99
Gas Valve Selection Guide ... 118
SmartValve System Controls ... 120
SmartValve Selection Guide ... 123
Thermocouples and Thermopiles ... 126
Thermopiles and Thermocouples Selection Guide ... 127
Pilot Burners ... 128
Pilot Burner Parts and Accessories ... 132
Ignition Pilot Modules ... 133
Ignition Pilot Modules Selection Guide ... 137
Gas Ignition Module Accessories ... 138
Igniter Bracket Replacement Cross Reference ... 139
Igniters and Sensors ... 140
Pressure Switches ... 142
Electronic Fan Timers ... 143
Contactors ... 144
Contactors Selection Guide ... 152
Relays ... 154
Electric Heat Sequencer Selection Guide ... 160
Fan Centers ... 162
Fan Center Selection Guide ... 163
Transformers ... 164
Transformer Selection Guide ... 172
Oil Primaries Cross Reference ... 173
Oil Primaries ... 174
Flame Detectors ... 177
Magnetic Valves ... 178
Fan and Limit Controllers ... 179
Aquastat Controllers ... 182
Well Assemblies ... 197
Integrated Furnace Controls ... 198

Hydronic Controls

AQUATROL Zoning System ... 199
Hydronic Switching Relays ... 209
Transformers for Hydronic Controls ... 213
Residential Heating Valves and Actuators ... 214
Motorized Zone Valves ... 215
AquaPUMP Hydronic Circulating Pump ... 237
Differential Pressure Regulators ... 238
Air Vents and Eliminators ... 239
Boiler Fill Valves ... 247
Thermometers and Tridicators ... 248
Residential Expansion Tanks ... 249
Thermostatic Radiator Valves and Actuators ... 251
Commercial Expansion Tanks ... 264

Potable Water Products

Mixing Valves ... 267
Residential Expansion Tanks ... 277
Pressure Regulating Valve ... 278
Water Leak and Freeze Detector ... 281
Water Sediment Filters ... 282

Building Automation

Excel 5000 System ... 285
WEBs-AX System ... 299
WEBs-AX Security System ... 317
Spyder Controllers ... 327
Building Automation Appliances ... 333
Lighting Controllers ... 335
Light Commercial Building Systems ... 336
Legacy Building Systems ... 345

Table of Contents

Commercial Components

Refrigeration Controllers 349
Sail Switches 351
Temperature Controllers 352
Commercial Rectangular Dampers 369
Commercial Round Dampers 372
Direct Coupled Actuators - Non-Spring Return 374
Direct Coupled Actuators - Spring Return 382
Direct Coupled Actuators - Fire and Smoke 392
Direct Coupled Actuators - Accessories 394
Economizer Logic Modules 403
Economizer Damper Actuators 405
Economizer Sensors 407
Modutrol IV Motors 410
Kit Mounted Motors 444
Damper and Valve Linkages 447
Carbon Dioxide (CO_2) Sensors 453
Dew Point Sensor 455
Humidity Sensors 456
Pressure Sensors 458
Temperature Sensors 460
Submeters 490
Current Sensors 499
Fan Coil Thermostats 505
Wireless Occupancy Solution 510
Line Volt Thermostats 511
Proportional Thermostats 517
Programmable Commercial Thermostats 518
Communicating Thermostats 527
Pressure Independent Control Valves 534
Control Ball Valves 540
Butterfly Control Valves 551
Flanged Globe Valves 554
Threaded Globe Valves 563
Globe Valve Accessories and Replacement Parts 566
Cage Valves 569
Cartridge Globe Valves 570
Cartridge Cage Valves 574
Fan Coil Valves 584
Cartridge Globe Valve Actuators 587
Fan Coil Actuators 592
Direct Coupled Valve Actuators 594
Variable Frequency Drives 600

Pneumatic Controls

Pneumatic Humidistats 637
Pneumatic Thermostats 640
Pneumatic Transducers 654
Pneumatic Velocity Sensors/Controllers 655
Pneumatic Temperature Controllers 657
Pneumatic Pressure Controllers 661
Pneumatic Humidity Sensors 667
Pneumatic Temperature Sensors 668
Pneumatic Relays 671
Pneumatic Switches 683
Pneumatic Damper Actuators 690
Pneumatic Valves 707
Pneumatic Gauges 723
Pneumatic Accessories 724
Pneumatic Definitions and Abbreviations 731

Commercial/Industrial Combustion Controls

Product Selection Matrix 735
Microprocessor Burner Controls 754
SOLA Controllers 784
ControLinks Fuel Air Control System 789
Network Interface Communications 793
Flame Amplifiers 794
Flame Rods and Flame Rod Holders 796
Flame Detectors 798
Pilot Burners 811
Ignition Transformers 814
Firing Rate Motors and Linkages 817
Diaphragm Gas Valves 819
Butterfly Gas Valves 828
Gas Valve Actuators 830
Industrial Gas Valves 837
Pilot Gas Valves 845
Solenoid Gas Valves 846
Servo Regulated Gas Valves 851
Venturi Mixing Unit 854
Pressure Switches 855
Pressure and Limit Controllers 859
Modernization and Replacement 868
Electromechanical Burner Controls 869
Testers and Demonstrators 870

Industrial Flame Monitoring

Signal Processors 873
All-in-One Viewing Head and Processor 876
IFM Accessories 877
Viewing Heads 885

Training Materials

DVD/Videotapes 887
Training Booklets 888
Programmed Instruction Books 889
Service Publications 890
Classroom Training 891
FSG Textbook 892
Reference Manuals 893
Lab Trainers 895
Ordering Information 897

Warranty ..... Inside Back Cover

Numerics

700 ... 875
121371 ... 68-0040 ... 197
198162 ... 63-2230 ... 440
203659 ... 65-0093 ... 872
220736 ... 63-2228 ... 440
40003916 ... 69-0404 ... 233
50017460 ... 62-0233 ... 440
0KP2 ... 323, 324
0P10 ... 323, 324
0P30 ... 323, 324
0P40 ... 323, 324
0P90 ... 323, 324
123514A ... 65-0093 ... 872
600U ... 873

A

A7800 ... 65-0289 ... 870
AM100 ... 62-3098 ... 267
AM101 ... 62-3098 ... 267
AM102 ... 62-3098 ... 267
AMX100 ... 62-3074 ... 271
AMX101 ... 62-3074 ... 271
AMX102 ... 62-3074 ... 271
AMX300 ... 63-9876 ... 273, 274
AMX302 ... 63-9876 ... 273
AP400 ... 242
AP5027 ... 69-1581 ... 142
AP5208 ... 69-1581 ... 142
AP5210 ... 69-1581 ... 142
AQ1000TN2 ... 63-9379 ... 208
AQ1000TP2 ... 69-2245EF ... 208
AQ11 ... 207
AQ12 ... 207
AQ15 ... 206
AQ155 ... 206
AQ250 ... 68-0306, 69-1972 ... 200
AQ251 ... 69-1974 ... 202
AQ252 ... 69-1986, 69-1984 ... 203
AQ254 ... 69-1987 ... 204
AQ255 ... 69-1981 ... 205
AQ257 ... 69-1981 ... 205
ARDTZ ... 33-00079EFS ... 43
AT120 ... 68-0054 ... 164
AT140 ... 68-0054 ... 164, 213
AT140A ... 68-0054 ... 48, 165
AT150A ... 68-0054 ... 164
AT150B ... 68-0054 ... 164
AT150F ... 68-0054 ... 166
AT175A ... 68-0054 ... 164
AT175B ... 68-0054 ... 164
AT175F ... 68-0054 ... 167
AT20 ... 60-2254 ... 168
AT40 ... 60-2254 ... 168
AT72 ... 60-2254 ... 169
AT87 ... 60-2254 ... 170
AT88 ... 60-2254 ... 171
ATM100 ... 69-2472EF, 69-2474EFS ... 32
AX3-PPC ... 31-00024 ... 308

B

BP900 ... 62-3088 ... 246

C

C437D ... 60-2320 ... 855
C437E ... 60-2320 ... 855
C554 ... 60-2148 ... 177
C6097 ... 65-0237 ... 856
C7005 ... 60-2033 ... 813
C7007 ... 60-2024 ... 796
C7008 ... 60-2024 ... 796
C7009 ... 60-2024 ... 797
C7012 ... 60-2398 ... 798, 800
C7021 ... 63-2590 ... 460
C7023 ... 63-2590 ... 463
C7024 ... 65-0156 ... 801
C7027 ... 60-2026 ... 802
C7031 ... 63-2590 ... 466, 467
C7035 ... 60-2026 ... 803
C7041 ... 63-2590 ... 468, 471
C7044 ... 60-2026 ... 802
C7046 ... 60-2350 ... 471
C7061 ... 65-0223 ... 804
C7076 ... 95-8269 ... 806
C7089 ... 69-2493EFS ... 22, 25
C7100 ... 60-2521 ... 471
C7130 ... 63-2044 ... 472
C7150 ... 63-2072 ... 407
C7170 ... 63-2045 ... 472
C7189 ... 69-2493EFS ... 23, 25
C7232 ... 63-2571 ... 453
C7250 ... 62-0335 ... 407
C7262 ... 62-0353 ... 454
C7400A ... 63-2140 ... 408
C7400S ... 63-1365EF, 62-0332 ... 408
C7600 ... 63-2418 ... 409
C7632 ... 63-2615 ... 454
C7660 ... 63-2670EF ... 409
C7735 ... 69-1521EFS ... 25
C7750 ... 95-7508 ... 473
C7770A ... 74-2868 ... 473
C7772 ... 68-0213 ... 474
C7776A ... 74-2868 ... 475
C7778A ... 74-2868 ... 475
C7915 ... 65-0292 ... 809
C7927 ... 60-2026 ... 807
C7961 ... 65-0267 ... 808
C7962 ... 65-0277 ... 809
CARE ... 74-5136, 74-3556 ... 286
CHW36 ... 33-00097EF ... 281
CLB6438S ... 63-1388 ... 335
CLEPAS ... 77-2070 ... 683
CP980 ... 75-7270, 77-9869 ... 655, 656
CPR ... 69-2770EFS ... 42
CPRD ... 69-2770EFS ... 42
CR ... 62-0414 ... 504
CSP ... 63-2650 ... 502
CSS ... 63-2650 ... 502
CTP ... 63-2654 ... 500
CTS ... 63-2654 ... 500
CUL6438SR ... 63-4529 ... 331
CVL4022AS ... 63-4529 ... 331
CVL4024NS ... 63-4529 ... 331

D

D05 ... 62-3028EF ... 280
D06 ... 62-3052 ... 280
D1 ... 63-2671 ... 369
D146 ... 62-3019 ... 238
D2 ... 63-2598 ... 370
D3 ... 63-2598 ... 370
D690 ... 63-2577 ... 372
DG115 ... 69-2072 ... 80
DM7600 ... 63-2237 ... 373
DP1025 ... 69-0881 ... 145
DP1030 ... 69-0881 ... 145, 150
DP1040 ... 69-0881 ... 145
DP2020 ... 69-0881 ... 146
DP2030 ... 69-0881 ... 146, 150
DP2040 ... 69-0881 ... 146, 150
DP3030 ... 69-0881 ... 147
DP3040 ... 69-0881 ... 147
DP3050 ... 69-0881 ... 147
DP3060 ... 69-0881 ... 147
DP3075 ... 69-0881 ... 147
DP3090 ... 69-0881 ... 147
DP3AUX ... 69-0881 ... 151
DP4040 ... 69-0881 ... 149
DR120 ... 68-3079, 68-3080, 68-3088 ... 69
DR65 ... 68-3079, 68-3080, 68-3088 ... 69
DR90 ... 68-3079, 68-3080, 68-3088 ... 69
DS05 ... 62-3028EF ... 280
DS06 ... 62-3052 ... 278, 279, 280
DSP2672 ... 870
DSP3452 ... 871
DSP3943 ... 871
DSP3956 ... 871
DSP3980 ... 871
DSP3981 ... 871

E

EA122A ... 62-3038 ... 240, 241
EA79 ... 62-3034, 62-3033 ... 239
EARDTZ ... 33-00079EFS ... 43, 98
EC7820 ... 66-2040 ... 754
EC7823 ... 66-2031 ... 758
EC7830 ... 66-2041 ... 755
EC7840 ... 66-2027 ... 764
EC7850 ... 66-2041 ... 755
EC7885 ... 66-1147 ... 765
EC7890 ... 66-1195 ... 768
EC7895 ... 66-2026 ... 769

F

F100F ... 68-0239EF ... 61
F200 ... 68-0238EF ... 59
F300E ... 69-0756 ... 53
F52F ... 68-0074 ... 57
F74C ... 62-3061 ... 282
F76 ... 62-3015 ... 283
FASA ... 881
FC100 ... 50-1312 ... 63
FC200 ... 50-1312 ... 63
FC2200 ... 50-1312 ... 63
FC2400 ... 50-1312 ... 63
FC37 ... 67
FC40R ... 50-1312 ... 65
Flametools ... 32-00003 ... 877
FM911 ... 33-00022 ... 247
FOC ... 881
FSP1535 ... 95-6910 ... 872
FSP5004 ... 60-0219 ... 872
FV147 ... 242
FV180 ... 62-3086 ... 242

G

GHE ... 69-2682 ... 883
GS200 ... 248
GT162 ... 248

H

H10 ... 63-2715 ... 490
H20 ... 63-2716 ... 491
H32 ... 63-4530 ... 492
H34 ... 31-00046 ... 494
H46 ... 60-2097 ... 81
H50 ... 63-2717 ... 495
H600 ... 60-0032 ... 82
H6062 ... 33-00003, 33-00118 ... 73, 80
H7625 ... 63-1305 ... 456
H7635 ... 63-1305 ... 456

Model Index

H7636 ..... 63-1305 456
H7655 ..... 63-1305 456
H7656 ..... 63-1305 456
H8908 ..... 69-1341EF 81
HC22 ..... 69-1576EF 78
HC26 ..... 69-1576EF 78
HD2 ..... 63-4384 497
HD5 ..... 63-4384 497
HE100 ..... 69-2414EF 75
HE150 ..... 69-2414EF 75
HE200 ..... 69-2414EF 75
HE225 ..... 68-0244 77
HE250 ..... 69-2414EF 75
HE265 ..... 68-0244 77
HE300 ..... 69-2414EF 75
HIDR 63-2718 496
HM600 74
HM700 ..... 33-00118 73
HMMU 63-4531 493
HP970 ..... 77-1003 637
HP971 ..... 77-9833 667
HP972 ..... 77-9834 638
HR90 ..... 33-00084EFS 254
HSS-DPS 63-2711 455
HVC00 ..... 69-2316EFS 97
HVC20 ..... 69-2316EFS 97
HVFDCD ..... 62-0312, 62-2023 ..... 600, 601, 602
HVFDSB ..... 63-4520 ..... 606, 607, 618
HVFDSD ..... 38-00027, 63-4520 ..... 603, 604 618
HZ221 ..... 69-2200 39
HZ311 ..... 69-2069EFS 39
HZ322 ..... 68-3072 38
HZ432 ..... 68-3071 38

I

IF-LON 293
IO-16 ..... 74-4035, 95-7749 ..... 305, 321
IO-34 ..... 74-4035 305
ISO 877

L

L4006 ..... 60-2104 182
L4008 ..... 60-2104 184
L4029 ..... 60-2263 179
L404F 71-2429 859
L404T 71-2429 861
L404V 71-2429 861
L4064 ..... 68-0024 ..... 180, 181
L4079 ..... 60-2156 862
L4081 ..... 60-2105 187
L408J 65-0287 863
L4103 ..... 60-2344 185
L480 ..... 60-2203 349
L482 ..... 60-2203 349
L6006 ..... 60-2104 182
L6008 ..... 60-2104 184
L6081 ..... 60-2105 187
L7224U 69-1720EFS 189
L8100 ..... 60-2336 186
L8124 ..... 60-2061 190
L8148 ..... 60-2278 192
L91 ..... 60-2152, 65-0059 864
LCD-CT043 ..... 74-5088 311
LCD-GT043 ..... 74-5088 311
LP907 ..... 77-9231 640
LP914 ..... 77-9268 668
LP915 ..... 77-9268 669
LP916 ..... 95-5559EF 641
LP920 ..... 77-9873 657

M

M4185 ..... 63-2627 414
M436 ..... 60-2119 444
M6063 ..... 95C-10887 214
M6184 ..... 63-2629 416
M6194 ..... 63-2629 416
M6274 ..... 63-2629 422
M6284 ..... 63-2629 ..... 418, 422
M6285 ..... 63-2629 ..... 420, 422
M6294 ..... 63-2629 ..... 418, 422
M6410 ..... 62-0100 587
M6415 ..... 63-2100 405
M6435 ..... 62-0100 588
M7164 ..... 63-2640 424
M7215 ..... 63-2100 405
M7274 ..... 63-7098 426
M7284 ..... 63-7098 426
M7285 ..... 63-2640 429
M7286 ..... 63-2640 429
M7294 ..... 63-7098 426
M7410 ..... 62-0100 587
M7415 ..... 63-2100 405
M7435 ..... 62-0100 588
M7685 ..... 63-2203 431
M8185 ..... 63-2627 414
M835 ..... 60-2120 445
M836 ..... 60-2119 444
M8405 ..... 63-2100 405
M8415 ..... 63-2100 405
M847 ..... 95C-10190 445
M847D 33-00038 48
M9164 ..... 63-2631 433
M9174 ..... 63-2631 433
M9175 ..... 63-2631 437
M9182 ..... 63-2631 437
M9184 ..... 63-2631 433
M9185 ..... 63-2631 437
M9191 ..... 63-2631 433
M9194 ..... 63-2631 433
M9484D 63-1157 817
M9484E 63-1157 817
M9484F 63-1157 817
M9494D 63-1157 817
M9494F 63-1157 817
MARD 69-1551 44
MCSP 63-2720 504
MCSS 63-2720 504
ML6161 ..... 63-2209 374
ML6174 ..... 63-2209 376
ML6420 ..... 63-2533 594
ML6421 ..... 63-2515 595
ML6425 ..... 63-2516 596
ML6984 ..... 95C-10939, 95C-10879 597
ML7161 ..... 63-2209 374
ML7174 ..... 63-2209 376
ML7420 ..... 63-2533 594
ML7421 ..... 63-2515 595
ML7425 ..... 63-2516 596
ML7984 ..... 95C-10939, 95C-10753 598
ML7999A ..... 65-0239 ..... 791, 792
ML7999B ..... 65-0264, 65-0239 ..... 791, 792
MLH 62-0296 459
MMU 63-4531 493
MN6105 ..... 63-2632 378
MN6110 ..... 63-2632 379
MN6120 ..... 63-2588 380
MN6134 ..... 63-2588 381
MN7220 ..... 63-2588 380
MN7234 ..... 63-2588 381
MN7505 ..... 63-2632 378
MN7510 ..... 63-2632 379
MP516 ..... 77-9247 691
MP909D 77-9870 692
MP909E 77-9030 693
MP909H 77-9030 693
MP913 ..... 95-7207 695
MP918A 95-6075 696
MP918B 95-6075 696
MP920 ..... 77-6087 698
MP953C 77-3001 701
MP953D 77-3001 701
MP953E 77-3001 703
MP953F 77-3001 703
MP958 ..... 95-7541 705
MS3103 ..... 63-1336 382
MS3105 ..... 63-2607 384
MS3110 ..... 63-1296 387
MS3120 ..... 63-2607 389
MS4103 ..... 63-1336 382
MS4104F 63-2740 392
MS4105 ..... 63-2607 384
MS4109F 63-2740 393
MS4110 ..... 63-1296 387
MS4120 ..... 63-2607 389
MS4120F 63-2584 391
MS4604F 63-2740 392
MS4609F 63-2740 393
MS4620F 63-2584 391
MS7403 ..... 63-1336 382
MS7405 ..... 63-2607 384
MS7503 ..... 63-1336 382
MS7505 ..... 63-2607 384
MS7510 ..... 63-1296 387
MS7520 ..... 63-2607 389
MS8103 ..... 63-1336 382
MS8104F 63-2740 392
MS8105 ..... 63-2607 384
MS8109F 63-2740 393
MS8110 ..... 63-1296 387
MS8120 ..... 63-2607 389
MS8120F 63-2584 391
MT110 ..... 95C-10682 263
MV876 ..... 62-3061 284
MVN ..... 63-4378EFS 537, 549
MX127 ..... 62-3079 275
MX128 ..... 62-3079 275
MX129 ..... 62-3079 275
MX130 ..... 62-3079 275
MX131 ..... 62-3079 275
MX132 ..... 62-3079 275
MZV 62-3099 235

N

N05 ..... 63-2632 378
N10 ..... 63-2632 379
N20 ..... 63-2588 380
N34 ..... 63-2588 381
NXB ..... 63-1319 ..... 320, 622, 636
NXP ..... 63-1319 ..... 619, 636
NXS ..... 63-1319 ..... 619, 636

P

P522 ..... 66-2067 874
P643 ..... 77-9269 684
P658 ..... 77-9829 685
P7640 ..... 63-1306 458
P7810 ..... 65-0285 866
PC3F 68-3083, 68-3084, 68-3085 237

PCG.....68-3083, 68-3084, 68-3085..... 237
PLS530.. 69-2457EFS, 69-2458EFS..... 49
PLS531.. 69-2457EFS, 69-2458EFS..... 49
PLS550.. 69-2454EFS, 69-2455EFS..... 50
PLS551.. 69-2454EFS, 69-2455EFS..... 50
PLS730.. 69-2457EFS, 69-2458EFS..... 49
PLS731.. 69-2457EFS, 69-2458EFS..... 49
PLS750.. 69-2454EFS, 69-2455EFS..... 50
PLS751.. 69-2454EFS, 69-2455EFS..... 50
PM7910 .....65-0300 788
POPUP 50-1312 64
PP901 .....77-9243 661
PP902.....77-9243 661
PP903.....77-9234 662
PP904.....77-9275 663
PP905.....75-5537 664
PP97.....77-9233 665
PS120..... 69-2673EFS..... 58, 68
PS240..... 69-2673EFS..... 58, 68
PUB1012..... 63-1328, 63-2685..... 327
PUB4024 ..... 63-1328, 63-2685..... 327
PUB6438 ..... 63-1328, 63-2685..... 327
PUL1012 ..... 63-1328, 63-2685..... 327
PUL4024..... 63-1328, 63-2685..... 327
PUL6438..... 63-1328, 63-2685..... 327
PV075.....63-1378 243
PV100 .....63-1378 243
PV125 .....63-1378 243
PV150 .....63-1378 243
PV200 .....63-1378 243
PVB0000 ..... 63-1328, 63-2685..... 327
PVB4022 ..... 63-1328, 63-2685..... 327
PVB4024 ..... 63-1328, 63-2685..... 327
PVB6436 ..... 63-1328, 63-2685..... 327
PVB6438 ..... 63-1328, 63-2685..... 327
PVL0000..... 63-1328, 63-2685..... 327
PVL4022..... 63-1328, 63-2685..... 327
PVL4024..... 63-1328, 63-2685..... 327
PVL6436..... 63-1328, 63-2685..... 327
PVL6438..... 63-1328, 63-2685..... 327
PVU100 .....63-1378 244
PVU125 .....63-1378 244
PVU150 .....63-1378 244
PVU175 .....63-1378 244
PWT.....63-1327 459

Q

Q100 .....60-2135 ..... 447, 818
Q179A 60-2032 811
Q179B 60-2032 811
Q179C 60-2359 812
Q179D 60-2359 812
Q181 .....60-2124 441
Q209 .....63-2226 441
Q270 869
Q298.....60-2001 447
Q313.....60-2087 126
Q314.....60-2075 129
Q314U ..... 69-2754ES, 69-2755ES, ... 128
69-2756ES, 69-2757ES
Q3200U .....69-2334 .....139, 140
Q327.....60-2075 130
Q340.....60-2087 126
Q345.....68-0094 130
Q3450.....68-0125 131
Q3451U ... 69-2754ES, 69-2755ES, ... 128
69-2756ES, 69-2757ES
Q345U ..... 69-2754ES, 69-2755ES, ... 128
69-2756ES, 69-2757ES
Q347.....60-1018 140
Q348U ..... 69-2754ES, 69-2755ES, ... 128
69-2756ES, 69-2757ES
Q354.....60-0033 140
Q370 127
Q390.....60-2087, 62-3031 126
Q4100 .....34-00005 141
Q5001 .....63-2425 449
Q5020.....63-2552 450
Q5024.....38-00020 ..... 451, 452
Q605.....63-2263 448
Q607.....60-2123 442
Q624.....60-2049 814
Q633.....60-2023 154
Q651.....60-2016 516
Q652.....63-2159 815
Q7002.....63-2551 394
Q7130.....63-2235 443
Q7230.....63-2235 443
Q7330.....63-2235 443
Q769.....63-2463 406
Q7770.....95-7700 337
Q7800.....65-0084 775
Q7999A 65-0240 790
QM4520A 65-0211 793

R

R24 ..... 63-1321ES..... 154
R4222.....60-2056 155
R4225.....60-2165 156
R431767 ..... 95C-10392EFS 567
R7120M 66-1193 773
R7140 .....63-9362 774
R7247 .....95-8270 795
R7248 .....95-8270 795
R7249 .....95-8270 795
R7284B..... 69-2467EFS.....174
R7284U ..... 69-2467EFS.....174
R7476 .....95-8270 795
R7824 .....65-0109 794
R7847 .....65-0109 794
R7848 .....65-0109 794
R7849 .....65-0109 794
R7851 .....65-0109 794
R7852 .....65-0109 794
R7861 .....65-0109 794
R7886 .....65-0109 794
R7910A..... 66-1174..... 784
R7911A ..... 66-1174..... 785
R7999A.....65-0238 789
R8182 .....68-0105 196
R8184G 69-0429 175
R8184M ..... 68-0111.....176
R8222.....60-2056 155
R8225.....60-2165 156
R8228.....60-2056 155
R8229.....60-0761 156
R8239.....60-2023 162
R8246.....60-0581 151
R8285.....68-0088 162
R8330.....60-0327 157
R841 ..... 95C-10090B..... 157
R845.....60-2481 210
R847.....60-2481 209
R856 ..... 60-2171, 60-2481..... 209
R8845U 68-0215 211
RA116 ..... 68-0119 176
RA117 ..... 68-0119 176
RA832.....60-2481 210
RA889A 68-0216 212
RA89.....60-2481 210
RA890F 60-2034 869
RA890G.....60-2035 869
REM1000..... 69-2591EFS..... 23
REM5000..... 69-2054EFS..... 24
RM7800 .....66-2028 ..... 756, 757
RM7823 .....66-2031 758
RM7824 .....65-0155 759
RM7830 .....66-2041 755
RM7838A.....66-1087 760
RM7838B.....66-1094 .....761, 762
RM7838C .....66-1094 .....761, 762
RM7840 .....66-2027 .....763, 764
RM7845 ..... 66-1147 765
RM7850 .....66-2041 755
RM7885 ..... 66-1147 765
RM7888 .....66-2044 766
RM7890.....65-0130, 66-1195 ..... 767, 768
RM7895..... 65-0125, 66-2026..... 769, 868
RM7896 .....66-2026 770
RM7897 ..... 66-1151 771
RM7898 .....66-2026 772
RP418.....95-6046EF..... 671
RP470.....77-9852 673
RP471.....77-9848 674
RP670.....77-9851 675
RP7517.....95-7269 654
RP818 .....95-6046EF..... 671
RP913.....77-9378 676
RP920.....74-5576 658
RP922.....77-5053 677
RP970.....77-9850 678
RP971.....77-9849 679
RP972.....77-9831 680
RP973.....77-9847 681
RP975.....77-9846 682
RRD..... 69-1960ES..... 44

S

S03 .....63-1336 382
S05 .....63-2607 384
S10 .....63-1296 387
S20 .....63-2607 389
S256B.....66-2065 875
S437 .....60-2186 351
S443 .....60-2122 442
S483 26
S637 .....60-2186 351
S688 .....60-2013 79
S702 885
S706 885
S7800 .....65-0090 .....777, 778
S7810A.....65-0091 779
S7810M 65-0249 779
S7820 .....65-0095 780
S7830 .....66-2033, 65-0101 781
S7910 ..... 66-1175 786
S7999 .....65-0315 790
S7999D.....65-0315 787
S802 885
S806 885
S8610U..... 68-0135, 69-0729..... 133
S87 .....68-0039 134
S8910 .....68-0161 135
S8910U.....68-0161 136
S89E.....68-0066 135
S89F.....68-0066 135
S9200U.....69-2075 198
S963 .....60-2122 348
SCV 249
SEC-ENC 95-7747 324

Model Index

SEC-H-6 ..... 74-5081 325
SEC-H-ENT ..... 74-4063 ..... 313, 326
SEC-H-R 95-7749 321
SIO120 ..... 31-00013 332
SIO402 ..... 31-00013 332
SIO604 ..... 31-00013 332
SP470 ..... 95-7236EF 687
SP970 ..... 77-9845 ..... 688, 689
ST7800 ..... 65-0089 782
ST82 ..... 68-0090 158
ST9103 ..... 69-0771B 143
ST9120 ..... 69-2252EF 143
SUB-CS 499
SUB-ENERGY 63-1353 498
SV173 ..... 63-9479 245
SV175 ..... 63-9479 245
SV9501 ..... 69-1270 120
SV9502 ..... 69-1270 120
SV9510 ..... 69-2014 121
SV9520 ..... 69-2014 121
SV9541 ..... 69-2012 122
SV9601 ..... 69-1270 120
SV9602 ..... 69-1270 120
SV9641 ..... 69-2012 122
SymmetrE 63-4515 287

T

T100 ..... EN0H-2018GE25 259
T100R 95C-10712 251
T104 ..... 62-3004 255
T4031A 60-2177 350
T4031C 63-2035 352
T4039 ..... 60-2241 505
T4051 ..... 95-6979 512
T4054 ..... 60-2173 354
T410 ..... 68-0145EF 29
T4398 ..... 69-1604 31
T451 ..... 95C-10903 511
T498 ..... 95C-10686 30
T6031A 60-2177 350
T6031C 63-2035 352
T6031D 63-2035 352
T6031E 63-2035 353
T6051 ..... 63-1093 513
T6052 ..... 63-1093 513
T6054 ..... 60-2173 354
T6069 ..... 95C-10678 506
T6169 ..... 95C-10679 507
T631A 60-2214 355
T631B 60-2214 355
T631C 60-2214 355
T631F 60-2509 356
T631G 60-2509 356
T651 ..... 95C-10903 511
T675A 60-2200 357
T675B 60-2200 357
T675F 60-2213 360
T678A 60-2200 357
T678C 60-2215 361
T678E 60-2215 361
T678F 60-2215 361
T7022A 60-0247 476
T7047 ..... 60-2174 476
T7067 ..... 60-2421 344
T7080 ..... 60-2527 344
T7350 ..... 63-2605, 62-0195 ..... 524, 527
T7351F 63-9630 525
T7560 ..... 74-3097 477
T7650 477
T775A 63-1318 362
T775B 63-1318 362
T775L 63-1318 364
T775M 63-1318 362
T775P 63-1318 364
T775R 63-1318 362
T775S 63-1318 364
T775-SENS 62-0265 478
T775U 63-1318 364
T7771 ..... 63-2617 480
T822 ..... 69-2251EFS 19
T827 ..... 69-2251EFS 20
T834 ..... 69-1944EFS 18
T915 ..... 60-2201 365
T921 ..... 60-2242 517
T991A 60-2196 366
TAXV 62-3081 264
TAZ-4 ..... 69-1366 40
TB6575 ..... 63-1323 508
TB6980 ..... 62-0238 517
TB7100 ..... 63-2675 523
TB7200 ..... 63-2708, 62-2019 ..... 528, 532
TB7220 ..... 63-2635 522
TB7300 ..... 63-2708, 63-2709 ..... 529, 532, 533
TB7305 ..... 63-2708, 63-2709 ..... 529, 532, 533
TB7600 ..... 63-2706, 63-2708 ..... 530, 532, 533
TB7605 ..... 63-2706, 63-2708 ..... 530, 532, 533
TB7652 ..... 63-2706, 63-2708 ..... 530, 532, 533
TB7656 ..... 63-2706, 63-2708 ..... 530, 532, 533
TB7980 ..... 62-0238 517
TB8575 ..... 63-1323 508
TB-WALL 63-2712 480
TD-090 248
TD-165 248
TG510 ..... 68-0104 33
TG511 ..... 68-0104 34
TG512 ..... 68-0104 35
TH1100DH 69-1971EFS, 69-2607EFS 16
TH1100DV 69-2607EFS 17
TH1110DH 69-1971EFS, 69-2607EFS 16
TH1110DV 69-2607EFS 17
TH115-A 69-1804EFS 27
TH1210DH 69-1971EFS, 69-2607EFS 16
TH1210DV 69-2607EFS 17
TH2110DH 69-2608EFS, 69-1969EFS 10
TH2110DV 69-1969EFS 11
TH2210DH 69-2608EFS, 69-1969EFS 10
TH2210DV 69-1969EFS 11
TH3110D 69-1776EFS 15
TH3210D 69-1776EFS 15
TH4110D 69-1760EFS, 69-1773EF 10
TH4210D 69-1760EFS, 69-1773EF 10
TH5110D 69-1923EFS 14
TH5220D 69-1923EFS 14
TH5320C 69-2019EFS 15
TH5320R 69-2090EFS 12
TH5320U 69-1923EFS 14
TH6110D 69-1778EF 9
TH6220D 69-1778EF 9
TH6320R 69-2090EFS 6
TH6320U 69-1778EF 9
TH6320WF 69-2736EFS 8
TH7220U ..... 69-2667ES 5, 521
TH8110R ..... 33-00016 ..... 4, 520
TH8320R ..... 33-00016 ..... 4, 520
TH8321R ..... 33-00016 ..... 4, 520
TH8321WF ..... 33-00096 ..... 2, 518
TH8732WF 33-00031EF 1
TH9320WF ..... 69-2814EFS 2, 518
TH9320WFV 33-00018EFS 1
THM4000 ..... 69-2313EFS 24
THM5320 ..... 69-2091EFS 8
THM5421 ..... 68-0311, 68-0312 ..... 5, 521
THM6000 ..... 69-2567EFS 22
THP2400 ..... 33-00069EFS 37
THX9421R ..... 68-0311 ..... 3, 519
TI035 ..... 400-035-001 51
TI040 ..... 400-040-001 51
TI044 ..... 400-044-001 52
TK300 ..... 62-3080 249
TL116A 69-2525EFS 27
TL7235 ..... 69-1802 28
TL8100 ..... 69-2017EFS 28
TL8130 ..... 69-1804EFS 27
TL8230 ..... 69-1804EFS 27
TLM1110 ..... 69-2472EF, 69-2474EFS 32
TP9600 ..... 74-5594, 95-7549 ..... 643, 650
TP970 ..... 77-1003, 85-0211 ..... 644, 650
TP971 ..... 77-9824 646
TP972 ..... 77-9825 647
TP973 ..... 77-9826, 95-7500 648
TP974 ..... 77-9827 670
TP975 ..... 95-7152 649
TR20 ..... 63-1321 483
TR21 ..... 62-0291, 63-1321 ..... 481, 484, 485, 486
TR22 ..... 63-1321 481
TR23 ..... 62-0291, 63-1321 ..... 481, 484, 485, 486
TR24 ..... 63-1321 481
TR29 ..... 63-1321 481
TR40 ..... 63-1389 488
TR42 ..... 63-1389 488
TR70 ..... 63-1322 487
TR71 ..... 63-1322 487
TR75 ..... 63-1322 489
TRN 68-3070 66
TX 277
TX300 ..... 62-3080 250
TX30PV 250
TX60PV 250

U

U2-1010 ..... 66-2071EP 876
U2-1012 ..... 66-2071EP 876
U2-1016 ..... 66-2071EP 876
U2-1018 ..... 66-2071EP 876
UC100 ..... 69-1444 86
UC18 ..... 69-1444 86
UC36 ..... 69-1444 86
UEC24014 666
UV100 85
UV2400 ..... 68-3104EFS 83, 84

V

V110 ..... 62-3004 252
V135 ..... 95C-10711 251
V200 ..... 62-3056 257
V2040 ..... 62-3056 257

V2042 ..... 62-3056 256
V2042H..... 62-3056 261
V2043 ..... 62-3056 256
V2043H..... 62-3056 261
V400 ..... 95-6996 99
V4043A..... 60-2133 218
V4043B..... 60-2133 218
V4043E..... 60-2133 220
V4043J 60-2133 220
V4044A..... 60-2133 221
V4044B..... 60-2133 221
V4046A..... 60-2145 178
V4046B..... 60-2145 178
V4046C..... 66-2008 845
V4055A..... 60-2307, 60-2309 ..... 830, 831
V4055B..... 60-2307, 60-2309 ..... 830, 831
V4055D..... 60-2307, 60-2309 ..... 830, 831
V4055E..... 60-2307, 60-2309 ..... 830, 831
V4055F ..... 60-2307, 65-0029 ..... 830, 833
V4055G ..... 60-2307, 65-0029 ..... 830, 833
V4062 ..... 60-2099, 60-2307 ..... 830, 834
V4295 ..... 63-9339 846
V4297A..... 65-0246 849
V4297S..... 65-0244 850
V4730C..... 65-0282 ..... 851, 853
V4734C..... 65-0282 ..... 851, 853
V48A..... 60-2080 819
V48J 60-2080 821
V4943A..... 65-0212 822
V4943B..... 65-0212 823
V4943C..... 65-0212 823
V4943N..... 65-0212 823
V4944B..... 65-0214 825
V4944C..... 65-0214 825
V4944L 65-0214 825
V4944N..... 65-0214 825
V5011A 60-2126 554
V5011B 60-2126 554
V5011F..... 60-2126 563
V5011G 60-2126 563
V5011N 63-1276 564
V5013B 60-2129 559
V5013C 60-2129 559
V5013N 63-1277 565
V5051A..... 60-2130 569
V5055 ..... 60-2307 ..... 830, 837, 844
V5097 ..... 60-2307, 65-0230 ..... 830, 842, 844
V51 ..... 60-2102 828
V5197 ..... 65-0247 829
V5852 ..... 62-0100 570
V5853 ..... 62-0100 572
V5862 ..... 62-0100 570
V5863 ..... 62-0100 572
V800 ..... 95-6996 99
V8043A..... 60-2133 ..... 222, 228
V8043B..... 60-2133 227
V8043C..... 60-2133 224
V8043D..... 60-2133 227
V8043E..... 60-2133 ..... 222, 228
V8043F ..... 60-2133 ..... 222, 228
V8043G ..... 60-2133 ..... 224, 229
V8043J 60-2133 226
V8044A..... 60-2133 230
V8044E..... 60-2133 230
V8046C..... 66-2008 845
V8295 ..... 63-9339 846
V8730C..... 65-0282 ..... 851, 853
V88A..... 60-2080 819
V88J 60-2080 821
V8943A..... 65-0212 822
V8943B..... 65-0212 823
V8944B..... 65-0214 825
V8944C..... 65-0214 825
V8944L 65-0214 825
V8944N..... 65-0214 825
V9055 ..... 60-2307, 60-2311 ..... 830, 835
VBF2..... 62-3078 ..... 540, 549
VBF3..... 62-3078 ..... 541, 549
VBF5011 ..... 62-3117 586
VBF5013 ..... 62-3117 586
VBN2 ..... 62-3077 ..... 543, 549, 550
VBN3 ..... 62-3077 ..... 546, 549, 550
VC2114 589
VC4012 589
VC4611 589
VC6831..... 95C-10828 ..... 215, 217
VC6834..... 95C-10828 ..... 215, 217, 590
VC6931..... 95C-10828 590
VC6936..... 95C-10909, 95C-10904 .. 581, 582, 591
VC7931..... 95C-10828 590
VC7934..... 95C-10828 590
VC7936..... 95C-10909, 95C-10904 .. 581, 582, 591
VC8111..... 589
VC8710 589
VC8711 589
VC8714 ..... 216, 589
VC8715 ..... 216, 589
VCZA ..... 95C-10948 ..... 216, 217, 575
VCZB ..... 95C-10948 ..... 216, 217, 575
VCZM..... 95C-10828, 95C-10948 ... 215, 578
VCZN ..... 95C-10828, 95C-10948 ... 215, 578
VCZZ 95C-10919 583
Venturi Mixing Unit. 65-0282 844
VF06 ..... 33-00022 247
VFF1..... 63-2661 551
VFF2..... 63-2661 551
VFF3..... 63-2661 552
VFF6..... 63-2661 552
VGF2 ..... 63-9236, 95C-10392EFS .. 555, 557, 567
VGF3 ..... 63-9236, 95C-10392EFS .. 560, 567
VMU..... 65-0282 854
VNT5070 ..... 69-2480EF 87
VNT5150 ..... 69-2480EF 87
VNT5200 ..... 69-2480EF 87
VNT6150 ..... 69-2480EF 87
VNT6200 ..... 69-2480EF 87
VP512..... 95-1785EF 707
VP513..... 77-5219, 75-1707 709
VP519..... 75-2510 711
VP522..... 77-5230, 75-2598 712
VP525C 77-5260EF 714
VP526..... 77-5246 716
VP527..... 77-5262 718
VP531C 75-7251EF 719
VR4300..... 69-0683 105
VR4304..... 69-0838 109
VR4305..... 69-0696 112
VR8200..... 68-0046 103
VR8204..... 68-0047 107
VR8205..... 68-0049 111
VR8215..... 34-00006EF 114
VR8245..... 69-2013 115
VR8300..... 69-0683 105
VR8304..... 69-0838 109
VR8305..... 69-0696 112
VR8345..... 69-2013 115
VR9205..... 69-2143 117
VRN2 ..... 62-3115 ..... 534, 537
VRW2 ..... 62-3116 538
VS1200 262
VS820 ..... 95C-10024B 101
VU443..... 95C-10885 592
VU444..... 95C-10885 592
VU52..... 95C-10884 584
VU53..... 95C-10884 584
VU54..... 95C-10884 585
VU843..... 95C-10885 592
VU844..... 95C-10885 592

W

W7080 ..... 63-4179 345
W7081 ..... 60-2512 345
W7100A..... 60-2507 346
W7100G..... 63-4046 347
W7220 ..... 63-2700 403
W7220-PCMOD.... 62-0409 404
W7251B..... 404
W7350A..... 62-0270 334
W7750 ..... 74-2956 339
W7751 ..... 74-2940, 74-2942 340
W7751F 74-2942 343
W7752 ..... 74-2959 341
W7753 ..... 74-2962 341
W7760A..... 74-2967 338
W7760B..... 74-3472, 95-7668 343
W7760C..... 74-3080, 95-7611 338
W7761 ..... 74-2698 342
W7762 ..... 74-2934 342
W7763 ..... 74-2934 342
W8150 ..... 68-0282 96
W8735ER 66-1202 195
W8735S..... 66-1202 195
W8735Y..... 66-1202 195
W9076 ..... 63-2093 347
W973 ..... 60-2428 348
WATCHDOGIII..... 32-00034 874
WEB-201 ..... 74-4035 ..... 305, 306
WEB-300E..... 31-00009 306
WEB-403 ..... 74-4027 310
WEB-545 ..... 74-4027 310
WEB-600 ..... 74-4035 ..... 305, 306
WEB-600E.... 63-2736, 74-4035..... 304, 305
WEB-603 ..... 63-2734, 63-2733 309
WEB-645 ..... 63-2734, 63-2733 309
WEB-700 ..... 74-5093 307
WEB-S-AX..... 74-4063 313
WRECVR..... 62-0291 486
WSK-24 ..... 62-0300 510
WWS-VL1 ..... 74-5087 334

X

XCL801 ..... 63-1326 289
XF82 ..... 63-1326 289
XFC3 292
XFL82 290
XFLR82 290
XI582B..... 293
XIO 74-4043 292
XL100 ..... 95-2035 291
XL50 ..... 74-3668 291
XPS 62-3080 265

Model Index

Y

Y496 231
Y7220 ..... 63-2700 403
Y7751F 74-2942 343
Y8150 ..... 68-0282 96
Y8610U 68-0133 136
YCLB6438S 63-1388 335
YL7220 ..... 63-2700 403
YTA7210 .. 69-2472EF, 69-2474EFS 32
YTH5320R ..... 69-2054EFS, 69-2094EFS 7, 13, 21
YTH6320R ..... 69-2054EFS, 69-2094EFS 7, 13, 21
YTH6320R 69-2054EFS, 69-2094EFS 21
YTH8320ZW 69-2485EFS 6
YTH8321R 33-00016 4
YTHM5421R 68-0312 5
YTHX9421R ..... 68-0311 ..... 3, 519
YTL9160A 69-2472EF, 69-2474EFS 32

Z

ZDTZ 33-00079EFS 45
ZL7762 ..... 74-3960 337
ZM7999A 65-0242 792

Numerics

1-channel Signal Processors 875
2-channel and Keypad Signal Processors 874
3-channel Signal Processors 873
7-Day Programmable Line Voltage Thermostat 27
7-Day Touchscreen Programmable Thermostat 5, 521

A

Accessories
- AQUATROL 207
- ControLinks 792
- Direct Coupled Actuators 395
- Electrode Humidifier 73
- Electronic Air Cleaners 55
- Excel Controllers 295
- Flame Detectors 810
- Gas Controls 124
- Gas Ignition Modules 138
- Globe Valve 566
- Humidifiers 76
- Ignition Transformers 816
- Industrial Flame Monitoring 877
- Kit Mounted Motors 446
- Legacy Building Systems 348
- Linkages 452
- LonWorks Bus 294
- Media Air Cleaners 63
- Meters 498
- Microprocessor Burner Controls 783
- Mixing Valves 269
- Modutrol IV Motors 439
- Pneumatic 724
- Pneumatic Controllers 660, 666
- Pneumatic Damper Actuator 699
- Pneumatic Sensors 670
- Pneumatic Thermostats 651
- Pneumatic Valve Actuators 706
- Pneumatic Valves 721
- Pressure and Limit Controllers 867
- Pressure Regulating Valves 280
- RedLINK Enabled Thermostats 22
- Remote Bulb 368
- SmartVFD 618
- Spyder Controllers 330
- STEAM 74
- Thermostatic Radiator Valves 262
- Thermostats 36, 526, 532
- TrueDRY 72
- TrueEASE 75
- Valve Actuator 599
- Ventilation Systems 95
- VFD 636
- Water Filters 284
- WEBs-AX 305, 314
- Zone Control 41, 48

Actuators
- Cartridge Cage Valve 589
- Cartridge Globe Valve 587
- Commercial Direct Coupled 374
- Direct Coupled 791
- Fan Coil 592
- Fluid Power 830
- Gas Valve 830
- Parallel-Positioning 791
- Pneumatic Damper 690
- Pneumatic Valve 701
- Thermostatic Radiator 255

Add-a-Temperature Injection/Mixing Expansion Control Panel for Hydronic Zoning System 204
Adjustable Sensitivity Ultraviolet Flame Detector 806
AirBRIGHT™ Odor Absorption 83
Air Cleaners
- High Efficiency Electronic 53
- High Efficiency Media 59
- Media with MERV 11 Filter 61

Air Eliminators 243
Airflow Differential Pressure Switch 142
Air Pressure Switch, CLEPAS 683
Air Purger 242
Air Purifiers 83
Airstream Insertion Pneumatic Thermostat 640
Air Valve, Two-Position Three-Way 711
Air Vents and Eliminators 239–246
All-in-One Viewing Head and Processor 876
Ambistat Controller 352
Approval Bodies xix
AquaPUMP Hydronic Circulating Pump 237
Aquastat Controllers 182–197
AQUATROL Zoning System 199–208
Authorized Distributors xxvi
Automatic Air Vent for Heating System 241
Automatic Air Vent for Non-Heating System 240
Automatic Backwash Control 284
Automatic Primary Control with Programmable Post-Purge 771
Automatic Round Damper (ARD) 43
Auxiliary Switches 151
Auxiliary Switches for Modutrol Motors 442
Averaging Duct Temperature Sensors 471
Averaging Relay, Pneumatic 681

B

Backflow Preventers with Intermediate Atmospheric Vent 246
Bath Fan Control 97
Boiler Control Panel for Hydronic Zoning 200
Boiler Fill Valves 247
Boiler Trim Kit with Air Purger 250
Boiler Trim Kit with SuperVent 250
Building Automation Appliances 333–334
Building Automation Systems
- Excel 5000 285
- Legacy 345
- Light Commercial 336
- Security 317
- WEBs-AX 299

Building Management, SymmetrE 287
Burner Control Modernization and Replacement 868
Burner Controls, Electromechanical 869
Burner Controls, Microprocessor 754–783
Burner Control Testers 870
Butterfly Control Valves 551–553
Butterfly Gas Valves 828–829
Butterfly Valve Linkages, Modutrol 818
Bypass Dampers 42
Bypass Humidifiers 77

C

Cadmium Sulfide Flame Detector 177
Cage Valves 569
- Cartridge 575

Capacity Relay, Pneumatic 678
Carbon Dioxide (CO2) Sensors 453–454
Cartridge Cage 3-way Mixing Valves 215
Cartridge Cage Valve Actuators 589–591
Cartridge Cage Valves 575–583
Cartridge Globe Valve Actuators 587–588
Cartridge Globe Valves 570–574
CE Sequence Primary/Programmer Modules 735
Changeover Temperature Controller 361
Circuit Breaker Transformer 166, 167
Class 100 kWh Meter 490
Class 200 kWh Demand Meter 491
Classroom Training 891
CLEPAS Air Pressure Switch 683
Coil Valve Actuators, Pneumatic 701
Combination Aquastat® and High Limit Controller 185
Combination Gas Controls 99–117
- Parts and Accessories 124

Combination Protectorelay® and Hydronic Heating Controllers 196
Commercial Dampers 369–373
Commercial Expansion Tanks 264–265
CommercialPRO® Thermostat 522
Communicating Smart Meter 492
Communicating Thermostats 527–533
Compact I/O Modules 292
Connected Thermostats 1–2
Constant Volume Air Handling Unit Controllers 339
Contactors 144–153
- Selection Guide 152

Control Ball Valves 540–550, 586
ControlBus™ Module 779
Control Centers 162–163, 209
ControLinks Fuel Air Control System 789–792
Controllers
- Air Velocity 655
- Aquastat 182
- Commercial 349
- Constant Volume Air Handling 339
- Excel 289, 291, 293
- Excel 15 338
- Fan Coil Unit 341
- High Limit 179, 185
- Humidity 80
- Hydronic 342
- LCBS 338, 343
- Legacy 345
- Lighting 335
- Pneumatic Pressure 661
- Pneumatic Temperature 657
- Pressure and Limit 859
- Pressuretrol 859, 864
- Protectorelay and Hydronic Heating 196
- RedLINK 23
- Refrigeration 349
- Return Air 354
- SOLA Hydronic 784
- SOLA Steam 785
- Spyder 327
- Stryker 331
- Temperature 352
- TheraPro Electronic Radiator 254
- TrueZONE 38
- Unit Vent 341
- Vaporstat 863
- Variable Air Volume 340
- VAV II 343

Subject Index

Ventilation 96
WEBs-AX 304, 306, 334
WEBs-AX Security 325
WebStat 334
WebVision 334
Controller Tools, Excel 5000 286
Control Panels
Hydronic Zoning 200
Controls
Integrated Furnace 198
Control Valves
Butterfly 551
Pressure Independent 534
Conversion Factors xxii
Conversion of Pressure Units xxi
Crop-Trol Controller 360
Current Sensors 499–504
Current Switches 502
Current Transmitters 500

D

Damper Actuators 48
Direct Couple Actuators 374–402
Economizer 405
Pneumatic 690–700
Damper and Valve Linkages 447–452
Damper Motors 444
Modutrol IV Motors 410–438
Dampers
Commercial 369
MARD 44
RRD 44
TrueZONE Bypass 42
TrueZone Fresh Air 98
Zone Control 43
Data Acquisition Module 793
Data ControlBus™ Module 779
Date Code xx
Day/Night Thermostat, Pneumatic 646
Definite Purpose Contactors 144–150
Dehumidifiers – See
TrueDRY™ Humidification Systems 69
Demonstrators or Trainers, Burner Controls 871
Dew Point Sensor 455
“DialSet” Boiler Fill Valves 247
“DialSet” Low Lead Pressure Regulating Valve 278
Diaphragm Gas Valves 819–827
Differential Pressure Regulators 238
Differential Pressure Switch 666
Differential Pressure Transmitters 458
Diffuser Thermostat, Pneumatic 649
Digital Bath Fan Control 97
Digital Fan Coil Thermostats 508, 529
Digital IAQ Control 80
Digital Temperature Indicator 347
Digital Wall Modules 477
Din-Mon (HD2 or HD5) Submeters 497
DirectConnect™ Thermostatic Mixing Valves 271
Direct Coupled Actuators 374–402
Fire and Smoke 391
Non-Spring Return 374
Spring Return 382
Direct Coupled Actuator, Universal 791
Direct Coupled Globe Valve Actuators
Non-Spring Return 594
Spring Return 596
Direct Coupled Linear Valve Actuators 597
Direct Coupled Valve Actuators 594–599
Direct Ignition Gas Controls
24 Vac 2-Stage 117
Dual Automatic Valve 111, 114
Line Voltage 112
Low Voltage 112, 115
SmartValve 121
Direct Ignition SmartValve® System 121
Direct Spark Igniter 140
Direct Spark Ignition Modules 134
Direct Spark Sensor 140
Discharge Air Temperature Controller 346
Discharge Air Temperature Sensors 471
Discharge Water Temperature Controller 347
Distributed I/O, Excel 290
Distributors xxvi
Diverting Switches, Pneumatic 687
Diverting Valves 275
Line Voltage 221
Low Voltage 230
Domestic Hot Water Priority 195
Drives 619
Drives with Bypass and/or Disconnect 622
Dual Protocol Smart Meter 494
Duct Probes 473, 475
DVD/Videotapes, Training 887
Dynamic Self-Check Ultraviolet Flame Detector 804, 808

E

EAC Media Post Filter 68
EARD TrueZone Fresh Air Damper 43
Early-Warning Dew-Point Switch 455
EConnect™ Wireless Line Volt Thermostat 32
Economizer Damper Actuators 405–406
Economizer Logic Modules 403–404
Economizer Sensors 407–409
Economy Definite Purpose Contactors 150
EconoSwitch™ Programmable Wall Switches 49
EC Timings
Primary Control 754
Programming Control 755
Electric Furnace Sequencer 157
Electric Heat Contactor 151
Electric Heating Relay 156, 157
Electric Heat Sequencer Selection Guide 160–161
Electric Heat Thermostats 27–32
High Performance 31
Electric/Pneumatic Relay 671
Electrode Humidifier 73
Electromechanical Burner Controls 869
Electronic Air Cleaners 53–58
Electronic Boiler Reset Control Panel for Hydronic Zoning System 202
Electronic Dual Setpoint Thermostat 344
Electronic Fan Timers 143
Electronic Ignition Gas Controls 115
Electronic Relay Boiler Control Panel for Hydronic Zoning System 200
Electronic Temperature Sensors 466
Energy Software 498
Enthalpy Sensors 408
Equipment Interface Modules
FocusPRO 8
Prestige IAQ 5, 521
Excel 15 Controller 338, 343
Excel 50 Controllers 291
Excel 100 Controller 291
Excel 800 Controller 289
Excel 5000 System 285–298
Excel Controller Accessories 295
Excel Distributed I/O 290
Excel Operator Terminals 293
Excel Smart I/O Modules 292
Excel Web II Control System 293
Expanded Annunciator, First Out 781
Expansion Panels
Hydronic Zoning 205
Expansion Tanks
Commercial 264
Domestic Hot Water 277
Residential 249

F

Fail Safe Proportional Actuators 591
Fan and Limit Controllers 179–181
Fan Centers 162–163
Fan Coil Actuators 592–593
Fan Coil Thermostats 505–509
Fan Coil Unit Controllers 341
Fan Coil Valves 584–585
Fan Manager 158
Fan Relay 156
Fan Timers
Electronic 143
Farm Controllers 355, 360
Fast-Acting, Two-Position Actuators 391
Fiberoptic System, Flame Detection 881
Filters
Electronic Air Cleaners 55, 68
Humidifiers 78
Media Air Cleaners 63
Ventilation Systems 95
Water 282
Fireye M Series Replacement Control 773
Firing Rate Motors and Linkages 817
First Out Expanded Annunciator 781
Flame Amplifiers 794–795
Flame Detectors 177, 798–810, 886
Flame Detector System 885
Flame Rectifier Gas Pilots 811–813
Flame Rods and Flame Rod Holders 796–797
Flame Rod Signal Processor 873
Flame Safeguard Textbook 892
Flame Simulators 872
Flame Switch 758
Flame Tool 877
Flanged Control Ball Valves 540
Flanged Globe Valves 554–562
Flanged Pressure Independent Control Valves 538
Flare Stack Signal Processor, WATCHDOGIII 874
Flare Stack Viewing Head 875
Floating Control Modutrol IV™ Motors 416
Fluid Power Actuators 830
Flush Mount Sensors 474
FocusPRO® 5000 Digital Non-Programmable Thermostats 14
FocusPRO® 5000 Wireless Thermostat 12
FocusPRO® 6000 5-1-1 Day Programmable Thermostat 9
FocusPRO® 6000 Wireless Thermostat 6
FocusPRO® Communicating Thermostats 15
FocusPRO Equipment Interface Module 8

Freeze Warning Device 26
Fresh Air Ventilation System 96
FSG Textbook 892
Fuel Air Controller, ControLinks 789
Fuel Air Control Wiring Subbase, ControLinks 790
Furnace Controls, Integrated 198

G

Gas Capacities xxi
Gas Controls
  Direct Ignition 111–117
  Intermittent Pilot 107–110, 115
  SmartValve System 120–123
  Standing Pilot 99–106
Gas Ignition Module Accessories 138
Gas Pressure Switches, 2000 Series 855
Gas Valve Actuators 830–836
Gas Valves
  Butterfly 828
  Diaphragm 819
  Industrial 837
  Pilot 845
  Servo Regulated 851
  Solenoid 846
Gas Valve Selection Guide 118–119
Gauges
  Pneumatic 723
General Purpose Transformer 164
General Purpose Transformer for Hydronic Heating Controls 213
GHE Igniter System 883
Globe Valve Linkages 450
Globe Valves
  Cartridge 570
  Flanged 554
  Threaded 563
Glowfly™ Universal Hot Surface Igniter Kit 140
GoldTop™—Universal Air Vent 242

H

Heating/Cooling Thermostat, Pneumatic 647
Heat Sequencer 154
Heavy Duty Relay 209
HEPA Media Air Cleaner Filters 66
Hesitation Relay, Pneumatic 682
High Capacity Thermostatic Radiator Valve Actuators 255
High Capacity Thermostatic Radiator Valves 252
High Efficiency Electronic Air Cleaner 53–56
High Efficiency Media Air Cleaner 59–60
High Limit Controller 179
High Temperature Diaphragm Gas Valves 821
Honeywell Authorized Distributors xxvi
Horsepower Ratings xx
Hot Surface Igniters 140–141
Hot Surface Ignition Module, Universal 135
Humidification Systems
  Electrode Humidifier 73
  TrueDRY™ 69
Humidifier Replacement Pads and Filters 78
Humidifier Replacement Parts 76
Humidifiers
  Bypass 75, 77
  Electrode 73
  Fan-powered 75
  Steam 73
  TrueEASE™ 75
HumidiPRO™ Digital Humidity Control 80
Humidistat/Dehumidistat 81
Humidistats, Pneumatic 637
Humidity and Temperature Transmitters 456
Humidity Controllers 80–82
Humidity Sensor for Economizers 409
Humidity Sensor, Pneumatic 667
Humidity Sensors 456–457
Hydronic Circulating Pumps, AquaPUMP™ 237
Hydronic Controllers 342
Hydronic Controls, Aquatrol 199
Hydronic Control, SOLA 784
Hydronic Switching Relays 209–212

I

IFM Accessories 877–884
Igniter Bracket Replacement Cross Reference 139
Igniters and Sensors 140–141
Ignition Pilot Modules 133–138
  Selection Guide 137
Ignition Transformers 814–816
Immersion Sensor 472
Industrial Air Vents 239
Industrial Gas Valves 837–844
  Actuators 830
Industrial Indoor and Outdoor Timers 51
Infrared Flame Detector 809
Integrated Furnace Controls 198
Integrated Valve Train 842
  Butterfly Gas Valve 829
  Normally Open Vent Valve 850
  Pipe Adapters 844
  Safety Shut-off Valve 849
Interface Modules
  Comfort System Equipment 521
  Direct Coupled Actuators 394
  Economizer 394
  Modutrol IV Motors 443
  PC to Economizer 404
Intermittent Pilot Burner 130
Intermittent Pilot Gas Burner Ignition Systems, Universal Retrofit 136
Intermittent Pilot Gas Controls
  Dual Automatic Valve 107
  Line Voltage 109
  Low Voltage 109
  SmartValve 120, 122
Intermittent Pilot Module, Universal 133
Intermittent Pilot SmartValve® System 120
Intermittent Pilot with air control SmartValve® System 122
Internal Auxiliary Switch Kits 440
Internal Transformers 440
International Controls xx
Interrupted Electronic Oil Primary 174
Interval Data Recorder 496
I/O Device, Echelon 342
I/O Modules 292
  Excel 290
  Sylk/Spyder 332
  WEBs-AX 321
ISO 9001:2008 Registration xvii
ISO UNIT 877

J

JADE™ Economizer Module 403

K

Keyboard Display Module, Burner Control 777
Keyboard Display Module for VP Programming 778
Keyboard Display, SOLA 786
Kit Mounted Motors 444–446
kWh Demand Meter 491
kWh Meter 490

L

Lab Trainers 895–896
Large Flow Proportional Mixing or Diverting Valve 275
LCD Wall Modules 487
Legacy Building Systems 345–346
Light Commercial Building Systems 336–344
Lighting Controllers 335
Limit Controller 345
Linear/Modulating Cartridge Cage 2-way Zone Valve 217
Line Voltage Pressure Controller 866
Line Volt Electric Heating Thermostat 27
LineVoltPRO® 7000 Digital Non-Programmable Electric Heat Thermostats 28
LineVoltPRO® 8000 7-Day Programmable Hydronic Thermostat 28
Line Volt Thermostats 511–516
Linkages
  Damper 447–448
  Economizer Motors 447
  Globe Valve 450
  Modutrol Motors 447
Load Analyzer 345
  Pneumatic 676
Logic Panel for Temperature Control 348
LonStation Software 337
LonWorks Bus Accessories 294
LonWorks Bus Interface 337
Low-Leakage, Single-Blade, Round Dampers 372
Lyric™ Thermostat 1
Lyric™ Water Leak and Freeze Detector 281

M

Magnetic Valves 178
Manual Start Industrial Primary Control 765
Manual Start Industrial Primary Control with Purge 760
Manual Start Industrial Programmers, Burner Control 761
Manual Start Industrial Programmers with VPS, Burner Control 762
MaxiVent™ Air Vent 242
Media Air Cleaner Filters 63–68
Media Air Cleaners 59–68
Media Air Cleaner with MERV 11 Filter 61–62
Mercury Free Econo Thermostats 18–20
Meters
  Energy 490
Microprocessor Burner Controls 754–783
Miniature Rectifier Pilots 812
Mini Current Switches 504
Minipeeper Ultraviolet Flame Detectors 802–803
Mixed Air Sensors 407

Subject Index

Mixing Valves 267–276
  Cartridge Cage 215
  Large Flow 275
MMU (Multiple Meter Unit) Cabinet 493
ModBus Module 779
Modulating Automatic Round Dampers (MARD) 44
Modulating Fluid Power Gas Valve Actuators 835
Modutrol IV Motors 410–443, 817
  Order Number Guide 413
Motorized Zone Valves 215–236
Motors
  Control of Dampers or Valves 410
  Kit Mounted 444–447
  Modutrol 817
  Modutrol IV 410–437
  Proportional 431
Multiple Aquastat® Controllers 187
MultiPRO™ Thermostats 523

N

NEMA IV Controllers 356
NEMA Standard Classification xxi
NEMA Standard Transformer 169
NEMA Standard Universal Stripped-Down Transformer 168
Network Interface Communications 793
Non-Programmable Communicating Thermostat 208
Non-Programmable Thermostats 12–20
Non-Spring Return Direct Coupled Actuators 374
Non-Spring Return Direct Coupled Globe Valve Actuators 594
Normally Open Vent Valve for IVT 850
NTC Temperature Sensors 468
NTC Type III Temperature Sensors 463
NTC Type II Temperature Sensors 460, 480
Number System xviii

O

Off-Lo-Hi Fluid Power Gas Valve Actuators 834
Oil Burner Controls
  Protectorelay 175
Oil Electronic Aquastat Controller 189
Oil Pressuretrol® Limit Controllers 861
Oil Primaries 173–176
OmniProx Card Readers 323
One-pipe Steam Thermostatic Radiator Valve 261
On/Off Diaphragm Gas Valves 822
On-Off Fluid Power Gas Valve Actuator 831
On-Off Primary Control, Burner Control 759, 768
On-Off Primary Control with Pre- and Post-Purge 770
On-Off Primary Control with Prepurge, Burner Control 769, 868
On-Off Primary Control with VPS, Burner Control 767, 772
Operator Interface
  ControLinks 790
  Excel 293
  SOLA 787
  WEBs-AX 311
Option Cards
  WEBs-AX 320
Ordering Information 897
Order Specification Number System xviii
Outdoor Reset and Domestic Hot Water Priority 195
Outdoor Sensor 25

P

Parallel-Positioning Actuator, Universal 791
PC Interface Module 404
Perfect Fit Media Air Cleaner Filter 66
Pilot Burners 128–132, 811–813
  Parts and Accessories 132
Plant Controller, Programmable 308
Plate-Mounted Relay Receptacle 154
PLC Adaptable Primary Control 766
Plug In Purge Timer 782
Pneumatic Damper Actuators 690–700
  Torque Ratings 690
Pneumatic Definitions and Abbreviations 731–733
Pneumatic Gauges 723
Pneumatic Humidistats 637–639
Pneumatic Humidity Sensors 667
Pneumatic Pressure Controllers 661–666
Pneumatic Relays 671–682
Pneumatic Switches 683–689
Pneumatic Temperature Controllers 657–660
Pneumatic Temperature Sensors 668–670
Pneumatic Thermostats 640–653
Pneumatic Transducers 654
Pneumatic Valve Actuators 701–706
Pneumatic Valves 707–722
Pneumatic Velocity Sensors/ Controllers 655–656
POPUP Media Air Cleaner Filter 64
Portable Comfort Control 24
Position Switches, Pneumatic 688
Potentiometer, Pneumatic 677
Potentiometers for Modutrol Motors 441
PowerPro Definite Purpose Contactors 144–149
Power Supplies
  Residential Air Cleaners 58, 68
Pressure and Limit Controllers 859–867
Pressure Balanced Flanged Globe Valves 557
Pressure Controllers, Pneumatic 661
Pressure Independent Control Valves 534–539
Pressure Reducing Valves 661
Pressure Regulating Valves 278–280
  Single Stage 823
  Two Stage 825
Pressure Sensors 458–459
Pressure Switches 855–858
  Residential Combustion 142
Pressuretrol® Controllers 859
Pressuretrol, Pneumatic Differential 662
Prestige 2-Wire IAQ Equipment Interface Module 5, 521
Prestige® 2-Wire IAQ Thermostat 3, 519
Primary Control
  Automatic with Programmable Post-Purge 771
  EC Timings 754
  Fireye 773
  Manual Start Industrial 765
  Manual Start Industrial with Purge 760
  On-Off 759, 768
  On-Off with Pre- and Post-Purge 770
  On-Off with Prepurge 769, 868
  On-Off with VPS 767, 772
  PLC Adaptable 766
  Protectorelay 869
Primary Control, Burner Control 759
Primary/Programmer Relay Modules 735
PRO 1000 Horizontal Non-Programmable Thermostats 16
PRO 1000 Vertical Non-Programmable Thermostats 17
PRO 2000 Horizontal Programmable Thermostats 10
PRO 2000 Vertical Programmable Thermostats 11
PRO 3000 Non-Programmable Thermostats 15
PRO 4000 5-2 Day Programmable Thermostat 10
Product Selection Matrix
  Relay Modules, CE Sequence 735–753
Programmable Commercial Thermostats 518–527
Programmable Heat/Cool Thermostat 208
Programmable Plant Controller 308
Programmable Relay Control Panel for Hydronic Zoning System 201
Programmable Thermostats 3–11
Programmable WiFi FocusPRO® Thermostat 8
Programmed Instruction Books 889
Programmers, Burner Control 756, 763, 765, 774
  Manual Start Industrial 761
Programmers with VPS, Burner Control 757, 764
  Manual Start Industrial 762
Programming Control
  EC Timings 755
Programming Tools
  CARE 286
Program Module, SOLA 788
Properties of Saturated Steam xxv
Proportional Actuators 590
Proportional Motors 431
Proportional Pressuretrol® Controllers 864
Proportional Temperature Controllers 365
Proportional Thermostats 517
Protectorelay® Oil Burner Control 175
Protectorelay™ Primary Control 869
Pumps
  Circulating 237
Purge Timer 782
Purple Peeper® Flame Detectors 798

Q

QuickFit® Zone Valves for Canada 229
QuickFit® Zone Valves, Low Voltage 228
Quick Open Cartridge Cage 2-way Zone Valve 216

R

Radiator Valve, Pneumatic 714
Radiator Valve, Thermostatic 251–263
RapidLink Device 337
Ratio Relay, Pneumatic 679
Readers and Keypads
  OmniProx™ 323
  Smartkey Instrusion 324
Rectangular Dampers 45, 369
Rectangular Volume Control Dampers 370
Rectifier Pilots 811–813

RedLINK
Accessories 22
AquaReset 195
Internet Gateway 22
Portable Comfort Control 24
Remote 23
Sensors 22
Thermostats 3, 12, 519
Wireless Adapter 24
RedLINK Technology Thermostats 520
RedLINK™ Accessories 22–24
RedLINK Wireless Entry/Exit Remote 23
Reference Manuals 893–894
Refrigeration Controllers 349–350
Relay Modules
Product Selection Matrix 735–753
Purge Timer 782
Relay Receptacle, Plate-Mounted 154
Relays
Aquastat 192
Electric/Pneumatic 671
Heavy Duty 209
Pneumatic Averaging 681
Pneumatic Capacity 678
Pneumatic Hesitation 682
Pneumatic Ratio 679
Pneumatic Reversing 680
Pneumatic Selector 673
Pneumatic Switching 675
Residential Combustion 154–159
Snap Acting Pneumatic 674
Switching 155
Triple Aquastat 190
Relays, Hydronic Switching 209
Relays, Pneumatic 671–682
Remote Bulb Controllers 184, 357, 361, 365
Remote Bulb Temperature Controllers 657
Remote Indoor Sensor 25
Remote Input/Output Device 342
Remote Reset Module 780
Remote Temperature Controllers 362
Remote Temperature Sensors 476
Remote, Wireless Entry/Exit 23
Replacement Boards, WEBs-AX 310
Replacement Control Modules, AQUATROL 206
Replacement Lamps
Ultraviolet Air Treatment System 86
Replacement Parts
AQUATROL 207
Burner Control Testers 870
Bypass Dampers 42
Cartridge Cage Valve 583
Cartridge Globe Valve 574
Control Ball Valves 549
Control Valves 537
Electrode Humidifier 73
Electronic Air Cleaners 55
Flame Detectors 810
Gas Controls 124
Gas Valves 827, 844, 853
Humidifiers 76
Kit Mounted Motors 446
Media Air Cleaners 63
Microprocessor Burner Controls 783
Mixing Valves 270, 274, 276
Pilot Burners, Residential 132
Pneumatic Damper Actuator 699
Pneumatic Thermostats 651
Pneumatic Valve Actuators 706
Pneumatic Valves 722
Pressure Regulating Valves 279
Relays 158
STEAM 74
Thermostat Guard Keys 35
Thermostats 36
TrueDRY 72
TrueEASE 75
Ventilation Systems 95
VFD 636
Water Filters 284
Zone Valves 232, 236
Replacement Zoning Modules, AQUATROL 206
Residential Air Cleaner POPUP Replacement Media Filter 64
Residential Air Cleaner Replacement Media Filter 63
Residential Air Cleaners Replacement Power Supply 58, 68
Residential Expansion Tanks 249–250, 277
Residential Heating Valves and Actuators 214
Residential Switches and Timers 49–52
Retrofit Round Damper (RRD) 44
Return Air Controller 354
Return Air Sensor 25
Return Air Temperature Sensor 476
Return Grille Media Air Cleaner Filter 65
Reverse Osmosis
Water Filter System 74
Reversing Relay, Pneumatic 680
Reversing Rinsing Filter 282
Rotary Actuator 214
Round Dampers 42–44, 372

S

Safety Shut-off Gas Valve Actuators, Manual Reset 833
Safety Shut-off Gas Valves 842
Safety Switches 855
Sail Switches 79, 351
Saturated Steam Properties xxv
Security Controllers, WEBs-AX 325
Security Modules, WEBs-AX 321
Selectable Temperature Sensor 409
Selector Relay, Pneumatic 673
Self-Checking Flame Detectors 800, 804, 808
Sensors
Carbon Dioxide 453
Current 499
Dew-Point 455
Differential Pressure 458
Economizer 407
Enthalpy 408
Humidity 456
Mixed Air 407
Outdoor 25
PIR 510
Pneumatic Humidity 667
Pneumatic Temperature 668
Pressure 458
RedLINK 22, 25
Static Pressure 664
Temperature 460
Thermostat and Zoning 25
VisionPRO 25
Sequencing Water Valve, Pneumatic 712
Series Designations xviii
Service Check Valves 249
Service Publications 890
Servo Regulated Gas Valves 851–853
Signal Adapters
Economizer 406
Signal Processors 873–875
Silicon Carbide Hot Surface Igniter 141
Smartkey Intrusion Keypad/Display 324
Smart Meter 492
Smartphone-Controlled Thermostats – See Connected Thermostats 1
SmartValve® Control Systems Selection Guide 123
SmartValve® Pilot Burners 131
SmartValve System Controls 120–123
SmartVFD COMPACT 600
SmartVFD HVAC 603
SmartVFD HVAC and SmartVFD BYPASS 606
Software
ControLinks 792
Energy 498
LCBS 337
SymmetrE 287
WEBs-AX 312
WEBs-AX Enterprise Security 319, 326
SOLA Controllers 784–788
SOLA Demonstrators 871
Solar Programmable Switch for Lights and Motors 51
Solenoid Gas Valves 846–850
Solenoid Safety Shut-off Valve for IVT 849
Spark Generator 815
Split Core Sensors 499
Spring Return Direct Coupled Actuators 382
Spring Return Direct Coupled Globe Valve Actuators 596
Spyder
Controllers 327–332
Wall Modules 487
Stand-Alone Controllers 362
Standard Capacity Thermostatic Radiator Actuators 259
Standard Capacity Thermostatic Radiator Valves Body 257
Standing Pilot Burner 129
Standing Pilot Combination Gas Controls
Low Voltage 103
Standing Pilot Gas Controls
Line Voltage 99, 105
Low Voltage 99, 103, 105
Millivoltage 101
Static Pressure Regulators 663
Static Pressure Sensor 664
Steam Control, SOLA 785
Steam Humidification Systems 73–74
Steam Valve Selection xxiii
Stryker Configurable Controllers 331
Stryker Configurable Lighting Controllers 335
Submeters 490–498
SuitePRO Thermostats 508
SuperVent® Air Eliminator 243
SuperVent® Vent Top 245
Supply Air Ventilation Products 97–98
Switches
Air Pressure 683
Current 502
Flame 758
Pneumatic Diverting 687

Pneumatic/Electric 684
Pneumatic Position 688
Pressure 855
Residential 49
Switches, Pneumatic 683
Switching Relays 155, 209
Switching Subbase for Thermostats 516
Sylk IO Modules 332
SymmetrE Building Management 287
SymmetrE Software 287

T

Taxes xx
Temperature Controllers 352–368
Temperature Controllers, Pneumatic 657
Temperature Sensors 460–489
Temperature Sensors, Pneumatic 668
Terminal Unit Valve, Pneumatic 719
Terms of Payment and Prices xx
Testers and Demonstrators, Burner Controls 870–872
TheraPro Electronic Radiator Controller 254
Thermocouple, 30 mV 126
Thermocouples and Thermopiles 126–127
Thermocouple, Universal 30 mV 126
Thermometers
Sweat Connection 248
Threaded Connection 248
Thermometers with Thermowells 248
Thermopile Generators 126
Thermostat and Transmitter 344
Thermostat and Zoning Sensors 25
Thermostat Guards 33–35
Thermostatic Mixing or Diverting Valve Actuators 251
Thermostatic Mixing or Diverting Valves 251
Thermostatic Mixing Valves 267, 271
DirectConnect 271
Thermostatic Radiator Valves and Actuators 251–263
Thermostat Kits
Non-Programmable 13
Programmable 7
Wireless 21
Thermostats
7-Day Touchscreen 5, 521
AQUATROL 208
CommercialPRO 522
Communicating 527
Connected 1
Covers Kits 650
EConnect 32
Electric Heat 27
Electronic Dual Setpoint 344
Fan Coil 505
FocusPRO 6, 8, 12
Line Voltage 511
LineVoltPRO 7000 28
LineVoltPRO 8000 28
Lyric 1
Mercury-Free Econo 18
MultiPRO 523
Non-Programmable 12
Pneumatic 640
Prestige IAQ 3, 519
PRO 1000 16
PRO 2000 10
PRO 3000 15
PRO 4000 10
Programmable 3, 518
Proportional 517
RedLINK 520
SuitePRO 508
Total Connect 1, 8
Unit 353
Utility Line Voltage 354
VisionPRO 8000 4, 520
Voice Control 1
Wi-Fi 518
ZonePRO 517
Zoning 528
Z-Wave 6
Threaded Control Ball Valves 543
Threaded Globe Valves 563–565
Threaded Pressure Independent Control Valves 534
Three-Way High Pressure Water Valve 716
Timers, Industrial Indoor and Outdoor 51
Total Connect Comfort
Thermostats 1, 8
TotalZONE™ Add-A-Zone Panel 40
Touchscreens
Thermostats 1
Wi-Fi 9000 518
Z-Wave 6
Training Booklets 888
Transducers
Electronic-Pneumatic 654
Transformers 164–172
Hydronic Controls 213
Ignition 814
Selection Guide 172
Transmitters
Current 500
Differential Pressure 458
Humidity and Temperature 456
Tridicators 248
Triple Aquastat® Relay 190
TrueDRY™ Humidification Systems 69–72
TrueEASE™ Humidifiers 75–76
TrueFRESH Ventilation System 87–95
TrueIAQ Automatic Digital IAQ Control 80
TrueZONE Bypass Damper (CPRD) 42
TrueZONE Fresh Air Damper 98
TrueZONE Zoning Panels and Kits 38–41
Two-Position Actuators 589
Two-Position Draft Damper Actuator 445
Two-Position Modutrol IV™ Motors 414
Two-Position Zone Damper Actuator 445

U

Ultra-low Leakage Design Airfoil Control Damper 369
Ultraviolet Air Treatment Systems 83–86
Ultraviolet Air Treatment Systems, Return Air 85–86
Ultraviolet Flame Detectors 798
Unit Controller and Actuator 343
Unit Thermostat 353
Unit Vent Controllers 341
Unit Ventilator Damper Actuator, Pneumatic 691
Unit Vent Pneumatic Control Valve 707
Universal Electronic Ignition Gas Controls, Low Voltage 115
Universal Injection/Mixing Boiler Reset Control Panel for Hydronic Zoning System 203
Universal Mount Transformer 165
Universal Mount Transformer for Zone Control 48
Universal Pilot Burner 128
Universal Wiring Subbases 775
Utility Line Voltage Thermostat 354
UV Air Purifier with AirBRIGHT™ Odor Absorption, 24 Volt 83–84

V

Valve Actuators 587–599
Valve Actuators, Pneumatic 701–706
Valve and Fail-Safe Actuator Assemblies 581
Valve Bodies Cross Reference 256
Valve Cartridge Changing Tool 263
Valve Linkages 447
Valves
Air 711
Boiler Fill 247
Butterfly Control 551
Butterfly Gas 828
Cage 569
Cartridge Cage 575
Cartridge Globe 570
Control 534, 551
Control Ball 540, 586
Diaphragm Gas 819
Diverting 221, 230, 275
Fan Coil 584
Flanged Globe 554
Industrial Gas 837
Magnetic 178
Mixing 267
Motorized Zone 215
Pilot Gas 845
Pneumatic 707
Pressure Reducing 661
Pressure Regulating 278
Servo Regulated Gas 851
Solenoid Gas 846
Thermostatic Mixing 251
Threaded Globe 563
Valves for Steam
Low Voltage Normally Open 226
Valves, Pneumatic 707–722
Vaporstat® Controllers 863
Variable Air Volume Controllers 340
Variable Frequency Drives 600–636
Variable Volume Damper Actuator, Pneumatic 695
VAV Unit Controller and Actuator 343
Velocitrol Velocity Sensor/Controller 655
Ventilater Boost Remote 97
Ventilation Systems
Balanced TrueFRESH™ 87–95
Fresh Air 96
Venturi Mixing Unit 854
Versaguard Universal Thermostat Guards 33–35
Viewing Head and Processor, All-in-One 876
Viewing Heads 875, 885–886
Visible Light Flame Detector 809
VisionPRO® 8000 with RedLINK™ technology 4, 520
Voice Control Wi-Fi 9000 Color Touchscreen Thermostat 1

W

Wall Module Temperature Sensors 480
Wall Mount Temperature Sensor 472

WATCHDOGIII Flare Stack Signal Processor 874
Water Filters 283
Water Filter System, Reverse Osmosis 74
Water Leak and Freeze Detector 281
Water Sediment Filters 282–284
Water Valves 534–585
  Pneumatic 709, 718
  Pneumatic Sequencing 712
  Three-Way High Pressure 716
WEBs-AX Controllers 304
WEBs-AX Platform - Displays 311
WEBs-AX Security System 317–326
WEBs-AX System 299–316
WEBs-AX System Integration 299
WEBs-AX System Integration, Security 317
WEBs-AX™ Enterprise Security Software 319, 326
WebStat Controller 334
WebVision Controller 334
Well Assemblies 197
Wet/Wet Differential Pressure Sensors 459
Wi-Fi 9000 Color Touchscreen 518
Wi-Fi 9000 Color Touchscreen Thermostat 2, 518
Wi-Fi VisionPRO® 518
Wi-Fi VisionPRO® 8000 Thermostat 2, 518
Winter Watchman 26
Wireless Adapter, RedLINK 24
Wireless Indoor Air Sensor 23
Wireless Occupancy Solution 510
Wireless Outdoor Sensor 22
Wireless Thermostat Kits 7, 13
Wireless Thermostat Kits with Outdoor Sensor 21
Wireless Vent and Filter Boost Remote 97
Wireless Wall Modules 486
Wireless Wall Sensor Kits 484
Wireless Wall Sensors 485
Wireless Zoning Adapter Kits 21
Wiring Mount Base, Protectorelay 869
Wiring Subbases
  ControLinks 790
  Universal 775

Z

ZD Series Dampers 45
Zelix™ Direct Coupled Actuators 382
Zio® LCD Wall Modules 487
Zio® Lite Wall Modules 488
Zio® Plus LCD Wall Modules 489
Zone Control Builder Packs 231
Zone Control Dampers 43–48
Zone Damper 373
  Motor 445
ZonePRO® Modulating/Floating Control Thermostats 517
Zone Valves
  Line Voltage 218
  Low Voltage Normally Closed 222
  Low Voltage Normally Open 227
  Motorized 215
Zone Valves for Canada 224
Zone Valves for Steam
  Line Voltage 220
  Low Voltage Normally Open 226
Zone Valves, Linear Pre-balancing 235
Zone Valves, Motorized 215
Zoning Expansion Panel for Hydronic Zoning System 205
Z-Wave Touch Screen Programmable Thermostat 6

Subject Index

Honeywell Environmental and Combustion Controls Maintains ISO 9001:2008 Registration

What is ISO?

ISO is the International Organization for Standardization. ISO standards used to apply only to manufacturing, but now can be applied to many types of businesses. This promotes a common standard for accessing systems worldwide.

What does ISO 9001 registration involve?

ISO 9001 is part of the ISO 9000 family. Registration is evidence that a Quality Management System has been put in place to verify that customer requirements are being identified and met. This means that an Organization has demonstrated the capability to define, document, and control the processes that define the product or service being supplied. Continuous improvement is assured through the preventive and corrective actions that result from a comprehensive system of Internal Audits and Agency (3rd party) Audits.

Registration focuses on the concept of companies using a process approach to quality management. ISO requires that companies meet some very specific requirements, which include defining the process used and controls for each level of every process, from design, through delivery of the finished product or service. Systems, procedures and documentation are required for all processes.

Each facility must be registered separately since it is the quality management system of each facility that is registered, not the products that are manufactured by the system.

Characteristics of ISO Compliant Businesses

ISO management system standards provide the organization with a model to follow in setting up and operating the management system. This model incorporates the features on which experts in the field have reached a consensus as representing the international state of the art. A management system, which follows the model - or “conforms to the standard” - is built on a firm foundation of state-of-the-art practices. It is a well-organized operation with trained and motivated people. It continually rethinks how it runs its business and focuses on meeting and exceeding customer specifications through eliminating non-value-added functions.

It welcomes outside auditors who review its processes and ensure continual improvement against a universally recognized standard of performance.

What does Honeywell ISO registration offer you?

It offers the confidence and peace of mind that the Honeywell quality system requires production processes that meet highest standards for consistency and control, which translates to consistent product quality.

Honeywell ISO Registered Facilities

Many of the products described in this catalog are built in ISO registered facilities.

The following facilities are registered under ISO 9001:2008 registered by Quality Management Institute; Certificate # CERT-0067107:

ACS ECC – Golden Valley Facility
1985 Douglas Drive North
Golden Valley, MN 55422-3992
USA
File No: 014498

Honeywell International ACS ECC (West Coast Operations)
2055 Dublin Drive
San Diego, CA 92154-8203
USA
File No: 014499

Honeywell International Manufacturas de Chihuahua S de RL de CV
Avenida Cristobal Colon #11364 Complejo Ind. Chihuahua
Chihuahua, C.P. 31136
México
File No: 014501

Honeywell International ACS ECC (Mexhon)
Mexhon S.A. de C.V. Blvd. Insurgentes No. 8503-2
Tijuana, Baja, CA
México
File No: 014504

Honeywell International Inc., A Delaware Corporation ACS ECC
304 S. Chicago Avenue
Freeport, IL 61032
USA
File No: 014587

Honeywell International Inc., A Delaware Corporation
25 E. Spring Street
Freeport, IL 61032
USA
File No: 014588

Honeywell International Manufacturas de Chihuahua S de RL de CV
Ave. Parque Industrial Juárez #3328
Parque Industrial Juárez
Juárez, Chihuahua 32630
México
File No: 1065696

Order Specification Number System

TYPE LETTER	TYPE NUMBER	SUFFIX LETTER	OS NUMBER
V	4055	A	1007

The type letter is the single letter, or two letter group, which begins the model number. This letter usually indicates the general type of device involved, however, some product model numbers may not follow these designations exactly. If you have questions about a particular product designation, please contact your Honeywell sales representative. A list of type letters used is shown below (some may fit in more than one category):

A — Testers.
AT — Transformers.
BC — Microcomputer burner control system.
C or CS — Combustion controls; sensors.
D or DM — Dampers.
DSP — Demonstrators.
EL — Lighting controls.
ER — Energy recovery ventilators.
F — Electronic air cleaners.
H — Humidity controls, including combination temperature and humidity controllers.
L, LA or LS — Limit controllers.
M — Motors.
P — Pressure controllers.
PM — Program modules.
Q — Accessories.
QS — Communication interface modules.
R, RA or RW — Relays.
RM — Primary controls.
S — Switches and ignition modules.
ST — Electronic fan timers.
SV — Integrated controls.
T, TA or TS — Thermostats and remote bulb temperature controllers.
TG — Thermostat guards.
V, VR, VS or VW — Valves.
W — Load control panels, accessories.
Y — Package sets.
ZM — Software packages.

Summary of Honeywell Control Series Designations

Series Designation	Controller Type	Controller Action	Relay or Valve Type	Motor Action	Example
Series 20	3-wire, low voltage (2-position)	Makes circuit to start; makes second circuit to stop.	—	Low voltage; rotates 180 to open, continues 180 to close; stops on power interruption.	V2045
Series 40	2-wire, line voltage (2-position)	Makes circuit to start; breaks it to stop.	Line voltage coil circuit; makes (opens) when powered; breaks (closes) when power interrupted.	Line voltage; motor drives open when powered; spring returns on power interruption.	T42, L4064, L4008
Series 50	Mechanical (nonelectrical) series.				V5011
Series 60	3-wire, line voltage (2-position)	Makes circuit to start; makes second circuit to stop.	—	Old style—line voltage equivalent to series 20. New style—line or low voltage drives open when powered open; reverses and drives closed when powered closed; stops on power interruption.	M6284
Series 70	Electronic series.				M7285, C7031
Series 80	2-wire, low voltage (2-position)	Makes circuit to start; breaks it to stop.	Low voltage coil circuit; makes (opens) when powered; breaks (closes) when power interrupted.	Low voltage; motor drives open when powered; spring return closed on power interruption.	T87, L8124
Series 90	3-wire, low voltage (modulating)	Varies resistance between common terminal and two end terminals in response to controlled variable.	—	Low voltage; motor modulates position in response to changes in controlled variable signaled by controller.	T921, M9164, W899

Approval Bodies

Most of the devices described in this catalog have been approved or listed by one or more of the approval bodies listed below.

Underwriters Laboratories Inc.

Underwriters Laboratories Inc., is a Limited Liability Corporation (LLC) that examines and tests devices, systems and materials. Its membership represents a broad cross section of industry, education, and government.

Field inspectors for Underwriters Laboratories Inc., do not normally inspect equipment installed on job sites, but restrict their activities entirely to periodic inspections of products coming off manufacturers' assembly lines.

The three general categories of acceptance of a product by Underwriters Laboratories Inc., are:

1. Listing
2. Component Recognition
3. Classification

Listed devices are structurally and functionally complete and suitable for field installation.

Component Recognized devices are incomplete in some way that makes them unsuitable for general field installation. They are intended to be factory installed as part of some other piece of equipment.

Classified devices or products have been evaluated as to specific hazards only.

Underwriters Laboratories of Canada can also provide certification services to Canadian standards, which is displayed as a "c" adjacent to the UL mark (cUL).

CSA - Canadian Standards Association

The Canadian Standards Association is a not-for-profit, membership-based, non-governmental organization which provides a national standardizing body for Canada.

The Canadian Standards Association Testing Laboratories, inaugurated in May 1940, is a division of the Canadian Standards Association, and is recognized as a testing and investigating agency by Inspection Authorities and by Fire Marshals and Fire Commissioners throughout Canada.

The Canadian Standards Association Laboratories test and examine electrical products submitted for approval in compliance with pertinent Canadian Standards Association codes and standards.

The Canadian Standards Association now includes International Approval Services (IAS).

CSA can also provide certification services to UL standards, which is indicated by a "US" adjacent to the CSA mark.

International Approval Services—U.S.

IAS, now part of CSA and no longer known as IAS, is the testing organization of the American gas industry with laboratories in Cleveland, Ohio and Irvine, Calif. The CSA sponsors the American National Standards Institute Z21 and Z83 Committees on standards for gas-fired equipment.

Any manufacturer of gas appliances or gas appliance accessories may submit their products to the Laboratories and secure certification of their designs upon compliance with the appropriate national standards. Upon such compliance, the manufacturer is granted an Appliance Certificate or an Accessory Certificate and is permitted to display the trademarked Laboratories' Certification Seal or trademarked Laboratories' Certification Symbol on the appliance or accessory.

International Approval Services—Canada

IAS, now part of CSA and no longer known as IAS, represents all segments of the Canadian gas industry, has been accredited by the Standards Council of Canada and the Standards Advisory Committee to prepare National Standards in the area of equipment for use with natural gas and propane. CSA has laboratories in Toronto, Canada.

Each standard is intended to be used within the scope of the standard by the manufacturing sector, those applying the equipment or those responsible for its application. It is the responsibility of the user to determine in each case that the standard is suitable for the application.

IAS operates a certification program for gas appliances, equipment, and accessories.

Canadian Gas Association (CGA), is now part of CSA and is no longer known as CGA, although some legacy products still may display the CGA mark.

American Gas Association (AGA) is also now part of CSA and is no longer known as AGA, although some legacy products still may display the AGA mark.

Factory Mutual

Factory Mutual is an association of mutual insurance companies dedicated to loss prevention. Through its research arm, the Factory Mutual Research Corporation, it investigates means of preventing and minimizing fire and other losses. Factory Mutual Laboratories test and approve two broad categories of devices and materials:

1. Those used for the control or prevention of property damage.
2. Those that in themselves would present serious hazards if not properly designed.

Factory Mutual Acceptance refers to a specific installation or arrangement of equipment. Installations using approved devices, if found satisfactory following review of plans and inspection of completed work, are "accepted".

A continuing follow-up program is carried out through periodic plant inspections and reports of performance in actual use.

CE Mark ("Conformité Européene" European Self-Certification mark)

CE marking is mandatory for products covered by one or more Directives. The manufacturer must apply the CE mark and declare conformity to the applicable Directives in order to bring a product on the market in the European Community. CE marking requirements vary from Directive to Directive, and even within Directives.

Some of the Directives (e.g. Gas Appliance Directive) require third party testing by Notified Bodies, in which case a product surveillance contract with a Notified Body is also mandatory. Other Directives can be satisfied by Declarations of Conformity provided by the manufacturer as a result of internal testing and documentation.

C-Tick

The Australian C-Tick mark is intended for use on products that comply with EMC standards. The C-Tick mark is a certification trademark registered to the ACA by the Trademarks Office and is only to be used in accordance with conditions laid down by the ACA (Australian Communications Authority). The C-Tick mark is valid for both countries and may be applied by either a New Zealand supplier or an Australian supplier.

AGA – Australia Gas Association

AGA reviews a product's CE Mark EMC report and/or Declarations and issues a certificate allowing import into Australia and New Zealand.

The approved product will bear the C-Tick mark with the assigned number of the importer.

Reference Information

Date Code

A date code is stamped on each device to identify the date of manufacture.

In October 1975, Honeywell adopted the industry standard date code system of a 4-digit code. The first 2 digits indicate the year; the second 2 digits indicate the week of the year. EXAMPLE: 7812—the last week of March 1978.

For devices manufactured before October 1975, the following date code was used. If the letter "R" is added as a third letter, it indicates a repair date.

A January	G July	H 1962	Z 1970
B February	H August	G 1963	Y 1971
C March	I September	F 1964	X 1972
D April	J October	E 1965	W 1973
E May	K November	D 1966	V 1974
F June	L December	C 1967	U 1975
		B 1968	T 1976
		A 1969	

Terms of Payment and Prices

Contact your local Honeywell TRADELINE Wholesaler or Authorized Distributor for your discount and terms of payment.

Taxes

The amount of any and all present or future taxes or other government charges upon the production, shipment, installation or sale of the equipment covered hereby, including use or occupation taxes, shall be added to the price and paid by the Purchaser; or in lieu thereof, the Purchaser shall furnish the Company with a tax-exemption certificate acceptable to the taxing authorities.

International Controls

Some Honeywell controls are available with Celsius scales and/or at 110/220V, 50 Hz. For information on the availability of these devices, contact:

Commercial/Industrial Combustion Controls
Honeywell International Inc., MN10-181B
1985 Douglas Drive North
Golden Valley, MN 55422-3992

All other controls and systems:
International Marketing MN10-131A
Honeywell International Inc.
1985 Douglas Drive North
Golden Valley, MN 55422-3992

Horsepower Ratings

Ratings of Honeywell controls listed herein are in amperes, and correspond generally to the values for various horsepowers as shown in this chart. Full load ratings are taken from the National Electrical Code, 1978 edition; locked motor ratings are 6 times full load rating (ac) or 10 times full load rating (dc).

All motors do not necessarily come within the maximum ampere ratings shown in the table, and control devices must be used which have a rating equal to, or greater than, the actual motor running and starting currents.

Approximate Horsepower	120V		240V	
	Full Load	Locked Rotor	Full Load	Locked Rotor
1/6 ac dc	4.4 —	26.4 —	2.2 —	13.2 —
1/4 ac dc	5.8 3.1	34.8 31.0	2.9 1.6	17.4 16.0
1/3 ac dc	7.2 4.1	43.2 41.0	3.6 2.0	21.6 20.0
1/2 ac dc	9.8 5.4	58.8 54.0	4.9 2.7	29.4 27.0
3/4 ac dc	13.8 7.6	82.8 76.0	6.9 3.8	41.4 38.0
1 ac dc	16.0 9.5	96.0 95.0	8.0 4.7	48.0 47.0
1 to 1-1/2 ac dc	20.0 13.2	120.0 132.0	10.0 6.6	60.0 66.0
2 ac dc	24.0 17.0	144.0 170.0	12.0 8.5	72.0 85.0
3 ac dc	34.0 25.0	204.0 250.0	17.0 12.2	102.0 122.0

NEMA Standard Classification Code for Flame Safeguard Enclosures

NEMA 1—General purpose. For indoor protection, where conditions are not unusually severe.

NEMA 2—Driptight. Designed to exclude falling moisture or dirt. Particularly applicable to cooling rooms, laundries, etc., where condensation is prevalent. For indoor use.

NEMA 3—Weather Resistant (weatherproof). For outdoor use; designed to withstand all normal exposure to natural elements. Controls mounted on pullout racks for easy access. With rain hood and weather seals.

NEMA 4—Watertight. Withstands water pressure from 1 in. hose nozzle, 65 gallons per minute, from distance of not less than 10 ft. for five minutes. Suitable for maritime applications, breweries, etc.

NEMA 5—Dust-tight. Equipped with dust-tight gaskets. Suitable for mills and other high-dust atmospheres.

NEMA 6—Submersible. For submerged operation under specified pressures and time.

NEMA 7—Hazardous Locations, National Electrical Code Class 1 (circuit breaks in air).

NEMA 8—Hazardous Locations, National Electrical Code Class 1 (circuit breaks immersed in oil).

NEMA 9—Hazardous Locations, National Electrical Code Class 2.

NEMA 10—Explosion-proof. Meets U.S. Bureau of Mines requirements for explosive atmospheres.

NEMA 11—Acid or Fume Resistant. Provides for immersion of enclosed equipment in oil.

NEMA 12—Industrial Use. Excludes oils, dust, moisture, to satisfy individual requirements.

Conversion of Pressure Units

(Convert by multiplying value in known pressure units by factor listed under required pressure unit.)

Known Pressure Unit	Required Pressure Unit								
	Kilo-pascals	Pounds per sq in.	Ounces per sq in.	Millimeters of Mercury	Kilograms per sq cm	Inches of Water	Inches of Mercury	Feet of Water	Centimeters of Water
Centimeters of Water	0.0981	0.0142	0.227	0.735	0.000999	0.394	0.0289	0.0328	—
Feet of Water	2.99	0.433	6.94	22.4	0.0305	12.0	0.883	—	30.5
Inches of Mercury	3.39	0.491	7.86	25.4	0.0345	13.6	—	1.13	34.6
Inches of Water	0.249	0.0361	0.578	1.87	0.00254	—	0.0735	0.0833	2.54
Kilograms per sq cm	98.1	14.2	228.0	735.0	—	394.0	29.0	32.8	1000.0
Millimeters of Mercury	0.133	0.0193	0.308	—	0.00136	0.535	0.0394	0.0446	1.36
Ounces per sq in.	0.431	0.0625	—	8.24	0.00439	1.73	0.128	0.144	4.40
Pounds per sq in.	6.89	—	16.0	51.7	0.0703	27.7	2.04	2.31	70.4
Kilo-pascals	—	0.145	2.32	7.52	0.010	4.02	0.295	0.334	10.2

Absolute Pressure = Gauge Pressure +14.74 psi.

Capacities

Most gas capacities listed in this catalog are stated for natural gas, based on 1,000 Btu per cu ft, 0.64 sp. gr. nat. gas, at a pressure drop of 1.0 in. w.c. (37.3 MJ/m^3, 0.64 sp. gr. at a pressure drop of 0.25 kPa).

To calculate the Btu/h capacity for other gases, multiply the listed Btu/h capacity by the conversion factor.

Total Heating Value for Gas X		At sp. gr.	Conversion Factor (multiply)
Btu/cu ft	MJ/m^3		
500 to 800	18.7 to 29.8	0.60	0.516[a]
800 to 950	29.8 to 35.4	0.70	0.765[a]
2500	93.3	1.53 (LP gas)	1.62

[a] Nominal conversion factor for range of total heat value.

For gases not listed in table, use one of the following formulas:

$$\left(\frac{\text{Btu/h Capacity}}{(0.64\text{ sp. gr.})}\right)\left(\sqrt{\frac{0.64}{\text{sp. gr. gas X}}}\right)\left(\frac{\text{Btu/cu ft (MJ/m}^3\text{ gas X)}}{\text{1000 Btu/cu ft (37.3 MJ/m}^3\text{)}}\right) = \text{Btu/h Capacity gas X}$$

or

$$\left(\frac{\text{Btu/h Capacity}}{(\text{gas A})}\right)\left(\sqrt{\frac{\text{sp. gr. gas A}}{\text{sp. gr. gas B}}}\right)\left(\frac{\text{Btu/cu ft (MJ/m}^3\text{) gas B}}{\text{Btu/cu ft (MJ/m}^3\text{) gas A}}\right) = \text{Btu/h Capacity gas B}$$

M18317

Power & Heat

1 Btu	776 ft-lb 0.293 Watt-hr 252 cal
1 cal	0.003968 Btu 0.0011619 Watt-hr
1 Btu/h	0.293 Watt 4.2 cal/min
1 Watt	3.413 Btu/h
1 Watt-hr	3.413 Btu
1 kW (1000 Watts)	3413 Btu/h
1 kW-hr	3413 Btu
1 hp	0.746 kW 2544.65 Btu/h 33,000 ft-lb./min
1 Bohp[a]	9.809 kW 33,479 Btu/h 34.5 lb of steam per hour

[a] Boiler Output Horsepower is the equivalent of the heat required to evaporate 34.5 lb of water per hour into dry, saturated steam at 212°F.

Btu Contents of Fuels

Grade or Type	Unit	Btu
No. 1 Oil	Gallon	137,400
No. 2 Oil	Gallon	139,600
No. 3 Oil	Gallon	141,800
No. 4 Oil	Gallon	145,100
No. 5 Oil	Gallon	148,800
No. 6 Oil	Gallon	152,400
Nat. Gas	cu ft	950 to 1,150
Propane	cu ft	2,550
Butane	cu ft	3,200

Commercial/Industrial Combustion Conversion Factors

Simplified method of determining combustion air required to completely burn a given amount of fuel.

$$\text{Cf/h Air} = \frac{\text{Btu/hr input}}{100}$$

M18318

To correct gas volume from one set of conditions to another.

$$\frac{P_1 V_1}{T_1} = \frac{P_2 V_2}{T_2}$$

P = Absolute pressure.

= 14.7 + gauge psi.

T = Absolute temperature in -R = 460.

V = Volume in any consistent terms.

Normally useful for determining standard cubic feet of fuel consumed when metering pressure is other than standard; e.g., gas passing through a volumetric gas meter at 5 psig. (The heating value of fuel gases is based on Btu/cf at standard gas conditions.)

Turndown ratio of fixed area burner.

$$\text{T.D.} = \sqrt{\frac{\text{Maximum Pressure Drop across Burner}}{\text{Minimum Pressure Drop across Burner}}} = \frac{\text{Maximum Firing Rate}}{\text{Minimum Firing Rate}}$$

M18319

Where pressure drops are expressed in the same units.

Relationship between flow capacity at a specified pressure drop and C_v factor.

C_v = Flow Factor. Defined as the amount of water at 60°F in gallons per minute which will flow through a valve in the open position with a pressure drop through the valve of 1 pound per square inch.

For capacity conversion to gases the following may be used for pressure ratios less than critical ratios.

$$Q = 1360\, C_v \sqrt{\frac{(P_1 - P_2)\, P_2}{GT}}$$

M18320

Q = Standard cubic feet per hour at 14.7 psia and 60°F.

P_1 = Inlet pressure, psia.

P_2 = Outlet pressure, psia.

T = Absolute temperature in -R = -F+460.

G = Specific gravity of the gas.

Steam Valve Selection

There are five steps in choosing the appropriate steam valve:

1. Determine the steam medium temperature, pressure, and the pressure drop across the valve. (This is often determined using inlet vs. outlet pressures. For example, a valve with a 75 psi inlet and a 50 psi outlet would have a pressure drop of 25 psi.)
2. Using this information (and Tables 1 and 2), calculate the C_v or select the pipe size.
3. Check the average pressure and the temperature to determine the quality of the steam medium. The quality of the steam is:
   - Saturated
   - Superheated
4. Establish the required valve body configuration for the application. This is typically fixed by the particular application and is often part of the design specifications. Standard body configurations are:
   - Two-way
     - Straight-through
     - Angle Body
5. See valve and actuator Product Overview Table and individual catalog pages.

NOTE: Traditionally, steam valves use a linear flow characteristic, but equal percentage characteristics are used in Europe.

All steam valves are two-way valves. There are two valve operation control types; two-position (open/closed) and modulating (proportional).

Two-Position

Two-position steam valves are typically selected based on the pipe size of the line, which is matched to the coil to deliver the amount of steam required at design conditions. For example, if the pipe size is three inches in diameter, you would select a three inch steam valve. Delivered heat is a function of steam pressure, valve capacity index (C_v), and the percentage open time of the valve (duty cycle). The condensed steam may be returned to the boiler by active or passive methods.

Modulating

Two-way modulating steam valves are typically used to throttle the flow of steam in proportion to the load. Similar to water valves, when sizing a modulating valve for steam, consider the pressure throughout the valve travel. The pressure drop must be large enough so that, as the valve starts to close, it can diminish the flow. If this is not accomplished, the valve is not able to maintain control throughout its entire range of travel. However, a pressure drop that is too large causes noisy valve operation and decreases the life span of the valve.

Calculating C_v

To determine the appropriate C_v rating, one must know:

Supply pressure (psi)

Valve differential pressure (Δp)

Flow rate (lb/hr)

$$C_v = \frac{Q\sqrt{v}}{63.5\sqrt{\Delta p}}$$

M34741

Q = Quantity of Steam (pounds per hour)

v = specific volume of steam (cubic feet per pound) at the average pressure in the valve

63.5 = scaling constant

Δp = pressure drop in psi

When Btu/hr (heat output) is known:
Using the supply pressure, differential pressure and Table 1, determine the value of Factor A for the application. Then using Factor A, the flow rate and Table 2, determine the C_v for the application.

Table 1. Calculations of Factor A for Steam Valves

Supply (psig)	Return Pressure (psig)																					Supply (Bar)
	0	1	2	3	4	5	6	7	8	9	10	11	12	15	20	25	30	40	50	60	70	
2	4.0	5.5																				0.1
3	3.2	3.9	5.4																			0.2
4	2.7	3.1	3.7	5.2																		0.3
5	2.4	2.7	3.0	3.7	5.1																	0.3
6	2.2	2.3	2.6	2.9	3.6	5.0																0.4
7	2.0	2.1	2.3	2.5	2.9	3.5	4.9															0.5
8	1.8	1.9	2.1	2.2	2.5	2.8	3.4	4.8														0.6
9	1.7	1.8	1.9	2.0	2.2	2.4	2.8	3.3	4.7													0.6
10	1.6	1.7	1.7	1.8	2.0	2.1	2.4	2.7	3.3	4.6												0.7
11	1.5	1.6	1.6	1.7	1.8	1.9	2.1	2.3	2.6	3.2	4.5											0.8
12	1.4	1.5	1.5	1.6	1.7	1.8	1.9	2.0	2.3	2.6	3.1	4.4										0.8
15	1.2	1.3	1.3	1.3	1.4	1.4	1.5	1.6	1.7	1.8	1.9	2.1	2.5									1.0
20	1.0	1.0	1.0	1.1	1.1	1.1	1.1	1.2	1.2	1.3	1.3	1.4	1.4	1.8								1.4
25	0.9	0.9	0.9	0.9	0.9	0.9	0.9	1.0	1.0	1.0	1.0	1.1	1.1	1.2	1.7							1.7
30	0.8	0.8	0.8	0.8	0.8	0.8	0.8	0.8	0.8	0.8	0.9	0.9	0.9	1.0	1.1	1.6						2.1
40	0.7	0.7	0.7	0.6	0.6	0.6	0.6	0.6	0.6	0.7	0.7	0.7	0.7	0.7	0.8	0.9	1.0					2.8
50	0.6	0.6	0.6	0.6	0.6	0.6	0.6	0.5	0.5	0.5	0.5	0.5	0.6	0.6	0.6	0.6	0.7	0.9				3.4
60	0.5	0.5	0.5	0.5	0.5	0.5	0.5	0.5	0.5	0.5	0.5	0.5	0.5	0.5	0.5	0.5	0.5	0.6	0.9			4.1
70	0.4	0.4	0.4	0.4	0.4	0.4	0.4	0.4	0.4	0.4	0.4	0.4	0.4	0.4	0.4	0.4	0.5	0.5	0.6	0.8		4.8
80	0.4	0.4	0.4	0.4	0.4	0.4	0.4	0.4	0.4	0.4	0.4	0.4	0.4	0.4	0.4	0.4	0.4	0.4	0.5	0.6	0.8	5.5
	.00	**.07**	**.14**	**.21**	**.28**	**.34**	**.41**	**.48**	**.55**	**.62**	**.69**	**.76**	**.83**	**1.03**	**1.38**	**1.72**	**2.07**	**2.76**	**3.45**	**4.14**	**4.83**	
	Return Pressure (Bar)																					

Table 2. Steam valve C_v final Calculation

	Steam Flow Rate (in lb/hr)																							
		5	10	25	50	75	100	200	300	400	500	600	700	800	900	1k	2k	3k	4k	5k	7.5k	10k	20k	30k
FACTOR A	0.4			0.16	0.31	0.47	0.63	1.26	1.9	2.5	3.1	3.8	4.4	5.0	5.7	6.3	13	19	25	31	47	63	126	189
	0.5		0.08	0.20	0.39	0.59	0.79	1.6	2.4	3.1	3.9	4.7	5.5	6.3	7.1	7.9	16	24	31	39	59	79	157	236
	0.6		0.09	0.24	0.47	0.71	0.94	1.9	2.8	3.8	4.7	5.7	6.6	7.6	8.5	9.4	19	28	38	47	71	94	189	283
	0.7		0.11	0.28	0.55	0.83	1.1	2.2	3.3	4.4	5.5	6.6	7.7	8.8	9.9	11.0	22	33	44	55	83	110	220	331
	0.8		0.13	0.31	0.63	0.94	1.3	2.5	3.8	5.0	6.3	7.6	8.8	10.1	11.3	13	25	38	50	63	94	126	252	378
	0.9		0.14	0.35	0.71	1.1	1.4	2.8	4.3	5.7	7.1	8.5	9.9	11.3	13	14	28	43	57	71	106	142	283	425
	1		0.16	0.39	0.79	1.2	1.6	3.1	4.7	6.3	7.9	9.4	11.0	13	14	16	31	47	63	79	118	157	315	472
	1.1		0.17	0.43	0.87	1.3	1.7	3.5	5.2	6.9	8.7	10.4	12	14	16	17	35	52	69	87	130	173	346	520
	1.2		0.19	0.47	0.94	1.4	1.9	3.8	5.7	7.6	9.4	11.3	13	15	17	19	38	57	76	94	142	189	378	567
	1.3	0.10	0.20	0.51	1.0	1.5	2.0	4.1	6.1	8.2	10.2	12	14	16	18	20	41	61	82	102	154	205	409	614
	1.4	0.11	0.22	0.55	1.1	1.7	2.2	4.4	6.6	8.8	11.0	13	15	18	20	22	44	66	88	110	165	220	441	
	1.5	0.12	0.24	0.59	1.2	1.8	2.4	4.7	7.1	9	12	14	17	19	21	24	47	71	94	118	177	236	472	
	1.6	0.13	0.25	0.63	1.3	1.9	2.5	5.0	7.6	10.1	13	15	18	20	23	25	50	76	101	126	189	252	504	
	1.7	0.13	0.27	0.67	1.3	2.0	2.7	5.4	8.0	10.7	13	16	19	21	24	27	54	80	107	134	201	268	535	
	1.8	0.14	0.28	0.71	1.4	2.1	2.8	5.7	8.5	11.3	14	17	20	23	26	28	57	85	113	142	213	283	567	
	1.9	0.15	0.30	0.75	1.5	2.2	3.0	6.0	9.0	12	15	18	21	24	27	30	60	90	120	150	224	299	598	
	2	0.16	0.31	0.79	1.6	2.4	3.1	6.3	9.4	13	16	19	22	25	28	31	63	94	126	157	236	315	630	
	2.1	0.17	0.33	0.83	1.7	2.5	3.3	6.6	9.9	13	17	20	23	26	30	33	66	99	132	165	248	331		
	2.2	0.17	0.35	0.87	1.7	2.6	3.5	6.9	10.4	14	17	21	24	28	31	35	69	104	139	173	260	346		
	2.3	0.18	0.36	0.91	1.8	2.7	3.6	7.2	10.9	14	18	22	25	29	33	36	72	109	145	181	272	362		
	2.4	0.19	0.38	0.94	1.9	2.8	3.8	7.6	11.3	15	19	23	26	30	34	38	76	113	151	189	283	378		
	2.5	0.20	0.39	0.98	2.0	3.0	3.9	7.9	12	16	20	24	28	31	35	39	79	118	157	197	295	394		
	2.6	0.20	0.41	1.0	2.0	3.1	4.1	8.2	12	16	20	25	29	33	37	41	82	123	164	205	307	409		
	2.7	0.21	0.43	1.1	2.1	3.2	4.3	8.5	13	17	21	26	30	34	38	43	85	128	170	213	319	425		
	2.8	0.22	0.44	1.1	2.2	3.3	4.4	8.8	13	18	22	26	31	35	40	44	88	132	176	220	331	441		
	2.9	0.23	0.46	1.1	2.3	3.4	4.6	9.1	14	18	23	27	32	37	41	46	91	137	183	228	343	457		
	3	0.24	0.47	1.2	2.4	3.5	4.7	9.4	14	19	24	28	33	38	43	47	94	142	189	236	354	472		
	3.1	0.24	0.49	1.2	2.4	3.7	4.9	9.8	15	20	24	29	34	39	44	49	98	146	195	244	366	488		
	3.2	0.25	0.50	1.3	2.5	3.8	5.0	10.1	15	20	25	30	35	40	45	50	101	151	202	252	378	504		
	3.3	0.26	0.52	1.3	2.6	3.9	5.2	10.4	16	21	26	31	36	42	47	52	104	156	208	260	390	520		
	3.4	0.27	0.54	1.3	2.7	4.0	5.4	10.7	16	21	27	32	37	43	48	54	107	161	214	268	402	535		
	3.5	0.28	0.55	1.4	2.8	4.1	5.5	11.0	17	22	28	33	39	44	50	55	110	165	220	276	413	551		
	3.6	0.28	0.57	1.4	2.8	4.3	5.7	11.3	17	23	28	34	40	45	51	57	113	170	227	283	425	567		
	3.7	0.29	0.58	1.5	2.9	4.4	5.8	11.7	17	23	29	35	41	47	52	58	117	175	233	291	437	583		
	3.9	0.31	0.61	1.5	3.1	4.6	6.1	12	18	25	31	37	43	49	55	61	123	184	246	307	461	614		
	4.4	0.35	0.69	1.7	3.5	5.2	6.9	14	21	28	35	42	49	55	62	69	139	208	277	346	520			
	4.5	0.35	0.71	1.8	3.5	5.3	7.1	14	21	28	35	43	50	57	64	71	142	213	283	354	531			
	4.6	0.36	0.72	1.8	3.6	5.4	7.2	14	22	29	36	43	51	58	65	72	145	217	290	362	543			
	4.7	0.37	0.74	1.9	3.7	5.6	7.4	15	22	30	37	44	52	59	67	74	148	222	296	370	555			
	4.8	0.38	0.76	1.9	3.8	5.7	7.6	15	23	30	38	45	53	60	68	76	151	227	302	378	567			
	4.9	0.39	0.77	1.9	3.9	5.8	7.7	15	23	31	39	46	54	62	69	77	154	231	309	386	579			
	5	0.39	0.79	2.0	3.9	5.9	7.9	16	24	31	39	47	55	63	71	79	157	236	315	394	591			
	5.2	0.41	0.82	2.0	4.1	6.1	8.2	16	25	33	41	49	57	66	74	82	164	246	328	409	614			
	5.3	0.42	0.83	2.1	4.2	6.3	8.3	17	25	33	42	50	58	67	75	83	167	250	334	417				
	5.4	0.43	0.85	2.1	4.3	6.4	8.5	17	26	34	43	51	60	68	77	85	170	255	340	425				
	5.5	0.43	0.87	2.2	4.3	6.5	8.7	17	26	35	43	52	61	69	78	87	173	260	346	433				

IMPORTANT

If the steam is superheated, it can require a valve with a larger C_v. Use the following equation to determine the correct C_v to use:

$C_v = C_v$ Calculated *x [1 + (0.00075 x S)]*

Where: S = degrees of superheat (in Fahrenheit).

If the calculated C_v falls between two valve sizes, use a valve with the next higher C_v value unless the calculated C_v is within 10 percent of the next lower C_v value.

CAUTION

Pressure reducing valves can also produce superheated steam and exceed the valve's temperature rating.

For example: 100 psi steam at 338°F passing through a pressure reducing valve gives up no heat as it expands to 10 psi, so the 10 psi steam downstream will be at 338°F not 239°F. This is 99 Fahrenheit degrees of superheat and downstream valves and piping will be exposed to the higher temperature. To correct for superheated steam, 1 Btu/lb is added for each Fahrenheit degree of superheat.

Superheat–The additional heat contained in a vapor at a temperature higher than the saturation (boiling) temperature corresponding to the pressure of the vapor.

Table 3. Properties of Saturated Steam

Vacuum, Inches of Mercury	Boiling Point or Steam Temperature Deg. F	Specific Volume (V), cu. ft/lb	$\sqrt{V}$ (For valve sizing)	Maximum Allowable Pressure Drop, psi. (For valve sizing)	Heat of the Liquid, Btu	Latent Heat of Evap., Btu	Total Heat of Steam, Btu
29	76.6	706.00	26.57	0.23	44.7	1048.6	1093.3
25	133.2	145.00	12.04	1.2	101.1	1017.0	1118.1
20	161.2	75.20	8.672	2.4	129.1	1001.0	1130.1
15	178.9	51.30	7.162	3.7	146.8	990.6	1137.4
14	181.8	48.30	6.950	3.9	149.7	988.8	1138.5
12	187.2	43.27	6.576	4.4	155.1	985.6	1140.7
10	192.2	39.16	6.257	4.9	160.1	982.6	1142.7
8	196.7	35.81	5.984	5.4	164.7	980.0	1144.7
6	201.0	32.99	5.744	5.9	168.9	977.2	1146.1
4	204.8	30.62	5.533	6.4	172.8	974.8	1147.6
2	208.5	28.58	5.345	6.9	176.5	972.5	1149.0
Gage Pressure, psig							
0	212.0	26.79	5.175	7.4	180.0	970.4	1150.4
1	215.3	25.20	5.020	7.8	183.3	968.2	1151.5
2	218.5	23.78	4.876	8.4	186.6	966.2	1152.8
3	221.5	22.57	4.751	8.8	189.6	964.3	1153.9
4	224.4	21.40	4.626	9.4	192.5	962.4	1154.9
5	227.1	20.41	4.518	9.8	195.3	960.6	1155.9
6	229.8	19.45	4.410	10.4	198.0	958.8	1156.8
7	232.3	18.64	4.317	10.8	200.5	957.2	1157.7
8	234.8	17.85	4.225	11.4	203.0	955.5	1158.5
9	237.1	17.16	4.142	11.8	205.4	954.0	1159.4
10	239.4	16.49	4.061	12.4	207.7	952.5	1160.2
11	241.6	15.90	3.987	12.8	209.9	951.1	1161.0
12	243.7	15.35	3.918	13.4	212.1	949.7	1161.8
15	249.8	13.87	3.724	14.8	214.2	948.3	1162.5
20	258.8	12.00	3.464	17.4	227.4	939.5	1166.9
25	266.8	10.57	3.251	19.8	235.6	934.0	1169.6
30	274.0	9.463	3.076	22.4	243.0	928.9	1171.9
40	286.7	7.826	2.797	27.4	255.9	919.9	1175.8
50	297.7	6.682	2.585	32.4	267.1	911.9	1179.0
60	307.3	5.836	2.416	37.4	277.1	904.7	1181.8
70	316.0	5.182	2.276	42.4	286.1	898.0	1184.1
80	323.9	4.662	2.159	47.4	294.3	891.9	1186.2
90	331.2	4.239	2.059	52.4	301.9	886.1	1188.0
100	337.9	3.888	1.972	57.4	308.9	880.7	1189.6
120	350.0	3.337	1.827	67.4	321.7	870.7	1192.4
140	360.9	2.923	1.710	77.4	333.1	861.5	1194.6

Honeywell Authorized Distributors

Certain Honeywell product lines are available only through authorized distributors. Authorized distributors have chosen to make a commitment to representing Honeywell controls. They are committed to excellence:

- in education, by providing continuing training in HVAC industry developments to their employees.
- in application, by choosing the right system for each application.
- in marketing, by providing customers with accurate information and efficient service.

7800 SERIES Distributors

For commercial and industrial burner and boiler controls and systems, and 7800 SERIES burner controls.

Authorized Systems Distributors

Complete access to building automation systems, standalone controls and commercial field device products.

Combustion Solutions Distributors

For commercial and industrial combustion solutions and components.

Commercial Controls Distributors

Access to light commercial building automation systems, standalone controls and commercial field device products.

ControLinks™ Representatives

For ControLinks Products.

FOR YOUR CONVENIENCE

For more information about authorized distributors or for the name of a particular outlet in your area, use our toll-free number.

1-800-345-6770

Lyric™ Thermostat

The Lyric thermostat is ideal for customers who are always on the go and want optimal comfort and savings they don't have to think about. Instead of operating on a fixed schedule, Lyric uses their smartphone location to automatically adjust the temperature as they come and go – delivering comfort when they're home and savings when they're away. It's the next generation of connectivity, from the home comfort leader.

- Remote Access
- Lyric App allows you to control with your smartphone or tablet
- Geofence control for savings when you're away and comfort when you're home
- Fine Tune temperature control
- Smart Cues for system information and recommendations

Display: Round
Color: White
Changeover: Auto/Manual
Programmability: Programmable with Geofencing
Setting Temperature Range: Heat: 40°F to 90°F; Cool 50°F to 99°F (Heat: 4.5°C to 32.0°C; Cool: 10°C to 37.0°C)
Operating Temperature Range: 32°F to 120°F (0°C to 48.9°C)
Humidification Setting Range: Cooling: 40 to 80% RH. Heating: 10 to 60% RH.
Dehumidification Setting Range: 40 to 80% RH.
Operating Humidity Range (% RH): 5 to 90% RH, non-condensing
Power Method: Hardwired, Battery Back-up, Power Transformation
Supply Voltage: 18 to 30 Vac
Frequency: 50 Hz; 60 Hz
Electrical Connections: Push Terminals
Electrical Ratings: 18 to 30 Vac
Approvals, FCC: Approved
Approvals, Underwriters Laboratories Inc.: Approved

Material Number	Applications	Switch Positions (System)	Switch Positions (Fan)	Terminal Designations	Stages
TH8732WFH5002/U US model	Up to 3 Heat/2 Cool Heat Pumps; Up to 2 Heat/2 Cool Conventional Systems	HEAT-OFF-COOL-AUTO-EM. HEAT	AUTO-ON-CIRC	R, Rc, W-O/B, W2-Aux/E. Y, Y2, G, C, K, L, U1, U2	Up to 3 Heat/2 Cool Heat Pumps; Up to 2 Heat/2 Cool Conventional Systems
TH8732WFH5010/U Canada model	Up to 3 Heat/2 Cool Heat Pumps; Up to 2 Heat/2 Cool Conventional Systems	HEAT-OFF-COOL-AUTO-EM. HEAT	AUTO-ON-CIRC	R, Rc, W-O/B, W2-Aux/E. Y, Y2, G, C, K, L, U1, U2	Up to 3 Heat/2 Cool Heat Pumps; Up to 2 Heat/2 Cool Conventional Systems

Voice Control Wi-Fi 9000 Color Touchscreen

Honeywell's Wi-Fi 9000 allows remote access to the thermostat through a computer, tablet, or smartphone with Honeywell's Total Connect Comfort Service.

- Change temperature with Voice Control (English only)
- Get Connected – Connect to home's existing Wi-Fi network
- Remote Control – Convenience, comfort and control from anywhere through web, tablet or smartphone access
- App available for tablet and smartphones
- Automatic software updates through Wi-Fi
- Selectable to 7 Day or Non-Programmable
- Program thermostat locally or over the web or app
- Customize the screen color to match any décor

Display: Color Touchscreen
Display Size: 8.06 sq in.
Mounting: Horizontal
Color: Black
Changeover: Auto or Manual
Programmability: 7-Day Multiple Day Programming or Non-Programmable
Scheduling: On-line scheduling or Locally at thermostat
Setting Temperature Range: Heat: 40°F to 90°F; Cool: 50°F to 99°F (Heat: 4.5°C to 32°C; Cool: 10°C to 37°C)
Operating Temperature Range: 32°F to 120°F (0°C to 48.9°C)
Operating Humidity Range (% RH): 5 to 90% RH, non-condensing
Power Method: Hardwired
Supply Voltage: 18 to 30 Vac
Frequency: 50 Hz; 60 Hz
Dimensions: 3 1/2 in. High, 4 1/2 in. Wide, 7/8 in. Deep (88 mm. High, 115 mm. Wide, 22 mm. Deep)

Accessories:
THP2400A1027B/U – Black coverplate Assembly

Material Number	Applications	Terminal Designations	Stages	Switch Positions (System)	Switch Positions (Fan)	Electrical Ratings	Comments
TH9320WFV6007/U	Up to 3 Heat/2 Cool Heat Pumps; Up to 2 Heat/2 Cool Conventional Systems	R, RC, C, W (O/B), W2 (AUX/E), Y, Y2, G, L	Up to 3 Heat/2 Cool Heat Pump; Up to 2 Heat/2 Cool Conventional	HEAT-OFF-COOL-AUTO-EM.HEAT	AUTO-ON-CIRC-FOLLOW SCHEDULE	18 to 30 Vac	Tri-Lingual Display (selectable for English, French or Spanish)

Connected Thermostats

Wi-Fi 9000 Color Touchscreen

Honeywell's Wi-Fi 9000 allows remote access to the thermostat through a computer, tablet, or smartphone with Honeywell's Total Connect Comfort Service.

- Tri-lingual - English, French and Spanish display options.
- Get Connected – Connect to home's existing Wi-Fi network
- Remote Control – Convenience, comfort and control from anywhere through web, tablet or smartphone access
- Apps available for tablet and smartphones
- Automatic software updates through Wi-Fi
- Selectable to 7 Day or Non-Programmable
- Program thermostat locally or over the web or app
- Customize the screen color to match any décor

Applications: Up to 3 Heat/2 Cool Heat Pumps; Up to 2 Heat/2 Cool Conventional Systems
Display: Color Touchscreen
Display Size: 8.06 sq in.
Mounting: Horizontal
Color: Premier White®
Changeover: Auto or Manual
Stages: Up to 3 Heat/2 Cool Heat Pump; Up to 2 Heat/2 Cool Conventional
Scheduling: On-line scheduling or Locally at thermostat
Switch Positions (System): HEAT-OFF-COOL-AUTO-EM.HEAT
Switch Positions (Fan): AUTO-ON-CIRC-FOLLOW SCHEDULE
Setting Temperature Range: Heat: 40°F to 90°F; Cool: 50°F to 99°F (Heat: 4.5°C to 32°C; Cool: 10°C to 37°C)

Operating Temperature Range: 32°F to 120°F (0°C to 48.9°C)
Operating Humidity Range (% RH): 5 to 90% RH, non-condensing
Power Method: Hardwired
Supply Voltage: 18 to 30 Vac
Frequency: 50 Hz; 60 Hz
Electrical Ratings: 18 to 30 Vac
Dimensions: 3 1/2 in. High, 4 1/2 in. Wide, 7/8 in. Deep (88 mm. High, 115 mm. Wide, 22 mm. Deep)
Used With: THP9045 Wire Saver
Comments: Tri-Lingual Display (selectable for English, French or Spanish)

Accessories:
THP9045A1023/U – WireSaver

Material Number	Programmability	Terminal Designations
TH9320WF5003/U	7-Day Multiple Day Programming or Non-Programmable	R, RC, C, W (O/B), W2 (AUX/E), Y, Y2, G, L, K

Wi-Fi VisionPRO® 8000

Your customers want comfort, convenience and connectivity. With the Wi-Fi VisionPRO, you can offer them all three. Using an existing Wi-Fi network plus Honeywell's free Total Connect Comfort services, the Wi-Fi VisionPRO allows homeowners to remotely control their comfort settings and manage their energy costs – with ease.

- Intuitive programming for easier setup
- Remote comfort control via computer, tablet or smartphone
- Universal application across more system types
- Equipment check/change reminders
- Programmable for annual energy savings

Applications: Up to 3 Heat/2 Cool heat pump or up to 2 Heat/2 Cool conventional
Display Size: 10 sq in.
Color: Arctic White
Changeover: Auto or Manual
Stages: Up to 3 Heat / 2 Cool Heat Pump or Up to 2 Heat / 2 Cool Conventional
Switch Positions (System): HEAT-OFF-COOL-AUTO-EM.HEAT
Switch Positions (Fan): AUTO-ON-CIRC-FOLLOW SCHEDULE
Setting Temperature Range: Heat: 40°F to 90°F; Cool 50°F to 99°F (Heat: 4.5°C to 32.0°C; Cool: 10°C to 37.0°C)
Operating Temperature Range: 32°F to 120°F (0°C to 48.9°C)
Humidification Setting Range: Cooling: 40 to 80% RH. Heating: 10 to 60% RH.

Dehumidification Setting Range: 40 to 80% RH.
Operating Humidity Range (% RH): 5 to 90% RH, non-condensing
Power Method: Hardwired
Supply Voltage: 18 to 30 Vac or 750 mV
Frequency: 50 Hz; 60 Hz
Electrical Connections: Screw terminals
Electrical Ratings: 18 to 30 Vac or 750 mV
Dimensions: 4 5/8 in. High, 4 15/16 in. Wide, 1 1/8 in. Deep (118 mm. High, 126 mm. Wide, 29 mm. Deep)
Includes: Wi-Fi VisionPRO® 8000 thermostat

Accessories:
THP9045A1023/U – WireSaver

Material Number	Programmability	Terminal Designations
TH8321WF1001/U	7-Day Multiple Day Programming or Non-Programmable	R, RC, C, W-O/B, W2-AUX/E, Y, Y2, G, A-L/A, K, U1 U1, S1 S1

Prestige® 2-Wire IAQ Thermostat

THX9421R5021WW/U

The Prestige® IAQ thermostat is a 2 wire high definition color touch screen thermostat, 7 day programmable and selectable for residential or light commercial use. Controls up to 4-stages of heat and 2-stages of cool in a heat pump system and up to 3-stages of heat and 2-stages of cool in a conventional system.

- Control heating, cooling and IAQ equipment with only 2 wires at the thermostat. Heating, cooling and IAQ equipment wires to the Equipment Interface Module.
- Smart Schedule - programs in seconds for any lifestyle
- Patented interview based programming and installer setup.
- RedLINK™ wireless communication.
- Increase profit per job by including RedLINK™ accessories that provide comfort and convenience. RedLINK™ accessories include the RedLINK™ Internet Gateway, Portable Comfort Control (PCC), Wireless Outdoor Sensor, Wireless Indoor Sensor, Wireless Entry/Exit Remote, Wireless Vent and Filter Boost Remote, TrueSTEAM™ humidifier with Wireless Adapter and TrueZONE® zoning panel with Wireless Adapter.
- Selectable for residential and light commercial applications. Meets commercial code and is title 24 compliant.
- Light commercial - commercial language (occupied and unoccupied), schedule holidays and custom events, remote setback, economizer and time of day.
- Delta T Alerts and Diagnostics informs customers when their system is not performing as expected with instructions to contact the dealer. Provides a sense of security and greater comfort while generating repeat business.
- All Prestige® IAQ kits come standard with a return and discharge air temperature sensor to measure Delta T.
- Alerts and User Interactions Log - Keeps a searchable history of alerts and setting changes to the thermostat to determine if there is a system malfunction or if the issue was caused by user error. Saves time in troubleshooting and points the technician in the right direction.
- Performance Logs - Keeps a history of heating and cooling performance. The performance log includes Minimum and Maximum Delta T, Minimum and Maximum Discharge Temperature, Minimum and Maximum Return Temperature, Minimum and Maximum Indoor Temperature/Humidity, Minimum and Maximum Outdoor Temperature/Humidity and Run Time. Quickly determine if the system is performing as expected and reduces service time on the job.
- Customizable Service Reminders allow dealers to remind their customers when it's time to call for service, when their warranty is expiring and to provide customized alerts.
- USB port for transferring Installer Setup, Customizable Reminders, Custom Events and Holidays to multiple thermostats.
- USB port for adding the dealer's full color business logo on the screen.
- 3 assignable outputs to control humidification, dehumidification, ventilation and a stage of heating or cooling.
- 4 assignable inputs on the Equipment Interface Module can be used with wired outdoor, indoor or discharge sensors, occupancy sensor for remote setback and dry contact devices to trip pre-packaged or custom alerts such as a full drain pan or water leak.
- Extend wireless range of the Equipment Interface Module by connecting a THM4000R1000 Wireless Adapter to the ABCD terminals.
- Tri-lingual - English, French and Spanish display options.
- Precise temperature control (+/- 1°F) for reliable and consistent temperature.
- Multiple staging options to provide comfort or energy savings.

Applications: Up to 4 Heat/2 Cool Heat Pumps; Up to 3 Heat/2 Cool Conventional Systems
Display Size: 8.06 sq in.
Terminal Designations: R, °C then RedLINK to Equipment Interface Module
Changeover: Auto or Manual
Stages: Up to 4 Heat/2 Cool Heat Pumps; Up to 3 Heat/2 Cool Conventional Systems, See Equipment Interface Module
Programmability: 7-Day Multiple Day Programming or Non-Programmable
Switch Positions (System): HEAT-OFF-COOL-AUTO-EM.HEAT
Switch Positions (Fan): AUTO-ON-CIRC-FOLLOW SCHEDULE
Setting Temperature Range: Heat: 40°F to 90°F; Cool 50°F to 99°F (Heat: 4.5°C to 32.0°C; Cool: 10°C to 37.0°C)
Operating Temperature Range: 32°F to 120°F (0°C to 48.9°C)
Humidification Setting Range: Cooling: 40 to 80% RH. Heating: 10 to 60% RH.
Dehumidification Setting Range: 40 to 80% RH.
Operating Humidity Range (% RH): 5 to 90% RH, non-condensing
Power Method: Hardwired
Supply Voltage: 18 to 30 Vac
Frequency: 50 Hz; 60 Hz
Electrical Connections: Screw terminals
Electrical Ratings: 18 to 30 Vac
Dimensions: 3 1/2 in. High, 4 1/2 in. Wide, 7/8 in. Deep (88 mm. High, 115 mm. Wide, 22 mm. Deep)
External Sensors Available: N/A
Comments: Tri-Lingual Display (selectable for English, French or Spanish)

RED LINK™
Wireless Technology

Accessories:
THP2400A1027B/U – Black Coverplate assembly for use with the Prestige® 2-Wire IAQ Thermostat
YTHM5421R1010/U – Prestige® 2-Wire IAQ Equipment Interface Module Kit with 2 Duct Sensors
THM5421R1021/U – Prestige® 2-Wire IAQ Equipment Interface Module
THM6000R1002/U – RedLINK Internet Gateway
THM4000R1000/U – Wireless Adapter for use with RedLINK™ enabled thermostats and TrueZONE™ system
REM5000R1001/U – Portable Comfort Control
REM1000R1003/U – RedLINK Wireless Entry/Exit Remote
HVC20A1000/U – Wireless Vent and Filter Boost Remote
C7089R1013/U – Senses outdoor temperature and humidity
C7189R1004/U – Wireless Indoor Air Sensor. RedLINK™ enabled. Senses indoor temperature and humidity

Material Number	Color	Includes	Used With
THX9421R5021WW/U	Front: White, Side: White		THM5421R1021 Equipment Interface Module and RedLINK™ accessories
YTHX9421R5085WW/U	Front: White, Side: White	THX9421R5021WW Prestige® 2-Wire IAQ Thermostat, THM5421R1021 Equipment Interface Module and 2 Duct Sensors	RedLINK™ accessories
YTHX9421R5101WW/U	Front: White, Side: White	THX9421R5021WW Prestige® 2-Wire IAQ Thermostat, THM5421R1021 Equipment Interface Module, C7089R1013 Wireless Outdoor Sensor and 2 Duct Sensors	RedLINK™ accessories
YTHX9421R5127WW/U	Front: White, Side: White	THX9421R5021WW Prestige® 2-Wire IAQ Thermostat, THM5421R1021 Equipment Interface Module, THM6000R1002 RedLINK™ Internet Gateway and 2 Duct Sensors	RedLINK™ accessories

VisionPRO® 8000 with RedLINK™ technology

VisionPRO® 8000 with RedLINK™ technology is a touchscreen thermostat, 7 day programmable and selectable for residential or light commercial use. Controls up to 3-stages of heat and 2-stages of cool in a heat pump system and up to 2-stages of heat and 2-stages of cool in a conventional system.

- Thermostat works standalone or with the THM5421R1021 Equipment Interface Module or with the TrueZONE Wireless Adapter.
- Smart Schedule - programs in seconds for any lifestyle.
- Patented interview based programming and installer setup.
- RedLINK™ wireless communication.
- Increase profit per job by including RedLINK™ accessories that provide comfort and convenience. RedLINK™ accessories include the RedLINK™ Internet Gateway, Portable Comfort Control (PCC), Wireless Outdoor Sensor, Wireless Indoor Sensor, Wireless Entry/Exit Remote, Wireless Vent and Filter Boost Remote, TrueSTEAM™ humidifier with Wireless Adapter and TrueZONE® zoning panel with Wireless Adapter.
- Selectable for residential and light commercial applications. Meets commercial code and is title 24 compliant.
- Light commercial - commercial language (occupied and unoccupied), schedule holidays and custom events, remote setback, economizer and time of day. Remote Setback requires the THM5421R1021 Equipment Interface Module.

Applications: Up to 1 Heat/1 Cool heat pump or up to 1 Heat/1 Cool conventional
Display Size: 10 sq in.
Color: Arctic White
Changeover: Auto or Manual
Stages: Up to 4 Heat / 2 Cool Heat Pump or Up to 3 Heat / 2 Cool Conventional when used with the Equipment Interface Module.
Programmability: 7-Day Multiple Day Programming or Non-Programmable
Switch Positions (System): HEAT-OFF-COOL-AUTO
Switch Positions (Fan): AUTO-ON-CIRC-FOLLOW SCHEDULE
Setting Temperature Range: Heat: 40°F to 90°F; Cool 50°F to 99°F (Heat: 4.5°C to 32.0°C; Cool: 10°C to 37.0°C)
Operating Temperature Range: 32°F to 120°F (0°C to 48.9°C)
Operating Humidity Range (% RH): 5 to 90% RH, non-condensing
Power Method: Battery or Hardwired (must be battery powered when used on a millivolt system)
Supply Voltage: 18 to 30 Vac
Frequency: 50 Hz; 60 Hz
Electrical Connections: Screw terminals
Electrical Ratings: 18 to 30 Vac or 750 mV
Dimensions: 4 5/8 in. High, 4 15/16 in. Wide, 1 1/8 in. Deep (118 mm. High, 126 mm. Wide, 29 mm. Deep)
Used With: Works standalone or with optional THM5421R1021 Equipment Interface Module and RedLINK™ accessories

- Plain language setup, no manual needed.
- Alerts and User Interactions Log - Keeps a searchable history of alerts and setting changes to the thermostat to determine if there is a system malfunction or if the issue was caused by a user error. Saves time in troubleshooting and points the technician in the right direction. The Alert and User Interaction Logs are viewable on a computer after you download them from the thermostat to a microSD card.
- Customizable Service Reminders allow dealers to remind their customers when it's time to call for service, when their warranty is expiring and to provide customized alerts.
- MicroSD port for copying the Installer Setup, Customizable Reminders, Custom Events and Holidays to multiple thermostats.
- MicroSD port for adding the dealer's contact information on the screen.
- 1 assignable output on the TH8321 model to control humidification, dehumidification, ventilation or a stage of heating/cooling.
- 3 assignable outputs on the Equipment Interface Module to control humidification, dehumidification, ventilation or a stage of heating/cooling. The TH8110 and TH8320 models require the use of a Wireless Indoor Sensor to control humidification and dehumidification.
- 1 assignable input can be used with a wired outdoor, indoor or discharge sensor.
- 4 assignable inputs on the Equipment Interface Module can be used with wired outdoor, indoor or discharge sensors, occupancy sensor for remote setback and dry contact devices to trip pre-packaged or custom alerts such as a full drain pan or water leak.
- Extend wireless range of the Equipment Interface Module by connecting a THM4000R1000 Wireless Adapter to the ABCD terminals.
- Dual powered - battery or hardwired (C wire).
- Precise temperature control (+/- 1°F) for reliable and consistent temperature.
- Multiple staging options to provide comfort or energy savings.

RED LINK™
Wireless Technology

Accessories:
YTHM5421R1010/U – Prestige® 2-Wire IAQ Equipment Interface Module Kit with 2 Duct Sensors
THM5421R1021/U – Prestige® 2-Wire IAQ Equipment Interface Module
THM6000R1002/U – RedLINK Internet Gateway
THM4000R1000/U – Wireless Adapter for use with RedLINK™ enabled thermostats and TrueZONE™ system
REM1000R1003/U – RedLINK Wireless Entry/Exit Remote
HVC20A1000/U – Wireless Vent and Filter Boost Remote
C7089R1013/U – Senses outdoor temperature and humidity
C7189R1004/U – Wireless Indoor Air Sensor. RedLINK™ enabled. Senses indoor temperature and humidity
THP2400A1019/U – Coverplate assembly for use with the RedLINK™ VisionPRO®
REM5000R1001/U – Portable Comfort Control

Material Number	Terminal Designations	Stages (when used standalone)	Humidification Setting Range	Dehumidification Setting Range	Includes
TH8110R1008/U	R, RC, C, W-O/B, Y, G, K, S1 S1	Up to 1 Heat / 1 Cool Heat Pump or Up to 1 Heat / 1 Cool Conventional			VisionPRO® 8000 thermostat
TH8320R1003/U	R, RC, C, W-O/B, W2-AUX/E, Y, Y2, G, A-L/A, K, S1 S1	Up to 3 Heat / 2 Cool Heat Pump or Up to 2 Heat / 2 Cool Conventional			VisionPRO® 8000 thermostat
TH8321R1001/U	R, RC, C, W-O/B, W2-AUX/E, Y, Y2, G, A-L/A, K, U1 U1, S1 S1	Up to 3 Heat / 2 Cool Heat Pump or Up to 2 Heat / 2 Cool Conventional	Cooling: 40 to 80% RH. Heating: 10 to 60% RH.	40 to 80% RH.	VisionPRO® 8000 thermostat
YTH8321R1002/U	R, RC, C, W-O/B, W2-AUX/E, Y, Y2, G, A-L/A, K, U1 U1, S1 S1	Up to 3 Heat / 2 Cool Heat Pump or Up to 2 Heat / 2 Cool Conventional	Cooling: 40 to 80% RH. Heating: 10 to 60% RH.	40 to 80% RH.	TH8321R1001 VisionPRO® 8000 thermostat and THM6000R1002 RedLINK™ Internet Gateway

THM5421 Prestige® 2-Wire IAQ Comfort System Equipment Interface Module

THM5421 Equipment Interface Module for Prestige® IAQ and VisionPRO® 8000 with RedLINK™. Equipment Interface Module controls up to 4-stages of heat and 2-stages of cool in a heat pump system and up to 3-stages of heat and 2-stages of cool in a conventional system. Three sets of Universal IAQ contacts to control humidification, dehumidification, and ventilation. Four sensor inputs for wired sensors or dry contact devices.

Applications: Gas, oil, electric, heat pump, forced warm air, hot water, steam or gravity
Mounting: Vertical
Color: Gray
Operating Temperature Range: -40°F to 165°F (-40°C to 73.9°C)
Operating Humidity Range (% RH): 5 to 95% RH, non-condensing
Power Method: Hardwired
Supply Voltage: 18 to 30 Vac
Frequency: 50 Hz; 60 Hz
Electrical Connections: Screw terminals
Electrical Ratings: 18 to 30 Vac

Dimensions: 9 5/16 in. High, 4 13/16 in. Wide, 1 5/8 in. Deep (237.4 mm High, 122.5 mm Wide, 40.6 mm Deep)
Cool Current: 1.0 A running
Heat Current: 1.0 A running
Fan Current: 0.5A running

RED LINK™ Wireless Technology

Material Number	Terminal Designations	Stages	Includes	Used With
THM5421R1021/U	R, RC, RH, C, W-O/B, W2-AUX1, W3-AUX2, Y, Y2, G, A-L/A, U1, U1, U2, U2, U3, U3, S1, S1, S2, S2, S3, S3, S4, S4, A, B, C, D	Up to 4 Heat / 2 Cool Heat Pump or Up to 3 Heat / 2 Cool Conventional	THM5421R1021 Equipment Interface Module	All THX9421R5021 Prestige® 2-Wire IAQ Thermostats and all versions of Prestige® IAQ Thermostats and the VisionPRO® Thermostats with RedLINK™ technology.
YTHM5421R1010/U	R, RC, RH, C, W-O/B, W2-AUX1, W3-AUX2, Y, Y2, G, A-L/A, U1, U1, U2, U2, U3, U3, S1, S1, S2, S2, S3, S3, S4, S4, A, B, C, D	Up to 4 Heat / 2 Cool Heat Pump or Up to 3 Heat / 2 Cool Conventional	THM5421R1021 Equipment Interface Module and 2 Duct Sensors	All THX9421R5021 Prestige® 2-Wire IAQ Thermostats and all versions of Prestige® IAQ Thermostats and the VisionPRO® Thermostats with RedLINK™ technology.

7-Day Touchscreen Programmable Thermostat

Thermostat

- 7-day program schedules maximize comfort and economy.
- Armchair programming: Just pull thermostat from the wall to set schedules.
- Energy-saving settings for maximum cost savings.
- One-touch temp control overrides program schedule at any time.
- Precise comfort control keeps temperature within 1°F of the level you set.
- Change/check reminders let you know when to service or replace filters, batteries and other critical components.
- Large touchscreen display with backlight is easy to read – even in the dark.
- Select models accommodate optional outdoor or indoor remote sensors.

Display Size: 10 sq in.
Terminal Designations: R, RC, W-O/B, Y, G, C, W2-Aux, Y2/E, L, S1, S2
Mounting: Horizontal
Color: Premier White®
Changeover: Auto/Manual Selectable
Stages: Up to 2 Heat/2 Cool Conventional; Up to 2 Heat/1 Cool Heat Pump
Programmability: 7 Day Multiple Day Programming or Non-Programmable
Switch Positions (System): HEAT-OFF-COOL-AUTO-EM.HEAT
Switch Positions (Fan): AUTO-ON-CIRC
Differential Temperature: ± 1°F (±0.5°C)

Operating Humidity Range (% RH): 5 to 90% RH, non-condensing
Power Method: Battery or Hardwired
Frequency: 50 Hz; 60 Hz
Electrical Ratings: 20 to 30 Vac or 750 mV
Dimensions: 3-3/4 in. high x 6 in. wide x 1-3/8 in. deep (99 mm high x 152 mm wide x 35 mm deep)
Sensor Element: Thermistor
Cool Current: 1.0 A running
Heat Current: 1.0 A running
Fan Current: 0.6A running
Comments: Selectable: Programmable or Non-Programmable; The L terminal is an input or output.

Material Number	Applications	Setting Temperature Range
TH7220U1035/U	Heat/Cool or Heat Pump with Auxiliary Heat	Heat: 40°F to 90°F; Cool: 50°F to 99°F (Heat: 4.5°C to 32°C; Cool: 10°C to 37°C)

Z-Wave Touch Screen Programmable Thermostat

Honeywell's VisionPRO Z-Wave offers you top-of-the-line features like touchscreen interation, a real-time clock, and a large, easy-to-read backlit display to easily integrate comfort control into your automated home. You'll enjoy the convenience, energy savings and consistent comfort for years to come.

Color: Premier White®
Changeover: Auto or Manual
Electrical Ratings: 18 to 30 Vac

Material Number	Programmability	Terminal Designations
YTH8320ZW1007/U	Universal Programming from 7 Day to Non-Programmable	R, RC, C, W-O/B, W2-E/Aux, Y, Y2, G, L, K

FocusPRO® 6000 Wireless Thermostat

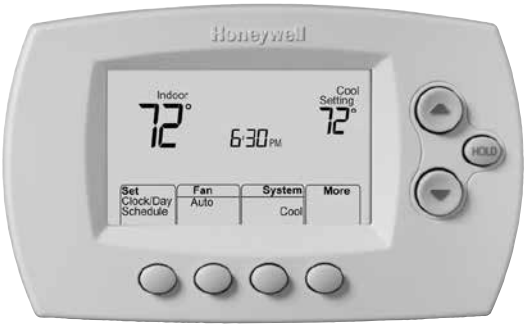

Honeywell's FocusPRO® 6000 digital thermostat offers the perfect blend of features, performance, energy savings and value. With the largest backlit screen in its class, the FocusPRO 6000 prominently displays both room and set temperature.

- Selectable to 5-1-1 (Weekdays, Saturday, Sunday) or 5-2 (Weekdays, Weekend) programmable thermostat.
- Large, clear, backlit display - easy to read in various lighting conditions.
- Precise comfort control (+/-1°F) - maintains consistent comfort to the highest level of accuracy.
- Simplified programming and operation.
- Easy change battery door - flip out door allows for easy battery replacement without removing or disassembling the thermostat.
- Built in instructions - simple, pull out instruction manual.
- Adaptive Intelligent Recovery™ - ensures programmed temperature is reached by programmed time.
- Temperature range stops - prevents user from setting the temperature too high or too low.

Applications: Gas, oil, electric, heat pump, forced warm air, hot water, steam or gravity
Mounting: Horizontal
Color: Premier White®
Changeover: Auto/Manual Selectable
Programmability: 5-1-1 Day Program or 5-2 Day Program
Setting Temperature Range: Heat: 40°F to 90°F; Cool: 50°F to 99°F (Heat: 4.5°C to 32°C; Cool: 10°C to 37°C)
Differential Temperature: ± 1°F (±0.5°C)
Operating Temperature Range: 32°F to 120°F (0°C to 48.9°C)
Operating Humidity Range (% RH): 5 to 90% RH, non-condensing
Power Method: Battery
Dimensions: 3 9/16 in. High X 5 13/16 in. Wide X 1 1/2 in. Deep (91 mm High X 147 mm Wide X 38 mm Deep)
Sensor Element: Thermistor
Comments: Thermostat is also available in kits for zoned and non-zoned systems

REDLINK Wireless Technology

Accessories:
REM5000R1001 – Portable Comfort Control uses RedLINK™ to sense and control room temperature anywhere in the home. Works in both zoned and non-zoned applications.
C7089R1013 – Senses outdoor temperature and humidity to display on RedLINK™ enabled thermostats and accessories.
C7735A1000 – Mount on return duct for backup control of non-zoned RedLINK™ enabled wireless systems. Works with the EIM to maintain safe indoor temperatures if power is lost at the wireless thermostat.
50002883-001 – FocusPRO 5000/6000 and PRO 3000/4000 Cover Plate Assembly
50007298-001 – 12 pack of medium coverplates (5 in. x 6 7/8 in.)

Replacement Parts:
50007072-001 – Replacement Battery Holder for FocusPRO TH5220, TH5320, TH6110, TH6220, and TH6320 Thermostat

Material Number	Switch Positions (System)	Switch Positions (Fan)	Stages	Parts Needed for Operation (not included) - TrueZONE™ System	Parts Needed for Operation (not included) - Non-Zoned System
TH6320R1004/U	HEAT-OFF-COOL-AUTO-EM.HEAT	AUTO-ON	Up to 3 Heat / 2 Cool Heat Pump or Up to 2 Heat / 2 Cool Conventional	HZ432 or HZ322 TrueZONE™ panel; THM4000R1000 Wireless Adapter	THM5320R1000 Equipment Interface Module

Wireless Thermostat Kits

Everything you need to relocate or upgrade with a non-programmable thermostat without running new wires. Kit options include wireless outdoor sensor, RedLINK Internet Gateway for remote access, or wireless adapters for working with TrueZONE panels.

- WIRELESS FOCUSPRO® THERMOSTAT: Same great features of the FocusPRO® thermostat - now wireless. Installs in minutes. Displays outdoor temperature and humidity. 1 year battery life. 2 month low battery warning. Dual Fuel enabled.
- EQUIPMENT INTERFACE MODULE (EIM): All HVAC equipment is wired to the module. Module receives communication from the wireless devices.
- RETURN AIR SENSOR: Works with the Equipment Interface Module to maintain safe indoor temperatures if power is lost at the wireless thermostat. Maintains 62°F for heating and 82°F for cooling.
- REDLINK™ WIRELESS TECHNOLOGY: Powered by RedLINK™ reliability. No interference with other wireless devices in the home.

Applications: Gas, oil, electric, heat pump, forced warm air, hot water, steam or gravity
Changeover: Auto/Manual Selectable
Stages: Up to 3 Heat / 2 Cool Heat Pump or Up to 2 Heat / 2 Cool Conventional
Switch Positions (System): HEAT-OFF-COOL-AUTO-EM.HEAT
Switch Positions (Fan): AUTO-ON
Electrical Ratings: Equipment Interface Module – 18 to 30 Vac, 50 Hz; 60 Hz
Cool Current: 1.0 A running
Heat Current: 1.0 A running
Fan Current: 0.6 A running

RED LINK™
Wireless Technology

Accessories:
50002883-001 – FOCUSPRO® 5000/6000 and PRO 3000/4000 and Horizontal PRO 1000/2000 Cover Plate Assembly
50007298-001 – 12 pack of medium coverplates (5 in. x 6 7/8 in.)
C7089R1013 – Senses outdoor temperature and humidity to display on RedLINK™ enabled thermostats and accessories.
REM5000R1001 – Use the Portable Comfort Control anywhere in the home to experience a new level of comfort and convenience.

Replacement Parts:
50007072-001 – Replacement Battery Holder for FocusPRO TH5220, TH5320, TH6110, TH6220, and TH6320 Thermostat

Material Number	Description	Terminal Designations	Programmability	Power Method	Includes
YTH5320R1000/U	Wireless Thermostat Kit. RedLINK™ Enabled. Up to 3H/2C Heat Pump or Up to 2H/2C Conventional. Kit includes Wireless FocusPRO® Non-Programmable Thermostat, Equipment Interface Module and Return Air Sensor.	C, R, Rc, Rh, W-O/B, W2-Aux/E, Y, Y2, G, L, RAS		Thermostat-Battery	C7735A1000 Return Air Sensor; THM5320R1000 Equipment Interface Module; TH5320R1002 Wireless FocusPRO® Non-Programmable Thermostat
YTH6320R1001/U	Wireless Thermostat Kit. RedLINK™ Enabled. Up to 3H/2C Heat Pump or Up to 2H/2C Conventional. Kit includes Wireless FocusPRO® 5-1-1 Programmable Thermostat, Equipment Interface Module and Return Air Sensor.	C, R, Rc, Rh, W-O/B, W2-Aux/E, Y, Y2, G, L, RAS	5-1-1 Day Program or 5-2 Day Program	Thermostat-Battery	C7735A1000 Return Air Sensor; THM5320R1000 Equipment Interface Module; TH6320R1004 Wireless FocusPRO® 5-1-1 Programmable Thermostat
YTH6320R1114/U	Everything you need to relocate thermostat or upgrade equipment without running new wires.	C, R, Rc, Rh, W-O/B, W2-Aux/E, Y, Y2, G, L, RAS	5-1-1 Day Program or 5-2 Day Program	Battery (Thermostat)	C7735A1000 Return Air Sensor|THM5320R1000 Equipment Interface Module|TH6320R1004 Wireless FocusPRO® 5-1-1 Programmable Thermostat|THM6000R1002 RedLINK Internet Gateway

THM5320 Equipment Interface Module

Easily relocate thermostat or upgrade equipment without running new wires using this module and a wireless FocusPRO® thermostat.

- Powered by RedLINK™ reliability
- No interference with other wireless devices in the home
- Works with TH6320R1004 or TH5320R1002 Wireless FocusPRO® thermostats
- Input for Return Air Sensor
- Quick-connect terminal blocks
- LEDs for power and system status

Applications: Gas, oil, electric, heat pump, forced warm air, hot water, steam or gravity
Color: Gray
Operating Temperature Range: -40°F to 165°F (-40°C to 73.9°C)
Operating Humidity Range (% RH): 5 to 95% RH, non-condensing
Supply Voltage: 18 to 30 Vac
Electrical Ratings: 18 to 30 Vac, 50/60 Hz
Dimensions: 8 1/8 in. high x 8 in. wide x 1 7/8 in. deep (206 mm high x 203 mm wide x 47 mm deep)
Cool Current: 1.0 A running
Heat Current: 1.0 A running
Fan Current: 0.6 A running

Accessories:
C7735A1000 – Mount on return duct for backup control of non-zoned RedLINK™ enabled wireless systems. Works with the EIM to maintain safe indoor temperatures if power is lost at the wireless thermostat.
C7089R1013 – Senses outdoor temperature and humidity to display on RedLINK™ enabled thermostats and accessories.
REM5000R1001 – Portable Comfort Control uses RedLINK™ to sense and control room temperature anywhere in the home. Works in both zoned and non-zoned applications.
THM6000R1002 – RedLINK Internet Gateway

Material Number	Terminal Designations	Stages	Description	Part Neededs for Operation (not included)	Comments
THM5320R1000/U	C, R, Rc, Rh, W-O/B, W2-Aux/E, Y, Y2, G, L, RAS	Up to 3 Heat/2 Cool Heat Pump or Up to 2 Heat/2 Cool Conventional	RF Equipment Interface Module. Controls up to 3 heat / 2 cool heat pump systems or up to 2 heat / 2 cool conventional systems when used with the Wireless FocusPRO® Thermostat. RedLINK™ Enabled.	TH6320R1004 or TH5320R1002 Wireless FocusPRO® Thermostat	Equipment Interface Module is also available in kits

Programmable WiFi FocusPRO®

Honeywell's Wi-Fi FocusPRO® 6000 allows remote access to the thermostat through a computer, tablet, or smartphone with Honeywell's Total Connect Comfort Service.

- Homeowners can monitor and control their home's comfort settings from anywhere at anytime.
- Connect using a regular computer, tablet or smartphone.
- Automatic software updates through Wi-Fi.
- Selectable to 7-Day or Non-programmable thermostat.
- Large, clear, backlit display - easy to read in various lighting conditions.
- Precise comfort control (±1°F) - maintains consistent comfort to the highest level of accuracy.
- Simplified programming and operation.
- Built in instructions - simple, pull out instruction manual.
- Adaptive Intelligent Recovery™ – ensures programmed temperature is reached by programmed time.
- Temperature range stops - prevents user from setting the temperature too high or too low.

Applications: Up to 3 Heat/2 Cool Heat Pumps; Up to 2 Heat/2 Cool Conventional Systems
Display Size: Large display size 5.09 sq. in.
Mounting: Horizontal
Color: Premier White®
Changeover: Auto/Manual Selectable
Programmability: 7-Day Program
Differential Temperature: ± 1°F (±0.5°C)
Operating Humidity Range (% RH): 5 to 90% RH, non-condensing
Power Method: Hardwired
Supply Voltage: 20 to 30 Vac
Frequency: 50 Hz; 60 Hz

Electrical Ratings: 20 to 30 Vac
Dimensions: 3 9/16 in. High X 5 13/16 in. Wide X 1 1/2 in. Deep (91 mm High X 147 mm Wide X 38 mm Deep)
Sensor Element: Thermistor
Cool Current: Y = 0.02 A to 1.0 A running, Y2 = 0.02 A to 1.0 A running
Heat Current: W2 (AUX/E) = 0.02 A to 0.5 A running; W = 0.02 A to 1.0 A running
Comments: Large display size 5.09 sq. in.

Accessories:
THP9045A1023/U – WireSaver

Material Number	Switch Positions (System)	Switch Positions (Fan)	Terminal Designations	Stages	Setting Temperature Range
TH6320WF1005/U	HEAT-OFF-COOL-AUTO-EM.HEAT	AUTO-ON	Rc, R, W (O/B), W2 (AUX/E), Y, Y2, G, C, K	Up to 3 Heat / 2 Cool Heat Pump or Up to 2 Heat / 2 Cool Conventional	Heat: 40°F to 90°F; Cool: 50°F to 99°F (Heat: 4.5°C to 32°C; Cool: 10°C to 37°C)

FocusPRO® 6000 5-1-1 Day Programmable Thermostat

Standard Display

Large Display

Honeywell's FocusPRO® 6000 digital thermostat offers the perfect blend of features, performance, energy savings and value. With the largest backlit screen in its class, the FocusPRO 6000 prominently displays both room and set temperature.

- Selectable to 5-1-1 (Weekdays, Saturday, Sunday) or 5-2 (Weekdays, Weekend) programmable thermostat.
- Large, clear, backlit display - easy to read in various lighting conditions.
- Display size options - available in large screen or standard.
- Precise comfort control (+/-1°F) - maintains consistent comfort to the highest level of accuracy.
- Simplified programming and operation.
- Easy change battery door - flip out door allows for easy battery replacement without removing or disassembling the thermostat.
- Built in instructions - simple, pull out instruction manual.
- Adaptive Intelligent Recovery™ - ensures programmed temperature is reached by programmed time.
- Temperature range stops - prevents user from setting the temperature too high or too low.

Display Size: N/A
Mounting: Horizontal
Color: Premier White®
Changeover: Auto/Manual Selectable
Programmability: 5-1-1 Day Program or 5-2 Day Program
Switch Positions (Fan): AUTO-ON
Setting Temperature Range: Heat: 40°F to 90°F; Cool: 50°F to 99°F (Heat: 4.5°C to 32°C; Cool: 10°C to 37°C)
Operating Humidity Range (% RH): 5 to 90% RH, non-condensing
Power Method: Battery or Hardwired (must be battery powered when used on a millivolt system)
Supply Voltage: 20 to 30 Vac
Frequency: 50 Hz; 60 Hz
Electrical Ratings: 20 to 30 Vac or 750 mV

Dimensions: 3 9/16 in. High X 5 13/16 in. Wide X 1 1/2 in. Deep (91 mm High X 147 mm Wide X 38 mm Deep)
Fan Current: 0.02 A to 0.5 A running

Accessories:
50002883-001 – FocusPRO 5000/6000 and PRO 3000/4000 and Horizontal PRO 1000/2000 Cover Plate Assembly
50007298-001 – 12 pack of medium coverplates (5 in. x 6 7/8 in.)

Replacement Parts:
50007072-001 – Replacement Battery Holder for FocusPRO TH5220, TH5320, TH6110, TH6220, and TH6320 Thermostat

Material Number	Description	Applications	Terminal Designations	Stages	Switch Positions (System)	Differential Temperature	Sensor Element	Cool Current	Heat Current	Comments
TH6110D1021/U	1 heat/1 cool conventional and heat pump programmable thermostat with R, Rc, C, W (O/B), Y and G terminals. Large Display.	Heat/Cool or Heat Pump without Auxiliary Heat	Rc, R, W (O/B), Y, G, C	Up to 1 Heat/1 Cool	HEAT-OFF-COOL-AUTO	± 1°F (±0.5°C)	Thermistor	0.02 A to 1.0 A running	0.02 A to 1.0 A running	Large display size 5.09 sq. in.
TH6220D1028/U	5-1-1 Programmable Thermostat	Heat/Cool or Heat Pump with Auxiliary Heat	R, RC, C, W-O/B, G, Y, W2-AUX/E, Y2-L	Up to 2 Heat/2 Cool Conventional; Up to 2 Heat/1 Cool Heat Pump	HEAT-OFF-COOL-AUTO-EM. HEAT			Y = 0.02 A to 1.0 A running, Y2 = 0.02 A to 1.0 A running	W = 0.02 A to 1.0 A running; W2 (AUX) = 0.02 A to 0.5 A running; E = 0.02 A to 1.0 A running	Large display size 5.09 sq. in.
TH6320U1000/U	5-1-1 Programmable Thermostat	Heat/Cool or Heat Pump with Auxiliary Heat	Rc, R, W (O/B), W2 (AUX/E), Y, Y2, G, L, C	Up to 3 Heat / 2 Cool Heat Pump or Up to 2 Heat / 2 Cool Conventional	HEAT-OFF-COOL-AUTO-EM. HEAT			Y = 0.02 A to 1.0 A running, Y2 = 0.02 A to 1.0 A running	W2 (AUX/E) = 0.02 A to 0.5 A running; W = 0.02 A to 1.0 A running	Large display size 5.09 sq. in.

PRO 4000 5-2 Day Programmable Thermostat

Standard Model

Model includes Emergency Heat

The PRO programmable family of thermostats offers a basic thermostat with the benefits of energy savings. PRO 4000 features an easy-to-read display and 5-2 day programming. Best of all, it's backed by the Honeywell name.

- Weekday/Weekend programming – 5-2 (Weekdays, Weekend) programming
- Backlit digital display – both current and set temperatures are easy to read in various lighting conditions
- Precise comfort control [±1°F (± 0.5°C)] - maintains consistent comfort to the highest level of accuracy
- Basic operation – easy-to-use slide switches allow you to select the heat or cool mode, and operate the fan
- Built in instructions – simple, pull out instruction manual
- Adaptive Intelligent Recovery™ - ensures programmed temperature is reached by programmed time

Display Size: 1.73 sq in.
Mounting: Horizontal
Color: Premier White®
Changeover: Manual
Programmability: 5-2 Day Program
Setting Temperature Range: Heat: 40°F to 90°F; Cool: 50°F to 99°F (Heat: 4.5°C to 32°C; Cool: 10°C to 37°C)
Differential Temperature: ± 1°F (±0.5°C)
Operating Humidity Range (% RH): 5 to 90% RH, non-condensing
Power Method: Dual Powered: Battery or Hardwire (must be battery powered when used on a millivolt system)
Supply Voltage: 20 to 30 Vac

Frequency: 50 Hz; 60 Hz
Electrical Ratings: 20 to 30 Vac or 750 mV
Dimensions: 3 13/16 in. High X 5 3/8 in. Wide X 1 1/4 in. Deep (97 mm High X 137 mm Wide X 32 mm Deep)
Sensor Element: Thermistor
Cool Current: 0.02 A to 1.0 A running
Heat Current: 0.02 A to 1.0 A running

Accessories:
50002883-001 – FocusPRO 5000/6000 and PRO 3000/4000 and Horizontal PRO 1000/2000 Coverplate Assembly
50007298-001 – 12 pack of medium coverplates (5 in. x 6 7/8 in.)

Material Number	Applications	Switch Positions (System)	Switch Positions (Fan)	Terminal Designations	Stages
TH4110D1007/U	Heat/Cool or Heat Pump without Auxiliary Heat	HEAT-OFF-COOL	AUTO-ON	R, Rc, W, Y, G, O, B, C	1 Heat/1 Cool
TH4210D1005/U	Heat Pump Systems	HEAT-OFF-COOL-EM. HT	AUTO-ON	R, Y, AUX, E, G, O, B, L, C	2 Heat/1 Cool Heat Pump

PRO 2000 Horizontal Programmable Thermostats

Standard Model

Model includes Emergency Heat

The PRO programmable family of thermostats offers a basic thermostat with the benefits of energy savings. The PRO features an easy-to-read display and 5-2 day programming. Best of all, it's backed by the Honeywell name.

- Weekday/Weekend programming – 5-2 (Weekdays, Weekend) programming
- Backlit digital display – both current and set temperatures are easy to read in various lighting conditions
- Precise comfort control [±1°F (±0.5°C)] – maintains consistent comfort to the highest level of accuracy
- Basic operation – easy-to-use slide switches allow you to select the heat or cool mode, and operate the fan
- Adaptive Intelligent Recovery™ – ensures programmed temperature is reached by programmed time

Display Size: 1.73 sq in.
Mounting: Horizontal
Color: Premier White®
Changeover: Manual
Programmability: 5-2 Day Program
Setting Temperature Range: Heat: 40°F to 90°F; Cool: 50°F to 99°F (Heat: 4.5°C to 32°C; Cool: 10°C to 37°C)
Power Method: Dual Powered: Battery or Hardwire
Frequency: 50 Hz; 60 Hz

Dimensions: 3 7/16 High x 4 10/16 Wide x 1 3/16 Deep (87mm High x 119mm Wide x 30mm Deep)
Cycles per Hour: Heating 2 - 6 CPH; Cooling 2 - 6 CPH
Cool Current: 0.02 A to 1.0 A running
Heat Current: 0.02 A to 1.0 A running

Accessories:
50002883-001 – FocusPRO 5000/6000 and PRO 3000/4000 and Horizontal PRO 1000/2000 Cover Plate Assembly

Material Number	Applications	Switch Positions (System)	Switch Positions (Fan)	Terminal Designations	Operating Humidity Range (% RH)	Electrical Ratings	Stages
TH2110DH1002/U	Heat/Cool or Heat Pump without Auxiliary Heat	HEAT-OFF-COOL	AUTO-ON	R, RC, C, W, Y, G, O, B	5 to 90% RH, non-condensing	20 to 30 Vac or 750 mV	1 Heat/1 Cool
TH2210DH1000/U	Heat Pump Systems	HEAT-OFF-COOL-EM. HT	AUTO-ON	R, C, Y, AUX/E, G, O, B		20 to 30 Vac	2 Heat/1 Cool Heat Pump

PRO 2000 Vertical Programmable Thermostats

Standard Model

Model includes Emergency Heat

The PRO programmable family of thermostats offers a basic thermostat with the benefits of energy savings. The PRO features an easy-to-read display and 5-2 day programming. Best of all, it's backed by the Honeywell name.

- Weekday/Weekend programming – 5-2 (Weekdays, Weekend) programming
- Backlit digital display – both current and set temperatures are easy to read in various lighting conditions
- Precise comfort control [±1°F (±0.5°C)] – maintains consistent comfort to the highest level of accuracy
- Basic operation – easy-to-use slide switches allow you to select the heat or cool mode, and operate the fan
- Adaptive Intelligent Recovery™ – ensures programmed temperature is reached by programmed time

Display Size: 1.73 sq in.
Mounting: Vertical
Color: Premier White®
Changeover: Manual
Programmability: 5-2 Day Program
Setting Temperature Range: Heat: 40°F to 90°F; Cool: 50°F to 99°F (Heat: 4.5°C to 32°C; Cool: 10°C to 37°C)

Power Method: Dual Powered: Battery or Hardwire
Frequency: 50 Hz, 60 Hz
Dimensions: 4 11/16 in. High X 2 7/8 in. Wide X 1 1/8 in. Deep (120 mm high x 74 mm wide x 28 mm deep)
Cycles per Hour: Heating 2 - 6 CPH; Cooling 2 -6 CPH
Cool Current: 0.02 A to 1.0 A running
Heat Current: 0.02 A to 1.0 A running

Material Number	Applications	Switch Positions (System)	Switch Positions (Fan)	Terminal Designations	Operating Humidity Range (% RH)	Electrical Ratings	Stages
TH2110DV1008/U	Heat/Cool or Heat Pump without Auxiliary Heat	HEAT-OFF-COOL	AUTO-ON	R, RC, C, W, Y, G, O, B	5 to 90% RH, non-condensing	20 to 30 Vac or 750 mV	1 Heat/1 Cool
TH2210DV1006/U	Heat Pump Systems	HEAT-OFF-COOL-EM. HT	AUTO-ON	R, C, Y, AUX/E, G, O, B	5 to 90% RH, non-condensing	20 to 30 Vac	2 Heat/1 Cool Heat Pump

FocusPRO® 5000 Wireless Thermostat

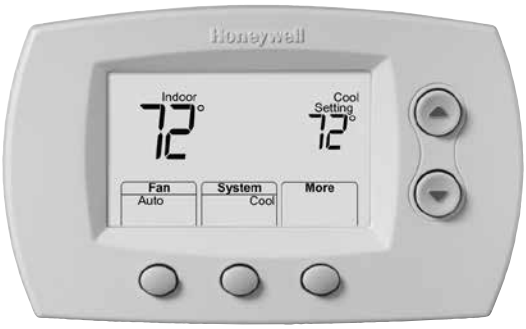

Honeywell's FocusPRO® 5000 digital thermostat offers the perfect blend of features, performance, energy savings and value. With the largest backlit screen in its class, the FocusPRO 5000 prominently displays both room and set temperature.

- Powered by RedLINK™ reliability
- No interference with other wireless devices in the home
- Works with compatible RedLINK™ enabled devices
- Same great features of the FocusPRO thermostat now wireless
- Installs in minutes
- Can display outdoor temperature and humidity
- 1 year battery life
- 2 month low battery warning
- Dual Fuel enabled – requires THM5320R1000 Equipment Interface Module and C7089R1013 Wireless Outdoor Sensor (sold separately)

Applications: Gas, oil, electric, heat pump, forced warm air, hot water, steam or gravity
Mounting: Horizontal
Color: Premier White®
Changeover: Auto/Manual Selectable
Setting Temperature Range: Heat: 40°F to 90°F; Cool: 50°F to 99°F (Heat: 4.5°C to 32°C; Cool: 10°C to 37°C)
Differential Temperature: ± 1°F (±0.5°C)
Operating Temperature Range: 32°F to 120°F (0°C to 48.9°C)
Operating Humidity Range (% RH): 5 to 90% RH, non-condensing
Power Method: Battery
Dimensions: 3 9/16 in. High X 5 13/16 in. Wide X 1 1/2 in. Deep (91 mm High X 147 mm Wide X 38 mm Deep)
Sensor Element: Thermistor
Comments: Thermostat is also available in kits for zoned and non-zoned systems

Accessories:
REM5000R1001 – Portable Comfort Control uses RedLINK™ to sense and control room temperature anywhere in the home. Works in both zoned and non-zoned applications.
C7089R1013 – Senses outdoor temperature and humidity to display on RedLINK™ enabled thermostats and accessories.
C7735A1000 – Mount on return duct for backup control of non-zoned RedLINK™ enabled wireless systems. Works with the EIM to maintain safe indoor temperatures if power is lost at the wireless thermostat.
50002883-001 – FocusPRO 5000/6000 and PRO 3000/4000 and Horizontal PRO 1000/2000 Cover Plate Assembly
50007298-001 – 12 pack of medium coverplates (5 in. x 6 7/8 in.)

Replacement Parts:
50007072-001 – Replacement Battery Holder for FocusPRO TH5220, TH5320, TH6110, TH6220, and TH6320 Thermostat

Material Number	Switch Positions (System)	Switch Positions (Fan)	Stages	Parts Needed for Operation (not included) - TrueZONE™ System	Parts Needed for Operation (not included) - Non-Zoned System
TH5320R1002/U	HEAT-OFF-COOL-AUTO-EM.HEAT	AUTO-ON	Up to 3 Heat / 2 Cool Heat Pump or Up to 2 Heat / 2 Cool Conventional	HZ432 or HZ322 TrueZONE™ panel; THM4000R1000 Wireless Adapter	THM5320R1000 Equipment Interface Module

Wireless Thermostat Kits

Everything you need to relocate or upgrade with a non-programmable thermostat without running new wires. Kit options include wireless outdoor sensor, RedLINK Internet Gateway for remote access, or wireless adapters for working with TrueZONE panels.

- WIRELESS FOCUSPRO® THERMOSTAT: Same great features of the FocusPRO® thermostat - now wireless. Installs in minutes. Displays outdoor temperature and humidity. 1 year battery life. 2 month low battery warning. Dual Fuel enabled.
- EQUIPMENT INTERFACE MODULE (EIM): All HVAC equipment is wired to the module. Module receives communication from the wireless devices.
- RETURN AIR SENSOR: Works with the Equipment Interface Module to maintain safe indoor temperatures if power is lost at the wireless thermostat. Maintains 62°F for heating and 82°F for cooling.
- REDLINK™ WIRELESS TECHNOLOGY: Powered by RedLINK™ reliability. No interference with other wireless devices in the home.

Applications: Gas, oil, electric, heat pump, forced warm air, hot water, steam or gravity
Changeover: Auto/Manual Selectable
Stages: Up to 3 Heat / 2 Cool Heat Pump or Up to 2 Heat / 2 Cool Conventional
Switch Positions (System): HEAT-OFF-COOL-AUTO-EM.HEAT
Switch Positions (Fan): AUTO-ON
Electrical Ratings: Equipment Interface Module – 18 to 30 Vac, 50 Hz; 60 Hz
Cool Current: 1.0 A running
Heat Current: 1.0 A running
Fan Current: 0.6 A running

REDLINK™
Wireless Technology

Accessories:
50002883-001 – FOCUSPRO® 5000/6000 and PRO 3000/4000 and Horizontal PRO 1000/2000 Cover Plate Assembly
50007298-001 – 12 pack of medium coverplates (5 in. x 6 7/8 in.)
C7089R1013 – Senses outdoor temperature and humidity to display on RedLINK™ enabled thermostats and accessories.
REM5000R1001 – Use the Portable Comfort Control anywhere in the home to experience a new level of comfort and convenience.

Replacement Parts:
50007072-001 – Replacement Battery Holder for FocusPRO TH5220, TH5320, TH6110, TH6220, and TH6320 Thermostat

Material Number	Description	Terminal Designations	Programmability	Power Method	Includes
YTH5320R1000/U	Wireless Thermostat Kit. RedLINK™ Enabled. Up to 3H/2C Heat Pump or Up to 2H/2C Conventional. Kit includes Wireless FocusPRO® Non-Programmable Thermostat, Equipment Interface Module and Return Air Sensor.	C, R, Rc, Rh, W-O/B, W2-Aux/E, Y, Y2, G, L, RAS		Thermostat-Battery	C7735A1000 Return Air Sensor; THM5320R1000 Equipment Interface Module; TH5320R1002 Wireless FocusPRO® Non-Programmable Thermostat
YTH6320R1001/U	Wireless Thermostat Kit. RedLINK™ Enabled. Up to 3H/2C Heat Pump or Up to 2H/2C Conventional. Kit includes Wireless FocusPRO® 5-1-1 Programmable Thermostat, Equipment Interface Module and Return Air Sensor.	C, R, Rc, Rh, W-O/B, W2-Aux/E, Y, Y2, G, L, RAS	5-1-1 Day Program or 5-2 Day Program	Thermostat-Battery	C7735A1000 Return Air Sensor; THM5320R1000 Equipment Interface Module; TH6320R1004 Wireless FocusPRO® 5-1-1 Programmable Thermostat
YTH6320R1114/U	Everything you need to relocate thermostat or upgrade equipment without running new wires.	C, R, Rc, Rh, W-O/B, W2-Aux/E, Y, Y2, G, L, RAS	5-1-1 Day Program or 5-2 Day Program	Battery (Thermostat)	C7735A1000 Return Air Sensor|THM5320R1000 Equipment Interface Module|TH6320R1004 Wireless FocusPRO® 5-1-1 Programmable Thermostat|THM6000R1002 RedLINK Internet Gateway

FocusPRO® 5000 Digital Non-Programmable Thermostats

TH5110 Large Display

TH5220 Large Display

Honeywell's FocusPRO® 5000 digital thermostat offers the perfect blend of features, performance, energy savings and value. With the largest backlit screen in its class, the FocusPRO 5000 prominently displays both room and set temperature.

- Non-programmable digital thermostat.
- Large, clear, backlit display - easy to read in various lighting conditions.
- Display size options - available in large screen or standard.
- Precise comfort control (± 1°F) - maintains consistent comfort to the highest level of accuracy.
- Easy change battery door - flip out door allows for easy battery replacement without removing or disassembling the thermostat.
- Up to 3 Heat/2 Cool Heat Pump or Up to 2 Heat/2 Cool Conventional.
- Dual-powered (battery and/or hardwire).

Mounting: Horizontal
Color: Premier White®
Changeover: Auto/Manual Selectable
Switch Positions (Fan): AUTO-ON
Setting Temperature Range: Heat: 40°F to 90°F; Cool: 50°F to 99°F (Heat: 4.5°C to 32°C; Cool: 10°C to 37°C)
Accuracy: ±1°F (± 0.5°C)
Operating Humidity Range (% RH): 5 to 90% RH, non-condensing
Power Method: Dual Powered: Battery or Hardwire (must be battery powered when used on a millivolt system)
Supply Voltage: 20 to 30 Vac
Frequency: 50 Hz; 60 Hz
Electrical Ratings: 20 to 30 Vac or 750 mV
Sensor Element: Thermistor
Switch Type: Relay
Cycles per Hour: Heating 1-12 CPH; Cooling 1-6 CPH

Accessories:
50001137-001 – FocusPRO TH5110 and Horizontal PRO 1000/2000 Cover Plate Assembly
50002883-001 – FocusPRO 5000/6000, PRO 3000/4000 and horizontal PRO 1000/2000 Cover Plate Assembly
50007297-001 – 12 pack of small coverplates (4 5/16 in. x 5 1/2 in.)
50007298-001 – 12 pack of medium coverplates (5 in. x 6 7/8 in.)

Replacement Parts:
50000951-001 – Replacement Battery Holder for FocusPRO TH5110 Thermostat
50007072-001 – Replacement Battery Holder for FocusPRO TH5220, TH5320, TH6110, TH6220, and TH6320 Thermostat

Material Number	Applications	Terminal Designations	Stages	Switch Positions (System)	Dimensions	Cool Current	Heat Current	Fan Current	Comments
TH5110D1022/U	Up to 1 Heat/1 Cool Conventional Systems and Heat Pumps with No Auxiliary Heat	R, Rc, C, W (O/B), Y, G	Up to 1 Heat/ 1 Cool	HEAT-OFF-COOL-AUTO	3 7/16 in. high x 4 1/2 in. wide x 1 5/16 in. deep (86 mm high x 114 mm wide x 33 mm deep)	1.0 A running	1.0 A running	0.5A running	Large display size 2.98 sq. in.
TH5220D1029/U	Up to 2 Heat/2 Cool Conventional Systems; Up to 2 Heat/1 Cool Heat Pumps	R, RC, C, W-O/B, G, Y, W2-AUX/E, Y2-L	Up to 2 Heat/ 2 Cool	HEAT-OFF-COOL-AUTO-EM.HEAT	3 9/16 in. High x 5 13/16 in. Wide X 1 1/2 in. Deep (91 mm High x 147 mm Wide x 38 mm Deep)	Y = 0.02 A to 1.0 A running; Y2 = 0.02 A to 1.0 A running	W = 0.02 A to 1.0 A running; W2 (AUX) = 0.02 A to 0.5 A running; E = 0.02 A to 1.0 A running	0.02 A to 0.5 A running	Large display size 5.09 sq. in.
TH5320U1001/U	Up to 3 Heat/2 Cool Heat Pumps; Up to 2 Heat/2 Cool Conventional Systems	Rc, R, W (O/B), W2 (AUX/E), Y, Y2, G, L, C	Up to 3 Heat/ 2 Cool	HEAT-OFF-COOL-AUTO-EM.HEAT	3 9/16 in. High x 5 13/16 in. Wide X 1 1/2 in. Deep (91 mm High x 147 mm Wide x 38 mm Deep)	Y = 0.02 A to 1.0 A running; Y2 = 0.02 A to 1.0 A running	W = 0.02 A to 1.0 A running; W2 (AUX/E) = 0.02 A to 0.5 A running	0.02 A to 0.5 A running	Large display size 5.09 sq. in.

FocusPRO® Communicating Thermostats

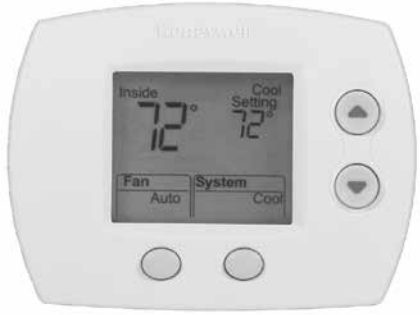

Honeywell's FocusPRO® 5000 digital thermostat offers the perfect blend of features, performance, energy savings and value. With the largest backlit screen in its class, the FocusPRO 5000 prominently displays both room and set temperature.

- Non-programmable digital thermostat
- Large, clear, backlit display - easy to read in various lighting conditions
- Precise comfort control (± 1½°F) - maintains consistent comfort to the highest level of accuracy
- Up to 3 Heat/2 Cool Heat Pump or Up to 2 Heat/2 Cool Conventional

Applications: 3 Heat/2 Cool system for Network Zoning, Conventional, and Heat Pump systems
Color: Premier White®
Changeover: Auto/Manual Selectable
Zones: Up to 9
Accuracy: ±1°F (± 0.5°C)
Operating Humidity Range (% RH): 5 to 90% RH, non-condensing
Power Method: Communicating
Supply Voltage: 20 to 30 Vac
Frequency: 50 Hz; 60 Hz

Dimensions: 3 7/16 in. high x 4 1/2 in. wide x 1 5/16 in. deep (86 mm high x 114 mm wide x 33 mm deep)
Sensor Element: Thermistor
Switch Type: Relay
Used With: THM5421C1008 Equipment Interface Module; W8835A ENVIRAZONE PANEL
Comments: Large display size 2.98 sq. in.

Replacement Parts:
50001137-001/U – Cover Plate Assembly for FocusPRO TH5110, coverplates, bracket for j-boxes, mounting hardware

Material Number	Switch Positions (System)	Switch Positions (Fan)	Terminal Designations	Stages	Setting Temperature Range
TH5320C1002/U	HEAT-OFF-COOL-AUTO-EM.HEAT	AUTO-ON	1, 2, 3	Up to 3 Heat/2 Cool	Heat: 40°F to 90°F; Cool: 50°F to 99°F (Heat: 4.5°C to 32°C; Cool: 10°C to 37°C)

PRO 3000 Non-Programmable Thermostats

Standard Model

Model includes Emergency Heat

Honeywell's PRO 3000\1000 offers a basic thermostat with the convenience of an easy-to-read digital display. Best of all, it's backed by the Honeywell brand name.

- Non-programmable digital thermostat
- Backlit digital display - both current and set temperatures are easy to read in various lighting conditions
- Shows both current and set temperatures at the same time
- Precise comfort control [± 1°F (± 0.5°C)] - maintains consistent comfort to the highest level of accuracy
- Basic operation - easy-to-use slide switches allow you to select the heat or cool mode, and operate the fan

Display Size: 1.32 sq in.
Mounting: Horizontal
Color: Premier White®
Changeover: Manual
Switch Positions (Fan): AUTO-ON
Accuracy: ±1°F (± 0.5°C)
Operating Humidity Range (% RH): 5 to 90% RH, non-condensing
Power Method: Dual Powered: Battery or Hardwire
Frequency: 50 Hz; 60 Hz
Electrical Ratings: 20 to 30 Vac or 750 mV
Dimensions: 3 13/16 in. High X 5 3/8 in. Wide X 1 1/4 in. Deep (97 mm High X 137 mm Wide X 32 mm Deep)

Sensor Element: Thermistor
Switch Type: Relay
Cycles per Hour: Heating 1-12 CPH; Cooling 1-6 CPH
Cool Current: 0.02 A to 1.0 A running
Heat Current: 0.02 A to 1.0 A running

Accessories:
50002883-001 – FocusPRO 5000/6000, PRO 3000/4000 and Horizontal PRO 1000/2000 Cover Plate Assembly
50007298-001 – 12 pack of medium coverplates (5 in. x 6 7/8 in.)

Material Number	Applications	Switch Positions (System)	Supply Voltage	Terminal Designations	Stages	Setting Temperature Range
TH3110D1008/U	1 Heat/1 Cool Conventional Systems and Heat Pumps with No Auxiliary Heat	HEAT-OFF-COOL	20 to 30 Vac; 750 mV	R, Rc, W, Y, G, O, B, C	1 Heat/1 Cool	Heat: 40°F to 90°F; Cool: 50°F to 99°F (Heat: 4.5°C to 32°C; Cool: 10°C to 37°C)
TH3210D1004/U	2 Heat/1 Cool Heat Pump Systems	HEAT-OFF-COOL-EM. HT	20 to 30 Vac	R, Y, AUX, E, G, O, B, L, C	2 Heat/1 Cool Heat Pump	Heat: 40°F to 90°F; Cool: 50°F to 99°F (Heat: 4.5°C to 32°C; Cool: 10°C to 37°C)

PRO 1000 Horizontal Non-Programmable Thermostats

Honeywell's PRO 3000\1000 offers a basic thermostat with the convenience of an easy-to-read digital display. Best of all, it's backed by the Honeywell brand name.

- Non-programmable digital thermostat
- Easy-to-read backlit display - easy to read in various lighting conditions
- Precise comfort control [±1°F (±0.5°C)] - maintains consistent comfort to the highest level of accuracy
- Basic operation - easy-to-use slide switches allow you to select the heat or cool mode, and operate the fan

Display Size: 1.32 sq in.
Mounting: Horizontal
Color: Premier White®
Changeover: Manual
Setting Temperature Range: Selectable Heat: 40°F to 90°F or 35°F to 90°F (Selectable Heat 4.5°C to 32°C or 1.5°C to 32°C)
Operating Humidity Range (% RH): 5 to 90% RH, non-condensing
Power Method: Dual Powered: Battery or Hardwire
Frequency: 50 Hz; 60 Hz

Dimensions: 3 7/16 in. High x 4 5/8 in. Wide x 1 3/16 in. Deep (87mm High x 119mm Wide x 30mm Deep)
Heat Current: 0.02 A to 1.0 A running

Accessories:
50002883-001 – FocusPRO 5000/6000 and PRO 3000/4000 and Horizontal PRO 1000/2000 Cover Plate Assembly

Material Number	Applications	Terminal Designations	Stages	Switch Positions (System)	Switch Positions (Fan)	Electrical Ratings	Cycles per Hour	Cool Current	Comments
TH1100DH1004/U	Heat Only	R, C, W	1 Heat	HEAT-OFF		20 to 30 Vac or 750 mV	Heating 2 - 6 CPH		Adjustable Temperature Scale: Standard selection of 40 to 90°F or Garage selection of 35 to 90°F
TH1110DH1003/U	1 Heat/1 Cool Conventional Systems and Heat Pumps with No Auxiliary Heat	R, RC, C, W, Y, G, O, B	1 Heat/1 Cool	HEAT-OFF-COOL	AUTO-ON	20 to 30 Vac or 750 mV	Heating 2 - 6 CPH; Cooling 2 - 6 CPH	0.02 A to 1.0 A running	
TH1210DH1001/U	2 Heat/1 Cool Heat Pump Systems	R, C, Y, AUX/E, G, O, B	2 Heat/1 Cool Heat Pump	HEAT-OFF-COOL-EM. HT	AUTO-ON	20 to 30 Vac	Heating 2 - 6 CPH; Cooling 2 - 6 CPH	0.02 A to 1.0 A running	

PRO 1000 Vertical Non-Programmable Thermostats

Honeywell's PRO 1000 offers a basic thermostat with the convenience of an easy-to-read digital display. Best of all, it's backed by the Honeywell brand name.

- Non-programmable digital thermostat
- Easy-to-read backlit display - easy to read in various lighting conditions
- Precise comfort control [±1°F (±0.5°C)] - maintains consistent comfort to the highest level of accuracy
- Basic operation - easy-to-use slide switches allow you to select the heat or cool mode, and operate the fan

Display Size: 1.32 sq in.
Mounting: Vertical
Color: Premier White®
Changeover: Manual
Operating Humidity Range (% RH): 5 to 90% RH, non-condensing
Power Method: Dual Powered: Battery or Hardwire
Frequency: 50 Hz,60 Hz
Dimensions: 4 11/16 in. High X 2 7/8 in. Wide X 1 1/8 in. Deep (120 mm high x 74 mm wide x 28 mm deep)
Heat Current: 0.02 A to 1.0 A running

Material Number	Applications	Terminal Designations	Stages	Switch Positions (System)	Switch Positions (Fan)	Electrical Ratings	Cycles per Hour	Cool Current	Setting Temperature Range	Comments
TH1100DV1000/U	Heat Only	R, C, W	1 Heat	HEAT-OFF		20 to 30 Vac or 750 mV	Heating 2 - 6 CPH		Selectable Heat: 40°F to 90°F or 35°F to 90°F (Selectable Heat 4.5°C to 32°C or 1.5°C to 32°C)	Adjustable Temperature Scale: Standard selection of 40 to 90°F or Garage selection of 35 to 90°F
TH1110DV1009/U	1 Heat/1 Cool Conventional Systems and Heat Pumps with No Auxiliary Heat	R, RC, C, W, Y, G, O, B	1 Heat/ 1 Cool	HEAT-OFF-COOL	AUTO-ON	20 to 30 Vac or 750 mV	Heating 2 - 6 CPH; Cooling 2 - 6 CPH	0.02 A to 1.0 A running	Heat: 40°F to 90°F; Cool: 50°F to 99°F (Heat: 4.5°C to 32°C; Cool: 10°C to 37°C)	
TH1210DV1007/U	2 Heat/1 Cool Heat Pump Systems	R, C, Y, AUX/E, G, O, B	2 Heat/ 1 Cool Heat Pump	HEAT-OFF-COOL-EM. HT	AUTO-ON	20 to 30 Vac	Heating 2 - 6 CPH; Cooling 2 - 6 CPH	0.02 A to 1.0 A running	Heat: 40°F to 90°F; Cool: 50°F to 99°F (Heat: 4.5°C to 32°C; Cool: 10°C to 37°C)	

Mercury Free T834 Econo Thermostats

Cool Only

1 Heat/1 Cool

Meets all current and future mercury-free thermostat compliance needs with Honeywell's Mercury-Free Econostat. With a sleek, attractive appearance, the Mercury-Free Econostat is the perfect electromechanical replacement choice.

- Integrated thermometer and temperature setting scale.
- Precise Snap-action switch.
- Mount directly on wall or outlet box.
- Includes dealer logo pocket.

Mounting: Vertical
Color: Premier White®
Accuracy: ±2°F (±1°C)
Supply Voltage: 20 to 30 Vac
Electrical Ratings: 20 to 30 Vac
Dimensions: 4 3/4 in. high x 2 7/8 in. wide x 1 3/8 in. deep (121 mm high x 73 mm wide x 35 mm deep)
Sensor Element: Bimetal

Switch Type: Precision Snap Action
Switching Action: SPST
Cool Current: 0.02 A to 1.0 A running
Heat Current: 0.02 A to 1.0 A running

Accessories:
50019661-001 – Range Stop Assembly for Econostat

Material Number	Description	Applications	Switch Positions (System)	Switch Positions (Fan)	Terminal Designations	Changeover	Stages	Setting Temperature Range
T834L1004/U	Mercury Free Cool Only Thermostat with Positive Off for control of single stage low voltage cooling systems; Temperature scale in Fahrenheit and Celsius	Cool Only	COOL-OFF	AUTO-ON	R, Y, G, O		1 Cool	45°F to 95°F (7°C to 35°C)
T834N1002/U	Mercury Free 1 Heat/1 Cool Stage Thermostat for control of single stage low voltage heating/cooling systems	1 Heat/1 Cool Conventional Systems and Heat Pumps with No Auxiliary Heat	HEAT-OFF-COOL	AUTO-ON	R, Rc, W, Y, G, O, B	Manual	1 Heat/ 1 Cool	45°F to 95°F

Mercury Free T822 Econo Thermostats

Heat-Off

Heat Only

Dual Scale

Thermostats provide 24 Vac control of heating or cooling systems

- Vented cover for improved temperature sensing
- Setting lever and thermometer scale on thermostat face
- Mounts directly on the wall or on vertical outlet box
- Integrated thermometer and setting scale

Mounting: Vertical
Color: Premier White®
Accuracy: ±2°F (±1°C)
Supply Voltage: 20 to 30 Vac
Electrical Ratings: 20 to 30 Vac
Dimensions: 4 3/4 in. high x 2 7/8 in. wide x 1 3/8 in. deep (121 mm high x 73 mm wide x 35 mm deep)
Sensor Element: Bimetal
Switch Type: Precision Snap Action
Switching Action: SPST

Material Number	Description	Applications	Terminal Designations	Stages	Switch Positions (System)	Setting Temperature Range	Heat Current
T822K1000/U	Mercury Free Heat Only Thermostat with Positive Off for control of single stage low voltage heating systems	Heat Only	R, W	1 Heat	HEAT-OFF	45°F to 95°F	0.02 A to 1.0 A running
T822K1018/U	Mercury Free Heat Only Thermostat for control of single stage low voltage heating systems	Heat Only	R, W	1 Heat		45°F to 95°F	0.02 A to 1.0 A running
T822K1034/U	Mercury Free Heat Only Thermostat for control of single stage low voltage heating systems	Heat Only	R, W	1 Heat		(7°C to 32°C)	0.02 A to 1.0 A running
T822K1042/U	Mercury Free Heat Only Thermostat with Low Temperature Scale, Ideal for Garages. Heat/Off. For control of heat only low voltage systems.	Heat Only	R, W	1 Heat	HEAT-OFF	35°F to 85°F	0.02 A to 1.0 A running
T822L1000/U	Mercury Free Cool Only Thermostat control of single stage low voltage cooling systems; Temperature scale in Fahrenheit and Celsius	Cool Only or Heat Only for Normally Open Hot Water Zone Valves	R, Y	1 Cool		45°F to 95°F (7°C to 35°C)	

Mercury Free T827 Econo Thermostats

Heating thermostats provide control of 750 mV or 12 Vdc heating systems.

- Rated for 12 Vdc and millivoltage systems
- Coiled bimetal element operates snap-acting switch
- Temperature setting lever on bottom of thermostat
- Mounting using two screws through base to wall or vertical outlet box
- Temperature setting and thermometer scale on cover

Applications: Heat Only
Mounting: Vertical
Color: Premier White®
Accuracy: ±2°F (±1°C)
Supply Voltage: 12 Vdc; 750 mV

Dimensions: 4 3/4 in. high x 2 7/8 in. wide x 1 3/8 in. deep (121 mm high x 73 mm wide x 35 mm deep)
Sensor Element: Bimetal
Switch Type: Precision Snap Action
Switching Action: SPST

Material Number	Switch Positions (System)	Switch Positions (Fan)	Terminal Designations	Stages	Setting Temperature Range
T827K1009/U	HEAT-OFF		R, W	1 Heat	45°F to 95°F

Wireless Zoning Adapter Kits

Everything you need to relocate or upgrade with a non-programmable thermostat without running new wires. Kit options include wireless outdoor sensor, RedLINK Internet Gateway for remote access, or wireless adapters for working with TrueZONE panels.

- WIRELESS FOCUSPRO® THERMOSTAT: Same great features of the FocusPRO® thermostat - now wireless. Installs in minutes. Displays outdoor temperature and humidity. 1 year battery life. 2 month low battery warning. Dual Fuel enabled.
- EQUIPMENT INTERFACE MODULE (EIM): All HVAC equipment is wired to the module. Module receives communication from the wireless devices.
- RETURN AIR SENSOR: Works with the Equipment Interface Module to maintain safe indoor temperatures if power is lost at the wireless thermostat. Maintains 62°F for heating and 82°F for cooling.
- REDLINK™ WIRELESS TECHNOLOGY: Powered by RedLINK™ reliability. No interference with other wireless devices in the home.

Applications: Heat Pump Systems; Forced warm air
Changeover: Auto/Manual Selectable
Power Method: Thermostat – Battery

Accessories:
REM5000R1001 – Portable Comfort Control uses RedLINK™ to sense and control room temperature anywhere in the home. Works in both zoned and non-zoned applications.
C7089R1013 – Senses outdoor temperature and humidity to display on RedLINK™ enabled thermostats and accessories.
50002883-001 – FocusPRO 5000/6000 and PRO 3000/4000 Cover Plate Assembly
50007298-001 – 12 pack of medium coverplates (5 in. x 6 7/8 in.)

Replacement Parts:
50007072-001 – Replacement Battery Holder for FocusPRO TH5220, TH5320, TH6110, TH6220, and TH6320 Thermostat

Material Number	Programmability	Switch Positions (System)	Switch Positions (Fan)	Includes
YTH5320R1025/U		HEAT-OFF-COOL-AUTO-EM. HEAT	AUTO-ON	TH5320R1002 Wireless FocusPRO® Non-Programmable Thermostat; THM4000R1000 Wireless Adapter
YTH6320R1023/U	5-1-1 Day Program or 5-2 Day Program	HEAT-OFF-COOL-AUTO-EM. HEAT	AUTO-ON	TH6320R1004 Wireless FocusPRO® 5-1-1 Programmable Thermostat; THM4000R1000 Wireless Adapter

Wireless Thermostat Kits with Outdoor Sensor

Everything you need to relocate or upgrade with a programmable thermostat without running new wires. Kit options include wireless outdoor sensors, RedLINK Internet Gateway for remote access, or wireless adapters for working with TrueZONE panels.

- WIRELESS FOCUSPRO® THERMOSTAT: Same great features of the FocusPRO® thermostat - now wireless. Installs in minutes. Displays outdoor temperature and humidity. 1 year battery life. 2 month low battery warning. Dual Fuel enabled.
- EQUIPMENT INTERFACE MODULE (EIM): All HVAC equipment is wired to the module. Module receives communication from the wireless devices.
- RETURN AIR SENSOR: Works with the Equipment Interface Module to maintain safe indoor temperatures if power is lost at the wireless thermostat. Maintains 62°F for heating and 82°F for cooling.
- REDLINK™ WIRELESS TECHNOLOGY: Powered by RedLINK™ reliability. No interference with other wireless devices in the home.

Terminal Designations: C, R, Rc, Rh, W-O/B, W2-Aux/E, Y, Y2, G, L, RAS
Changeover: Auto/Manual Selectable
Programmability: 5-1-1 Day Program or 5-2 Day Program
Power Method: Battery (Thermostat)
Cool Current: 1.0 A running
Heat Current: 1.0 A running
Fan Current: 0.6 A running

RED LINK™ Wireless Technology

Accessories:
50002883-001 – FOCUSPRO® 5000/6000 and PRO 3000/4000 Cover Plate Assembly
50007298-001 – 12 pack of medium coverplates (5 in. x 6 7/8 in.)
C7089R1013 – Senses outdoor temperature and humidity to display on RedLINK™ enabled thermostats and accessories.
REM5000R1001 – Use the Portable Comfort Control anywhere in the home to experience a new level of comfort and convenience.

Replacement Parts:
50007072-001 – Replacement Battery Holder for FocusPRO TH5220, TH5320, TH6110, TH6220, and TH6320 Thermostat

Material Number	Applications	Electrical Ratings	Switch Positions (System)	Switch Positions (Fan)	Stages	Includes
YTH6320R1122/U	Gas, oil, electric, heat pump, forced warm air, hot water, steam or gravity	Equipment Interface Module – 18 to 30 Vac, 50 Hz; 60 Hz	HEAT-OFF-COOL-AUTO-EM.HEAT	AUTO-ON	Up to 3 Heat / 2 Cool Heat Pump or Up to 2 Heat / 2 Cool Conventional	C7735A1000 Return Air Sensor|THM5320R1000 Equipment Interface Module|TH6320R1004 Wireless FocusPRO® 5-1-1 Programmable Thermostat|THM6000R1002 RedLINK Internet Gateway|C7089R1013 Wireless Outdoor Sensor

RedLINK Internet Gateway

The RedLINK™ Internet Gateway provides remote access to any RedLINK™ enabled thermostat through the internet, smartphone or tablet.

- RedLINK™ enabled to communicate with compatible wireless devices.
- Control any RedLINK™ enabled thermostat.
- 3 foot ethernet cable included.
- Simple installation to home or business router.
- Easily change system modes and indoor temperature through the web portal or mobile app.
- Multiple HOLD options allows modification of schedule as needed.
- High/Low temperature and humidity messaging alerts the user when the indoor conditions are too high or too low.
- Will accept a maximum of 4 thermostats on one single Gateway.

Applications: Internet control of RedLINK thermostats; Up to 4 Heat/ 2 Cool Heat Pumps
Color: Black
Operating Temperature Range: 32°F to 120°F (0°C to 48.9°C)
Operating Humidity Range (% RH): 5 to 90% RH, non-condensing
Power Method: A 5 Vdc, 1000 mA power adapter

Electrical Connections: 24 Volt Plug In Transformer
Electrical Ratings: 20 to 30 Vac
Dimensions: Unit: 5 in. tall x 5 1/2 in. wide x 1 3/8 in. deep; Foot base: 6 in. x 2 1/2 in. (Unit: 127 mm tall x 140 mm wide x 35 mm deep; Foot base: 152 mm x 64 mm)

Material Number	Description	Used With	Includes
THM6000R1002/U	RedLINK Internet Gateway	RedLINK™ enabled thermostats and accessories	3 Foot Ethernet Cable and Plug in Power Adapter

C7089 Wireless Outdoor Sensor

Senses outdoor temperature and humidity to display on RedLINK™ enabled thermostats and accessories.

- Powered by RedLINK™ reliability
- No interference with other wireless devices in the home
- Reliable performance in all climates
- Installs in minutes
- Up to 5 year battery life
- 2 month low battery warning
- Battery warning displayed on RedLINK™ enabled thermostats
- Includes 2 AA Lithium batteries and mounting hardware

Applications: Outdoor Sensor
Mounting: Vertical mounting with supplied bracket and mounting hardware
Color: Gray
Operating Temperature Range: -40°F to 140°F (-40°C to +60°C)
Operating Humidity Range (% RH): 0 to 100% RH, condensing

Power Method: Battery
Dimensions: (with mounting bracket) 5 in. high x 3 1/2 in. wide x 1 11/16 in. deep ([with mounting bracket] 127 mm high x 89 mm wide x 43 mm deep)
Sensor Element: Thermistor

Material Number	Comments	Used With	Includes
C7089R1013/U	Wireless Outdoor Sensor is also available in kits	RedLINK™ enabled thermostats and accessories	2 AA Lithium Batteries and mounting hardware

C7189 Wireless Indoor Air Sensor

The Remote Indoor Sensor works with RedLINK enabled thermostats.

- Used to sense temperature if the thermostat is installed in a poor temperature sensing location.
- Small remote temperature sensor to match any room decor.
- Easy to install and use.
- Factory calibrated; no field calibration required.

Applications: Wireless Indoor Air Sensor
Mounting: Mounts on a vertical wall with supplied bracket and mounting hardware
Color: Arctic White
Operating Temperature Range: 0°F to 120°F (35°F to 114°F for optimal battery life) -17.8°C to 48.9°C (1.7°C to 45.6°C for optimal battery life)
Operating Humidity Range (% RH): 5 to 90% RH, non-condensing
Power Method: Battery
Dimensions: 2 7/8 in. high x 1 7/8 in. wide x 15/16 in. deep (73 mm high x 48 mm wide x 24 mm deep)

Material Number	Description	Used With	Includes
C7189R1004/U	Senses indoor temperature and humidity for control with RedLINK thermostats	Redesigned Prestige IAQ, Prestige IAQ 2.0, Prestige 2.0, All New RedLINK VisionPRO 8000	2 AAA alkaline batteries and mounting hardware

REM1000 RedLINK Wireless Entry/Exit Remote

Applications: Heating and Cooling systems, RedLINK Thermostat Accessory
Color: White
Operating Temperature Range: 35°F to 114°F for optimal battery life (1.7°C to 45.6°C for optimal battery life)
Operating Humidity Range (% RH): 5 to 90% RH, non-condensing
Power Method: Battery, Lithium Coin Cell
Dimensions: 6 1/4 in. high x 3 1/8 in. wide x 1 5/8 in. deep (159 mm high x 79 mm wide x 41 mm deep)
Sensor Element: Thermistor
Used With: RedLINK™ enabled thermostats and accessories

Material Number	Description
REM1000R1003/U	RedLINK Wireless Entry/Exit Remote

REM5000 Portable Comfort Control

Use the Portable Comfort Control anywhere in the home to experience a new level of comfort and convenience. Works in both zoned and non-zoned applications.

- Powered by RedLINK™ reliability
- No interference with other wireless devices in the home
- Works with compatible RedLINK™ enabled thermostats and accessories
- Installs in minutes
- Touchscreen interface with backlit display
- Can display outdoor temperature and humidity
- Built-in pager with an audible noise helps locate the device in the home
- Screen-lock feature helps prevent accidental changes
- 1 year battery life
- 2 month low battery warning
- In Non-Zoned Applications: Bring it with you anywhere in the home to sense and control temperature from the room that you are in
- In Zoned Applications: View and adjust all RedLINK™ enabled thermostats from a single control
- Controls up to 16 thermostats

Applications: Zoned and Non-Zoned Applications
Changeover: Auto or Manual
Differential Temperature: ± 1°F (±0.5°C)
Operating Temperature Range: 32°F to 120°F (0°C to 48.9°C)
Operating Humidity Range (% RH): 5 to 90% RH, non-condensing
Power Method: Battery

Dimensions: 6 1/4 in. high x 3 1/8 in. wide x 1 5/8 in. deep (159 mm high x 79 mm wide x 41 mm deep)
Sensor Element: Thermistor
Used With: RedLINK™ enabled thermostats and accessories
Comments: Portable Comfort Control is also available in kits.

Material Number	Description
REM5000R1001/U	Use the Personal Comfort Station™ anywhere in the home to experience a new level of comfort and convenience. Works in both zoned and non-zoned applications.

Wireless Adapter

Wireless Adapters allows easy addition of RedLINK™ enabled thermostats to TrueZONE™ systems. Use with a RedLINK™-enabled TrueSTEAM™ Humidification System to communicate & control humidity. It also controls dehumidifiers like the Honeywell TrueDRY™.

- Powered by RedLINK™ reliability.
- No interference with other wireless devices in the home.
- Communicates with Wireless Outdoor Sensor to automatically control humidity.

Terminal Designations: A, B, C, D
Mounting: Mount Wireless Adapter on wall near HVAC equipment or on the duct.
Color: Gray
Operating Temperature Range: -40°F to 165°F (-40°C to 73.9°C)

Operating Humidity Range (% RH): 5 to 95% RH, non-condensing
Dimensions: 5 9/16 in. high x 4 3/8 in. wide x 1 1/4 in. deep (141 mm high x 112 mm wide x 32 mm deep)
Operation: One adapter per zone control panel, HZ322 or HZ432 TrueZONE panel

Material Number	Description
THM4000R1000/U	Wireless Adapter allows you to easily add RedLINK™ enabled thermostats to a TrueZONE™ system without running new wires.

C7735 Return Air Sensor

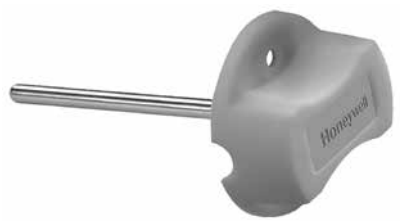

Return Air Sensor mounts on return duct for backup control of non-zoned RedLINK™ enabled Wireless Systems and Thermostats.

- Works with THM5320R1000 Equipment Interface Module to maintain safe indoor temperatures if power is lost at the wireless thermostat
- Takes control of the equipment by turning on the blower fan and sensing the indoor temperature of the home
- Controls heating at 62°F and cooling at 82°F
- Provides homeowners with peace of mind
- Installs in minutes
- Includes mounting hardware

Applications: Mount on return duct for backup control of non-zoned systems
Mounting: Mounts on return duct
Color: Gray

Operating Temperature Range: 0°F to 200°F (-17.8°C to 93.3°C)
Dimensions: 3 7/8 in. high x 4 1/8 in. wide x 1 1/4 in. deep (77 mm high x 102 mm wide x 25 mm deep. Sensor probe is 3 3/4 in. long (77 mm)

Material Number	Comments	Used With
C7735A1000/U	Return Air Sensor is also available in kits for non-zoned systems	THM5320R1000 Equipment Interface Module; TH6320R1004 or TH5320R1002 Wireless FocusPRO® Thermostat

C7089 Outdoor Sensor

Remote outdoor temperature sensor, when installed, the current outdoor temperature is displayed. Also can be used to manage dual fuel and lock-out expensive auxiliary heat in heat pump applications.

- Mounting clip allows easy sensor positioning on siding or soffit.
- Includes 60 in. leadwires.
- Factory calibrated; no field calibration required.
- Maximum wire run of 200 feet.

Mounting: Mounting Clip provided and screws provided.
Ambient Temperature Range: -40°F to +120°F (-40°C to +49°C)
Operating Humidity Range (% RH): 5 to 95% RH, non-condensing

Dimensions: 2 1/4 in. x 3/8 in. with 60 in. leadwires. (57 mm x 10 mm with 1524 mm leadwires.)

Material Number	Description	Applications	Used With
C7089U1006/U	Outdoor Sensor used to measure the outdoor temperature for use with VisionPro and VisionPRO IAQ	Outdoor sensor for VisionPRO and VisionPRO IAQ Thermostats	VisionPRO® Series Thermostats, VisionPRO® IAQ Thermostat

C7189 Remote Indoor Sensor

The Remote Indoor Temperature Sensor for VisionPRO® IAQ and VisionPRO® thermostat families.

- Used to sense temperature if the thermostat is installed in a poor temperature sensing location.
- Small remote temperature sensor to match any room decor.
- Easy to install and use.
- Factory calibrated; no field calibration required.

Applications: Remote Indoor Temperature Sensor for VisionPRO and VisionPRO IAQ Thermostats
Mounting: Mounts directly on the wall using mounting screws and anchors provided
Color: Premier White®

Ambient Temperature Range: 45°F to 88°F (7°C to 32°C)
Operating Humidity Range (% RH): 5 to 95% RH, non-condensing
Dimensions: 1 1/2 in. wide x 2 1/4 in. high x 3/4 in. deep (38 mm wide x 57 mm high x 19 mm deep)

Material Number	Description	Setting Temperature Range	Used With
C7189U1005/U	Remote indoor sensor for remote sensing applications.	See Thermostats	VisionPRO® and VisionPRO® IAQ Series Thermostats

S483 Winter Watchman

Used as a freeze warning device. Completes circuit to household lamp on temperature fall, indicating inoperative heating equipment.

- Plugs directly into wall outlet.
- Lamp plugs into receptacle at bottom of Winter Watchman device.
- Useful when house is unoccupied to notify a neighbor of a temperature drop so heating source fault can be rectified before freeze-up occurs.
- Not precision calibrated for use as a thermostat.

Mounting: Vertical
Color: Beige
Accuracy: ±5°F (±3°C)
Ambient Temperature Range: 30°F to 60°F (-1°C to +16°C)
Supply Voltage: 120 Vac
Frequency: 60 Hz
Electrical Ratings: Load: 120W maximum for incandescent lamp load only.

Dimensions: 3 3/8 in. high x 2 1/8 in. wide x 13/16 in. deep (86 mm high x 54 mm wide x 21mm deep)
Sensor Element: Bimetal
Switching Action: SPST
Heat Current: 1.0A

Material Number	Applications	Setting Temperature Range
S483B1002/U	Incandescent Lamp	30°F to 60°F (-1°C to 16°C)

TL116A Line Volt Electric Heating Thermostat

This thermostat is designed to control an electric heating system such as a baseboard heater, a convector or a fan-forced heater.

Applications: Baseboard heater, Convector or Fan-forced Heater, Electric Heating
Mounting: Vertical
Color: White
Accuracy: 0.9°F / 0.5°C
Ambient Temperature Range: 32°F to 120°F / 0°C to 50°C
Power Method: Hardwired
Supply Voltage: 120 Vac; 208 Vac; 240 Vac
Frequency: 50 Hz; 60 Hz
Electrical Connections: 6 in. (150 mm) tinned copper lead wires
Dimensions: 5.0 in. X 3.05 in. X 2.4 in. (127 mm x 77 mm x 60 mm)
Sensor Element: Thermistor
Switch Type: Relay
Switching Action: SPST
Approvals, CSA: Certified
Comments: battery-free, Min & Max temperature locks

Material Number	Setting Temperature Range	Electrical Ratings
TL116A1008/U	5°C to 27°C	Minimum Load: 1.25 A (resistive only) 300 W @240 Vac, 150 W @ 120 Vac, Maximum Load: 12.5 A (resistive only), 3000 W @ 240 Vac, 1500 W @ 120 Vac
TL116A1016/U	41°F to 80°F	Minimum Load: 1.25 A (resistive only) 300 W @240 Vac, 150 W @ 120 Vac, Maximum Load: 12.5 A (resistive only), 3000 W @ 240 Vac, 1500 W @ 120 Vac

7-Day Programmable Line Voltage Thermostat

The 7-day programmable thermostat provides electronic control of 208/240 Vac resistive rated electric baseboard heaters, radiant ceiling heat, convectors and fan forced heaters.

- Advanced temperature control ensures total comfort by minimizing temperature swings.
- On/Off or On/Standby switch allows you to turn the thermostat off at the end of the heating season.
- 7-day programmable - maintain the pre-set program schedule for up to 20% energy savings, or modify the schedule to fit your lifestyle.
- On-screen heating power indicator gives at-a-glance verification of power being used.
- Early Start function ensures programmed temperature is reached by programmed time.
- Electronic temperature control - precision of ±1°F saves up to an additional 10% on heating bills.
- Temporary bypass enables temperature override without changing programming.
- Large, clear, backlit display - easy to read in various lighting conditions.
- Attractive design includes hidden programming buttons.
- Soundproofed for quiet operation - reduces the clicking noise commonly heard with conventional thermostats.
- Maintenance free - no batteries required.

Applications: Electric baseboards, convectors and fan forced heaters (resistive rated loads). 4 Wire models, not compatible with 2-wire applications.
Display Size: 2.67 sq in.
Mounting: Vertical
Color: Premier White®
Stages: 1 Heat
Programmability: 7-Day Program
Setting Temperature Range: 40°F to 86°F (5°C to 30°C)
Ambient Temperature Range: 32°F to 122°F (0°C to 50°C)
Power Method: Hardwired
Supply Voltage: 208 Vac; 240 Vac
Frequency: 50 Hz; 60 Hz
Electrical Connections: 4-wire tinned copper leadwires
Dimensions: 4 7/8 in. high x 2 3/4 in. wide x 7/8 in. deep (124 mm high x 70 mm wide x 23 mm deep)
Sensor Element: Thermistor
Switch Type: Epoxy-soundproofed relay
Approvals, CSA: cCSAus, File Number: LR76030
Approvals, Underwriters Laboratories Inc.: UL Listed 9R12, File Number: E183695

Material Number	Description	Electrical Ratings	Switching Action	Used With	Comments
TH115-A-240S-B/U	Aube Logo Line Volt Programmable Electric Heating Thermostat with Backlight	Maximum Load: 16.7 A (resistive only), 3475 W @ 208 Vac, 4000 W @ 240 Vac	SPST	Compatible with CT240-01 or CT241-01	
TL8130A1005/U	LineVoltPRO Honeywell logo Digital Programmable Single Pole Line Voltage Thermostat for electric baseboards, convectors and fan forced heaters (resistive rated loads).	Maximum Load: 16.7 A (resistive only), 3475 W @ 208 Vac, 4000 W @ 240 Vac	SPST		No remote input capability, No dry contacts
TL8230A1003/U	LineVoltPRO Honeywell logo Digital Programmable Single Pole Line Voltage Thermostat for electric baseboards, convectors and fan forced heaters (resistive rated loads).	Maximum Load: 15 A (resistive only), 3210 W @ 208 Vac, 3600 W @ 240 Vac	DPST		No remote input capability, No dry contacts

LineVoltPRO® 8000 7-Day Programmable Hydronic Thermostat

The TL8100 Hydronic Thermostat offers the energy savings of a programmable control for a wide variety of applications without a need to carry multiple thermostats for different applications. Controls 2-way and 3-way zone valves or circulator pumps.

Applications: Central Heating (Conventional); Baseboards; Convectors; Fan-forced Heaters; Radiant Ceilings
Mounting: Vertical
Color: White
Programmability: 7-Day Program
Setting Temperature Range: 40°F to 85°F (5°C to 30°C)
Differential Temperature: 0.1°F (0.1°C)
Operating Temperature Range: 32°F to 122°F (0°C to 50°C)
Operating Humidity Range (% RH): 0% to 95%, non-condensing
Power Method: 2 AA (LR6) batteries
Supply Voltage: 24 Vac; 30 Vdc; 120 Vac; 240 Vac
Electrical Connections: Screw terminals
Electrical Ratings: Maximum Load: 5 A (resistive), 2 A (inductive) @ 24 Vac, 120 Vac, 240 Vac; Compatible with millivolt systems
Dimensions: 4.9 in. X 3.8 in. X 1 in. (126 mm X 97 mm X 26 mm)
Sensor Element: Thermistor
Switch Type: Relay
Approvals, Underwriters Laboratories Inc.: Approved

Material Number	Description	Stages	Accuracy	Terminal Designations	Comments	Used With
TL8100A1008/U	TL8100A1008 - Multi-Application 7-Day Programmable Electronic Thermostat	1 Heat	0.5°C	R, W, (X, C, optional remote input)	Pump Protection (for hot water heating)	Aube CT240-01 Telephone Controller

LineVoltPRO® 7000 Digital Non-Programmable Electric Heat Thermostats

LineVoltPRO™ digital thermostats provide electronic control of 208/240 Vac resistive rated electric baseboard heaters, radiant ceiling heat, convectors and fan forced heaters. If used as directed, they can save up to 10% on annual heating costs.

- Electronic temperature control - precision of ±1°F saves up to 10% on heating bills.
- Large, clear, backlit display - easy to read in various lighting conditions.
- Soundproofed for quiet operation - reduces the clicking noise commonly heard with conventional thermostats.
- On/Off switch allows you to turn the thermostat off at the end of the heating season.
- Heating indicator - at a glance confirmation that the heat is on.
- Maintenance free - no batteries required.

Applications: Electric baseboards, convectors and fan forced heaters (resistive rated loads).
Mounting: Vertical
Color: Premier White®
Accuracy: ±1°F (± 0.5°C)
Operating Temperature Range: 32°F to 122°F (0°C to 50°C)
Supply Voltage: 208 Vac; 240 Vac
Frequency: 50 Hz; 60 Hz
Electrical Connections: 5.5 in. (140mm) tinned copper lead wires
Dimensions: 4 7/8 in. high x 2 3/4 in. wide x 7/8 in. deep (124 mm high x 70 mm wide x 23 mm deep)
Sensor Element: Thermistor
Switch Type: Relay
Switching Action: DPST
Approvals, CSA: cCSAus, File Number: LR76030
Approvals, Underwriters Laboratories Inc.: UL Listed 9R12, File Number: E183695

Material Number	Electrical Ratings	Stages	Setting Temperature Range
TL7235A1003/U	15 Amps Max; 3600 Watts at 240 VAC, 3120 Watts at 208 VAC	1 Heat	40°F to 86°F (5°C to 30°C)

T410 Electric Heat Thermostats

Economy thermostats that provide reliable line voltage control of resistive rated electric heating equipment. Snap-action switch makes heating circuit on temperature fall.

- Economical.
- Replace virtually any two-wire (T410A) or four-wire (T410B) line voltage wall-mounted electric heating thermostat.
- Easy to install; 6 in. (150 mm) color-coded leads.
- Include long-lasting Micro Switch™ mechanism.
- Rugged, plastic mounting base and one-piece cover with vents.
- Ideally suited to new construction applications.

Applications: Electric baseboards, convectors and fan forced heaters (resistive rated loads).
Mounting: Vertical
Accuracy: (2°C)
Differential Temperature: 3°F (2°C)
Ambient Temperature Range: 40°F to 85°F (5°C to 30°C)
Supply Voltage: 120 Vac; 208 Vac; 240 Vac; 277 Vac
Frequency: 60 Hz
Electrical Connections: 6 in. (150 mm) copper leadwires, suitable for connecting to aluminum wiring if approved CO/ALR solderless connectors are used.

Electrical Ratings: Non-inductive resistive 22A at 120/208/240 Vac. 19A at 277 Vac.
Dimensions: 4 1/2 in. high x 2 3/4 in. wide x 2 1/4 in. deep (115 mm high x 70 mm wide x 57 mm deep)
Sensor Element: Bimetal
Approvals, CSA: Listed: File No. LR1322
Approvals, Underwriters Laboratories Inc.: Listed; File No. E4436, Guide No. XAPX

Accessories:
272804A – Range Stop and Locking Screws Assembly

Material Number	Color	Switching Action	Stages	Setting Temperature Range	Includes
T410A1013/U	Premier White®	SPST	1 Heat	40°F to 80°F	
T410A1047/U	Beige	SPST	1 Heat	(5°C to 25°C)	
T410B1004/U	White	DPST	1 Heat	40°F to 80°F	Positive OFF
T410B1129/U	Premier White®	DPST	1 Heat	(5°C to 25°C)	Positive OFF

T498 Electric Heat Thermostats

Electric Heat Thermostats provide line voltage control of electric heating systems.

- Easy to install; color-coded leads.
- Include thermometer. Include long-lasting Micro Switch™ mechanism; makes on temperature fall.
- Rugged, plastic mounting base.
- Mount on standard 2 x 4 in. outlet box.
- Select models include extra knob decal for recalibration, if necessary.

Applications: Electric baseboards, convectors and fan forced heaters (resistive rated loads).
Mounting: Vertical
Accuracy: 1°F (2°C)
Differential Temperature: 3°F (2°C)
Ambient Temperature Range: 40°F to 85°F (5°C to 30°C)
Supply Voltage: 120 Vac; 208 Vac; 240 Vac; 277 Vac
Frequency: 60 Hz
Electrical Connections: 6 in. (150 mm) copper leadwires, suitable for connecting to aluminum wiring if approved CO/ALR solderless connectors are used.
Electrical Ratings: Non-inductive resistive 22A at 120/208/240 Vac. 19A at 277 Vac.

Dimensions: 4 9/16 in. high x 2 7/8 in. wide x 1 15/16 in. deep (116 mm high x 73 mm wide x 33 mm deep)
Sensor Element: Bimetal
Approvals, CSA: Listed: File No. LR1322
Approvals, Underwriters Laboratories Inc.: Listed; File No. E4436, Guide No. XAPX
Tradeline Value: Tradeline

Accessories:
272804A – Range Stop and Locking Screws Assembly
272823 – Blind Locking Cover and Range Stop Assembly

Material Number	Color	Switching Action	Stages	Setting Temperature Range	Includes
T498A1794/U	Brush gold finish	SPST	1 Heat	(5°C to 25°C)	Thermometer, range stops and locking cover
T498A1927/U	Premier White®	SPST	1 Heat	(5°C to 25°C)	
T498B1512/U	Brush gold finish	DPST	1 Heat	40°F to 80°F	Positive OFF, Range stops, locking cover and extra knob decal for recalibration
T498B1579/U	Brush gold finish	DPST	1 Heat		Positive OFF, thermometer
T498B1652/U	Brush gold finish	DPST	1 Heat	(5°C to 25°C)	Positive OFF
T498B1678/U	Premier White®	DPST	1 Heat	(5°C to 25°C)	Positive OFF

T4398 High Performance Electric Heat Thermostats

High Performance Electric Heat Thermostats provide precise line voltage control of resistive-rated electric heating equipment.

- For control of resistive-rated baseboard electric heaters.
- Extremely sensitive to temperature changes.
- Replace virtually all standard wall-mounted line voltage thermostats.
- Color-coded leads allow easy installation.
- Include long-lasting Micro Switch™ mechanism.
- Rugged, plastic mounting base.
- Cover thermometer indicates room temperature.
- Well suited for upgrades and high-end new construction.
- Mounts directly on vertical 2 x 4 in. outlet box.

Applications: Electric baseboards, convectors and fan forced heaters (resistive rated loads).
Mounting: Vertical
Color: Premier White®
Accuracy: (1°C)
Differential Temperature: 2°F (1°C)
Ambient Temperature Range: 50°F to 80°F (10°C to 25°C)
Supply Voltage: 120 Vac; 208 Vac; 240 Vac; 277 Vac
Frequency: 60 Hz
Electrical Connections: 6 in. (150 mm) copper leadwires, suitable for connecting to aluminum wiring if approved CO/ALR solderless connectors are used.

Electrical Ratings: Non-inductive resistive 22A at 120/208/240 Vac. 19A at 277 Vac.
Dimensions: 4 1/2 in. high x 2 7/8 in. wide x 2 5/8 in. deep (115 mm high x 73 mm wide x 67 mm deep)
Sensor Element: Vapor filled dual diaphragm
Approvals, CSA: Listed: File No. LR1322
Approvals, Underwriters Laboratories Inc.: Listed; File No. E4436, Guide No. XAPX

Accessories:
272804A – Range Stop and Locking Screws Assembly

Material Number	Switching Action	Stages	Setting Temperature Range	External Sensors Available	Tradeline Value	Includes
T4398A1005/U	SPST	1 Heat	(5°C to 25°C)			Thermometer
T4398A1013/U	SPST	1 Heat	(10°C to 25°C)			
T4398A1021/U	SPST	1 Heat	50°F to 80°F		Tradeline	Thermometer, range stops and locking cover screws
T4398B1003/U	DPST	1 Heat	(10°C to 25°C)	Outdoor Sensor optional		Thermometer, Positive OFF
T4398B1029/U	DPST	1 Heat	50°F to 80°F	Outdoor Sensor optional	Tradeline	Thermometer, range strops, locking cover screws, Positive Off

EConnect™ Wireless Line Volt Thermostat

- Wireless Installation - eliminates opening walls for system or control upgrades
- Precise Temperature Control - on the wall where it belongs, for optimal sensing and comfort
- Electronic Programmable Thermostat - enables energy savings of up to 33%
- User-friendly, Plain-language Interface - easily adjust your comfort settings
- Compatible Wireless Accessories - for added comfort and convenience
- Connect up to 8 EIM's per line volt thermostat

Applications: Electric Heating; Baseboard heater; Convector or Fan-forced Heater
Display Size: Thermostat 4.53 sq. in.
Mounting: Vertical
Color: Relay: Grey; Thermostat: White; Antenna: White or Light Almond
Programmability: 5-2 Day Program; 7 Day Program
Setting Temperature Range: Thermostat 41°F - 86°F (5°C - 30°C)
Differential Temperature: 1°F (0.5°C)
Operating Temperature Range: Thermostat: 32°F - 122°F; EIM: -4°F - 140°F (Thermostat: 0°C - 50°C; EIM: -20°C - 60°C)
Ambient Temperature Range: 32°F to 104°F (0°C to 40°C)
Operating Humidity Range (% RH): Thermostat: 5 to 90% RH, non-condensing; EIM: 5 to 95% RH, non-condensing
Power Method: Thermostat: Battery; EIM: Hardwired
Supply Voltage: 100 to 240 Vac
Frequency: 50 Hz; 60 Hz
Electrical Connections: 6 in. (150 mm) tinned copper lead wires
Electrical Ratings: Minimum Load: 0.4 A (resistive only) 100 W @ 240 Vac, 50 W @ 120 Vac; Maximum Load: 12.5 A (resistive only), 3000 W @ 240 Vac, 1500 W @ 120 Vac

Dimensions: Thermostat: 5.13 in. high x 3.22 in. wide x 1.14 in. Deep; Relay: 3.03 in. high x 2.49 in. wide x 1.28 in. Deep; Antenna: 2.89 in. high x 2.63 in. wide x 1.16 in. Deep (Thermostat: 130 mm high x 82 mm wide x 29 mm Deep; Relay: 73 mm high x 63 mm wide x 29 mm Deep; Antenna: 71 mm high x 62 mm wide x 33 mm Deep)
Sensor Element: Thermistor
Switch Type: Relay
Switching Action: SPST
External Sensors Available: Outdoor – C7089R1013, optional
Approvals, NEMA Standard: Energy Aware
Approvals, FCC: Approved
Approvals, Underwriters Laboratories Inc.: Approved
Comments: For French Only User interface, use YTA7210-AR-SPK. For English User Interface, use Honeywell YTL9160AR1000

Accessories:
C7089R1013 – Senses outdoor temperature and humidity to display on RedLINK™ enabled thermostats and accessories.
REM5000R1001 – Portable Comfort Control uses RedLINK™ to sense and control room temperature anywhere in the home. Works in both zoned and non-zoned applications.
THM6000R1002 – RedLINK Internet Gateway

Material Number	Description	Includes
YTA7210-AR-SPK/U	Aube logo Wireless Programmable/Non-programmable Line Volt Thermostat kit. RedLINK™ Enabled. Up to 12.5 A. Kit includes Wireless EConnect™ 7-Day / 5-2 Programmable Thermostat and Electrical Heat Equipment Interface Module. French Interface.	ATM100-SPK Equipment Interface Module
YTL9160AR1000/U	Honeywell logo Wireless Programmable/Non-programmable Line Volt Thermostat kit. RedLINK™ Enabled. Up to 12.5 A. Kit includes Wireless EConnect™ 7-Day / 5-2 Programmable Thermostat and Electrical Heat Equipment Interface Module. English Interface.	TLM1110R1000 Equipment Interface Module

Material Number	Description	Used With	Includes
ATM100-SPK/U	Aube logo EConnect™ Wireless Electrical Heat Equipment Interface Module. For Baseboards, convectors and fan-forced heaters up to 12.5 A.	YTA7210-AR-SPK EConnect™ thermostat kit	Aube Electrical Heat Equipment Interface, white and light almond antenna covers
TLM1110R1000/U	Honeywell logo RedLINK™ Enabled Electrical Heat Equipment Interface Module. For Baseboards, convectors and fan-forced heaters up to 12.5 A.	YTL9160AR1000 EConnect™ thermostat kit	Honeywell Electrical Heat Equipment Interface, white and light almond antenna covers

TG510 Versaguard Universal Thermostat Guards

The Versaguard® Universal Thermostat Guards cover wall thermostats and protect against tampering, damage and unauthorized adjustment of thermostat settings.

- Unique double-wall construction provides extra measure of tamper-resistance.
- Used in both new and existing applications.
- Tamper-resistant lock; key cannot be removed unless in locked position.
- All models mount vertically or horizontally on wall or exposed junction box.
- Vents in guard base allow airflow for optimum thermostat performance.

Applications: Small Thermostat Guard

Accessories:
191990A – Replacement Keys (set of 2) for TG509, TG510, TG511 and TG51

Material Number	Color	Description	Dimensions	Used With	Tradeline Value
TG510A1001/U	Ring Base – clear acrylic; Wallplate – Opaque Polystyrene	Small universal thermostat guard Clear cover, clear base opaque wallplate Fits T87 RS TX400	Outside – Height: 5 7/8 in., Width: 5 7/8 in., Depth: 2 1/2 in.; Inside – Height: 4 7/16 in., Width: 4 7/16 in. (Outside – Height: 149 mm, Width: 149 mm, Depth: 64 mm; Inside – Height: 113 mm, Width: 113 mm)	T87 and others of similar size	Tradeline
TG510D1005/U	Painted metal; Ring Base – opaque polystyrene; Wallplate – Opaque Polystyrene	Small Universal Thermostat Guard with Beige painted steel cover, opaque ring base and wallplate	Outside – Height: 5 7/8 in., Width: 5 11/16 in., Depth: 2 7/16 in.; Inside – Height: 4 7/16 in., Width: 4 7/16 in. (Outside – Height: 149 mm, Width: 144 mm, Depth: 62 mm; Inside – Height: 113 mm, Width: 113 mm)	T87 and others of similar size	

TG511 Versaguard Universal Thermostat Guards

The Versaguard® Universal Thermostat Guards cover wall thermostats and protect against tampering, damage and unauthorized adjustment of thermostat settings.

- Unique double-wall construction provides extra measure of tamper-resistance.
- Used in both new and existing applications.
- Tamper-resistant lock; key cannot be removed unless in locked position.
- All models mount vertically or horizontally on wall or exposed junction box.
- Vents in guard base allow airflow for optimum thermostat performance.

Applications: Medium Thermostat Guard

Accessories:
191990A – Replacement Keys (set of 2) for TG509, TG510, TG511 and TG51

Material Number	Color	Description	Dimensions	Used With	Tradeline Value
TG511A1000/U	Ring Base – clear acrylic; Wallplate – Opaque Polystyrene	Medium Universal Thermostat Guard with clear cover and base, and opaque wallplate Fits T822, T834, T8034, T841, T874 with Q674, WR1F46, and others	Outside – Height: 6 1/2 in., Width: 7 1/2 in., Depth: 2 15/16 in.; Inside – Height: 5 1/16 in., Width: 6 1/16 in. (Outside – Height: 165 mm, Width: 191 mm, Depth: 75 mm; Inside – Height: 129 mm, Width: 154 mm)	TH3000 Series, TH4000 Series, TH5000 Series, TH6000 Series, TH8000 Series, Others thermostats of similar size	Tradeline
TG511A1018/U	Ring Base – clear acrylic; Wallplate – Opaque Polystyrene	Medium Universal Thermostat Guard with clear cover and base, and opaque wallplate Fits T822, T834, T8034, T841, T874 with Q674, WR1F46, and others	Outside – Height: 6 1/2 in., Width: 7 1/2 in., Depth: 2 15/16 in.; Inside – Height: 5 1/16 in., Width: 6 1/16 in. (Outside – Height: 165 mm, Width: 191 mm, Depth: 75 mm; Inside – Height: 129 mm, Width: 154 mm)	T874/Q674, Others of similar size	
TG511B1008/U	Ring Base – opaque polystyrene; Wallplate – Opaque Polystyrene	Medium Universal Thermostat Guard with opaque cover, base and wallplate Fits T822, T834, T8034, T841, T874 with Q674, and others	Outside – Height: 6 1/2 in., Width: 7 1/2 in., Depth: 2 15/16 in.; Inside – Height: 5 1/16 in., Width: 6 1/16 in. (Outside – Height: 165 mm, Width: 191 mm, Depth: 75 mm; Inside – Height: 129 mm, Width: 154 mm)	T874/Q674, Others of similar size	Tradeline
TG511D1004/U	Painted metal; Ring Base – opaque polystyrene; Wallplate – Opaque Polystyrene	Medium Universal Thermostat Guard with Beige painted steel cover, opaque ring base and wallplate Fits T822, T834, T8034, T841, T874 with Q674, and others	Outside – Height: 6 1/2 in., Width: 7 3/8 in., Depth: 2 7/8 in.; Inside – Height: 5 1/16 in., Width: 6 1/16 in. (Outside – Height: 165 mm, Width: 187 mm, Depth: 73 mm; Inside – Height: 129 mm, Width: 154 mm)	TH3000 Series, TH4000 Series, TH5000 Series, TH6000 Series, TH8000 Series, Others thermostats of similar size	

TG512 Versaguard Universal Thermostat Guards

The Versaguard® Universal Thermostat Guards cover wall thermostats and protect against tampering, damage and unauthorized adjustment of thermostat settings.

- Unique double-wall construction provides extra measure of tamper-resistance.
- Used in both new and existing applications.
- Tamper-resistant lock; key cannot be removed unless in locked position.
- All models mount vertically or horizontally on wall or exposed junction box.
- Vents in guard base allow airflow for optimum thermostat performance.

Applications: Large Thermostat Guard

Accessories:
191990A – Replacement Keys (set of 2) for TG509, TG510, TG511 and TG51

Material Number	Color	Description	Dimensions	Used With	Tradeline Value
TG512A1009/U	Ring Base – clear plastic; Wallplate – Opaque Polystyrene	Large Universal Thermostat Guard with clear cover and base, and opaque wallplate Fits T8082, T8085, T8600, and most electronic thermostats	Outside – Height: 7 1/4 in., Width: 9 3/4 in., Depth: 3 3/8 in.; Inside – Height: 5 7/8 in., Width: 8 3/8 in. (Outside – Height: 184 mm, Width: 248 mm, Depth: 86 mm; Inside – Height: 149 mm, Width: 213 mm)	TH5000 Series, TH6000 Series, TH8000 Series, Others thermostats of similar size	Tradeline
TG512B1007/U	Ring Base – opaque polystyrene; Wallplate – Opaque Polystyrene	Large Universal Thermostat Guard with opaque cover, base, and wallplate Fits T8082, T8085, T8600, and most electronic thermostats	Outside – Height: 7 1/4 in., Width: 9 3/4 in., Depth: 3 3/8 in.; Inside – Height: 5 7/8 in., Width: 8 3/8 in. (Outside – Height: 184 mm, Width: 248 mm, Depth: 86 mm; Inside – Height: 149 mm, Width: 213 mm)	T8600, T8090, Others of similar size	Tradeline
TG512D1003/U	Painted metal; Ring Base – opaque polystyrene; Wallplate – Opaque Polystyrene	Large Universal Thermostat Guard with Beige painted steel cover, opaque ring base and wallplate Fits T8082, T8085, T8600, and most electronic thermostats	Outside – Height: 7 1/4 in., Width: 9 5/8 in., Depth: 3 1/4 in.; Inside – Height: 5 7/8 in., Width: 8 3/8 in. (Outside – Height: 184 mm, Width: 244 mm, Depth: 83 mm; Inside – Height: 149 mm, Width: 213 mm)	TH5000 Series, TH6000 Series, TH8000 Series, Others thermostats of similar size	

Thermostat Guard Parts

Material Number	Description	Used With
194560A/U	Replacement Keys (set of 2) for TG501	TG501

Parts and Accessories

Material Number	Color	Description	Used With	Includes	
203280AR/U	Taupe	Nameplate	T7512		
272876/H	White	White Replacement Cover for T498	T498		
32003796-001/U	Premier White®	Premier White® coverplate 7 7/8 in. (200 mm) x 5 1/2 in. (140 mm) - TH8XXX	TH8000 VisionPRO® Series Thermostats		
40426/U	White	Wall plate for Venmar 40415 or Broan 40425 controls to a junction box or cover marks	40415; 40425	1 Metal mounting plate; 1 Plastic cover plate; 4 screws	
50000066-001/U		Decorative Coverplate for T87K, T87N and T8775	T87K, T87N, T8775		
50000951-001/U	Premier White®	Replacement Battery Holder for FocusPRO TH5110 Thermostat	FocusPRO® TH5110 Thermostat		
50001137-001/U	Premier White®	Coverplate assembly for use with FocusPRO® TH5110 thermostat. Includes one small and one medium coverplate, bracket for j-boxes and mounting hardware.	FocusPRO® TH5110 Thermostat	Includes one small cover plate (4 5/16 in. x 5 1/2 in.) and one medium coverplate (5 in. x 6 7/8 in.), bracket for j-boxes and mounting hardware.	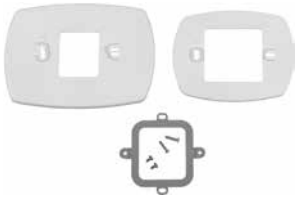
50002883-001/U	Premier White®	Coverplate assembly for use with FocusPRO® 6000/5000 and PRO 4000/3000 thermostats. Includes one medium and one large coverplate, bracket for j-boxes and mounting hardware. Medium coverplate is 5 in. x 6 7/8 in. Large coverplate is 6 in. x 8 5/16 in.	FocusPRO® 6000, 5000; PRO 4000, 3000		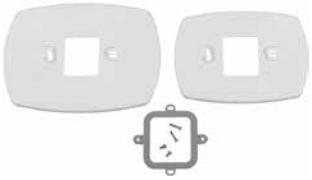
50005625-001/U	Premier White®	Premier White® Coverplate Assembly includes 4 3/4 in. (120mm) x 4 3/4 in. (120mm) coverplate, bracket for junction box mounting, mounting screws.	T812 and TS812 Thermostats		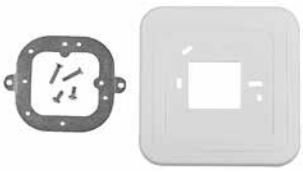
50007072-001/U	Premier White®	Replacement Battery Holder for FocusPRO TH5220, TH5320, TH6110, TH6220, and TH6320 Thermostat	FocusPRO® TH5220, TH5320, TH6110, TH6220, and TH6320 Thermostat		
50007297-001/U	Premier White®	12 pack of small coverplates for use with FocusPRO® TH5110 thermostat. Small coverplate is 4 5/16 in. x 5 ½ in.	FocusPRO® TH5110 Thermostat		

Material Number	Color	Description	Used With	Includes	
50007298-001/U	Premier White®	12 pack of medium coverplates for use with FocusPRO ® 6000/5000 and PRO 4000/3000 thermostats. Medium coverplate is 5 in. x 6 7/8 in.	FocusPRO® 6000, 5000; PRO 4000, 3000		
50010944-001/U		Range Stop Assembly for T87K, T87N, includes: range stops for degree °F and °C with screws	The Round® T87K and T87N Mercury Free Thermostats	Range stops and screws	
50022893-001/U	Premier White®	White Coverplate 5 3/4 in. (146 mm) x 7 3/8 in. (187mm)	PRO TH1000 and TH2000 Series Thermostats		
50028399-001/U	Arctic White	Premier White® Coverplate for Prestige Thermostats 7 7/8 in. (200 mm) x 5 1/2 in. (140 mm)	THX9000 Series Thermostats		
THP2100A1004/U	Premier White®	Replacement Battery Tray for UtilityPRO Thermostat	UtilityPRO T5060F, TH8320UP		
THP2400A1019/U	Arctic White	Coverplate assembly for use with the RedLINK™ VisionPRO®. Includes a coverplate, bracket for j-boxes and mounting hardware. Coverplate is 5-3/4 in. x 6-5/32 in.	VisionPRO® 8000 with RedLINK™ technology		
THP9045A1023/U	Gray	WireSaver	THX9000 Series Thermostats		

Prestige® 2-Wire IAQ Parts and Accessories

Material Number	Color	Description	Used With
THP2400A1027B/U	Black	Black Coverplate assembly for use with the Prestige® 2-Wire IAQ Thermostat. Includes one small and one large black coverplate, bracket for j-boxes and mounting hardware. Small coverplate is 4-21/64 in. x 5-33/64 in. Large coverplate is 5 in. x 6-7/8 in.	THX9421R5021BB Prestige® 2-Wire IAQ Thermostat
THP2400A1027G/U	Gray	Gray Coverplate assembly for use with the Prestige® 2-Wire IAQ Thermostats. Includes one small and one large gray coverplate, bracket for j-boxes and mounting hardware. Small coverplate is 4-21/64 in. x 5-33/64 in. Large coverplate is 5 in. x 6-7/8 in.	THX9421R5021WG Prestige® 2-Wire IAQ Thermostat
THP2400A1027W/U	White	White Coverplate assembly for use with the Prestige® 2-Wire IAQ Thermostat. Includes one small and one large white coverplate, bracket for j-boxes and mounting hardware. Small coverplate is 4-21/64 in. x 5-33/64 in. Large coverplate is 5 in. x 6-7/8 in.	THX9421R5021WW Prestige® 2-Wire IAQ Thermostat

TrueZONE® Panel

TrueZONE® HZ432 Panel for conventional, heat pump or dual fuel applications expandable up to 32 zones (3H/2C).

- Intuitive Installer setup. Easy-to-follow, digital display uses real language to guide installer through four easy steps
- Standard Checkout Procedure
- Robust Push Terminals
- Variable-Speed Fan Control
- Discharge Air Temperature Staging
- Advanced Dual-Fuel Operation
- Use with TAZ-4 Add-A-Zone to expand to 32 zones
- RedLINK™ enabled for up to 4 wireless zones when used with THM4000R1000 Wireless Adapter
- Controls up to 3 Heat/2 Cool conventional or heat pump
- Controls up to two stages compressor and two stages fossil fuel in dual fuel mode

Applications: Zoning
Comments: Intuitive advanced setup with screen
Auto Changeover: Yes
Voltage: 24V
Compatible with Sensor: Discharge Air Temperature Sensor
Resettable Fuse: Yes
Individual Zone Fan Control: Yes
Used With: Optional RedLINK wireless zoning Adapter (THM4000)

RED LINK™ Wireless Technology

Material Number	Description	Stages	Number of Zones	LEDs	Heat Pump Compatible	Emergency Heat Switch	Includes
HZ432/U	This 4-zone, expandable, TrueZONE® HZ432 panel is for 3 heat/2 cool stage applications	3 Heat/2 Cool	4 Zone, Expandable	Yes	Yes	Yes	
HZ432K/U	This 4-zone, expandable, TrueZONE® HZ432 panel is for 2 heat/2 cool stage applications	3 Heat/2 Cool	4 Zone, Expandable	Yes	Yes	Yes	HZ432 Zone Control Panel, AT140 Transformer, C7735A Discharge Air Temperature Sensor

TrueZONE® Panel

TrueZONE® HZ322 Panel for conventional and heat pump applications up to 3 zones (2H/2C).

- Intuitive Installer setup. Easy-to-follow, digital display uses real language to guide installer through four easy steps.
- Standard Checkout Procedure
- Robust Push Terminals
- Common-Sense LEDs
- Clean, Professional Installation
- Smaller Footprint
- Variable-Speed Fan Control
- Discharge Air Temperature Staging
- RedLINK™ enabled for wireless operation when used with THM4000R1000 wireless adapter
- Controls up to 2 Heat/2 Cool conventional or 2 Heat/1 Cool heat pump

Applications: Zoning
Comments: Intuitive advanced setup with screen
Auto Changeover: Yes
Voltage: 24V
Compatible with Sensor: Discharge Air Temperature Sensor
Resettable Fuse: Yes
Individual Zone Fan Control: Yes
Used With: Optional RedLINK wireless zoning Adapter (THM4000)

RED LINK™ Wireless Technology

Material Number	Description	Stages	Number of Zones	LEDs	Heat Pump Compatible	Emergency Heat Switch	Includes
HZ322/U	This 3-zone, TrueZONE® HZ322 panel is for 2 heat/2 cool stage applications	2 Heat/2 Cool	3 Zone	Yes	Yes	Yes	
HZ322K/U	This 3-zone, 2 heat/2 cool stage, TrueZONE® kit includes DATS, transformer and HZ322 panel	2 Heat/2 Cool	3 Zone	Yes	Yes	Yes	HZ322 Zone Control Panel, AT140 Transformer, C7735A Discharge Air Temperature Sensor

TrueZONE® Panel

TrueZONE® HZ311 Panel for conventional, single stage applications up to 3 zones (1H/1C).

- Robust Push Terminals
- Common-Sense LEDs
- Clean, Professional Installation
- Smaller Footprint
- Variable-Speed Fan Control

Applications: Zoning
Comments: No programming required
Auto Changeover: Yes
Voltage: 24V

Compatible with Sensor: Discharge Air Temperature Sensor
Resettable Fuse: Yes
Individual Zone Fan Control: Yes

Material Number	Description	Stages	Number of Zones	LEDs	Heat Pump Compatible	Emergency Heat Switch	Includes
HZ311/U	This 3-zone, TrueZONE® HZ311 panel is for 1 heat/1 cool stage applications	1 Heat/1 Cool	3 Zone	Yes	No	No	
HZ311K/U	This 3-zone, 1 heat/1 cool stage, TrueZONE® kit includes DATS, transformer and HZ311 panel	1 Heat/1 Cool	3 Zone	Yes	No	No	HZ311 Zone Control Panel, AT140 Transformer, C7735A Discharge Air Temperature Sensor

TrueZONE® Panel

TrueZONE® HZ221 Panel for single stage heat pumps with auxiliary heat applications up to two zones.

- Robust Push Terminals
- Common-Sense LEDs
- Clean, Professional Installation
- Smaller Footprint
- Variable-Speed Fan Control

Applications: Zoning
Comments: No programming required
Auto Changeover: Yes
Voltage: 24V

Compatible with Sensor: Discharge Air Temperature Sensor
Resettable Fuse: Yes
Individual Zone Fan Control: Yes

Material Number	Description	Stages	Number of Zones	LEDs	Heat Pump Compatible	Emergency Heat Switch	Includes
HZ221/U	This 2-zone, TrueZONE® HZ221 zoning panel is for 2heat/1cool stage applications	1 stage heat pump with auxiliary heat	2 Zone	Yes	Yes/Heat Pump Only	Yes	
HZ221K/U	This 2-zone, 2 heat/1 cool stage TrueZONE® kit includes DATS, transformer and HZ221 panel	1 stage heat pump with auxiliary heat	2 Zone	Yes	Yes/Heat Pump Only	Yes	HZ221 Zone Control Panel, AT140 Transformer, C7735A Discharge Air Temperature Sensor

TotalZONE™ Add-A-Zone (TAZ) Panel

Zone panel used to add zones to HZ432.

- Used with HZ432 TrueZONE Panel to expand number of zones.
- Use multiple TAZ-4 Control Panels to control up to 32 zones.

Applications: Zoning - add a zone panel (4-zone)
Auto Changeover: Yes
Voltage: 24V

Compatible with Sensor: Discharge Air Temperature Sensor
Resettable Fuse: Yes
Individual Zone Fan Control: Yes

Material Number	Description	Stages	Number of Zones	LEDs	Heat Pump Compatible	Emergency Heat Switch
TAZ-4/U	This 4-zone, TotalZONE® Add-A-Zone (TAZ) zone control panel is for 3 heat/2 cool stage applications	3 Heat/2 Cool	4 Zone	Yes	Yes	No

Zone Control Panel Accessories

Material Number	Description	
FPC/U	The freeze protection control (FPC) breaks the Y circuit to a compressor below 36 degrees F and remakes at 46 degrees F	
MSTN/U	MSTN is a power open, power close damper actuator	
PIRR/U	The plug-in replacement relay (PIRR) is used with legacy zone control panels, including MM-2, MM-3, MABS-3, and MARK-V	
SDCR/U	SDCR is a slave damper control relay	
SPC/U	The static pressure control (SPC) is used with MARD for bypass control	

TrueZONE Bypass Damper (CPRD)

The TrueZONE® Bypass constant pressure regulating damper (CPRD) is a round static pressure relief damper. It is used in forced-air bypass applications to relieve excess static pressure when some of the zone dampers are closed.

- Quick installation and setup
- No weight to adjust
- Can be installed in any orientation
- Engineered to provide constant system pressure regardless of changes in zones celling or blower speed

Applications: Constant Pressure Regulating (Bypass) Damper
Damper Type: Bypass
Shape: Round
Motor or Actuator Mounting: Quick connect regulator
Motor: Calibrated spring tension regulator
Motor Timing: Not Applicable
Voltage: Not Applicable
Wires to Motor: None

Material Number	Size	Description
CPRD8/U	8 in. Diameter (203 mm diameter)	8 in. Round Constant Pressure Regulating Damper
CPRD10/U	10 in. Diameter (254 mm diameter)	10 in. Round Constant Pressure Regulating Damper
CPRD12/U	12 in. Diameter (305 mm diameter)	12 in. Round Constant Pressure Regulating Damper
CPRD14/U	14 in. Diameter (356 mm diameter)	14 in. Round Constant Pressure Regulating Damper

TrueZONE Bypass Damper Replacement Regulator

The TrueZONE® Bypass constant pressure regulating damper (CPRD) is a round static pressure relief damper. It is used in forced-air bypass applications to relieve excess static pressure when some of the zone dampers are closed.

- Quick installation and setup
- No weight to adjust
- Can be installed in any orientation
- Engineered to provide constant system pressure regardless of changes in zones celling or blower speed

Motor or Actuator Mounting: Quick connect regulator
Motor: Calibrated spring tension regulator
Motor Timing: Not Applicable
Voltage: Not Applicable
Wires to Motor: None

Material Number	Applications	Description
CPR8/U	Replacement regulator for CPRD	8 in. TrueZONE Bypass replacement regulator
CPR10/U	Replacement regulator for CPRD	10 in. TrueZONE Bypass replacement regulator
CPR12/U	Replacement regulator for CPRD	12 in. TrueZONE Bypass replacement regulator
CPR14/U	Replacement regulator for CPRD	14 in. TrueZONE Bypass replacement regulator

SPRD Damper Replacement Parts

Material Number	Description
32005981-004/U	SPRD Counterweight Assembly (includes arm, coupling, and weight). Used with SPRD10, 12, 14, 16, and SPRD12x12 and 20x12

Automatic Round Damper (ARD)

Honeywell Automatic Round Damper power-close, spring-open models ensure low leakage while controlling circulating air in heating, cooling and ventilation systems.

- Features galvanized steel with single-blade damper, which closes off tightly against gasket for minimal leakage
- Designated as power closed/spring return open damper for use with Honeywell Zoning Systems
- Can be field-converted when used as an independent zone or for fresh air intake
- Rated to operate up to 1-inch wc
- Available in 5- to 10-inch, 12-, 14-, 16-, and 18-inch diameter sizes

Applications: Zone Damper
Motor Timing: 30 seconds power open/10 seconds spring return
Voltage: 24V

Wires to Motor: Terminals: M1-Power; M6 Common; M4 (optional)-LED indication
Other Motor Information: Simplified range stops

Material Number	Shape	Size	Motor or Actuator Mounting	Damper Type	Motor	Description
ARD5TZ/U	Round	5 in.	Side or Top	Single-blade, round	Power closed, spring open	5 in. Round Automatic Damper, Spring Return
ARD6TZ/U	Round	6 in. diameter (152 mm diameter)	Side or Top	Single-blade, round	Power closed, spring open	6 in. Round Automatic Damper, Spring Return
ARD7TZ/U	Round	7 in.	Side or Top	Single-blade, round	Power closed, spring open	7 in. Round Automatic Damper, Spring Return
ARD8TZ/U	Round	8 in. diameter (203 mm diameter)	Side or Top	Single-blade, round	Power closed, spring open	8 in. Round Automatic Damper, Spring Return
ARD9TZ/U	Round	9 in.	Side or Top	Single-blade, round	Power closed, spring open	9 in. Round Automatic Damper, Spring Return
ARD10TZ/U	Round	10 in. diameter (254 mm diameter)	Side or Top	Single-blade, round	Power closed, spring open	10 in. Round Automatic Damper, Spring Return
ARD12TZ/U	Round	12 in. diameter (305 mm diameter)	Side or Top	Single-blade, round	Power closed, spring open	12 in. Round Automatic Damper, Spring Return
ARD14TZ/U	Round	14 in. diameter (356 mm diameter)	Side or Top	Single-blade, round	Power closed, spring open	14 in. Round Automatic Damper, Spring Return
ARD16TZ/U	Round	16 in.	Side or Top	Single-blade, round	Power closed, spring open	16 in. Round Automatic Damper, Spring Return
ARD18TZ/U	Round	18 in.	Side or Top	Single-blade, round	Power closed, spring open	18 in. Round Automatic Damper, Spring Return
ARD20TZ/U	Round	20 in.	Side or Top		Power closed, spring open	20 in. Round Automatic Damper, Spring Return

EARD TrueZone Fresh Air Damper

The EARD is a round damper with a 24 Vac powered-open/spring-closed motor. It is used for fresh air intake for ventilation or for combustion makeup air.

- Adjustable damper position range stops.
- Single-blade damper.
- Shipped as power open/spring return closed damper.
- Galvanized steel.
- Quiet operation.
- Can be field-converted to power closed/spring return open damper.
- Blade closes off tightly against gasket for minimal leakage.
- Male (crimped) and female (uncrimped) ends to connect to any rigid or flexible round duct.

Shape: Round
Used With: Honeywell Ventilation Systems
Motor Timing: 30 seconds power closed/10 seconds spring return
Voltage: 24V

Wires to Motor: Terminals: M1-Power; M6 Common
Other Motor Information: Simplified range stops

Material Number	Application	Size	Motor or Actuator Mounting	Damper Type	Motor	Description
EARD6TZ/U	Zone Damper	6 in. diameter (152 mm diameter)	Side or Top	Single-blade, round	Power open, spring closed	6 in. Round Fresh Air Damper, Spring Return
EARD8TZ/U	Ventilation Damper	8 in. diameter (203 mm diameter)	Side or Top	Single-blade, round	Power open, spring closed	8 in. Round Fresh Air Damper

Modulating Automatic Round Dampers (MARD)

The MARD series damper is a power opened/closed, zone or bypass damper. It is usually used in light commercial applications on systems larger than 5 tons that do not exceed 2 in. W.C. at the damper, but may be used in any residential system as well.

- Uses 90-second open to closed motor.
- Can be used as a zone damper.
- ML6161 is replacement motor.
- Available in 5, 6, 7, 8, 9, 10, 12, 14, 16, and 18 in. diameter sizes.
- Used with Static Pressure Control (SPC) for bypass applications.

Applications: Motorized Bypass or Zone Damper
Motor Timing: 90 seconds
Voltage: 24V
Wires to Motor: 3

Material Number	Shape	Size	Motor or Actuator Mounting	Damper Type	Motor	Description
MARD6/U	Round	6 in.	Side or Top		Floating	6 in. Round Modulating Power Open, Power Close Damper
MARD8/U	Round	8 in.	Side or Top		Floating	8 in. Round Modulating Power Open, Power Close Damper
MARD10/U	Round	10 in. diameter (254 mm diameter)	Side or Top	Single-blade, round	Floating	10 in. Round Modulating Power Open, Power Close Damper
MARD12/U	Round	12 in. diameter (305 mm diameter)	Side or Top	Single-blade, round	Floating	12 in. Round Modulating Power Open, Power Close Damper
MARD14/U	Round	14 in. diameter (356 mm diameter)	Side or Top	Single-blade, round	Floating	14 in. Round Modulating Power Open, Power Close Damper
MARD16/U	Round	16 in. diameter (406 mm diameter)	Side or Top	Single-blade, round	Floating	16 in. Round Modulating Power Open, Power Close Damper
MARD18/U	Round	18 in.	Side or Top		Floating	18 in. Round Modulating Power Open, Power Close Damper

Retrofit Round Damper (RRD)

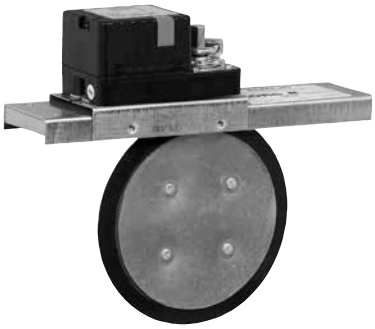

The RRD is a round damper that is easily inserted into rigid round ducts for retrofit zoning in forced air heating and cooling systems. This power open, power closed damper actuator is available in four sizes for 5 in., 6 in., 7 in., and 8 in. ducts.

- Easy slide-in installation
- 2.5 VA allows for many dampers on one zone
- Available in 4 sizes to fit most rigid round branch ducts
- Quiet, long life motor automatically shuts itself off in full open and closed positions
- Gaskets around blade and under motor housing for low internal leakage and very low external leakage
- Range stops with easy adjustment from top of motor
- Easy to see and reliable mechanical blade position indicator
- Easy to hook up with conventional thermostat wire
- Simple manual blade positioning with push button gear release

Applications: Zone Damper
Motor Timing: 90 seconds
Voltage: 24V
Wires to Motor: 3
Other Motor Information: Range stops

Material Number	Shape	Size	Motor or Actuator Mounting	Damper Type	Motor	Description
RRD5/U	Round	5 inch	Direct connection to damper shaft	Retrofit	Power open/Power close	5 in. Retrofit Round Damper
RRD6/U	Round	6 inch	Direct connection to damper shaft	Retrofit	Power open/Power close	6 in. Retrofit Round Damper
RRD7/U	Round	7 inch	Direct connection to damper shaft	Retrofit	Power open/Power close	7 in. Retrofit Round Damper
RRD8/U	Round	8 inch	Direct connection to damper shaft	Retrofit	Power open/Power close	8 in. Retrofit Round Damper

ZD Series Dampers

The ZD is a power close and spring open damper. It has a 24-volt motor used to control circulating air in HVAC systems and used when a normally-open damper is required. The ZD is typically used with the TrueZONE and other electronic zoning systems.

- Mechanical visual position indicator for damper status.
- Solid construction using extruded aluminum frame and blades.
- Parallel blade design for low leakage performance.
- Simple, easy-to-wire, two-wire installation.
- Reliable, strong, 24-volt spring-return motor.
- Fail-safe, normally open operation.
- Ordering Instructions: Order ZD (dimension 1) x (dimension 2). (Motor is always mounted on dimension 2 side.) For example, ZD10x8 is a 10 in. x 8 in. damper with the motor on the 8 in. side; but a ZD8x10 is an 8 in. x 10 in. damper that has the motor on the 10 in. side.
- Damper can be installed in any orientation (mounting side can be on either the bottom or the side of the duct).

Applications: Parallel Blade Damper
Blade Action: Parallel
Motor Timing: 30 seconds power open/10 seconds spring return
Voltage: 24V

Wires to Motor: Terminals: M1-Power; M6 Common; M4 (optional)-LED indication
Other Motor Information: Simplified range stops

Material Number	Shape	Size	Motor or Actuator Mounting	Motor	Used With
ZD10X10TZ/U	Square	10 in. x 10 in.	Side	power closed, spring open	Honeywell zoning systems
ZD10X12TZ/U	Rectangular	10 in. x 12 in.	Bottom	power closed, spring open	Honeywell zoning systems
ZD10X14TZ/U	Rectangular	10 in. x 14 in.	Bottom	power closed, spring open	Honeywell zoning systems
ZD10X16TZ/U	Rectangular	10 in. x 16 in.	Bottom	power closed, spring open	Honeywell zoning systems
ZD10X18TZ/U	Rectangular	10 in. x 18 in.	Bottom	power closed, spring open	Honeywell zoning systems
ZD10X20TZ/U	Rectangular	10 in. x 20 in.	Bottom	power closed, spring open	Honeywell zoning systems
ZD10X22TZ/U	Rectangular	10 in. x 22 in.	Bottom	power closed, spring open	Honeywell zoning systems
ZD10X24TZ/U	Rectangular	10 in. x 24 in.	Bottom	power closed, spring open	Honeywell zoning systems
ZD10X26TZ/U	Rectangular	10 in. x 26 in.	Bottom	power closed, spring open	Honeywell zoning systems
ZD10X28TZ/U	Rectangular	10 in. x 28 in.	Bottom	power closed, spring open	Honeywell zoning systems
ZD10X6TZ/U	Rectangular	10 in. x 6 in.	Side	power closed, spring open	Honeywell zoning systems
ZD10X8TZ/U	Rectangular	10 in. x 8 in.	Side	power closed, spring open	Honeywell zoning systems
ZD12X10TZ/U	Rectangular	12 in. x 10 in.	Side	power closed, spring open	Honeywell zoning systems
ZD12X12TZ/U	Square	12 in. x 12 in.	Side	power closed, spring open	Honeywell zoning systems
ZD12X14TZ/U	Rectangular	12 in. x 14 in.	Bottom	power closed, spring open	Honeywell zoning systems
ZD12X16TZ/U	Rectangular	12 in. x 16 in.	Bottom	power closed, spring open	Honeywell zoning systems
ZD12X18TZ/U	Rectangular	12 in. x 18 in.	Bottom	power closed, spring open	Honeywell zoning systems
ZD12X20TZ/U	Rectangular	12 in. x 20 in.	Bottom	power closed, spring open	Honeywell zoning systems
ZD12X22TZ/U	Rectangular	12 in. x 22 in.	Bottom	power closed, spring open	Honeywell zoning systems
ZD12X24TZ/U	Rectangular	12 in. x 24 in.	Bottom	power closed, spring open	Honeywell zoning systems
ZD12X26TZ/U	Rectangular	12 in. x 26 in.	Bottom	power closed, spring open	Honeywell zoning systems
ZD12X28TZ/U	Rectangular	12 in. x 28 in.	Bottom	power closed, spring open	Honeywell zoning systems
ZD12X6TZ/U	Rectangular	12 in. x 6 in.	Side	power closed, spring open	Honeywell zoning systems
ZD12X8TZ/U	Rectangular	12 in. x 8 in.	Side	power closed, spring open	Honeywell zoning systems
ZD14X10TZ/U	Rectangular	14 in. x 10 in.	Side	power closed, spring open	Honeywell zoning systems
ZD14X12TZ/U	Rectangular	14 in. x 12 in.	Side	power closed, spring open	Honeywell zoning systems
ZD14X14TZ/U	Square	14 in. x 14 in.	Side	power closed, spring open	Honeywell zoning systems
ZD14X16TZ/U	Rectangular	14 in. x 16 in.	Bottom	power closed, spring open	Honeywell zoning systems
ZD14X18TZ/U	Rectangular	14 in. x 18 in.	Bottom	power closed, spring open	Honeywell zoning systems
ZD14X20TZ/U	Rectangular	14 in. x 20 in.	Bottom	power closed, spring open	Honeywell zoning systems
ZD14X22TZ/U	Rectangular	14 in. x 22 in.	Bottom	power closed, spring open	Honeywell zoning systems
ZD14X24TZ/U	Rectangular	14 in. x 24 in.	Bottom	power closed, spring open	Honeywell zoning systems
ZD14X26TZ/U	Rectangular	14 in. x 26 in.	Bottom	power closed, spring open	Honeywell zoning systems
ZD14X28TZ/U	Rectangular	14 in. x 28 in.	Bottom	power closed, spring open	Honeywell zoning systems
ZD14X6TZ/U	Rectangular	14 in. x 6 in.	Side	power closed, spring open	Honeywell zoning systems
ZD14X8TZ/U	Rectangular	14 in. x 8 in.	Side	power closed, spring open	Honeywell zoning systems
ZD16X10TZ/U	Rectangular	16 in. x 10 in.	Side	power closed, spring open	Honeywell zoning systems
ZD16X12TZ/U	Rectangular	16 in. x 12 in.	Side	power closed, spring open	Honeywell zoning systems
ZD16X14TZ/U	Rectangular	16 in. x 14 in.	Side	power closed, spring open	Honeywell zoning systems
ZD16X16TZ/U	Square	16 in. x 16 in.	Side	power closed, spring open	Honeywell zoning systems
ZD16X18TZ/U	Rectangular	16 in. x 18 in.	Bottom	power closed, spring open	Honeywell zoning systems
ZD16X20TZ/U	Rectangular	16 in. x 20 in.	Bottom	power closed, spring open	Honeywell zoning systems
ZD16X22TZ/U	Rectangular	16 in. x 22 in.	Bottom	power closed, spring open	Honeywell zoning systems

Zone Control Dampers

Material Number	Shape	Size	Motor or Actuator Mounting	Motor	Used With
ZD16X24TZ/U	Rectangular	16 in. x 24 in.	Bottom	power closed, spring open	Honeywell zoning systems
ZD16X26TZ/U	Rectangular	16 in. x 26 in.	Bottom	power closed, spring open	Honeywell zoning systems
ZD16X6TZ/U	Rectangular	16 in. x 6 in.	Side	power closed, spring open	Honeywell zoning systems
ZD16X8TZ/U	Rectangular	16 in. x 8 in.	Side	power closed, spring open	Honeywell zoning systems
ZD18X10TZ/U	Rectangular	18 in. x 10 in.	Side	power closed, spring open	Honeywell zoning systems
ZD18X12TZ/U	Rectangular	18 in. x 12 in.	Side	power closed, spring open	Honeywell zoning systems
ZD18X14TZ/U	Rectangular	18 in. x 14 in.	Side	power closed, spring open	Honeywell zoning systems
ZD18X16TZ/U	Rectangular	18 in. x 16 in.	Side	power closed, spring open	Honeywell zoning systems
ZD18X18TZ/U	Square	18 in. x 18 in.	Side	power closed, spring open	Honeywell zoning systems
ZD18X20TZ/U	Rectangular	18 in. x 20 in.	Bottom	power closed, spring open	Honeywell zoning systems
ZD18X22TZ/U	Rectangular	18 in. x 22 in.	Bottom	power closed, spring open	Honeywell zoning systems
ZD18X24TZ/U	Rectangular	18 in. x 24 in.	Bottom	power closed, spring open	Honeywell zoning systems
ZD18X26TZ/U	Rectangular	18 in. x 26 in.	Bottom	power closed, spring open	Honeywell zoning systems
ZD18X6TZ/U	Rectangular	18 in. x 6 in.	Side	power closed, spring open	Honeywell zoning systems
ZD18X8TZ/U	Rectangular	18 in. x 8 in.	Side	power closed, spring open	Honeywell zoning systems
ZD20X10TZ/U	Rectangular	20 in. x 10 in.	Side	power closed, spring open	Honeywell zoning systems
ZD20X12TZ/U	Rectangular	20 in. x 12 in.	Side	power closed, spring open	Honeywell zoning systems
ZD20X14TZ/U	Rectangular	20 in. x 14 in.	Side	power closed, spring open	Honeywell zoning systems
ZD20X16TZ/U	Rectangular	20 in. x 16 in.	Side	power closed, spring open	Honeywell zoning systems
ZD20X18TZ/U	Rectangular	20 in. x 18 in.	Side	power closed, spring open	Honeywell zoning systems
ZD20X20TZ/U	Square	20 in. x 20 in.	Side	power closed, spring open	Honeywell zoning systems
ZD20X22TZ/U	Rectangular	20 in. x 22 in.	Bottom	power closed, spring open	Honeywell zoning systems
ZD20X24TZ/U	Rectangular	20 in. x 24 in.	Bottom	power closed, spring open	Honeywell zoning systems
ZD20X6TZ/U	Rectangular	20 in. x 6 in.	Side	power closed, spring open	Honeywell zoning systems
ZD20X8TZ/U	Rectangular	20 in. x 8 in.	Side	power closed, spring open	Honeywell zoning systems
ZD22X10TZ/U	Rectangular	22 in. x 10 in.	Side	power closed, spring open	Honeywell zoning systems
ZD22X12TZ/U	Rectangular	22 in. x 12 in.	Side	power closed, spring open	Honeywell zoning systems
ZD22X14TZ/U	Rectangular	22 in. x 14 in.	Side	power closed, spring open	Honeywell zoning systems
ZD22X16TZ/U	Rectangular	22 in. x 16 in.	Side	power closed, spring open	Honeywell zoning systems
ZD22X18TZ/U	Rectangular	22 in. x 18 in.	Side	power closed, spring open	Honeywell zoning systems
ZD22X20TZ/U	Rectangular	22 in. x 20 in.	Side	power closed, spring open	Honeywell zoning systems
ZD22X22TZ/U	Square	22 in. x 22 in.	Side	power closed, spring open	Honeywell zoning systems
ZD22X24TZ/U	Rectangular	22 in. x 24 in.	Bottom	power closed, spring open	Honeywell zoning systems
ZD22X6TZ/U	Rectangular	22 in. x 6 in.	Side	power closed, spring open	Honeywell zoning systems
ZD22X8TZ/U	Rectangular	22 in. x 8 in.	Side	power closed, spring open	Honeywell zoning systems
ZD24X10TZ/U	Rectangular	24 in. x 10 in.	Side	power closed, spring open	Honeywell zoning systems
ZD24X12TZ/U	Rectangular	24 in. x 12 in.	Side	power closed, spring open	Honeywell zoning systems
ZD24X14TZ/U	Rectangular	24 in. x 14 in.	Side	power closed, spring open	Honeywell zoning systems
ZD24X16TZ/U	Rectangular	24 in. x 16 in.	Side	power closed, spring open	Honeywell zoning systems
ZD24X18TZ/U	Rectangular	24 in. x 18 in.	Side	power closed, spring open	Honeywell zoning systems
ZD24X20TZ/U	Rectangular	24 in. x 20 in.	Side	power closed, spring open	Honeywell zoning systems
ZD24X22TZ/U	Rectangular	24 in. x 22 in.	Side	power closed, spring open	Honeywell zoning systems
ZD24X24TZ/U	Square	24 in. x 24 in.	Side	power closed, spring open	Honeywell zoning systems
ZD24X6TZ/U	Rectangular	24 in. x 6 in.	Side	power closed, spring open	Honeywell zoning systems
ZD24X8TZ/U	Rectangular	24 in. x 8 in.	Side	power closed, spring open	Honeywell zoning systems
ZD26X10TZ/U	Rectangular	26 in. x 10 in.	Side	power closed, spring open	Honeywell zoning systems
ZD26X12TZ/U	Rectangular	26 in. x 12 in.	Side	power closed, spring open	Honeywell zoning systems
ZD26X14TZ/U	Rectangular	26 in. x 14 in.	Side	power closed, spring open	Honeywell zoning systems
ZD26X16TZ/U	Rectangular	26 in. x 16 in.	Side	power closed, spring open	Honeywell zoning systems
ZD26X18TZ/U	Rectangular	26 in. x 18 in.	Side	power closed, spring open	Honeywell zoning systems
ZD26X20TZ/U	Rectangular	26 in. x 20 in.	Side	power closed, spring open	Honeywell zoning systems
ZD26X8TZ/U	Rectangular	26 in. x 8 in.	Side	power closed, spring open	Honeywell zoning systems
ZD28X10TZ/U	Rectangular	28 in. x 10 in.	Side	power closed, spring open	Honeywell zoning systems
ZD28X12TZ/U	Rectangular	28 in. x 12 in.	Side	power closed, spring open	Honeywell zoning systems
ZD28X14TZ/U	Rectangular	28 in. x 14 in.	Side	power closed, spring open	Honeywell zoning systems
ZD28X16TZ/U	Rectangular	28 in. x 16 in.	Side	power closed, spring open	Honeywell zoning systems
ZD28X20TZ/U	Rectangular	28 in. x 20 in.	Side	power closed, spring open	Honeywell zoning systems
ZD28X6TZ/U	Rectangular	28 in. x 6 in.	Side	power closed, spring open	Honeywell zoning systems
ZD28X8TZ/U	Rectangular	28 in. x 8 in.	Side	power closed, spring open	Honeywell zoning systems
ZD6X10TZ/U	Rectangular	6 in. x 10 in.	Bottom	power closed, spring open	Honeywell zoning systems
ZD6X12TZ/U	Rectangular	6 in. x 12 in.	Bottom	power closed, spring open	Honeywell zoning systems
ZD6X14TZ/U	Rectangular	6 in. x 14 in.	Bottom	power closed, spring open	Honeywell zoning systems
ZD6X16TZ/U	Rectangular	6 in. x 16 in.	Bottom	power closed, spring open	Honeywell zoning systems

Material Number	Shape	Size	Motor or Actuator Mounting	Motor	Used With
ZD6X18TZ/U	Rectangular	6 in. x 18 in.	Bottom	power closed, spring open	Honeywell zoning systems
ZD6X20TZ/U	Rectangular	6 in. x 20 in.	Bottom	power closed, spring open	Honeywell zoning systems
ZD6X22TZ/U	Rectangular	6 in. x 22 in.	Bottom	power closed, spring open	Honeywell zoning systems
ZD6X24TZ/U	Rectangular	6 in. x 24 in.	Bottom	power closed, spring open	Honeywell zoning systems
ZD6X28TZ/U	Rectangular	6 in. x 28 in.	Bottom	power closed, spring open	Honeywell zoning systems
ZD6X6TZ/U	Square	6 in. x 6 in.	Side	power closed, spring open	Honeywell zoning systems
ZD6X8TZ/U	Rectangular	6 in. x 8 in.	Bottom	power closed, spring open	Honeywell zoning systems
ZD8X10TZ/U	Rectangular	8 in. x 10 in.	Bottom	power closed, spring open	Honeywell zoning systems
ZD8X12TZ/U	Rectangular	8 in. x 12 in.	Bottom	power closed, spring open	Honeywell zoning systems
ZD8X14TZ/U	Rectangular	8 in. x 14 in.	Bottom	power closed, spring open	Honeywell zoning systems
ZD8X16TZ/U	Rectangular	8 in. x 16 in.	Bottom	power closed, spring open	Honeywell zoning systems
ZD8X18TZ/U	Rectangular	8 in. x 18 in.	Bottom	power closed, spring open	Honeywell zoning systems
ZD8X20TZ/U	Rectangular	8 in. x 20 in.	Bottom	power closed, spring open	Honeywell zoning systems
ZD8X22TZ/U	Rectangular	8 in. x 22 in.	Bottom	power closed, spring open	Honeywell zoning systems
ZD8X24TZ/U	Rectangular	8 in. x 24 in.	Bottom	power closed, spring open	Honeywell zoning systems
ZD8X26TZ/U	Rectangular	8 in. x 26 in.	Bottom	power closed, spring open	Honeywell zoning systems
ZD8X28TZ/U	Rectangular	8 in. x 28 in.	Bottom	power closed, spring open	Honeywell zoning systems
ZD8X6TZ/U	Rectangular	8 in. x 6 in.	Side	power closed, spring open	Honeywell zoning systems
ZD8X8TZ/U	Square	8 in. x 8 in.	Side	power closed, spring open	Honeywell zoning systems

Zoning Damper Accessories

Material Number	Description	Includes
32006184-001/U	Filler strip kit used to install ZD dampers in odd sized ducts	1 1/8 in. x 3/4 in. adhesive-backed foam strips

M847D Damper Actuator

The M847D is a two position, 24 Vac spring return actuator designed to operate ARD, EARD and ZD zone dampers.

- Low voltage, spring return damper actuator.
- Equipped with anti-rotation and drive shaft extensions for direct mounting to 7/16 inch diameter coupling style dampers.
- Adjustable range stops.
- Direct replacement for M847D1004

Applications: Replacement motor for EARD ventilation damper
Motor Timing: 30 seconds power closed/10 seconds spring return
Voltage: 24V

Wires to Motor: Terminals: M1-Power; M6 Common; M4 (optional)-LED indication
Other Motor Information: Simplified range stops

Material Number	Description	Motor	Used With
M847D-VENT/U	Replacement motor for EARD ventilation damper, Power open spring close, 24V	Power open, spring closed	EARD
M847D-ZONE/U	Replacement motor for ARD and ZD zone dampers, Power close spring open, 24V	Power closed, spring open	ARD, ARDTZ, ZD, ZDTZ

AT140 Universal Mount Transformer

The AT140 is a 24V, 40 VA universal mount transformer.

- Provides a low voltage power source for any Honeywell zone control panel or damper
- Powers up to 5 ZD or ARD damper motors and 14 RRD damper motors from one 40VA transformer
- Mounting options include plate or foot mounting
- 120/240 VAC primary

Frequency: 60 Hz
Mounting: Universal (Plate, Foot or Knockout)
Electrical Connections (Primary): 9 in. leadwires (229 mm leadwires)
Electrical Connections (Secondary): (2) screw terminals

Electrical Ratings, Output: 24 Vac at 40 VA
Approvals, Underwriters Laboratories Inc.: UL Listed
Approvals, CSA: CSA Listed
Temperature Range (C): -29°C to +41°C (-20°F to +105°F)

Material Number	Description	Electrical Ratings
AT140A1042/U	AT140A1042 is an AT140 universal mount transformer	Primary voltage – 208 Vac, 240 Vac; Secondary voltage – 24V

EconoSwitch™ Programmable Wall Switch

When it comes to automatically controlling outdoor or indoor lights, pool pumps or fans, Honeywell's EconoSwitches™ ease of use and sleek design makes them much appreciated by homeowners while contractors enjoy their easy installation. Honeywell's line of Switches and Timers are synonymous with reliability and convenience while enabling energy savings and providing security to homeowners.

- Easy-to-use interface
- For lighting, fan, pumps, and motors installations
- Buttons hidden by panel that acts as on-off switch

Voltage: 120 Vac
Frequency: 50 Hz; 60 Hz
Ambient Temperature Range: Operating: 5°F to 122°F (Operating: -15°C to 50°C)
Shipping and Storage Temperature Range: -4°F to 122°F (-20°C to 50°C)
Operating Mode: Manual (conventional on/off switch); Automatic
Programmability: Weekly/Daily Programming (7 on, 7 off)
Dimensions, Approximate: 1-13/16 in. wide x 2-23/32 in. high x 1-19/32 in. deep (43 mm wide x 68 mm high x 40 mm deep)
Approvals, CSA: Approved
Approvals, Underwriters Laboratories Inc.: Approved
Comments: Programming protected during power outages

Material Number	Applications	Electrical Connections	Electrical Ratings	Electrical Ratings (Motor)	Description
PLS530A1008/U	Incandescent lights; Halogen lights; Fluorescent lights, not compatible with CFL's and LED's	Single pole 2 wire; Multiswitch (3-way), 3 wires	Maximum and Resistive Load – 500 W @ 120 V, 40 W min.		Weekly/Daily Programmable wall switch for lights, white
PLS531A1006/U	Incandescent lights; Halogen lights; Fluorescent lights, not compatible with CFL's and LED's	Single pole 2 wire; Multiswitch (3-way), 3 wires	Maximum and Resistive Load – 500 W @ 120 V, 40 W min.		Weekly/Daily Programmable wall switch for lights, light almond
PLS730B1003/U	Incandescent lights; Halogen lights; Fluorescent lights; Electronic ballasts, compatible with CFL's and LED's; Motors (up to 1 HP) PLS730Bxxxx ARE compatible with CFL's and LED's	Single pole 3 wire (line, load, neutral)	Maximum and Resistive Load – 2400 W resistive or inductive; Inductive Load – 20 A @ 120 V	1 HP @ 120 Vac	Weekly/Daily Programmable wall switch for all types of lighting and motors up to 1 HP, white
PLS731B1001/U	Incandescent lights; Halogen lights; Fluorescent lights; Electronic ballasts, compatible with CFL's and LED's; Motors (up to 1 HP)	Single pole 3 wire (line, load, neutral)	Maximum and Resistive Load – 2400 W resistive or inductive; Inductive Load – 20 A @ 120 V	1 HP @ 120 Vac	Weekly/Daily Programmable wall switch for all types of lighting and motors up to 1 HP, light almond

EconoSwitch™ Programmable Wall Switch with Solar Timetable

When it comes to automatically controlling outdoor or indoor lights, pool pumps or fans, Honeywell's EconoSwitches™ ease of use and sleek design makes them much appreciated by homeowners while contractors enjoy their easy installation. Honeywell's line of Switches and Timers are synonymous with reliability and convenience while enabling energy savings and providing security to homeowners.

- Easy-to-use interface
- Random Mode for improved house security
- For lighting, fan, pumps, and motors installations
- Solar timetable programming available
- Large backlit screen
- Two hours battery backup for power outage

Voltage: 120 Vac
Frequency: 60 Hz
Ambient Temperature Range: Operating: 5°F to 122°F (Operating: -15°C to 50°C)
Shipping and Storage Temperature Range: -40°F to 140°F (-40°C to 60°C)
Operating Mode: Manual (conventional on/off switch); Automatic; Random
Programmability: Weekly/Daily Programming (21 on, 21 off); Solar timetable; Random
Dimensions, Approximate: 1-13/16 in. wide x 2-23/32 in. high x 1-13/16 in. deep (43 mm wide x 68 mm high x 43 mm deep)
Approvals, Underwriters Laboratories Inc.: Approved
Approvals, Canadian Underwriters Laboratories Inc.: Approved
Comments: White backlit screen; Hidden lock

Material Number	Applications	Electrical Connections	Electrical Ratings	Electrical Ratings (Motor)	Description
PLS550A1006/U	Incandescent lights; Halogen lights; Fluorescent lights, not compatible with CFL's and LED's	Single pole 2 wire; Multiswitch (3-way), 3 wire	Maximum and Resistive Load – 500 W @ 120 V, 40 W min.		7-Day programmable wall switch with solar timetable for lights, white
PLS551A1004/U	Incandescent lights; Halogen lights; Fluorescent lights, not compatible with CFL's and LED's	Single pole 2 wire; Multiswitch (3-way), 3 wire	Maximum and Resistive Load – 500 W @ 120 V, 40 W min.		7-Day programmable wall switch with solar timetable for lights, light almond
PLS750C1000/U	Incandescent lights; Halogen lights; Fluorescent lights; Electronic ballasts, compatible with CFL's and LED's; Motors (up to 1 HP) PLS750Cxxxx ARE compatible with CFL's and LED's	Single pole 3 wire (line, load, neutral); Multiswitch (3-way), 4 wire (line, load, neutral, three-way)	Maximum Load – 15 A @ 120 Vac 1800 W resistive 12 A @ 120 Vac 1440 W (Tungsten lights) No minimum load	1 HP @ 120 Vac	7-Day programmable wall switch with solar timetable for all types of lighting and motors up to 1 HP, white
PLS751C1008/U	Incandescent lights; Halogen lights; Fluorescent lights; Electronic ballasts, compatible with CFL's and LED's; Motors (up to 1 HP)	Single pole 3 wire (line, load, neutral); Multiswitch (3-way), 4 wire (line, load, neutral, three-way)	Maximum Load – 15 A @ 120 Vac 1800 W resistive 12 A @ 120 Vac 1440 W (Tungsten lights) No minimum load	1 HP @ 120 Vac	7-Day programmable wall switch with solar timetable for all types of lighting and motors up to 1 HP, light almond

TI035 Solar Programmable Switch for Lights & Motors

This easy-to-install switch handles motors, all types of lighting, and features solar timetable programming to turn lights on at sunset and off at sunrise.

- Sleek design mounts flush with wallplate
- Works with motors and all types of lighting (compatible with electronic ballasts, CFL's and LED's and tungsten lighting up to 5A)
- LCD shows time, day and load status
- Installs in standard Decora-style wallplate (not included)
- Manual override turns load on/off without affecting programming
- Three-wire installation (requires line and neutral wires)
- Built-in rechargeable battery
- Programming protected during power outages for 30 days

Voltage: 120 Vac
Frequency: 50 Hz; 60 Hz
Electrical Connections: Single pole 3 wire (line, load, neutral)
Operating Mode: Manual (conventional on/off switch); Automatic
Programmability: Solar timetable + 2 optional settings (1 on, 1 off) or 4 optional settings (2 on, 2 off)
Electrical Ratings: Maximum Load – 20 A @ 120 V 2400 W resistive. Inductive load: 20 A @ 120Vac
Electrical Ratings, Motor: 1 HP @ 120 Vac
Ambient Temperature Range: Operating: 5°F to 122°F (Operating: -15°C to 50°C)
Shipping and Storage Temperature Range: -4°F to 122°F (-20°C to 50°C)
Dimensions: 1-13/16 in. wide x 2-23/32 in. high x 1-19/32 in. deep (44 mm wide x 68 mm high x 40 mm deep)
Comments: Programming protected during power outages; Single pole, 3 wires (line, load, neutral)
Approvals, CSA: Approved
Approvals, Underwriters Laboratories Inc.: Approved

Material Number	Applications	Description
TI035/U	Incandescent lights; Halogen lights; Fluorescent lights; CFL's and LED's; Electronic ballasts; Motors (up to 1 HP)	Programmable wall switch with solar timetable for all types of lighting and motors up to 1 HP, white

TI040 Industrial Weekly/Daily Programmable Indoor & Outdoor Timer for Lights and Motors

This powerful programmable timer allows the user to choose 120 or 240 V.

- Heavy-duty weather-proof casing (NEMA 3R) ideal for outdoor use
- Selectable voltage switch enables choice of 120 or 240 V
- Lockable casing for increased security
- Temporary bypass enables override without affecting programming
- Compatible with 3-way switches
- Programming protected during power outage for 30 days

Voltage: 120 Vac; 240 Vac; 208 Vac
Frequency: 50 Hz; 60 Hz
Electrical Connections: Terminals for #14 to #10 AWG wire; Multiswitch (3-way) compatible
Operating Mode: Manual (conventional on/off switch); Automatic
Programmability: Weekly/Daily Programming (7 on, 7 off)
Electrical Ratings: Maximum Load – 30 A (resistive), 10 A (ballast); Inductive Load – 10 A @ 120/240 Vac; Resistive Load – 3600 W (30 A @ 120 Vac); 7200 W (30 A @ 240 Vac)
Electrical Ratings, Motor: 1.5 HP @ 120 Vac; 2 HP @ 240 Vac
Ambient Temperature Range: Operating: -40°F to 122°F (Operating: -40°C to 50°C)
Shipping and Storage Temperature Range: -4°F to 122°F (-20°C to 50°C)
Dimensions: 9-13/32 in. wide x 7-7/32 in. high x 4 in. deep (238 mm wide x 182 high mm x 102 mm deep)
Comments: Field-selectable voltage (120 V or 240 V); Lockable NEMA 3R casing; 3-way input; Programming protected during power outages
Approvals, CSA: Approved
Approvals, Underwriters Laboratories Inc.: Approved

Material Number	Applications	Description
TI040/U	All types of lighting; Motors up to 1.5 HP	Industrial Weekly/Daily Programmable Indoor & Outdoor Timer for all types of lighting and motors up to 1.5 HP (120 V) or 2 HP (240 V)

TI044 Industrial Solar Programmable Indoor & Outdoor Timer for Lights and Motors

The powerful TI044 accepts two loads and features solar programming - ideal for outdoor lighting.

- Heavy-duty weather-proof casing (NEMA 3R) ideal for outdoor use
- Solar programming automatically turns lights on at sunset and off at sunrise
- Lockable casing for increased security
- Temporary bypass enables override without affecting programming
- Compatible with 3-way switches
- Programming protected during power outage for 30 days

Voltage: 120 Vac
Frequency: 50 Hz; 60 Hz
Electrical Connections: Terminals for #14 to #10 AWG wire; Multiswitch (3-way) compatible
Operating Mode: Manual (conventional on/off switch); Automatic
Programmability: Solar timetable + 2 optional settings (1 on, 1 off)
Electrical Ratings: Maximum Load – 30 A (resistive), 10 A (ballast); Inductive Load – 10 A @ 120 Vac; Resistive Load – 3600 W (30 A @ 120 Vac)
Electrical Ratings, Motor: 1.5 HP @ 120 Vac
Ambient Temperature Range: Operating: -40°F to 122°F (Operating: -40°C to 50°C)
Shipping and Storage Temperature Range: -4°F to 122°F (-20°C to 50°C)
Dimensions: 9-13/32 in. wide x 7-7/32 in. high x 4 in. deep (238 mm wide x 182 high mm x 102 mm deep)
Comments: Programming protected during power outages; Lockable NEMA 3R casing; 3-way input. Load 1 is either solar or fix time selected by user. Load 2 is exclusively sunset to sunrise without the possibility of being overridden.
Approvals, CSA: Approved
Approvals, Underwriters Laboratories Inc.: Approved

Material Number	Applications	Description
TI044/U	All types of lighting; Motors up to 1.5 HP	Industrial Programmable Indoor & Outdoor Timer for all types of lighting and motors up to 1.5 HP, with solar timetable and 2 optional settings

F300 High Efficiency Electronic Air Cleaner

F300 optimizes efficiency with airflow capturing up to 98% of particles that pass through it. It operates with all gas, oil and electric forced warm air furnaces and AC systems, and is available in four sizes to fit most ducts.

- Media post-filter provides enhanced filtration on select models.
- Solid state power supply is self-regulating and maintains peak efficiency during a wide range of cell dirt loading conditions.
- Low-profile door with test button to check system operation.
- Helps filter efficiency-robbing “gunk” before it coats critical system parts.
- Very low pressure drop.
- Exclusive 10-year Clean Coil Guarantee.
- Rugged zinc-coated, roll-formed cabinet provides superior strength and corrosion protection.

Applications: Duct mounted
Type of Air Cleaner: Electronic Air Cleaner
Efficiency Standard: Efficiency ranges are defined for small particles, E1=0.3 to 1.0 microns; medium particles, E2=1.0 to 3.0 microns; and large particles, E3=3.0 to 10.0 microns. Efficiency ratings are based on American Society of Heating, Refrigerating and Air-Conditioning Engineers Standard 52.2-1999
Electrical Ratings: 120 Vac, 0.4A max.
Frequency: 60 Hz
Additional Features: Includes high air flow post filter to enhance filtration performance.
Approvals, Underwriters Laboratories Inc.: Listed: Report E30954
Tradeline Value: Tradeline
Comments: Enhanced Filtration

Accessories:
W8600A1007 – AIRWATCH indicator for use with F100F, F200 or F300A, E
W8600F1014 – White EAC Performance indicator for use with F50F or F300E

Replacement Parts:
4074EHG – FC37A Terminal Board Repair Kit. Contains 2 connector clips, 1 Terminal Board and instruction sheet
FC37A1049 – Electronic Air Cleaner Cell, 9.8 x 20
FC37A1064 – Electronic Air Cleaner Cell, 12.4 x 20
FC37A1114 – Electronic Air Cleaner Cell, 9.8 x 16
FC37A1130 – Electronic Air Cleaner Cell, 12.4 x 16
203365A – Conversion Kit for changing 120V Power Supply to 240V
50000293-001 – 16 x 10 Post Filter for 16 x 20 F300E and F50F
50000293-002 – 16 x 12.5 Post Filter for 16 x 25 F300E and F50F
50000293-003 – 20 x 10 Post Filter for 20 x 20 F300E and F50F
50000293-004 – 20 x 12.5 Post Filter for 20 x 25 and 20 x 12.5 F300E and F50F

Material Number	Approximate, Dimensions	Airflow Capacity (cfm)	Airflow Capacity (m^3/hr)	Fractional Efficiency	Static Pressure Drop (in. w.c.)	Replacement Filters
F300 Electronic Air Cleaner with Performance Enhancing Post Filter						
F300E1001/U	16 in. x 20 in. (406 mm x 508 mm)	Maximum – 1200 cfm	Maximum – 2040 m^3/hr	E1=81%, E2=93%, E3=99%	0.26 at 500 FPM	50000293-001
F300E1019/U	16 in. x 25 in. (406 mm x 635 mm)	Maximum – 1400 cfm	Maximum – 2380 m^3/hr	E1=81%, E2=93%, E3=99%	0.26 at 500 FPM	50000293-002
F300E1027/U	20 in. x 20 in. (508 mm x 508 mm)	Maximum – 1400 cfm	Maximum – 2380 m^3/hr	E1=81%, E2=93%, E3=99%	0.26 at 500 FPM	50000293-003
F300E1035/U	20 in. x 25 in. (508 mm x 635 mm)	Maximum – 2000 cfm	Maximum – 3400 m^3/hr	E1=81%, E2=93%, E3=99%	0.26 at 500 FPM	50000293-004

Electronic Air Cleaners

Dimensions in inches (millimeters)

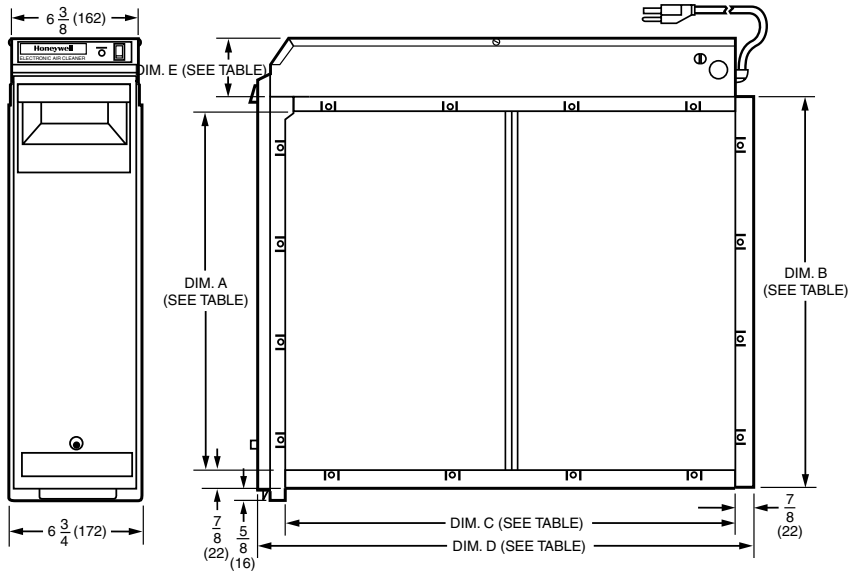

F300 SIZE		DIM. A		DIM. B		DIM. C		DIM. D		DIM. E	
IN.	MM	IN.	MM	IN.	MM	IN.	MM	IN.	MM	IN.	MM
16 X 25	406 X 635	14 7/16	367	16 3/16	411	23 1/4	591	25 1/2	648	2 3/4	70
16 X 20	406 X 508	14 7/16	367	16 3/16	411	18 1/4	457	20 1/2	521	2 3/4	70
20 X 25	508 X 635	18 7/16	468	20 3/16	513	23 1/4	591	25 1/2	648	2 3/4	70
20 X 20	508 X 508	18 7/16	468	20 3/16	513	18 1/4	457	20 1/2	521	2 3/4	70
20 X 12 1/2	508 X 318	18 7/16	468	20 3/16	513	10 7/8	276	13 1/8	333	3 5/8	92

M2872B

Pressure Drop versus Airflow

AIR CLEANER EFFICIENCY AND PRESSURE DROP AT VARIOUS AIRFLOW RATES.

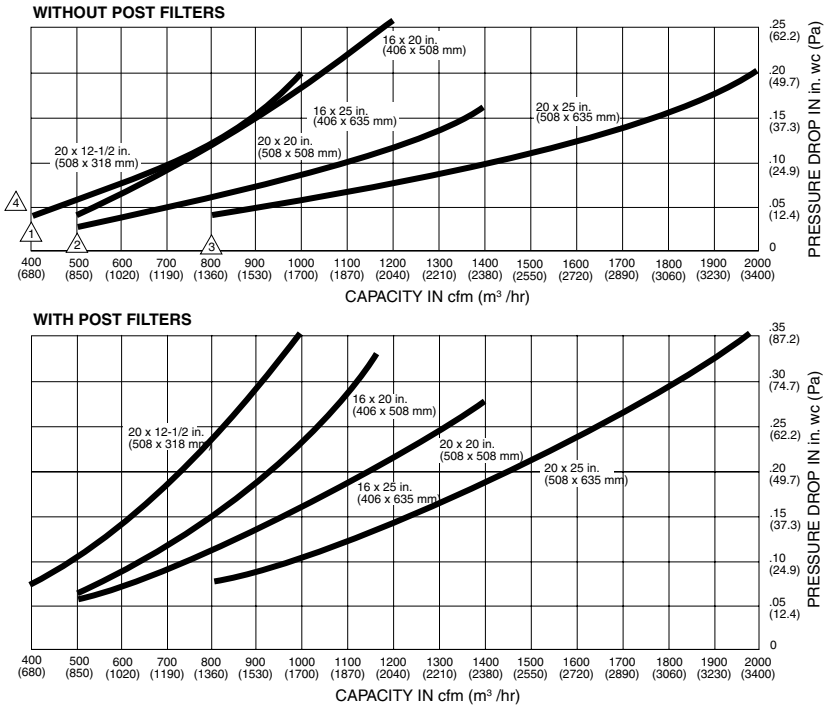

1. MINIMUM RECOMMENDED cfm FOR 20 x 12-1/2 in. (508 x 318 mm) MODEL.
2. MINIMUM RECOMMENDED cfm FOR 16 x 25 in. (406 x 635 mm), 20 x 20 in. (508 x 508 mm), 16 x 20 in. (406 x 508 mm) MODELS.
3. MINIMUM RECOMMENDED cfm FOR 20 x 25 in. (508 x 635 mm) MODEL.
4. SELECT SIZE THAT MOST CLOSELY FITS DIMENSIONS OF FURNACE/AIR HANDLER RETURN AIR OPENING

M13654

F300E Exploded View

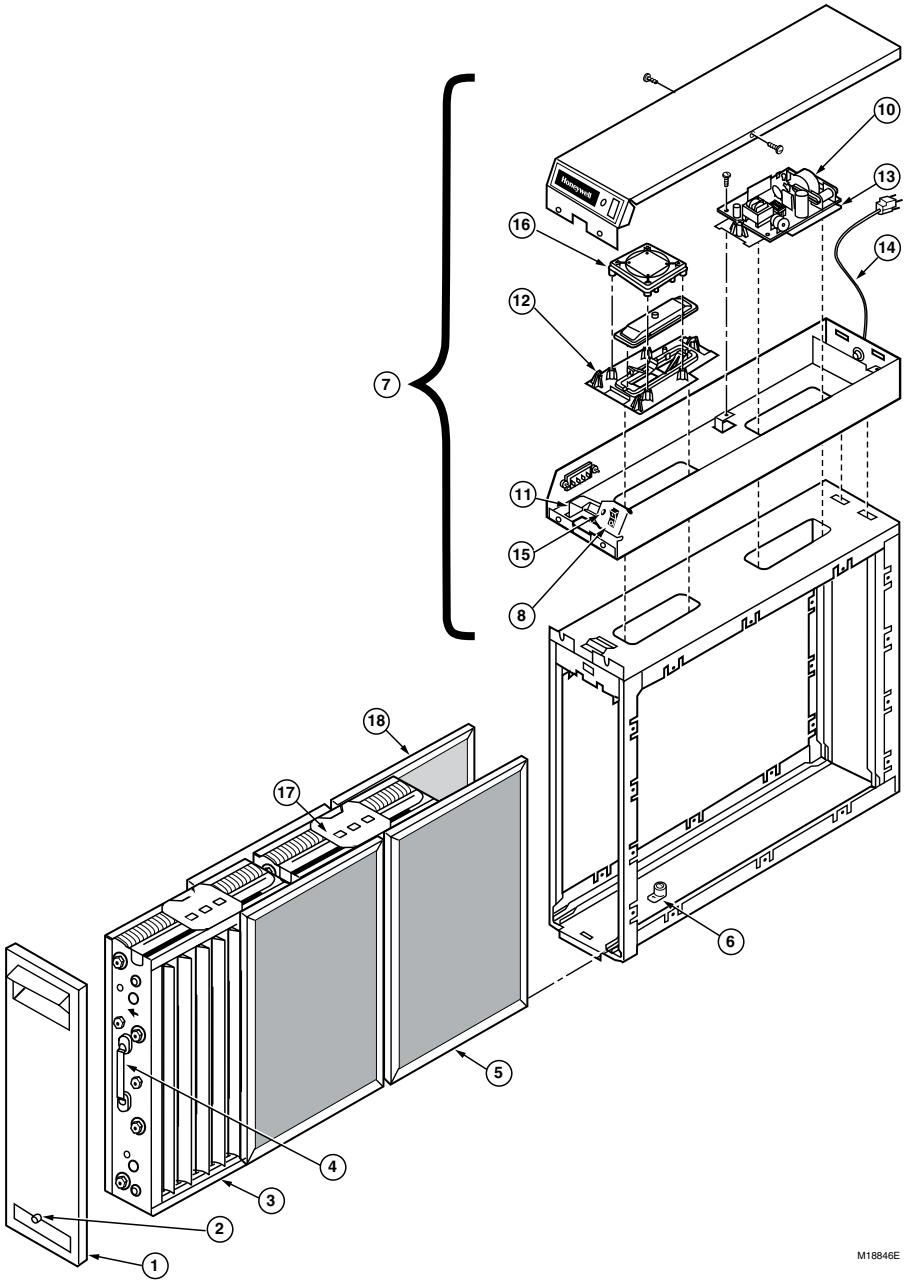

Electronic Air Cleaners Parts and Accessories

No.	Description	Nominal Return Air Opening				
		16 x 20 in. (406 x 508 mm)	16 x 25 in. (406 x 635 mm)	20 x 12-1/2 in. (508 x 318 mm)	20 x 20 in. (508 x 508 mm)	20 x 25 in. (508 x 635 mm)
1	F50 Access Door includes No. 2	N/A	N/A	N/A	N/A	N/A
1	F300 Access Door includes No. 2	N/A	N/A	N/A	N/A	N/A
2	Test Button Assembly	137980A/U (1)	137980A/U (1)	137980A/U (1)	137980A/U (1)	137980A/U (1)
3	Electronic Cell	FC37A1114/U (2)	FC37A1130/U (2)	FC37A1064/U (1)	FC37A1049/U (2)	FC37A1064/U (2)
4	Cell Handle	137266/U (2)	137266/U (2)	137266/U (1)	137266/U (2)	137266/U (2)
5	Prefilter (without spring clips)	209989/U (2)	203371/U (2)	203369/U (1)	203373/U (2)	203372/U (2)
7	F50 Power Box Assembly Includes No. 8-20, 120V, 60 Hz. Brown Cover.	PS1201B20/U	PS1201B25/U	N/A	PS1201B20/U	PS1201B25/U
7	F300 Power Box Assembly Includes No. 8-20, 120V, 60 Hz. White Cover.	PS1201B20/U	PS1201B25/U	N/A	PS1201B20/U	PS1201B25/U
8	Switch	203321/U (1)	203321/U (1)	203321/U (1)	203321/U (1)	203321/U (1)
10	F50 and F300 Power Supply, Series Two[b]. 120V, 60 Hz	N/A	N/A	N/A	N/A	N/A
11	Interlock Bracket and Switch	4074ETG/U (1)	4074ETG/U (1)	4074ETG/U (1)	4074ETG/U (1)	4074ETG/U (1)
12	Terminal Board Assembly Front	203329B/U (1)	203329B/U (1)	N/A	203329B/U (1)	203329B/U (1)
13	Terminal Board Assembly Rear	203329A/U (1)	203329A/U (1)	N/A	203329A/U (1)	203329A/U (1)
15	Neon Assembly	4074EYS/U (1)	4074EYS/U (1)	4074EYS/U (1)	4074EYS/U (1)	4074EYS/U (1)
16	Airflow Switch, pin connection	4074ETH/U (1)	4074ETH/U (1)	4074ETH/U (1)	4074ETH/U (1)	4074ETH/U (1)
16	Airflow Switch, plug connection	4074EZB/U (1)	4074EZB/U (1)	N/A	4074EZB/U (1)	4074EZB/U (1)
17	FC37A Bag Assembly for cell repair. Contains 2 Connector Clips, 1 Terminal Board and Instructions.	4074EHG/U	4074EHG/U	4074EHG/U	4074EHG/U	4074EHG/U
18	Post Filter (not included with F300A)	50000293-001/U	50000293-002/U	50000293-004/U	50000293-003/U	50000293-004/U

[a] Series One compatible with W8600E and W8600F.
[b] Series Two compatible with W8600F only.
[c] Use 203365A Conversion Kit for changing 120V, 60Hz model to 240V, 60 Hz.
[d] Change from brown cover to white cover as a running change. Use original cover for color match.
(#) = Quantity required per unit
N/A = Not available as merchandised part.

Parts and Accessories Not Illustrated

Description	Nominal Return Air Opening				
	16 x 20 in. (406 x 508 mm)	16 x 25 in. (406 x 635 mm)	20 x 12-1/2 in. (508 x 318 mm)	20 x 20 in. (508 x 508 mm)	20 x 25 in. (508 x 635 mm)
Ionizer Wires (multiples of 5)	136434BA/U	136434BA/U	136434AA/U	136434AA/U	136434AA/U
240V Conversion Kit	203365A/U	203365A/U	N/A	203365A/U	203365A/U

(#) = Quantity required per unit
N/A = Not available as merchandised part.

F52F Exploded View

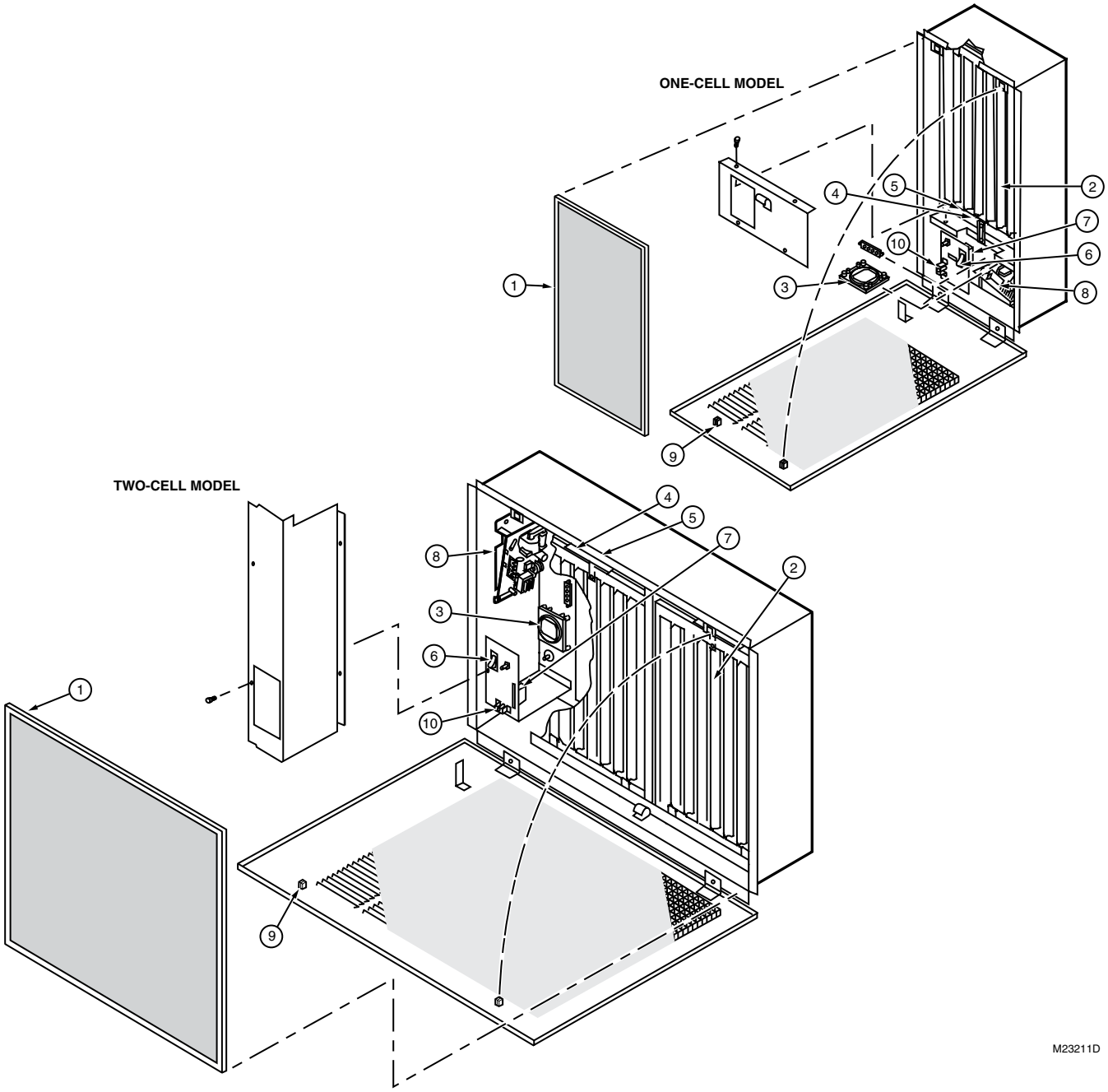

No.	Description	Part Number	
		120 Vac Model	
		F52F1048 1-Cell	F52F1055 2-Cell
1	Prefilter	208536/U	208537/U
2	Electronic Cell	FC37A1171/U	FC37A1171/U (2)
3	Air Flow Switch	4074ETH/U	4074ETH/U
4	Cell Contact Board	4074EHG/U	4074EHG/U (2)
5	Cabinet Contact Board	190912A/U	190912A/U (2)
6	On/Off Switch	203321/U	203321/U
7	Interlock Switch	208543/U	208543/U
8	Power Supply Series One[a]	208427J/U	208427AA/U
	Power Supply Series Two[b]	N/A	208416AA/U
9	Plastic Door Latch	207631/U (2)	207631/U (2)
10	Neon Lamp Assembly	4074ETE/U	4074ETE/U

[a] Series One compatible with W8600E only.
[b] Series Two compatible with W8600F only.

Parts and Accessories not Illustrated

Description	Part Number
	120 Vac Model
Cell Handle	137266/U
Ionizer Wires (Must be ordered in multiples of 5.)	136434AA/U (9/cell)

Residential Air Cleaners Replacement Power Supply

Electronic Air Cleaner				Replacement Power Supply		
Model	Voltage	Nominal Cell Size		Old Power Supply Cross Reference	Universal Power Supply (No Box)	Universal Power Supply (With Box)
		in.	mm			
F300A, F300E	120 Vac	20 x 12.5	508 x 318	208419A	PS1201A00	PS1201B12
		16 x 20	406 x 508	208418J		PS1201B20
		16 x 25	406 x 635	208417S		PS1201B25
		20 x 20	508 x 508	208418H		PS1201B20
		20 x 25	508 x 635	208417R		PS1201B25
F300B	240 Vac	20 x 12.5	508 x 318	208419E	PS2401A00	PS2401B12
F50A F50E	120 Vac	16 x 25	406 x 635	—	PS1201C01	—
		20 x 20	508 x 508	—		—
		20 x 25	508 x 635	—		—
		20 x 12.5	508 x 318	—	PS1201C02	—
	240 Vac	16 x 25	406 x 635	—	PS2401C00	—
		20 x 20	508 x 508	—		—
		20 x 25	508 x 635	—		—
		20 x 12.5	508 x 318	—		—
	220 Vac/50 Hz	16 x 25	406 x 635	—		—
F50F	120 Vac	20 x 12.5	508 x 318	208419E	PS1201A00	—
		16 x 20	406 x 508	208418E, 208418K		—
		16 x 25	406 x 635	208417B		—
		20 x 20	508 x 508	208418A, 208418L		—
		20 x 25	508 x 635	208417A		—
	240 Vac	20 x 12.5	508 x 318	208419C	PS2401A00	PS2401B12CE
		16 x 20	406 x 508	—		—
		16 x 25	406 x 635	208417P		—
		20 x 20	508 x 508	—		—
		20 x 25	508 x 635	208417N		PS2401B25
F52C (One-Cell)	120 Vac	20 x 12.5	508 x 318	—	PS1201C02	—
	220-240 Vac	20 x 12.5	508 x 318	—	PS2401C00	—
F52D (Two-Cell)	120 Vac	20 x 25	508 x 635	—	PS1201C02	—
	220-240 Vac	20 x 25	508 x 635	—	PS2401C00	—
F52F	120 Vac	12.5 x 20	317.5 x 508	208416AA	PS1201C02	PS1201C00
	120 Vac/60 Hz	20 x 25	508 x 635	208416AB	PS1201C02	PS1201C00
F54C	120 Vac	20 x 25	508 x 635	—	PS1201C02	—
	220-240 Vac	20 x 25	508 x 635	—	PS2401C00	—
F55A F55E	120 Vac	16 x 25	406 x 635	—	PS1201C02	—
		20 x 25	508 x 635	—		—
	240 Vac	16 x 25	406 x 635	—	PS2401C00	—
		20 x 25	508 x 635	—		—
F56A	120 Vac	16 x 12.5	406 x 318	—	PS1201C02	—
F57A (Two-Cell)	120 Vac	20 x 25	508 x 635	—	PS1201C02	—
F57B (One-Cell)	120 Vac	20 x 12.5	508 x 318	—	PS1201C02	—
F57B	220-240V, 50 Hz	20 x 12.5	508 x 318	—	PS2401C00	—
F58A, F58E	120 Vac	16 X 25	406 x 635	—	PS1201C02	—
F59A	120 Vac	16 x 12.5	406 x 318	—	PS1201C02	—
	220 Vac/50 Hz	16 x 12.5	406 x 318	—	PS2401C00	—
F70C	120 Vac	20 x 25	508 x 635	—	PS1201C00	—

F200 High Efficiency Media Air Cleaner

The F200 Media Air Cleaner captures a significant amount of the airborne particles in the air circulated through the unit. Recommended as a basic minimum air quality product. Includes; cabinet, access door and MERV 13 filter.

- Includes cabinet, access door and MERV 13 pleated media filter.
- High efficiency charged-media filter captures particles as small as 0.3 microns.
- Applicable to all gas, oil and electric forced air furnaces and to compressor cooling up to 5 tons.
- Mounts in the return air duct.
- Rugged zinc-coated, roll-formed cabinet resists corrosion and can support weight of residential furnace and evaporator coil.
- Requires no electrical connections.
- Mounts in any position.
- Requires no maintenance except periodic media filter replacement.
- Quick and easy media filter replacement.
- Later upgrade to higher performing media or electronic air cleaner is easy.

Applications: Duct mounted
Type of Air Cleaner: Media Air Cleaner
Efficiency Standard: Efficiency ratings are based on American Society of Heating, Refrigerating and Air-Conditioning Engineers Standard 52.2-1999. Efficiency ranges are defined for small particles, E1=0.3 to 1.0 microns; medium particles, E2=1.0 to 3.0 microns; and large particles, E3=3.0 to 10.0 microns.
Minimum Efficiency Reporting Value (Media Filters Only): MERV 13
Additional Features: Includes Media Air Cleaner and MERV 13 Filter
Approvals, Underwriters Laboratories Inc.: Filter Element: UL Listed, UL900, Class 2
Tradeline Value: Tradeline

Replacement Parts
FC100A1029/U – 16 x 25 Media Air Filter
FC100A1037/U – 20 x 25 Media Air Filter
FC100A1003/U – 16 x 20 Media Air Filter
FC100A1011/U – 20 x 20 Media Air Filter
FC200E1029/U – 16 x 25 Charged-Media Filter
FC200E1037/U – 20 x 25 Charged-Media Filter
FC200E1003/U – 16 x 20 Charged-Media Filter
FC200E1011/U – 20 x 20 Charged-Media Filter
POPUP1625/U – 16 x 25 POPUP Media Air Filter
POPUP2025/U – 20 x 25 POPUP Media Air Filter
POPUP1620/U – 16 x 20 POPUP Media Air Filter
POPUP2020/U – 20 x 20 POPUP Media Air Filter

Material Number	Approximate, Dimensions	Airflow Capacity (cfm)	Airflow Capacity (m^3/hr)	Fractional Efficiency	Static Pressure Drop (in. w.c.)	Replacement Filters
F200F2002/U	16 in. x 25 in. (406 mm x 635 mm)	Maximum – 1400 cfm	Maximum – 2380 m^3/hr	E1=63%, E2=91%, E3=99%	0.3 at 500 FPM	FC100A1029, FC200E1029, POPUP1625
F200F2010/U	20 in. x 25 in. (508 mm x 635 mm)	Maximum – 2000 cfm	Maximum – 3400 m^3/hr	E1=63%, E2=91%, E3=99%	0.3 at 500 FPM	FC100A1037, FC200E1037, POPUP2025
F200F2028/U	16 in. x 20 in. (406 mm x 508 mm)	Maximum – 1200 cfm	Maximum – 2040 m^3/hr	E1=63%, E2=91%, E3=99%	0.3 at 500 FPM	FC100A1003, FC200E1003, POPUP1620
F200F2036/U	20 in. x 20 in. (508 mm x 508 mm)	Maximum – 1400 cfm	Maximum – 2380 m^3/hr	E1=63%, E2=91%, E3=99%	0.3 at 500 FPM	FC100A1011, FC200E1011, POPUP2020

Pressure Drop of FC200 Filter

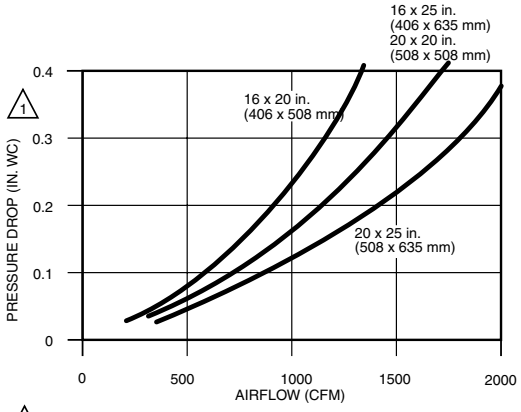

1 WHEN FIRST INSTALLED. PRESSURE DROP INCREASES AS FILTER BECOMES LOADED. REPLACE FILTER WHEN PRESSURE DROP REACHES 0.5 IN. WC. (0.1 kPa).

M13662

Media Air Cleaners

Dimensions in inches (millimeters)

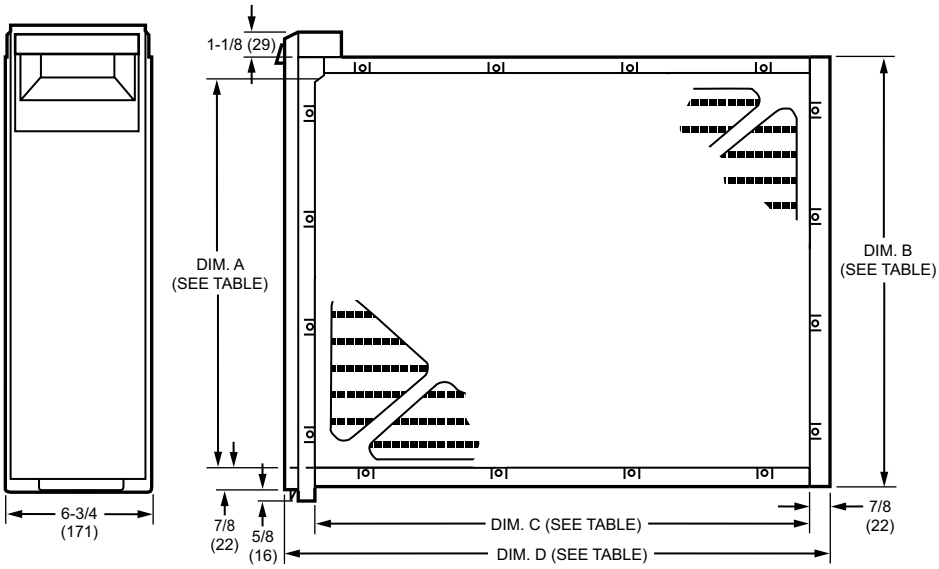

F100 SIZE		DIM. A		DIM. B		DIM. C		DIM. D	
IN.	MM	IN.	MM	IN.	MM	IN.	MM	IN.	MM
16 X 25	406 X 635	14 7/16	367	16 3/16	411	23 1/4	591	25 1/2	648
16 X 20	406 X 508	14 7/16	367	16 3/16	411	18 1/4	457	20 1/2	521
20 X 25	508 X 635	18 7/16	468	20 3/16	513	23 1/4	591	25 1/2	648
20 X 20	508 X 508	18 7/16	468	20 3/16	513	18 1/4	457	20 1/2	521
25 X 20	635 X 508	23 5/16	592	25 1/8	638	18 3/8	467	20 5/8	524
25 X 22	635 X 559	23 5/16	592	25 1/8	638	20 1/4	514	22 1/2	572

M14710E

F100 Media Air Cleaner with MERV 11 Filter

The F100 Media Air Cleaner captures a significant amount of the airborne particles in the air circulated through the unit. Recommended as a basic minimum air quality product. Includes; cabinet, access door and MERV 11 filter.

- High efficiency media filter captures particles as small as 0.3 microns.
- Applicable to all gas, oil and electric forced air furnaces and to compressor cooling up to 5 tons.
- Mounts in the return air duct.
- Rugged zinc-coated, roll-formed cabinet resists corrosion and can support weight of residential furnace and evaporator coil.
- Requires no electrical connections.
- Mounts in any position.
- Requires no maintenance except periodic media filter replacement.
- Quick and easy media filter replacement.
- Later upgrade to higher performing media or electronic air cleaner is easy.

Applications: Duct mounted
Type of Air Cleaner: Media Air Cleaner
Efficiency Standard: Efficiency ranges are defined for small particles, E1=0.3 to 1.0 microns; medium particles, E2=1.0 to 3.0 microns; and large particles, E3=3.0 to 10.0 microns. Efficiency ratings are based on American Society of Heating, Refrigerating and Air-Conditioning Engineers Standard 52.2-1999
Minimum Efficiency Reporting Value (Media Filters Only): MERV 11
Additional Features: Includes Media Air Cleaner and MERV 11 Filter
Approvals, Underwriters Laboratories Inc.: Filter Element: UL Listed, UL900, Class 2
Tradeline Value: Tradeline

Replacement Parts:
FC100A1003/U – F16 x 20 Media Air Filter - MERV 11
FC100A1011/U – 20 x 20 Media Air Filter - MERV 11
FC100A1029/U – 16 x 25 Media Air Filter - MERV 11
FC100A1037/U – 20 x 25 Media Air Filter - MERV 11
FC100A1045/U – 21.5 x 27.5 Media Air Filter - MERV 11
FC100A1052/U – 20 x 12.5 Media Air Filter - MERV 11
FC200E1003/U – 16 x 20 Charged-Media Filer - MERV 13
FC200E1011/U – 20 x 20 Charged-Media Filter - MERV 13
FC200E1029/U – 16 x 25 Charged-Media Filer - MERV 13
FC200E1037/U – 20 x 25 Charged-Media Filter - MERV 13

Material Number	Approximate, Dimensions	Airflow Capacity (cfm)	Airflow Capacity (m^3/hr)	Fractional Efficiency	Static Pressure Drop (in. w.c.)	Replacement Filters
F100F2002/U	16 in. x 25 in. (406 mm x 635 mm)	Maximum – 1400 cfm	Maximum – 2380 m^3/hr	E1=25%, E2=62%, E3=85%	0.23 at 500 FPM	FC100A1029, FC200E1029, POPUP1625
F100F2010/U	20 in. x 25 in. (508 mm x 635 mm)	Maximum – 2000 cfm	Maximum – 3400 m^3/hr	E1=25%, E2=62%, E3=85%	0.23 at 500 FPM	FC100A1037, FC200E1037, POPUP2025
F100F2028/U	16 in. x 20 in. (406 mm x 508 mm)	Maximum – 1200 cfm	Maximum – 2040 m^3/hr	E1=25%, E2=62%, E3=85%	0.23 at 500 FPM	FC100A1003, FC200E1003, POPUP1620
F100F2036/U	20 in. x 20 in. (508 mm x 508 mm)	Maximum – 1400 cfm	Maximum – 2380 m^3/hr	E1=25%, E2=62%, E3=85%	0.23 at 500 FPM	FC100A1011, FC200E1011, POPUP2020
F100F2044/U	25 in. x 20 in. (635 mm x 508 mm)	Maximum – 2000 cfm	Maximum – 3400 m^3/hr	E1=25%, E2=62%, E3=85%	0.23 at 500 FPM	FC100A1037, FC200E1037, FC100C1017
F100F2051/U	25 in. x 22 in. (635 mm x 559 mm)	Maximum – 2000 cfm	Maximum – 3400 m^3/hr	E1=25%, E2=62%, E3=85%	0.23 at 500 FPM	FC100A1037, FC200E1037, FC100C1017

Pressure Drop of FC100 Filter

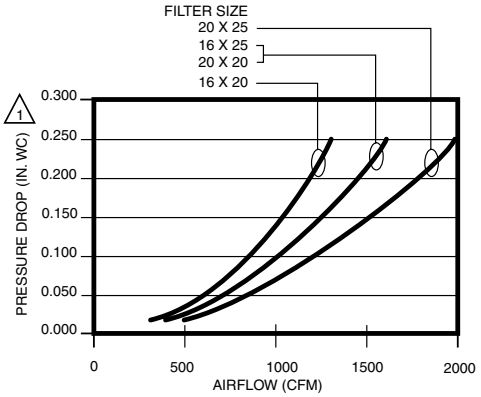

1 WHEN FIRST INSTALLED. PRESSURE DROP INCREASES AS FILTER BECOMES LOADED. REPLACE FILTER WHEN PRESSURE DROP REACHES 0.5 IN. WC. (0.1 kPa).

M14709A

Media Air Cleaners

Dimensions in inches (millimeters)

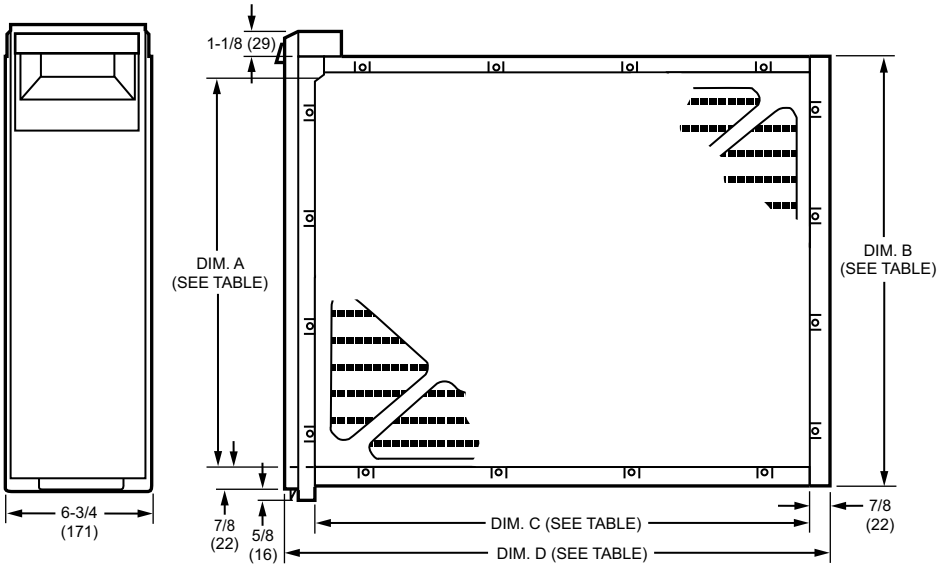

F100 SIZE		DIM. A		DIM. B		DIM. C		DIM. D	
IN.	MM	IN.	MM	IN.	MM	IN.	MM	IN.	MM
16 X 25	406 X 635	14 7/16	367	16 3/16	411	23 1/4	591	25 1/2	648
16 X 20	406 X 508	14 7/16	367	16 3/16	411	18 1/4	457	20 1/2	521
20 X 25	508 X 635	18 7/16	468	20 3/16	513	23 1/4	591	25 1/2	648
20 X 20	508 X 508	18 7/16	468	20 3/16	513	18 1/4	457	20 1/2	521
25 X 20	635 X 508	23 5/16	592	25 1/8	638	18 3/8	467	20 5/8	524
25 X 22	635 X 559	23 5/16	592	25 1/8	638	20 1/4	514	22 1/2	572

M14710E

Residential Air Cleaner Replacement Media Filter

Replacement filter for Honeywell F25, F27, F35, F100, F150, F200 Media Air Cleaners.

- High filtration efficiency
- Low pressure drop
- Easy to install
- Long life
- UL listed

Applications: Replacement Filter
Type of Air Cleaner: Media Air Cleaner
Efficiency Standard: Efficiency ratings are based on American Society of Heating, Refrigerating and Air-Conditioning Engineers Standard 52.2-1999.

Material Number	Minimum Efficiency Reporting Value (Media Filters Only)	Approximate, Dimensions	Fractional Efficiency	Static Pressure Drop (in. w.c.)	Used With
FC100A1003/U	MERV 10	16 in. x 20 in. (406 mm x 508 mm)	E1=25%, E2=62%, E3=85%	0.23 at 500 FPM	Honeywell 16X20 F100 and F200 Media Air Cleaners
FC100A1011/U	MERV 10	20 in. x 20 in. (508 mm x 508 mm)	E1=25%, E2=62%, E3=85%	0.23 at 500 FPM	Honeywell 20X20 F100 and F200 Media Air Cleaners
FC100A1029/U	MERV 10	16 in. x 25 in. (406 mm x 635 mm)	E1=25%, E2=62%, E3=85%	0.23 at 500 FPM	Honeywell 16X25 F100 and F200 Media Air Cleaners
FC100A1037/U	MERV 10	20 in. x 25 in. (508 mm x 635 mm)	E1=25%, E2=62%, E3=85%	0.23 at 500 FPM	Honeywell 20X25, 25X20, 25X22 F100 and F200 Media Air Cleaners, SpaceGard 2200
FC100A1045/U	MERV 10	21 1/2 in. x 27 1/2 in. (546 mm x 699 mm)	E1=25%, E2=62%, E3=85%	0.23 at 500 FPM	F27F1057
FC100A1052/U	MERV 10	20 in. x 12 1/2 in. (508 mm x 318 mm)	E1=25%, E2=62%, E3=85%	0.23 at 500 FPM	F27F1032
FC100A1060/U	MERV 10	16 in. x 28 in. (406 mm x 711 mm)	E1=25%, E2=62%, E3=85%	0.23 at 500 FPM	SpaceGard 2400
FC200E1003/U	MERV 13	16 in. x 20 in. (406 mm x 508 mm)	E1=63%, E2=90%, E3=97%	0.28 at 500 FPM	Honeywell 16X20 F100 and F200 Media Air Cleaners
FC200E1011/U	MERV 13	20 in. x 20 in. (508 mm x 508 mm)	E1=63%, E2=90%, E3=97%	0.28 at 500 FPM	Honeywell 20X20 F100 and F200 Media Air Cleaners
FC200E1029/U	MERV 13	16 in. x 25 in. (406 mm x 635 mm)	E1=63%, E2=90%, E3=97%	0.28 at 500 FPM	Honeywell 16X25 F100 and F200 Media Air Cleaners
FC200E1037/U	MERV 13	20 in. x 25 in. (508 mm x 635 mm)	E1=63%, E2=90%, E3=97%	0.28 at 500 FPM	Honeywell 20X25, 25X20, 25X22 F100 and F200 Media Air Cleaners, SpaceGard 2200
FC2200A1009/U	MERV 10	20 1/4 in. x 24 1/4 in. x 5 7/8 in. (514 mm x 616 mm x 149 mm)	E1=19%, E2=54%, E3=86%	0.21 at 500 FPM	SpaceGard 2200
FC2400A1005/U	MERV 10	16 in. x 27 1/8 in. x 5 7/8 in. (406 mm x 689 mm x 149 mm)	E1=19%, E2=54%, E3=86%	0.21 at 500 FPM	SpaceGard 2400

Residential Air Cleaner POPUP Replacement Media Filter

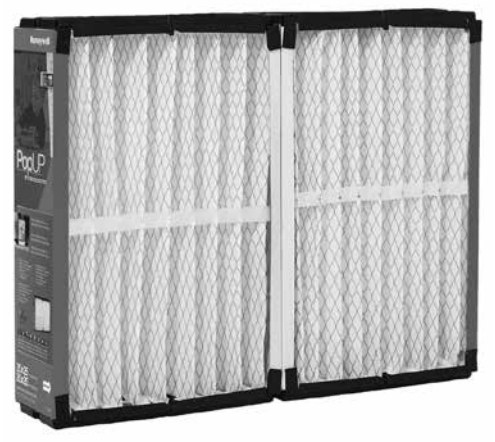

Honeywell PopUP filters store flat and pop into shape for installation.

- Save space on the truck.
- Less damage during storage.
- Save time on assembly.
- So easy you can sell over-the-counter to homeowners without worry of mistakes.
- Compact shape makes PopUP easy to ship.
- No combs, pleat spacers or end caps.

Applications: Replacement Filter
Type of Air Cleaner: Media Air Cleaner

Efficiency Standard: Efficiency ratings are based on American Society of Heating, Refrigerating and Air-Conditioning Engineers Standard 52.2-1999. Efficiency ranges are defined for small particles, E1=0.3 to 1.0 microns; medium particles, E2=1.0 to 3.0 microns; and large particles, E3=3.0 to 10.0 microns.

Material Number	Minimum Efficiency Reporting Value (Media Filters Only)	Approximate, Dimensions	Used With
POPUP1620/U	MERV 11	16 in. x 20 in. (406 mm x 508 mm)	Honeywell 16X20 F100 and F200 Media Air Cleaners
POPUP1625/U	MERV 11	16 in. x 25 in. (406 mm x 635 mm)	Honeywell 16X25 F100 and F200 Media Air Cleaners
POPUP2020/U	MERV 11	20 in. x 20 in. (508 mm x 508 mm)	Honeywell 20X20 F100 and F200 Media Air Cleaners
POPUP2025/U	MERV 11	20 in. x 25 in. (508 mm x 635 mm)	Honeywell 20X25 F100 and F200 Media Air Cleaners. Does not work with 25X20 or 25X22 Media Air Cleaners.
POPUP2200/U	MERV 11	20 1/4 in. x 24 1/4 in. x 5 7/8 in. (514 mm x 616 mm x 149 mm)	SpaceGard 2200, 2120, 2250, Lennox PMAC20, GeneralAire AC-1
POPUP2400/U	MERV 11	16 in. x 27 1/8 in. x 5 7/8 in. (406 mm x 689 mm x 149 mm)	SpaceGard 2400, 2140, Lennox PMAC12

Return Grille Media Air Filter

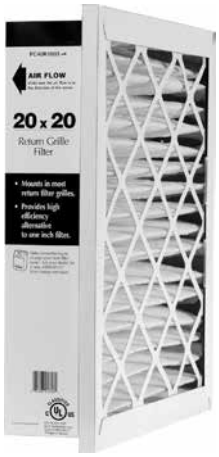

The Return Grille Filter provides a high efficiency, long life alternative to a 1" filter. Our patented design, unique to the industry, captures a significant amount of the airborne particles, in the air that circulates through the filter.

- Mounts in most return filter grilles.
- Pleated for greater media capacity.
- Low pressure drop provides a comfortable air flow.
- Maintains equipment efficiency longer than standard filters.
- FC40 is MERV 10.
- FC20 is MERV 8.

Applications: Return Grill
Type of Air Cleaner: Media Air Cleaner
Efficiency Standard: Efficiency ratings are based on American Society of Heating, Refrigerating and Air-Conditioning Engineers Standard 52.2-1999. Efficiency ranges are defined for small particles, E1=0.3 to 1.0 microns; medium particles, E2=1.0 to 3.0 microns; and large particles, E3=3.0 to 10.0 microns.

Fractional Efficiency: E1=31%, E2=61%, E3=86%
Static Pressure Drop (in. w.c.): 0.12 at 300FPM

Material Number	Minimum Efficiency Reporting Value (Media Filters Only)	Approximate, Dimensions	Airflow Capacity (cfm)	Airflow Capacity (m^3/hr)
FC40R1003/U	MERV 10	20 in. x 20 in. (508 mm x 508 mm)	Maximum – 1150 cfm	Maximum – 1950 m^3/hr
FC40R1011/U	MERV 10	20 in. x 25 in. (508 mm x 635 mm)	Maximum – 1450 cfm	Maximum – 2460 m^3/hr
FC40R1029/U	MERV 10	20 in. x 30 in. (508 mm x 762 mm)	Maximum – 1800 cfm	Maximum – 3060 m^3/hr
FC40R1045/U	MERV 10	14 in. x 25 in. (356 mm x 635 mm)	Maximum – 1000 cfm	Maximum – 1700 m^3/hr
FC40R1052/U	MERV 10	16 in. x 20 in. (406 mm x 508 mm)	Maximum – 900 cfm	Maximum – 1530 m^3/hr
FC40R1060/U	MERV 10	16 in. x 25 in. (406 mm x 635 mm)	Maximum – 1150 cfm	Maximum – 1950 m^3/hr
FC40R1078/U	MERV 10	24 in. x 24 in. (610 mm x 610 mm)	Maximum – 1700 cfm	Maximum – 2890 m^3/hr
FC40R1094/U	MERV 10	12 in. x 12 in. (305 mm x 305 mm)	Maximum – 350 cfm	Maximum – 590 m^3/hr
FC40R1102/U	MERV 10	14 in. x 14 in. (356 mm x 356 mm)	Maximum – 500 cfm	Maximum – 850 m^3/hr
FC40R1110/U	MERV 10	14 in. x 20 in. (356 mm x 508 mm)	Maximum – 750 cfm	Maximum – 1270 m^3/hr
FC40R1128/U	MERV 10	14 in. x 24 in. (356 mm x 610 mm)	Maximum – 950 cfm	Maximum – 1610 m^3/hr
FC40R1136/U	MERV 10	18 in. x 24 in. (457 mm x 610 mm)	Maximum – 1250 cfm	Maximum – 2120 m^3/hr
FC40R1144/U	MERV 10	20 in. x 24 in. (508 mm x 610 mm)	Maximum – 1400 cfm	Maximum – 2380 m^3/hr
FC40R1169/U	MERV 10	14 in. x 30 in. (356 mm x 762 mm)	Maximum – 1200 cfm	Maximum – 2040 m^3/hr
FC40R1177/U	MERV 10	24 in. x 30 in. (610 mm x 762 mm)	Maximum – 2050 cfm	Maximum – 3480 m^3/hr
FC40R1185/U	MERV 10	18 in. x 18 in. (457 mm x 457 mm)	Maximum – 950 cfm	Maximum – 850 m^3/hr
FC40R1830/U	MERV 10	18 in. x 30 in. (457 mm x 762 mm)	Maximum – 1550 cfm	Maximum – 2610 m^3/hr

Dimensions in inches (millimeters)

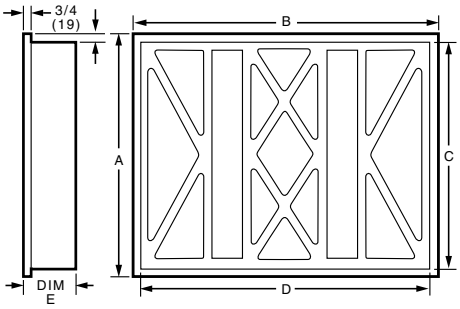

DIMENSIONS IN. (MM)

Product Numbers	Size	A	B	C	D	E
FC40R1003	20 X 20 (508 x 508)	19-3/4 (502)	19-3/4 (502)	18-1/2 (470)	18-1/2 (470)	4-3/8 (111)
FC40R1011	20 X 25 (508 x 635)	19-3/4 (502)	24-3/4 (629)	18-1/2 (470)	23-1/2 (597)	4-3/8 (111)
FC40R1029	20 X 30 (508 x 762)	19-3/4 (502)	29-3/4 (756)	18-1/2 (470)	28-1/2 (724)	4-3/8 (111)
FC40R1037	12 X 24 (305 X 610)	11-3/4 (298)	23-3/4 (603)	10-1/2 (266)	22-1/2 (571)	4-3/8 (111)
FC40R1045	14 X 25 (356 X 635)	13-3/4 (349)	24-3/4 (629)	12-1/2 (317)	23-1/2 (596)	4-3/8 (111)
FC40R1052	16 X 20 (406 X 508)	15-3/4 (400)	19-3/4 (502)	14-1/2 (368)	18-1/2 (470)	4-3/8 (111)
FC40R1060	16 X 25 (406 X 635)	15-3/4 (400)	24-3/4 (629)	14-1/2 (368)	23-1/2 (596)	4-3/8 (111)
FC40R1078	24 X 24 (610 X 610)	23-3/4 (603)	23-3/4 (603)	22-1/2 (571)	22-1/2 (571)	4-3/8 (111)
FC40R1094	12 X 12 (305 X 305)	11-3/4 (298)	11-3/4 (298)	10-1/2 (266)	10-1/2 (266)	4-3/8 (111)
FC40R1102	14 X 14 (356 X 356)	13-3/4 (349)	13-3/4 (349)	12-1/2 (317)	12-1/2 (317)	4-3/8 (111)
FC40R1110	14 X 20 (356 X 508)	13-3/4 (349)	19-3/4 (502)	10-1/2 (266)	18-1/2 (470)	4-3/8 (111)
FC40R1128	14 X 24 (356 x 610)	13-3/4 (349)	23-3/4 (603)	12-1/2 (317)	22-1/2 (571)	4-3/8 (111)
FC40R1136	18 X 24 (457 x 610)	17-3/4 (451)	23-3/4 (603)	16-1/2 (419)	22-1/2 (571)	4-3/8 (111)
FC40R1144	20 X 24 (508 x 610)	19-3/4 (502)	23-3/4 (603)	18-1/2 (470)	22-1/2 (571)	4-3/8 (111)
FC40R1169	14 X 30 (356 X 762)	13-3/4 (349)	29-3/4 (756)	12-1/2 (317)	28-1/2 (724)	4-3/8 (111)
FC40R1177	24 X 30 (610 X 762)	23-3/4 (603)	29-3/4 (756)	22-1/2 (571)	28-1/2 (724)	4-3/8 (111)
FC40R1185	18 X 18 (457 X 457)	17-3/4 (451)	17-3/4 (451)	16-1/2 (419)	16-1/2 (419)	4-3/8 (111)
FC40R1830	18 X 30 (457 X 762)	17-3/4 (451)	29-3/4 (756)	16-1/2 (419)	28-1/2 (724)	4-3/8 (111)

M18953D

HEPA Replacement Media

HEPA stands for high-efficiency particulate arresting. Honeywell HEPA air cleaners offer powerful filtration: They capture 99.97% of particles that are 0.3 microns in size from the air that passes through the filter.

Applications: Replacement Filter
Type of Air Cleaner: HEPA Air Cleaner

Material Number	Description	Used With
32006026-001/U	Carbon Filter for Whole House HEPA Air Cleaner	F500
32006027-001/U	2 inch Prefilter for Whole House HEPA Air Cleaner	F500
32006028-001/U	HEPA Filter for Whole House HEPA Air Cleaner	F500

Replacement Filter for Perfect Fit

The replacement filter is a high-efficiency long-life filter for Perfect Fit media air cleaners. It captures a significant amount of airborne particles in the air that circulates through the filter.

- Higher efficiency and lower pressure drop than OEM filter.
- Captures particles as small as 0.3 microns.
- Pleated filter for greater media capacity.
- Low pressure drop reduces strain on equipment, provides a comfortable air flow, and helps maintain equipment efficiency.
- Easy installation. Angled edge fits neatly into offset side of air cleaner frame.

Applications: Replacement Filter
Type of Air Cleaner: Media Air Cleaner
Efficiency Standard: Efficiency ratings are based on American Society of Heating, Refrigerating and Air-Conditioning Engineers Standard 52.2-1999. Efficiency ranges are defined for small particles, E1=0.3 to 1.0 microns; medium particles, E2=1.0 to 3.0 microns; and large particles, E3=3.0 to 10.0 microns.
Fractional Efficiency: E1=22%, E2=61%, E3=87%
Static Pressure Drop (in. w.c.): 0.17 at 500 FPM
Approvals, Underwriters Laboratories Inc.: Filter Element: UL Listed, UL900, Class 2

Material Number	Minimum Efficiency Reporting Value (Media Filters Only):	Approximate, Dimensions	Used With
TRN1427T1/U	MERV 10	14 1/2 in. X 27 in. X 5 in. (360 mm x 670 mm x 120 mm)	Trane Perfect Fit Media Air Cleaners
TRN1727T1/U	MERV 10	17 1/2 in. X 27 in. X 5 in. (440 mm x 670 mm x 120 mm)	Trane Perfect Fit Media Air Cleaners
TRN2121T1/U	MERV 10	21 1/2 in. x 21 in. x 5 in. (540 mm x 510 mm x 120 mm)	Trane Perfect Fit Media Air Cleaners
TRN2127T1/U	MERV 10	21 in. x 27 in. x 5 in. (530 mm x 670 mm x 120 mm)	Trane Perfect Fit Media Air Cleaners
TRN2321T1/U	MERV 10	23 1/2 in. x 21 in. x 5 in. (590 mm x 51 mm x 120 mm)	Trane Perfect Fit Media Air Cleaners
TRN2427T1/U	MERV 10	24 in. x 27 in. x 5 in. (620 mm x 670 mm x 120 mm)	Trane Perfect Fit Media Air Cleaners
TRN2621T1/U	MERV 10	26 in. X 21 in. X 5 in. (660 mm x 510 mm 120 mm)	Trane Perfect Fit Media Air Cleaners

Dimensions in inches (millimeters)

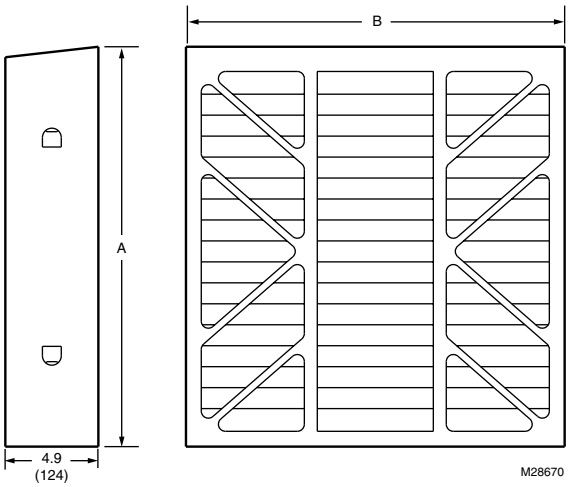

Residential Air Cleaner Parts and Accessories

Material Number	Description	Used With	
136434AA/U	20 inch Ionizer wire		
136434BA/U	16 inch Ionizer wire		
137266/U	F50F and F58F Cell Handle		
137980A/U	Test Button Assembly for F50A, F50E, F50F, or F58C,F	F50	
138889A/U	Contact Board, F50E, F59A	F50, F59	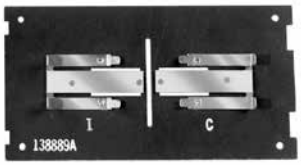
190912A/U	Contact Board, F52C,D,E,F	F52	
195911/U	Carbon filter		
203321/U	ON/OFF Switch for F50F, F52F, or F58F	F52	
203329A/U	F50F Terminal Board Assembly, Rear	F50	
203329B/U	F50F Terminal Board Assembly, Front, 25 in Box	F50	
203368/U	Prefilter for 16X25 F50F, F300”	F300, F50	
203369/U	Prefilter for 20X25, 20X12.5 F50F, F300”	F300, F50	
203370/U	Prefilter for 20X20 F50F, F300”	F300, F50	
203371/U	Prefilter for 16X25 F50A,B,E,F, F300”	F300, F50	
203372/U	Prefilter for 20X25, 20X12.5 F50A,B,E,F, F300”	F300, F50	
203373/U	Prefilter for 20X20 F50A,B,E,F, F300”	F300, F50	
203638/U	Carbon Filter, F59A, Series 1,2,3”	F59	
207631/U	DOOR LATCH, F52F	F52	
208536/U	Prefilter for F52F 1-Cell	F52	
208537/U	Prefilter for F52F 2-Cell	F52	
208543/U	INTERLOCK SWITCH, F52F	F52	
209989/U	Prefilter for 16X20 F50F, F300”	F300, F50	
50053268-018/U	TrueCLEAN™ Replacement Air Flow Sensor	FH8000A	
50067967-003/U	25 in. Replacement door for F100 (gray)	F100F2044, F100F2051	
FC37A1049/U	Electronic Air Cleaner Cell, 9.8 x 20”		
FC37A1064/U	Electronic Air Cleaner Cell, 12.4 x 20”		
FC37A1114/U	Electronic Air Cleaner Cell, 9.8 x 16”		
FC37A1130/U	Electronic Air Cleaner Cell, 12.4 x 16”		
FC37A1171/U	Electronic Air Cleaner Cell, 12.4 x 20”	F52	
FC37B1030/U	Electronic Air Cleaner Cell, 12.4 x 20”		

Air Cleaner Parts and Accessories

EAC Media Post Filter

Applications: Replacement Filter
Type of Air Cleaner: Electronic Air Cleaner

Material Number	Description	Used With
50000293-001/U	High air flow media post-filter for EAC, 16x10 - 2 filters per package	F300, F50F
50000293-002/U	High air flow media post-filter for EAC, 16x12.5 - 2 filters per package	F300, F50F
50000293-003/U	High air flow media post-filter for EAC, 20x10 - 2 filters per package	F300, F50F
50000293-004/U	High air flow media post-filter for EAC, 20x12.5 - 2 filters per package	F300, F50F

Residential Air Cleaners Replacement Power Supply

Material Number	Electrical Ratings	Description	Used With
203365A/U		Conversion Kit for changing 120V Power Supply to 240V.	
PS1201A00/U	120 Vac	Replacement power supply. 120 Vac. Selectable jumper for 20x25, 16x25, 20x20, 16x20 and 12.5x20 electronic air cleaners.	F300|F50
PS1201B20/U	120 Vac	Replacement power box. 120 Vac. 20 inch box for 16x20 and 20x20 electronic air cleaners.	F50|F300
PS1201B25/U	120 Vac	Replacement power box. 120 Vac. 25 inch box for 16x25 and 20x25 electronic air cleaners.	F50|F300
PS1201C00/U	120 Vac	Replacement power supply on chassis. 120 Vac. Selectable jumper for 20x25 and 12.5x20 return grill electronic air cleaners.	F52
PS1201C01/U	120 Vac	Replacement power supply on chassis. 120 Vac. Selectable jumper.	
PS1201C02/U	120 Vac	Replacement power supply on chassis. 120 Vac. Selectable jumper.	
PS1202A00/U	120 Vac	Replacement power supply. 120 Vac. Includes driver board for LED indicators. Selectable jumper for 20x25, 16x25, 20x20, 16x20 and 12.5x20 electronic air cleaners.	F50|F300
PS1202B12/U	120 Vac	Replacement power box. 120 Vac. Includes driver board for LED indicators. 12 inch box for 12.5x20 electronic air cleaner.	F50|F300
PS1202B12J/U	120 Vac	Replacement power junction box. 120 Vac. Includes driver board for LED indicators. 12 inch box for 12.5x20 electronic air cleaner.	F50
PS1202B20/U	120 Vac	Replacement power box. 120 Vac. Includes driver board for LED indicators. 20 inch box for 16x20 and 20x20 electronic air cleaners.	F300|F50
PS1202B25/U	120 Vac	Replacement power box. 120 Vac. Includes driver board for LED indicators. 25 inch box for 16x25 and 20x25 electronic air cleaners.	F50|F300
PS1202C00/U	120 Vac	Replacement power supply on chassis. 120 Vac. Includes driver board for LED indicators. Selectable jumper for 20x25 and 12.5x20 return grill electronic air cleaners.	F52
PS1202C03/U	120 Vac	Replacement power supply on chassis. 120 Vac. Includes driver board for LED indicators.	
PS2401A00/U	230 Vac	Replacement power supply. 230 Vac. Selectable jumper.	F300|F50
PS2401B12/U	230 Vac	Replacement power box. 230 Vac. 12 inch box for 12.5x20 electronic air cleaner.	F50
PS2401B25/U	230 Vac	Replacement power box. 230 Vac. 25 inch box. Selectable jumper.	F50
PS2401C00/U	230 Vac	Replacement power supply on chassis. 230 Vac. Selectable jumper.	
PS2402B12/U	230 Vac	Replacement power box. 230 Vac. Includes driver board for LED indicators. 12 inch box for 12.5x20 electronic air cleaner.	F50
PS2402B12J/U	230 Vac	Replacement power junction box. 230 Vac. Includes driver board for LED indicators. 12 inch box for 12.5x20 electronic air cleaner.	F50

TrueDRY™ Dehumidification Systems

The Honeywell TrueDRY DR120 ensures the home is maintained at proper humidity levels through its high performance and efficiency in the industry.

- Removes up to 65 pints (30.8 l) of water per day from the indoor air.
- Built-in humidity control requires no additional wiring to an external control. Just plug in and go! Choice of external control options also available for centrally ducted control.
- Energy Star 3.0 rated.

Type: Dehumidifier
Voltage: 120V
Includes: Four leveling feet with rubber isolation pads.

Material Number	Description	Capacity (gal. per day)	Capacity (pints per day)	Capacity (liter per day)	Electrical Ratings	Color	Approximate, Dimensions	Plenum Opening	Weight (lb)
DR65A2000/U	TrueDRY 65-pint dehumidifier with on-board control.	8 3/25 gal per day	65 pints per day	30 L per day	5.2 A	Gray	31 in. L x 15 in. W x 16 in. H	Diameter – 8 in. collars (Diameter – 203 mm collar)	55 lb
DR90A2000/U	TrueDRY 90-pint dehumidifier.	11 1/4 gal per day	90 pints per day	45 L per day	6.3 A	Gray	40 in. L x 18-1/2 in. W x 21-1/2 in. H	Diameter – 10 in. collars; 6 in. ventilation collar (Diameter – 254 mm collars; 152 mm vent collar)	82 lb
DR120A2000/U	TrueDRY 120-pint dehumidifier.	15 gal per day	120 pints per day	57 L per day	8.1 A	Gray	40 in. L x 18-1/2 in. W x 23-1/2 in. H	Diameter – 10 in. collars; 6 in. ventilation collar (Diameter – 254 mm collars; 152 mm vent collar)	90 lb

DR65A dimensions in inches (millimeters)

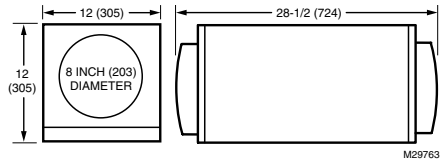

DR120A dimensions in inches (millimeters)

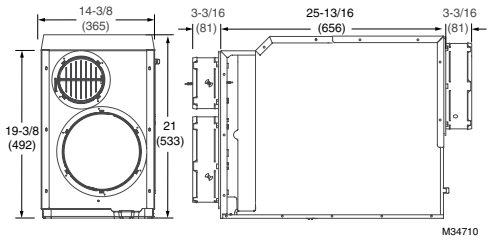

DR90A dimensions in inches (millimeters)

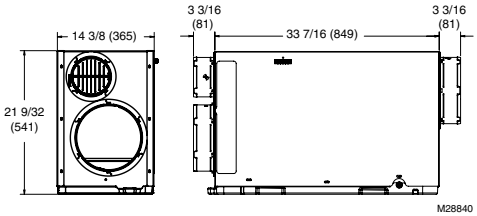

TrueDRY™ Humidification Systems

Parts List DR65

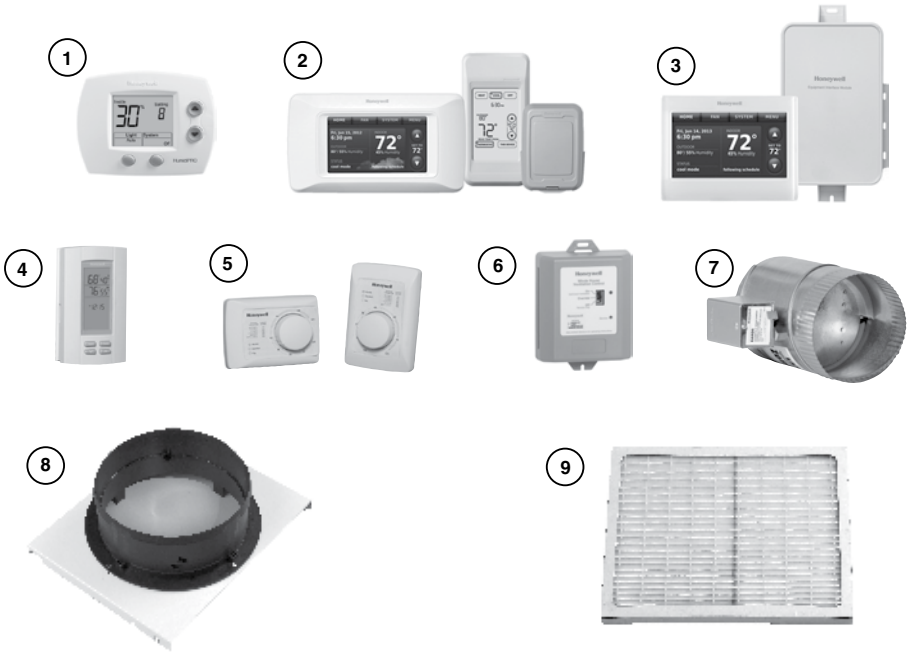

Figure Reference	Description	Part Number
1	HumidiPRO Digital Humidity Control	H6062A1000
2	Prestige Comfort System	YTHX9321R5003
3	VisionPRO IAQ Total Comfort Control	YTH9421C1010
4	TrueIAQ digital IAQ control	DG115EZIAQ
5	H8908D Manual Dehumidistat	H8908DSPST
6	Automatic ventilation control	W8150A1001
7	Motorized ventilation damper	EARD 6
	Compressor overload	50049537-001
	Compressor relay, DPDT 24 VAC, 30A	50049537-002
	Run capacitor, 35 MFD	50049537-003
8	8-in. Duct Collar	50049537-004
9	Filter	50049537-005
	Fan	50049537-006
	Fan relay, SPDT, 24 Vac, 15A	50035445-011

M34850

Parts List DR65

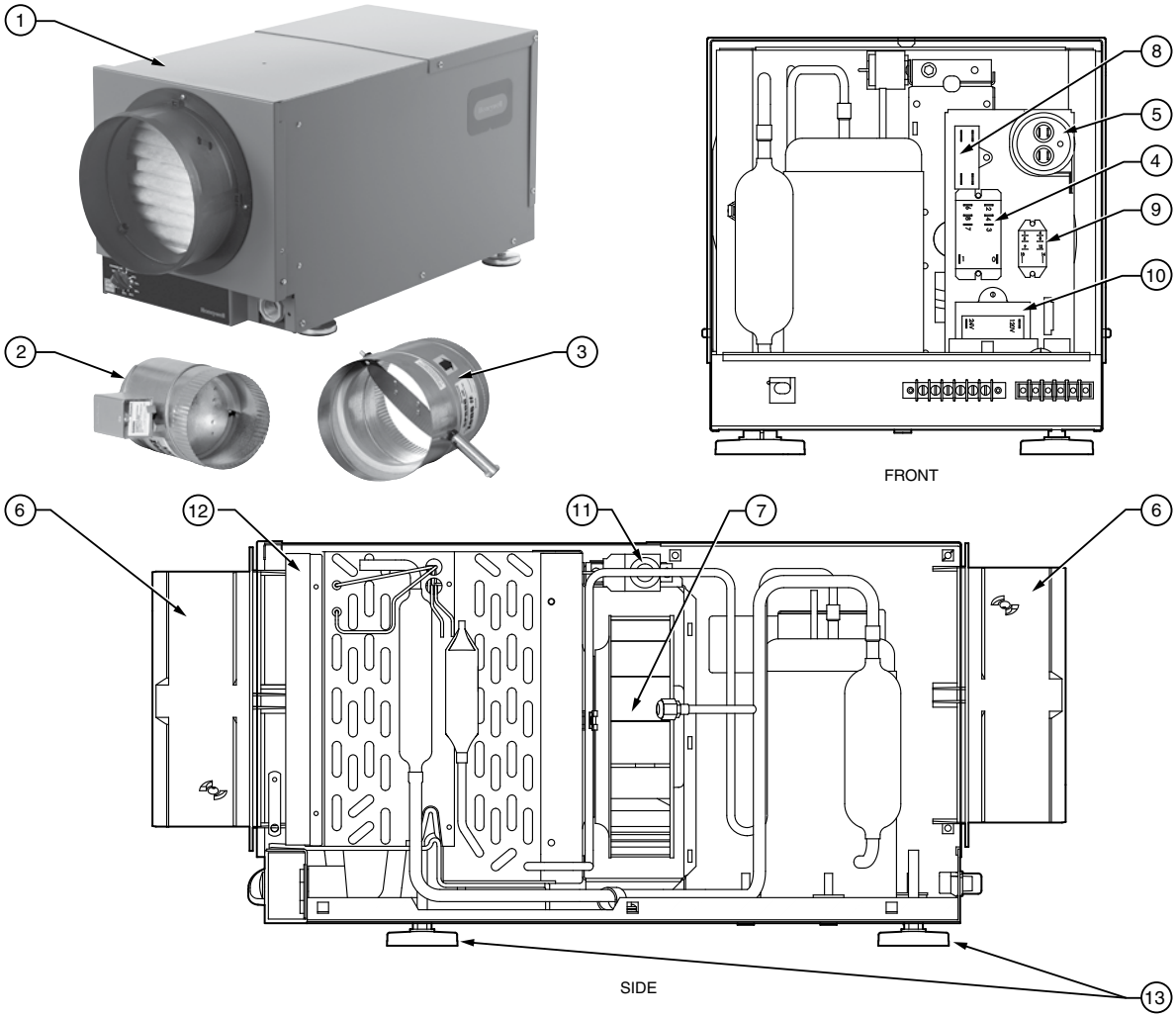

Figure Reference	Base and Accessory Parts	Part Number
1	TrueDRY DR65	DR65A2000/U
2	Motorized Ventilation Damper	EARD6
3	8 in. Backdraft Damper (Discard Included Counterweight)	SPRD8
	Replacement Parts	
4	Compressor Relay, 24 VAC, 30 A	50049537-002
5	Compressor Run Capacitor	50049537-003
6	8" Duct Collar	50049537-004
7	Fan Assembly	50049537-006
8	Capacitor - Fan	50070204-001
9	Fan Relay, SPDT, 24 VAC, 15A	50035445-011
10	Transformer 120/24 VAC, 40 VA	50035445-013
11	Defrost Thermostat	50070204-002
12	Filter	50049537-005
13	Leveling Foot	50035445-019

M33733

TrueDRY Parts and Accessories

Material Number	Description	Used With
50035445-003/U	DH150 capillary tubes, 0.050in x 0.124in x 59.00in	DH150
50035445-005/U	DH150 accumulator	DH150
50035445-006/U	DH150 filter/drier	DH150
50035445-007/U	DH150 tube -cond to filter	DH150
50035445-008/U	DH150 tube -discharge line	DH150
50035445-009/U	DH150 condenser	DH150
50035445-010/U	DH150 impeller	DH150
50035445-011/U	Fan relay, SPDT, 24 Vac, 15A	DR65, DR90, DR120, DH150
50035445-012/U	DH150 45 MFD capacitor -compressor	DH150
50035445-014/U	DR90 compressor relay, SPST, 24 Vac, 30A	DR90, DR120
50035445-015/U	DH150 15 MFD capacitor-impeller	DH150
50035445-020/U	DH150 MERV 11 filter	DH150
50049536-001/U	DR90 compressor run capacitor	DR90A1000
50049536-004/U	DR90 6" duct collar	DR93
50049536-005/U	DR90 10" duct collar	DR90, DR120
50049536-006/U	DR90 magnetic door	DR90A1000
50049536-007/U	Defrost Thermostat for TrueDRY	DR90A1000, DH150
50049536-008/U	Styrofoam Assembly with Tape	DR90A1000
50049537-001/U	Compressor overload	DR65A1000
50049537-002/U	Compressor relay, DPDT 24 VAC, 30A	DR65
50049537-003/U	Compressor Run capacitor, 35 MFD	DR65
50049537-004/U	8" Duct Collar	DR65
50049537-005/U	DR65 Filter	DR65
50049537-006/U	TrueDRY Blower Motor	DR65, DR90A2000 with date code up to K12XXXXX
50049537-007/U	Defrost Thermostat for TrueDRY	DR65A1000
50070171-001/U	Compressor Run Capacitor	DR90A2000
50070171-002/U	TrueDRY Filter	DR90A2000, DR120
50070171-003/U	TrueDRY Magnetic door, black	DR90A2000, DR120
50070204-001/U	TrueDRY Fan Capacitor	DR65A2000, DR90A2000 with date code up to K12XXXXX
50070204-002/U	Defrost Thermostat for TrueDRY	DR65, DR90, DR120
50070205-001/U	Compressor Run Capacitor	DR120 with date code up to K12XXXXX
50070205-002/U	TrueDRY Blower Motor	DR120
50070205-003/U	TrueDRY Fan Capacitor	DR120
DR120XCRC1/U	TrueDRY Compressor Run Capacitor	DR120A2000, Date Code L12XXXXX and Up
DR90XCFA1/U	TrueDRY Fan Capacitor	DR90A2000, Date Code L12XXXXX and Up

HM700 Electrode Humidifier

The Electrode Humidifier comes with a HumidiPRO™ digital humidity control, and also works seamlessly with Honeywell thermostats including the Lyric™, Prestige® IAQ and VisionPRO® 8000, so you'll have maximum flexibility to integrate it into the system you're installing. The Electrode Humidifier can be remote mounted up to five feet from the system and can provide 11 or 22 gallons per day (GPD). It requires only a potable water supply, water drainage and 110 or 220 power.

- Auto-adaptive technology adjusts for changes in the weather, water and voltage
- Automatically protects against window condensation and frost
- Humidity Boost can be used to increase relative humidity by 5 or 10%
- Easy to use with any of the control options
- When used with Prestige IAQ and VisionPRO 8000 thermostats, the humidifier communicates with the wireless outdoor sensor to make automatic humidity adjustments

Type: Steam
Color: Light Gray
Approximate, Dimensions: 11-7/16 in. wide x 21-7/16 in. high x 6-15/16 in. deep (289 mm wide x 544 mm high x 174 mm deep
Mounting: Mount on sturdy wall (Concrete, Drywall, or Wood)
Temperature Rating: Installation Ambient Temperature - 40°F to 105°F (4°C to 40°C)
Voltage: 120 Vac or 240 Vac; 1.9 or 3.8 kW, 15.9 Amps, 1 Phase
Steam Output: 11 GPD for 110/120V or 22 GPD for 220/240V

Material Number	Description	Capacity (gal. per day)	Capacity (liter per day)	Includes
HM700A1000/U	11 or 22-GPD Electrode Humidifier with HumidiPRO Humidistat	11 or 22 gpd	42 or 83 lpd	HumidiPRO™ H6062 Digital Humidity Control, Distribution kit and 5-ft remote mount hose.

HM700 Electrode Humidifier Accessories and Replacement Parts

Material Number	Description	Includes	
H6062A1000/U	HumidiPRO Humidistat		
HM700ADISTKIT/U	Stainless Steel Distribution Remote Mount Kit	Steam distributor, steam hose, condensate hose and installation hardware	
HM700ACYL2/U	Replacement Canister		
HM700ADVALVE/U	Replacement Drain Valve		
HM700AFVALVE/U	Replacement Fill Valve		

RO Water Filter System

In homes with hard water, Honeywell recommends a Reverse Osmosis Filtration System. The RO Filter System is designed to remove calcium and magnesium from the water. If the water also has high iron, manganese or biological content, the filters may require replacement more than once per year.

- Sediment Pre-Filter — Removes chlorine, sediment.
- Reverse Osmosis Filter — Removes calcium and magnesium, the primary sources of hard water.
- Clean Water Staging Tank — Can be reused each season.
- Quick Connect Plumbing — Simple installation for flow control and plumbing to TrueSTEAM™.
- Optional Permeate Pump — For homes with water pressure lower than 45 psi.

Ambient Temperature Range: 40°F to 100°F (4°C to 38°C)
Connection Type: Plastic body with Quick connect end fittings & pin locks

Material Number	Description
HM600XROF1/U	RO Water Filter for Honeywell Steam Humidifier
50046086-001/U	Bundled replacement kit water filters. Change filters once per humidification season.

Honeywell's STEAM Installation Accessories

Material Number	Description	
50024917-001/U	Honeywell's STEAM 10-Foot Remote Mount Kit. Compatible with all TrueSTEAM models.	
50024917-002/U	Honeywell's STEAM 20-Foot Remote Mount Kit. Compatible with HM612 and HM609 STEAM models.	
50027910-001/U	Duct or Remote Mount Differential Pressure Switch	

Honeywell's STEAM Parts

Material Number	Description
50027998-002/U	TrueSTEAM water level sensor assembly
50043771-001/U	Qty 25 Honeywell's STEAM filter for Solenoid Valve

TrueEASE™ Bypass or Fan-powered Humidifier

HE100 HE150 HE200 HE250 HE300

Honeywell's revolutionary new line of evaporative bypass and fan humidifiers.

- Versatile fit designed for more jobs.
- Operational efficiencies to drive higher margins with values homeowners understand.
- Fast installation for labor and time savings.
- Unintimidating, engaging maintenance to drive repeat business.
- Operational noise reduction for humidity comfort without the ear aches.
- Includes HumidiPRO Digital Humidity Control.

Type: Evaporative Flow-Through Humidifier

Material Number	Capacity (gal. per day)	Capacity (liter per day)	Description
TrueEase Advanced Humidifier			
HE150A1005/U	12 gal. per day	46 L per day	TrueEASE Small Advanced Bypass Humidifier
HE250A1005/U	17 gal. per day	64 L per day	TrueEASE Large Advanced Bypass Humidifier
HE300A1005/U	18 gal. per day	68 L per day	TrueEASE Advanced Fan-Powered Humidifier
TrueEase Advanced Humidifier - Canadian Model			
HE150C1014/U	12 gal. per day	46 L per day	TrueEASE Small Advanced Bypass Humidifier with Additional Installation Hardware
HE250C1014/U	17 gal. per day	64 L per day	TrueEASE Large Advanced Bypass Humidifier with Additional Installation Hardware
TrueEase Basic Humidifier			
HE100A1000/U	12 gal. per day	46 L per day	TrueEASE Small Basic Bypass Humidifier
HE200A1000/U	17 gal. per day	64 L per day	TrueEASE Large Basic Bypass Humidifier
TrueEase Basic Humidifier - Canadian Model			
HE100C1001/U	12 gal. per day	46 L per day	TrueEASE Small Basic Bypass Humidifier with Additional Installation Hardware
HE200C1001/U	17 gal. per day	64 L per day	TrueEASE Large Basic Bypass Humidifier with Additional Installation Hardware

TrueEASE Parts and Accessories, Honeywell's STEAM Parts

Material Number	Description
32001647-001/U	Qty 25 Residential humidifier cone screen filter
50032048-002/U	Qty 25 Residential Humidifier quick connect adapter

TrueEASE Parts and Accessories

Material Number	Description	
32001652-002/U	10V transformer	
50041861-001/U	Frame and tray assembly for small bypass models	
50041861-002/U	Frame and tray assembly for large bypass models	
50041883-001/U	DC Solenoid valve	
50041883-002/U	AC Solenoid valve	
50041890-001/U	Small bypass duct with automatic damper	
50041890-002/U	Large bypass duct with automatic damper	
50041919-001/U	Frame and tray assembly for fan model	
50045729-001/U	Blower and motor assembly with isolator	
50050349-001/U	15V transformer	
50052642-001/U	Bottom cover for small advanced bypass models	

TrueEASE Replacement Parts

Material Number	Description	Used With
50057547-001/U	Circuit board for HE300 TrueEASE fan humidifier	HE300A1005
50057547-002/U	Circuit board for HE150 TrueEASE small advanced bypass humidifier	HE150A1005, HE150C1014
50057547-003/U	Circuit board for HE250 TrueEASE large advanced bypass humidifier	HE250A1005, HE250C1014

HE225 and HE265 Exploded View

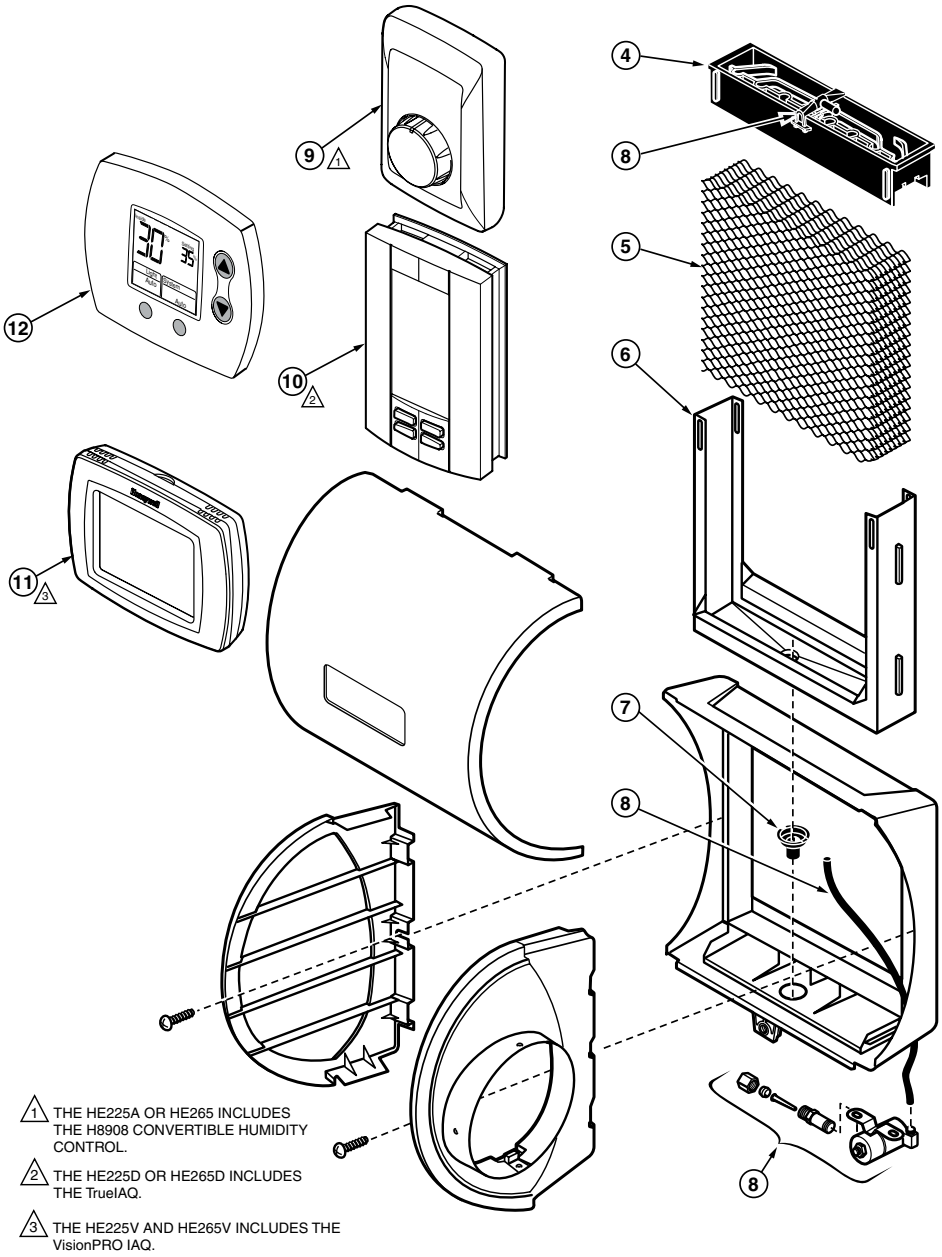

1 THE HE225A OR HE265 INCLUDES THE H8908 CONVERTIBLE HUMIDITY CONTROL.

2 THE HE225D OR HE265D INCLUDES THE TrueIAQ.

3 THE HE225V AND HE265V INCLUDES THE VisionPRO IAQ.

No.	Description	HE225 Part Number	HE265 Part Number
4	PerfectFlo™ water distribution tray	32001619-001	32001630-001
5	Humidifier Pad (pad has antimicrobial coating)	HC22E1003	HC26E1004
6	Humidifier Pad Frame	32001621-001	32001632-001
7	Drain fitting	32001615-001	32001615-001
8	Solenoid valve assembly(includes nozzle)	32001639-002	32001639-002
9	H8908 Humidity Control	H8908ASPST	H8908ASPST
10	TrueIAQ Digital Automatic Control with Outdoor Enthalpy Sensor	DG115EZIAQ	DG115EZIAQ
11	VisionPRO IAQ with outdoor temp sensor	YTH9421C1010	YTH9421C1010
12	HumidiPRO Digital Humidity Control	H6062A1000	H6062A1000
—	Hardware Kit for Solenoid Assembly (same as Solenoid valve assembly without the solenoid valve)	32001752-001	32001752-001
—	Current Sensing Relay	32001754-001	32001754-001

M23213C

Humidifier Replacement Pads and Filters

Material Number	Description	Includes	Used With	
32000146-001/U	HE120 Replacement Humidifier Pad (includes clips)		HE120	
50028044-001/U	Plumb in-line scale and sediment Humidifier replacement filter with quick-connect fittings.	1 filter	All Honeywell steam and evaporative humidifiers. Also fits AprilAire evaporative models.	
HC22A1007/U	HE220 Humidifier Pad	Standard Humidifier Pad	Honeywell HE100, HE150, HE220, HE225, Aprilaire Models 110, 220, 550, 558	
HC22E1003/U	HE225 Humidifier Pad with AgION™ Coating	AgION Antimicrobial Humidifier Pad	Honeywell HE100, HE150, HE220, HE225, Aprilaire Models 110, 220, 550, 558	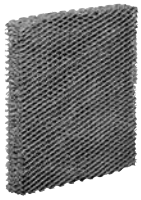
HC26A1008/U	HE260 Humidifier Pad	Standard Humidifier Pad	Honeywell HE200, HE250, HE260, HE265, HE300, HE360, HE365, Aprilaire 350, 360, 560, 568, 600, 700, 760, 768	
HC26E1004/U	HE265 Humidifier Pad with AgION™ Coating	AgION Antimicrobial Humidifier Pad	Honeywell HE200, HE250, HE260, HE265, HE300, HE360, HE365, Aprilaire 350, 360, 560, 568, 600, 700, 760, 769	

Humidifier Parts

Material Number	Description	Used With
32000132-001/U	HE120 24 Vac Motor	HE120
32000136-001/U	HE120 Float Valve	HE120
32000408-001/U	HE360, HE365 Feed Tube Nozzle	HE360, HE365
32000429-001/U	HE360, HE365 Fan Blade	HE360, HE365
32001615-001/U	HE220, HE225, HE260, HE265, HE360, HE365 Drain Fitting	HE220, HE225, HE260, HE265, HE360, HE365
32001619-001/U	HE220, HE225, HE360A1001 PerfectFlo™ Water Distribution Tray	HE220, HE225, HE360
32001621-001/U	HE220, HE225 Humidifier Pad Frame	HE220, HE225
32001630-001/U	HE260, HE265, HE360, HE365 PerfectFlo™ Water Distribution Tray	HE260, HE265, HE360, HE365
32001632-001/U	HE260, HE265, HE360, HE365 Humidifier Pad Frame	HE260, HE265, HE360, HE365
32001639-002/U	HE220, HE225, HE260, HE265 Solenoid Valve Assembly (includes water feed tube and nozzle). Sold in Bulk Packs	HE220, HE225, HE260, HE265
32001652-001/B	HE220, HE225, HE260, HE265 Transformer (10VA). Sold in Bulk Packs	HE260, HE265, HE360, HE365
32001676-001/U	HE360, HE365 Printed Wiring Board Assembly. Sold in Bulk Packs	HE360, HE365
32001752-001/U	HE220, HE225, HE260, HE265, HE360, HE365 Hardware Kit for Solenoid Assembly (does not include solenoid valve)	HE220, HE225, HE260, HE265, HE360, HE365
32001754-001/U	Current Sensing Relay	HE220, HE225, HE260, HE265, HE360, HE365
32001876-001/U	HE360, HE365 Solenoid Valve Assembly (includes water feed tube). Sold in Bulk Packs	HE360, HE365
32006450-001/U	HE440 Filter Pack	HE440
50027997-001/U	SOLENOID VALVE	
50028001-001/U	Remote-Mount Nozzles for TrueSTEAM	HM509; HM512
50028003-001/U	TrueSTEAM Duct Nozzle	HM509; HM512
50033181-001/U	Large water Tank for TrueSTEAM and Honeywell STEAM humidifiers	HM509; HM512; HM609; HM612
50040111-001/U	Ductboard Adaptor Kit for TrueSTEAM Remote Mount	HM509; HM512
50043683-001/U	Water Backflow Prevention Valve with Manual Water Shutoff. For use with TrueSTEAM	HM509; HM512
HM600XGSKT/U	Tank Replacement Gasket for Honeywell Steam Humidifier	HM609, HM612

S688 Sail Switch

The Sail Switch activates an electronic air cleaner, a humidifier, or other equipment in response to airflow from the system fan. The S688A is mounted in the return air duct where the sail will be in the direct path of an unrestricted air stream.

- Simplified installations with multi-speed fans, inaccessible air handlers, fan motors with voltage or phase different from controlled equipment; eliminated wiring to system fan.
- Polyester film sail mounted on a micro switch snap switch.
- Removable spring counterbalances sail to allow mounting in either vertical (up or down) or horizontal air flow.
- Top and bottom conduit knockouts for wiring convenience.
- Low air velocity switch operation makes at 250 fpm and breaks at 75 fpm.

Application: Air Flow Switch
Contact Ratings (AFL): N.O. Contacts: 2.0 A @ 24 Vac, 120 Vac; N.O. Contacts: 1.0 A @ 240 Vac; N.C. Contacts: 1.0 A @ 24 Vac, 120 Vac; N.C. Contacts: 0.5 A @ 240 Vac
Contact Ratings (ALR): N.O. Contacts: 12.0 A @ 24 Vac, 120 Vac; N.O. Contacts: 6.0 A @ 240 Vac; N.C. Contacts: 6.0 A @ 24 Vac, 120 Vac; N.C. Contacts: 3.0 A @ 240 Vac
Contact Ratings (resistive): N.O. Contacts: 5.0 A @ 24 Vac, 120 Vac; N.O. Contacts: 2.5 A @ 240 Vac; N.C. Contacts: 2.5 A @ 24 Vac, 120 Vac, 240 Vac
Ambient Temperature Range: At switches: 125°F Maximum; At sail: 170°F Maximum (At switches: 52°C Maximum; At sail: 77°C Maximum)
Used With:
Approvals, CSA: Certified
Approvals, Underwriters Laboratories Inc.: UL Listed: File No. E4436, Guide No. XAPX. For use in ambient temperatures normally prevailing in occupiable spaces, which usually are not higher than 77°F (25°C) but occasionally may be as high as 104°F (40°C) for brief periods.

Material Number	Switching	Operating Velocity (fpm)	Operating Velocity (m/s)	Approximate, Dimensions	Insertion Length
S688A1007/U	SPDT	75 fpm-250 fpm	0.4 m/s-22.9 m/s	2 15/16 in. high x 3 3/4 in. wide x 2 in. deep; Sail Dimensions – 5 in. wide (max), 26.2 sq. in. of area (59 mm high x 95 mm wide x 51 mm deep; Sail Dimensions – 127 mm wide (max), 16,903 mm^2)	10 in. (254 mm)

Sail Switch Accessories

Material Number	Description	Used With
123773A/U	Sail assembly for S688A	S688A

HumidiPRO™ Digital Humidity Control

Easy to use, digital control of your home's humidification or dehumidification. HumidiPRO™ will automatically adjust settings for changes in outdoor temperature to ensure no condensation will appear in your home (window protection).

- Automatic humidification (window protection) with included outdoor sensor
- Manual humidification control
- Manual dehumidification control
- Dehumidifier compressor protection
- Large, digital backlit display
- Simple, intuitive programming
- RH% and outdoor temperature calibration
- Adjustable high and low range stops (10-90%)
- Automatically detects presence of outdoor sensor to set control to Automatic or Manual Mode

Type: Humidistat/Dehumidistat
Voltage: 24 Vac
Frequency: 50 Hz; 60 Hz
Mounting: Return Duct (Recommended) or Wall Mount
Differential: 4% to 6% RH

Temperature Range: -20°F to +120°F
Approximate, Dimensions: 3 7/16 in. high x 4 1/2 in. wide x 1 5/16 in. deep (86 mm x 114 mm x 33 mm)
Includes: HumidiPRO Control, Outdoor Sensor, Mounting Hardware

Material Number	Operating Humidity Range (% RH)	Color	Used With
H6062A1000/U	Manual Mode: 10% to 90% RH% (Adjustable) Auto Mode: 10% to 60% RH% (35% Default)	Premier White®	Whole Home Humidifiers or Dehumidifiers

TrueIAQ Automatic Digital IAQ Control

Integrate control of your humidification, dehumidification, ventilation and bathroom fans with Honeywell's TrueIAQ® control. TrueIAQ® automatically adjusts humidity settings and provides maintenance reminders for peak efficiency.

- Setting changes can be made easily with the touch of a button.
- Manages humidification, dehumidification, ventilation and bathroom fans from a central point in your home
- Simultaneously displays both indoor and outdoor temperature and humidity levels on-screen. Automatically adjusts inside settings based on outdoor conditions
- Include individual air quality enhancements to your system with TrueIAQ®, or integrate them all as part of a total air quality system
- Intuitive digital backlit display

Type: Steam Humidifier
Voltage: 24 Vac
Electrical Ratings: 120 Vac, Full Load: 2.0A at 24 Vac, humidifier, dehumidifier, vent contacts

Mounting: Duct or Remote Mount (up to 20 feet/6 meters)
Temperature Range: 1.1°C-40°C
Includes: TrueIAQ control and outdoor sensor for temperature and humidity

Material Number	Operating Humidity Range (% RH)	Color	Used With
DG115EZIAQ/U	95% RH at 95°F, non-condensing	White	Outdoor temp/humidity sensor (included)

H8908 Humidistat/Dehumidistat

The H8908A Humidistat and H8908D Dehumidistat (humidity controllers) provide automatic low voltage control of humidifiers and dehumidifiers or ventilators, respectively, in central heating and air conditioning systems. They have a SPST, snap-acting, dust-proof switch and are designed for wall or surface duct mounting.

- SPST, snap-acting, dust-proof switch and are designed for wall or surface duct mounting.
- Positive ON and OFF settings.
- Twelve-inch ribbon of thin, moisture-sensitive nylon ribbon wound around three bobbins effectively gives optimum control for reliable operation under changing ambient.

Voltage: 24 Vac
Mounting: Duct or Remote Mount (up to 20 feet/6 meters)
Temperature Range: 1.1°C - 40°C

Approximate, Dimensions: 19 in. high x 11 1/4 in. wide x 9 in. deep (482.6 mm H x 285.75 mm L x 228.6 mm D)

Material Number	Color	Application
H8908ASPST/U	White	Provides humidification control for ducts, greenhouses, computer rooms, printing and photographic laboratories, and other applications where electronic accuracy, as well as remote sensing, is desired.
H8908DSPST/U	White	Provides dehumidification control for ducts, greenhouses, computer rooms, printing and photographic laboratories, and other applications where electronic accuracy, as well as remote sensing, is desired.

H46 Humidity Controller

Provide automatic control of a humidifier or dehumidifier for dehumidification in air conditioning systems.

- Positive ON-OFF settings permit manual operation of controlled equipment.
- Impact-resistant, molded plastic cover mounts on wall.
- Fully enclosed, dust free, SPST, snap-acting switch.
- Sensing element of thin, moisture sensitive nylon ribbon provides reliable operation even when ambient temperature conditions change.

Type: Humidity Control
Mounting: Wall mount
Differential: 4% to 6% RH
Temperature Range: 50°F to 125°F (10°C to 52°C)

Approximate, Dimensions: 4 11/16 in. high x 2 15/16 in. wide x 2 1/8 in. deep (119 mm high x 75 mm wide x 54 mm deep)
Tradeline Value: Tradeline

Material Number	Voltage	Electrical Ratings	Operating Humidity Range (% RH)	Color	Description
H46C1166/U	120 Vac, 24 Vac, 240 Vac	120 Vac, Full Load: 7.5A; 120 Vac, Locked Rotor: 30.0A; 120 Vac, Resistive: 12.0A; 240 Vac, Full Load: 3.8A; 240 Vac, Locked Rotor: 15.0A; 240 Vac, Resistive: 6.0A	20 to 80% RH	Premier White®	24/120/240 Vac Wall mounted Premier White® Dehumidistat

H600 Humidity Controllers

Mechanical humidity controllers provide automatic control of humidifiers and dehumidifiers or ventilators in central heating and air conditioning systems.

- Sensing element of thin, moisture sensitive nylon ribbon provides reliable operation even when ambient temperature conditions change.
- Fully enclosed, dust free, SPDT, snap-acting switch.
- Removable setting knob prevents tampering.
- Mount vertically on 2 x 4 in. junction box (not to be duct mounted).
- Includes alternate scale and faceplate for horizontal mounting.

Type: Humidity Control
Voltage: 120 Vac, 24 Vac, 240 Vac
Color: Gray
Mounting: Wall mount
Differential: 5% RH

Temperature Range: 50°F to 125°F (10°C to 52°C)
Operating Humidity Range (% RH): 20 to 80% RH
Approximate, Dimensions: 6 3/16 in. high x 3 3/8 in. wide x 2 1/4 in. deep (157 mm high x 86 mm wide x 57 mm deep)
Tradeline Value: Tradeline

Material Number	Electrical Ratings
H600A1014/U	Humidifier Contacts – 120 Vac, Full Load: 4.4A; 120 Vac, Locked Rotor: 26.4A; 120 Vac; Resistive: 12A; 240 Vac, Full Load: 2.2A; 240 Vac, Locked Rotor: 13.2A; 240 Vac, Resistive: 6A. Dehumidifier Contacts – 120 Vac, Full Load: 7.5A; 120 Vac, Locked Rotor: 3

24 Volt UV Air Purifier with AirBRIGHT™ Odor Absorption

UV2400U1000

UV2400U5000

Honeywell's UV Air Purifier with AirBRIGHT Odor Absorption is installed in the ductwork of your central air system and is designed to help reduce airborne odors, toxic chemical vapors, germs and mold in your home.

- Lamp is Always On
- Replace Lamp Annually
- AirBRIGHT Odor Absorber never needs replacing
- SnapLamp™ features replacement lamp handle with detachable replacement lamp.
- Universal Installation with a single product
- UV Only
- UV + Odor Removal
- Internal Mount
- External Mount

Electrical Ratings: 24V VAC
Electrical Rating (Watts): 16W
Application: Return or Supply Mount
Operating Temperature Range:

Material Number	Description	Contaminants Reduced
UV2400U1000/U	The UV Air Purifier eliminates up to 99 percent of mold spores on the air conditioning coil, helping to maintain system efficiency and airflow. Your customers will experience increased comfort and efficiency.	Airborne Bacteria, Surface Mold
UV2400U5000/U	The UV Air Purifier eliminates up to 99 percent of mold spores on the air conditioning coil. The AirBRIGHT Odor Absorber reduces potentially harmful VOC's and odors without the use of harmful byproducts.	Airborne Bacteria, Surface Mold and ODOR.

Dimensions in inches (millimeters)

External mount

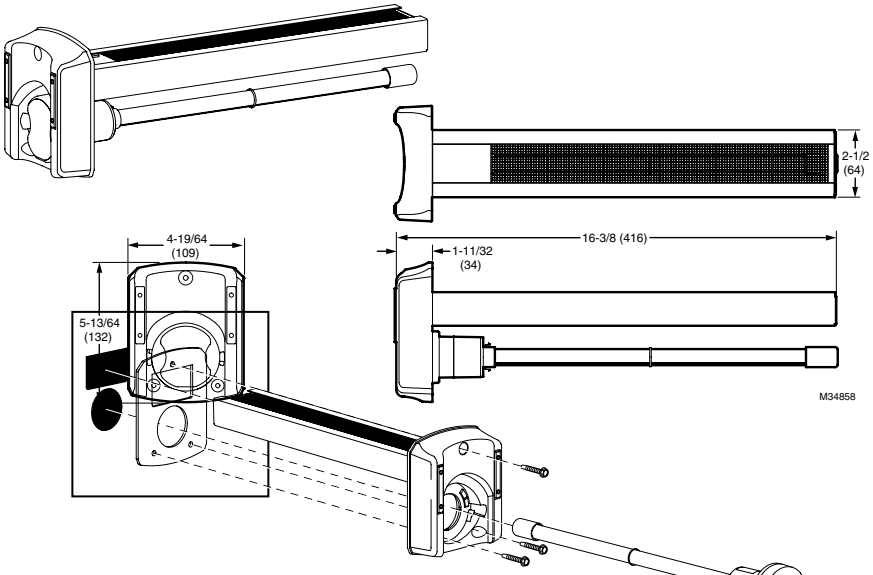

Internal Mount

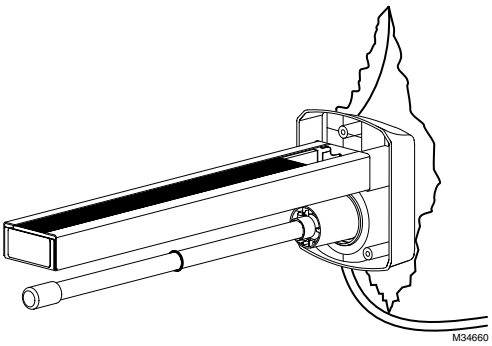

24 Volt UV Air Purifier with AirBRIGHT™ Odor Absorption

The UC100 Ultraviolet Air Treatment System Replacement Lamp is for use with the UV100 Ultraviolet Air Treatment System.

Material Number	Description	Used With	
UV2400XBAL1/U	Replacement Ballast for UV2400	UV2400	
UV2400XDBA1/U	Duct Board Adapter for UV2400	UV2400	
UV2400XLAM1/U	Replacement Lamp for UV2400	UV2400	
UV2400XPCO1/U	The AirBRIGHT Odor Absorber reduces potentially harmful VOC's and Odors in the home without the use of harmful byproducts.	UV2400	

UV100 Ultraviolet Air Treatment Systems

UV offering both air (return) and surface (coil) ultraviolet treatment systems to inactivate live airborne particles and surface mold.

Application: Return Air or Coil Irradiation Application
Operating Temperature Range: Outside duct – 30°F to 104°F: Inside duct – 30°F to 140°F (Outside duct – -2°C to +40°C: Inside duct – -2°C to +60°C)

Dimensions in inches (millimeters)

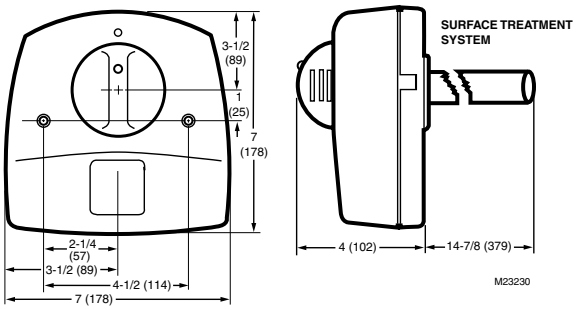

Approximate, Dimensions in inches (millimeters)

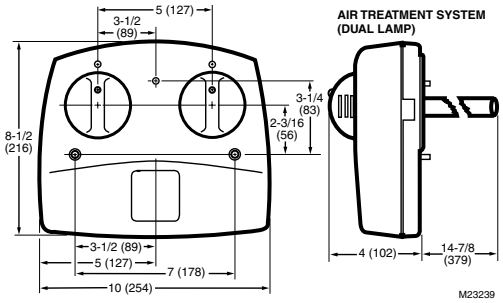

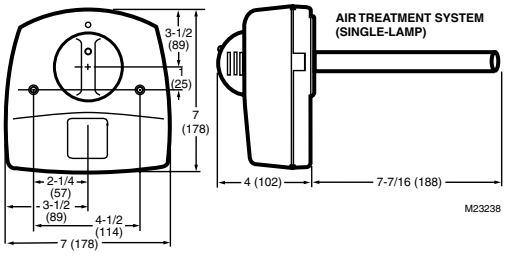

Material Number	Contaminants Reduced	Electrical Ratings	Electrical Rating (Watts)	Description
UV100A1059/U	Airborne Bacteria, Surface Mold	120 Vac	36W	Ultraviolet Surface Treatment or Air Treatment System, Coil Plus Model
UV100E1043/U	Airborne Bacteria	120 Vac	18W	SmartLamp Ultraviolet Air Treatment System, Single Lamp Return Air Model
UV100E2009/U	Airborne Bacteria	120 Vac	36W each	SmartLamp Ultraviolet Air Treatment System, Dual Lamp Return Air Model

Possible mounting locations for Ultraviolet Air Treatment Systems

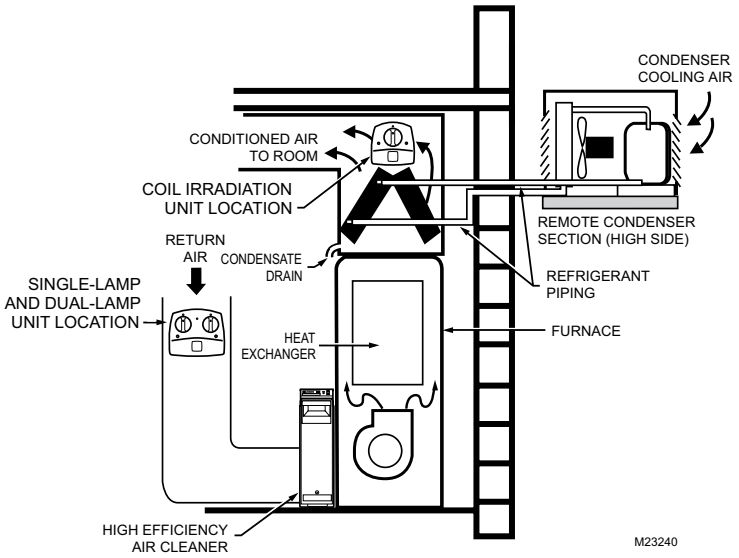

Replacement Lamp Ultraviolet Air Treatment System

The UC100 Ultraviolet Air Treatment System Replacement Lamp is for use with the UV100 Ultraviolet Air Treatment System.

Material Number	Electrical Ratings (Watts)	Description	Used With	
UC100E1006/U	18W	Replacement SnapLamp for UV100E1001 and UV100E1043, blue handle.	UV100E1001, UV100E1043	
UC100E1030/U	36W	Replacement SnapLamp for UV100E3007, UV100E1035, UV100A1059 and UV100A2008, blue handle.	UV100A1018, UV100E3007, UV100E1035, UV100A2009, UV100A1059, UV100A2008	
UC18W1004/U	18W	Replacement Bulb for 18W SnapLamp Models	UC100A1005, UC100E1006, UV100A1000, UV100E1043	
UC36W1006/U	36W	Replacement Bulb for 36W SnapLamp Models	UC100A1013, UC100A1054, UC100E1014, UC100E1030, UV100A1018, UV100A1059, UV100A2008, UV100E2009, UV100E3007	

TrueFRESH™ Balanced Ventilation System

- Removable Duct Collars
- Damperless Balancing
- Adjustable Hanging Straps
- Centralized Wiring and Speed Control
- Customizable
- Compact Size
- Meets ASHRAE 62.2 Standards
- 5-Year Warranty

Defrost Control: Exhaust Only Defrost
Materials: Polypropylene 10 inch HRV Core
Electrical Ratings: 120 Vac
Frequency: 60 Hz

Material Number	Airflow Capacity (cfm)	Description	Sensible Effectiveness
Energy Star rated Ventilators			
VNT6150H1000/U	150 cfm at external static pressure 0.4 in. wc	150 cfm Heat Recovery Ventilator	0.8
VNT6200H1000/U	200 cfm at external static pressure 0.4 in. wc	200 cfm Heat Recovery Ventilator	0.84
TrueFRESH™ Energy Recovery Ventilators			
VNT5070E1000/U	80 cfm at external static pressure 0.4 in. wc	70 cfm Compact Energy Recovery Ventilator	
VNT5150E1000/U	159 cfm at external static pressure 0.4 in. wc	150 cfm Energy Recovery Ventilator	0.67
VNT5200E1000/U	188 cfm at external static pressure 0.4 in. wc	200 cfm Energy Recovery Ventilator	0.69
TrueFRESH™ Heat Recovery Ventilators			
VNT5070H1000/U	75 cfm at external static pressure 0.4 in. wc	70 cfm Compact Heat Recovery Ventilator	
VNT5150H1000/U	150 cfm at external static pressure 0.4 in. wc	150 cfm Heat Recovery Ventilator	0.78
VNT5200H1000/U	200 cfm at external static pressure 0.4 in. wc	200 cfm Heat Recovery Ventilator	0.71

Dimensions in inches (millimeters)

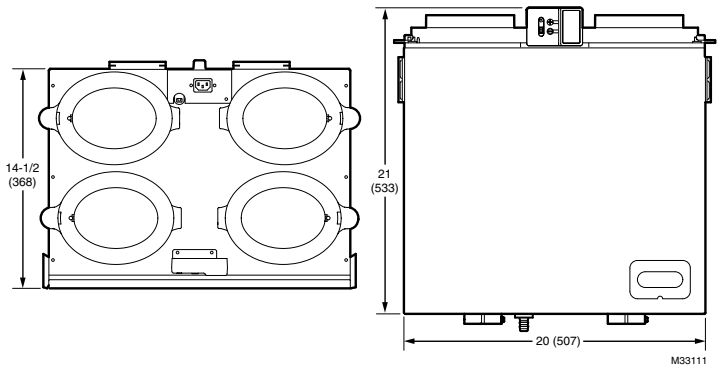

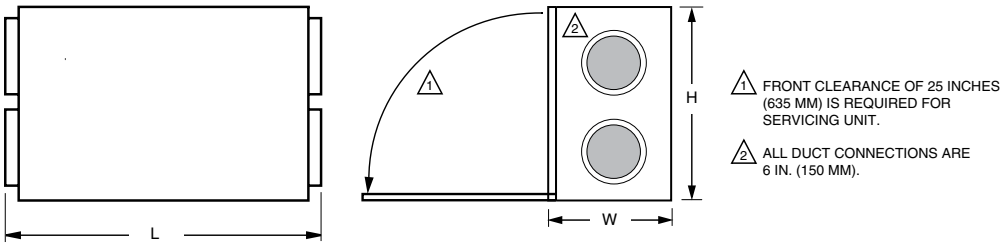

VNT5150H1000, VNT5150E1000 or VNT6150H1000: H = 22 1/2 in. (572 mm), W = 11 1/2 in. (295 mm), L = 29 1/2 in. (749 mm)
VNT5200H1000, VNT5200E1000 or VNT6200H1000: H = 22 1/2 in. (572 mm), W = 16 1/2 in. (422 mm), L = 29 1/2 in. (749 mm)

M28919A

VNT5070 Parts List

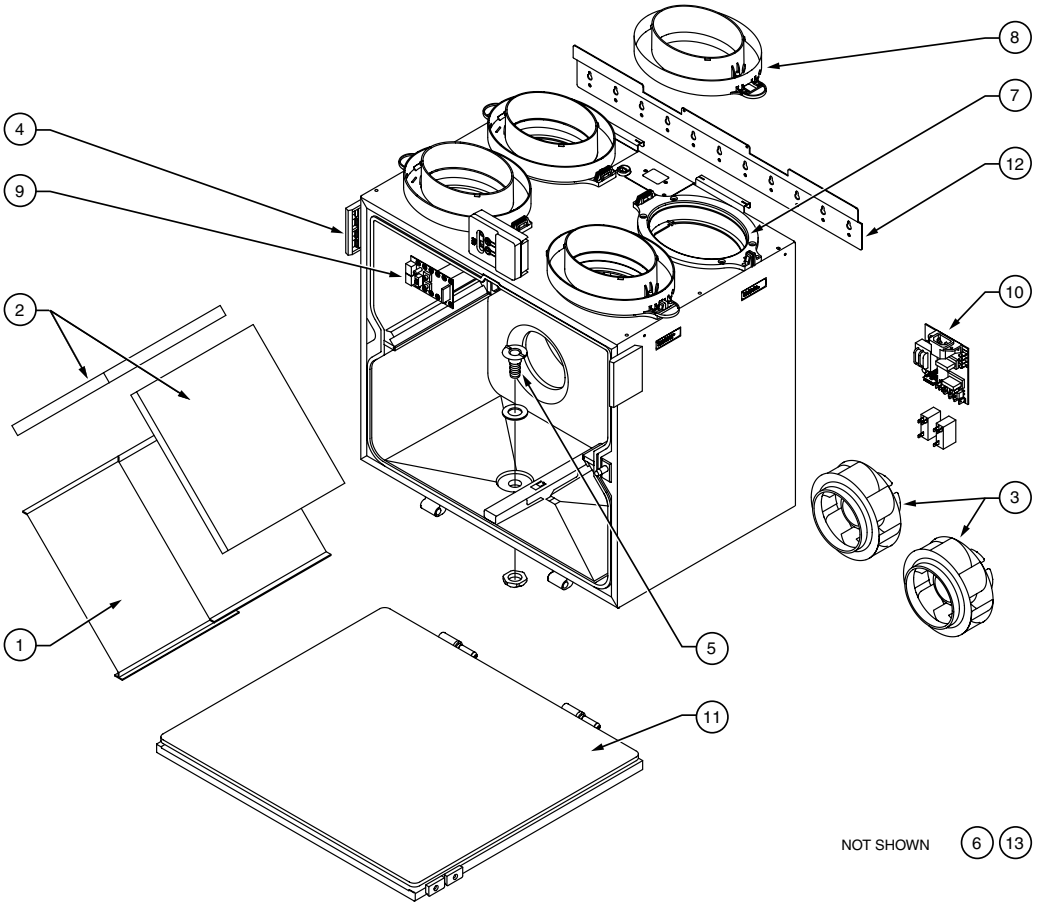

Parts List		
Figure Number	Description	VNT5070
1	Polypropylene HRV Core	50063805-001 9” Core
	Enthalpy ERV Core	50063805-002 9” Core
2	Replacement Filter Kit	50063805-003
3	Replacement Motor	50063805-004
4	Latch & Hinge Kit	50053952-014
5	Condensation Drain Fitting Kit	50053952-011
6	Adjustable Hanging Strap Set (optional on VNT5070)	50053952-009
7	5” diameter Plastic Keeper	50063805-006
8	5” diameter Plastic Collar	50063805-005
9	Replacement LVC Electronic Board (Speed Control)	50063805-010
10	Replacement HVC Electronic Board	50053952-013
11	Front Access Door	50063805-007
12	Mounting Bracket	50063805-008
13	Matrix Ventilation Hood	50063805-009

Parts List (not illustrated)	
Honeywell Part Number	Description
50053952-016	Drain Cap (VNT5150E1000V and VNT5200E1000 only)
50053952-020	20/40/60 Minute Timer

M33731

VNT5150 and VNT5200 Parts List

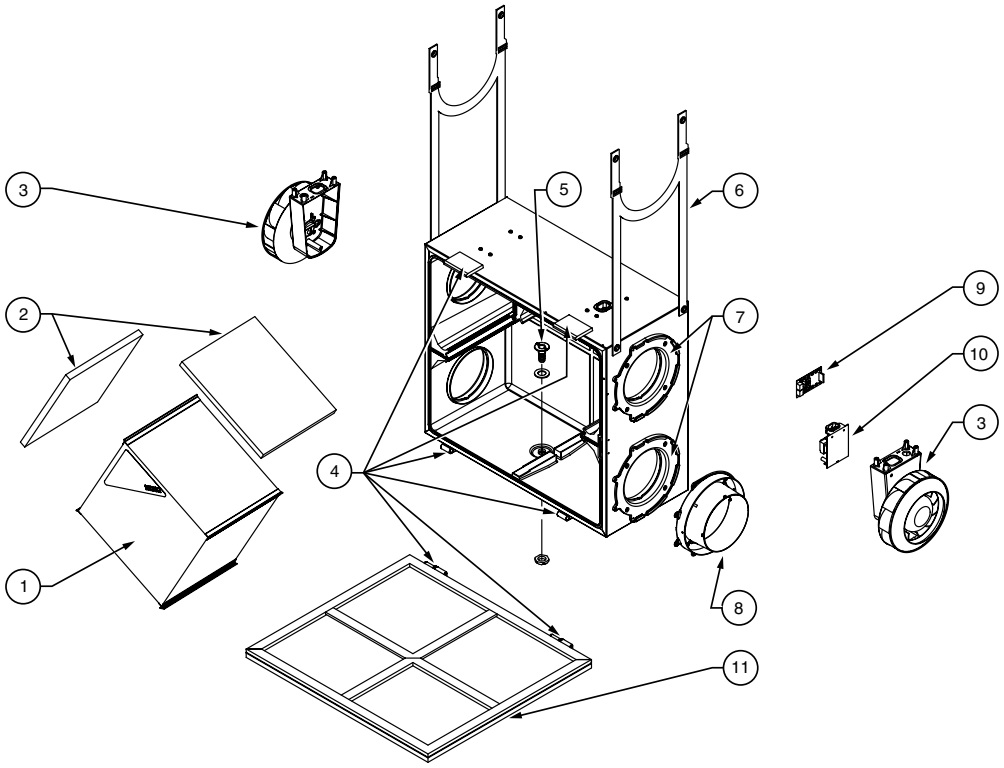

Parts List			
Figure Number	Description	VNT5150	VNT5200
1	Polypropylene HRV Core	50053952-001 10” Core	50053952-002 15” Core
	Enthalpy ERV Core	50053952-003 10” Core	50053952-004 15” Core
2	Replacement Filter Kit	50053952-005	50053952-006
3	Replacement Motor	5053952-010	
4	Latch & Hinge Kit	50053952-014	
5	Condensation Drain Fitting Kit	50053952-011	
6	Adjustable Hanging Strap Set (optional on VNT5070)	50053952-009	
7	6" diameter Plastic Keeper	50053952-008	
8	6" diameter Plastic Double Collar	50053952-007	
9	Replacement LVC Electronic Board (Speed Control)	50053952-012	
10	Replacement HVC Electronic Board	50053952-013	
11	Front Access Door	50053952-015	

Parts List (not illustrated)	
Honeywell Part Number	Description
50053952-016	Drain Cap (VNT5150E1000V and VNT5200E1000 only)
50053952-020	20/40/60 Minute Timer

M33729

VNT6150 and VNT6200 Parts List

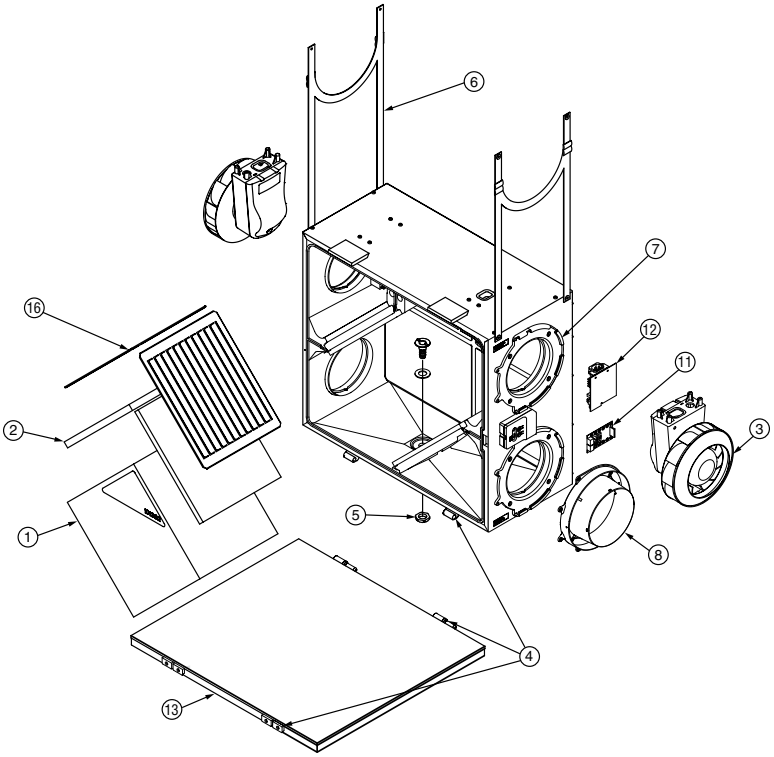

No.	Description	VNT6150	VNT6200
1	Polypropylene HRV Core	50053952-001 10” Core	50053952-002 15” Core
2	Replacement Filter Kit	50053952-005	50053952-006
3	Replacement Motor	VNT6150XIMPEL1	50053952-010
4	Latch & Hinge Kit	50053952-014	
5	Condensation Drain Fitting Kit	50053952-011	
6	Adjustable Hanging Strap Set	50053952-009	
7	6" diameter Plastic Keeper	50053952-008	
8	6" diameter Plastic Double Collar	50053952-007	
11	Replacement LVC Electronic Board (Speed Control)	VNT6150XLVCBD1	VNT6200XLVCBD1
12	Replacement HVC Electronic Board	50053952-013	
13	Front Access Door	50053952-015	
16	Aluminum Distribution Plates	VNT6150XALPLT1	VNT6200XALPLT1
PARTS NOT DISPLAYED			
	20/40/60 Minute Timer (compatible with all HRVs & ERVs)	50053952-020	

M34717

VNT5070E Ventilation Performance

VNT5070E1000 Ventilation Performance

External Static Pressure		Net Supply Air Flow		Gross Air Flow			
				Supply		Exhaust	
Pa	in. W.C.	L/s	CFM	L/s	CFM	L/s	CFM
25	0.1	49	105	49	105	46	97
50	0.2	46	97	47	99	41	86
75	0.3	44	92	44	93	41	86
100	0.4	37	80	38	81	34	73
125	0.5	34	73	35	74	29	63
150	0.6	29	62	29	63	25	52
175	0.7	23	48	23	49	18	37
200	0.8	22	46	22	47	10	20

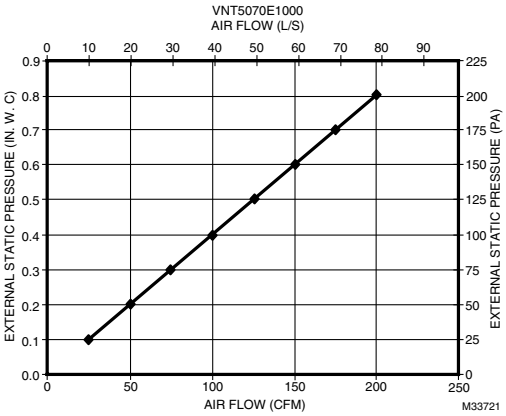

VNT5070E Energy Performance

VNT5070E1000 Energy Performance

	Supply Temperature		Net Supply Air Flow		Average Power	Sensible Recovery	Apparent Sensible
	°C	°F	L/s	CFM	Watts	Efficiency %	Effectiveness %
Heating	0	32	20	41	30	65	74
	0	32	30	64	36	64	71
	-15	5	16	35	27	54	80
	35	95	19	41	30		
	35	95					

M33722

VNT5070H Ventilation Performance

VNT5070H1000 Ventilation Performance

External Static Pressure		Net Supply Air Flow		Gross Air Flow			
				Supply		Exhaust	
Pa	in. W.C.	L/s	CFM	L/s	CFM	L/s	CFM
25	0.1	47	99	48	100	48	102
50	0.2	44	93	45	94	43	92
75	0.3	39	83	40	84	38	80
100	0.4	35	75	35	75	36	78
125	0.5	30	65	30	66	32	68
150	0.6	27	56	27	57	25	52
175	0.7	22	46	22	47	19	41

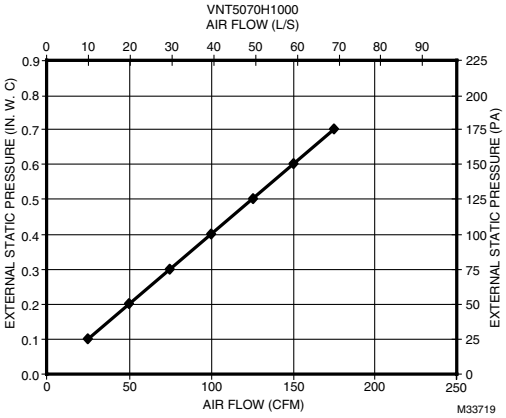

VNT5070H Energy Performance

VNT5070H1000 Energy Performance

	Supply Temperature		Net Supply Air Flow		Average Power	Sensible Recovery	Apparent Sensible
	°C	°F	L/s	CFM	Watts	Efficiency %	Effectiveness %
Heating	0	32	19	40	28	64	72
	0	32	30	65	40	59	66
	-25	-13	18	37	30	55	73
	35	95					

M33720

TrueFRESH Ventilation System

VNT5150E Ventilation Performance

VNT5150E1000 Ventilation Performance

External Static Pressure		Net Supply Air Flow		Gross Air Flow			
				Supply		Exhaust	
Pa	in. W.C.	L/s	CFM	L/s	CFM	L/s	CFM
25	0.1	97	207	99	210	99	211
50	0.2	89	189	91	193	91	193
75	0.3	88	187	84	179	84	178
100	0.4	75	159	76	162	76	162
125	0.5	70	148	71	150	69	147
150	0.6	62	131	63	133	62	131
175	0.7	55	116	55	118	55	117
200	0.8	49	104	50	106	48	102
225	0.9	42	90	43	91	43	92
250	1.0	36	77	37	78	40	86
275	1.1	32	68	32	69	32	69

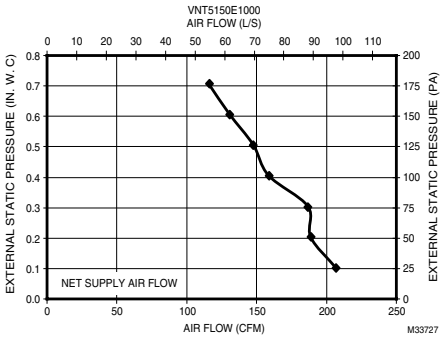

VNT5150E Energy Performance

VNT5150E1000 Energy Performance

	Supply Temperature		Net Supply Air Flow		Average Power	Sensible Recovery	Apparent Sensible
	°C	°F	L/s	CFM	Watts	Efficiency %	Effectiveness %
Heating	0	32	24	51	58	65	76
	0	32	38	80	76	65	73
	0	32	56	118	96	62	70
	-15	5	26	55	59	52	78
	35	95	30	64	66		

M33728

VNT5150H Ventilation Performance

VNT5150H1000 Ventilation Performance

External Static Pressure		Net Supply Air Flow		Gross Air Flow			
				Supply		Exhaust	
Pa	in. W.C.	L/s	CFM	L/s	CFM	L/s	CFM
25	0.1	91	193	91	194	103	217
50	0.2	84	178	85	179	95	201
75	0.3	77	163	77	163	86	183
100	0.4	71	150	71	151	80	169
125	0.5	63	133	63	134	71	152
150	0.6	57	120	57	121	66	138
175	0.7	51	109	51	109	57	121
200	0.8	46	96	46	96	50	106
225	0.9	40	85	40	86	43	91
250	1	35	75	36	75	39	82

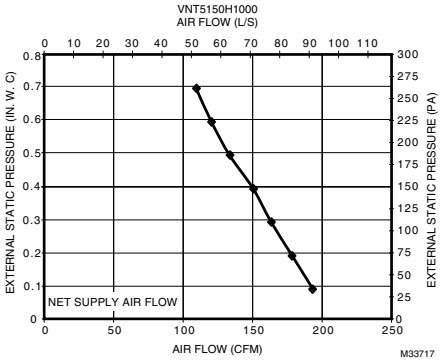

VNT5150H Energy Performance

VNT5150H1000 Energy Performance

	Supply Temperature		Net Supply Air Flow		Average Power	Sensible Recovery	Apparent Sensible
	°C	°F	L/s	CFM	Watts	Efficiency %	Effectiveness %
Heating	0	32	31	65	72	66	75
	0	32	39	83	80	63	72
	0	32	50	107	94	60	67
	-25	-13	36	76	72	56	73

M33718

VNT5200E Ventilation Performance

VNT5200E1000 Ventilation Performance

External Static Pressure		Net Supply Air Flow		Gross Air Flow			
				Supply		Exhaust	
Pa	in. W.C.	L/s	CFM	L/s	CFM	L/s	CFM
25	0.1	115	244	116	247	108	230
50	0.2	106	225	107	228	101	215
75	0.3	98	208	99	210	95	202
100	0.4	88	188	89	190	83	177
125	0.5	81	173	82	175	74	157
150	0.6	71	150	71	152	67	142
175	0.7	65	139	66	140	60	127
200	0.8	57	122	58	124	52	110
225	0.9	49	105	50	106	42	89
250	1	40	86	41	87	67	74
275	1.1	34	72	34	73	30	63

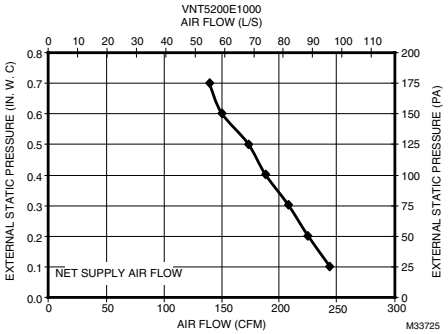

VNT5200E Energy Performance

VNT5200E1000 Energy Performance

	Supply Temperature		Net Supply Air Flow		Average Power	Sensible Recovery	Apparent Sensible
	°C	°F	L/s	CFM	Watts	Efficiency %	Effectiveness %
Heating	0	32	37	78	74	71	81
	0	32	50	107	80	72	79
	0	32	71	150	102	69	77
	-15	5	36	75	65	58	82
	35	95	35	75	72		

M33726

VNT5200H Ventilation Performance

VNT5200H1000 Ventilation Performance

External Static Pressure		Net Supply Air Flow		Gross Air Flow			
				Supply		Exhaust	
Pa	in. W.C.	L/s	CFM	L/s	CFM	L/s	CFM
25	0.1	117	248	118	250	130	277
50	0.2	108	229	109	231	119	253
75	0.3	102	218	103	220	110	234
100	0.4	94	200	95	202	101	216
125	0.5	85	181	86	183	92	197
150	0.6	77	163	78	165	82	175
175	0.7	69	146	70	148	71	151
200	0.8	61	129	61	131	60	128
225	0.9	52	110	52	111	49	104
250	1	45	96	46	97	40	86

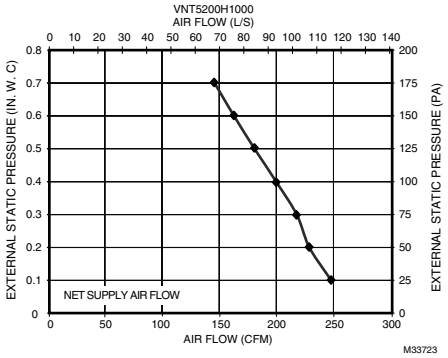

VNT5200H Energy Performance

VNT5200H1000 Energy Performance

	Supply Temperature		Net Supply Air Flow		Average Power	Sensible Recovery	Apparent Sensible
	°C	°F	L/s	CFM	Watts	Efficiency %	Effectiveness %
Heating	0	32	55	118	106	61	71
	0	32	75	160	132	58	65
	0	32	87	185	150	55	62
	-25	-13	57	120	105	58	72

M33724

VNT6150H Ventilation Performance

EXTERNAL STATIC PRESSURE		NET SUPPLY AIR FLOW		GROSS AIR FLOW			
				SUPPLY		EXHAUST	
Pa	in. W.C.	L/s	CFM	L/s	CFM	L/s	CFM
25	0.1	72	153	72	153	67	142
50	0.2	67	142	68	143	61	129
75	0.3	61	130	62	130	55	116
100	0.4	55	117	55	118	47	101
125	0.5	49	103	49	103	41	87
150	0.6	42	88	42	89	34	73
175	0.7	35	75	35	75	27	59
200	0.8	28	61	28	61	22	46

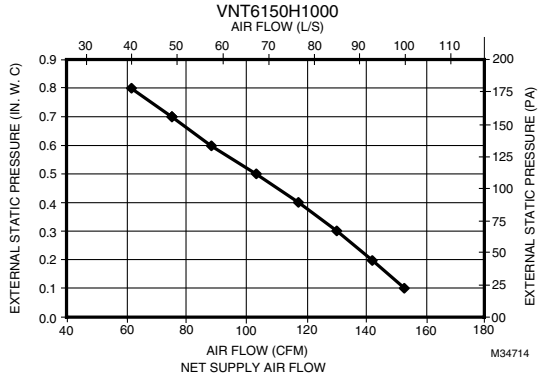

VNT6150H Energy Performance

VNT6150H1000 Energy Performance

	SUPPLY TEMPERATURE		NET SUPPLY AIR FLOW		AVERAGE POWER	SENSIBLE RECOVERY	APPARENT SENSIBLE
	°C	°F	L/s	CFM	Watts	Efficiency %	Effectiveness %
HEATING	0	32	31	66	52	75	84
	0	32	40	84	64	73	80
	0	32	50	106	74	70	77
	-25	-13	32	68	49	62	81

M34715

VNT6200E Ventilation Performance

EXTERNAL STATIC PRESSURE		NET SUPPLY AIR FLOW		GROSS AIR FLOW			
				SUPPLY		EXHAUST	
Pa	in. W.C.	L/s	CFM	L/s	CFM	L/s	CFM
25	0.1	122	258	126	260	120	254
50	0.2	114	241	115	242	111	235
75	0.3	105	223	106	225	103	218
100	0.4	98	207	99	209	94	199
125	0.5	89	189	90	190	85	180
150	0.6	81	72	82	174	76	161
175	0.7	72	152	73	154	67	142
200	0.8	63	133	64	135	58	123
225	0.9	56	119	57	121	50	106
250	1.0	48	102	48	102	42	89
275	1.1	41	87	42	88	35	74

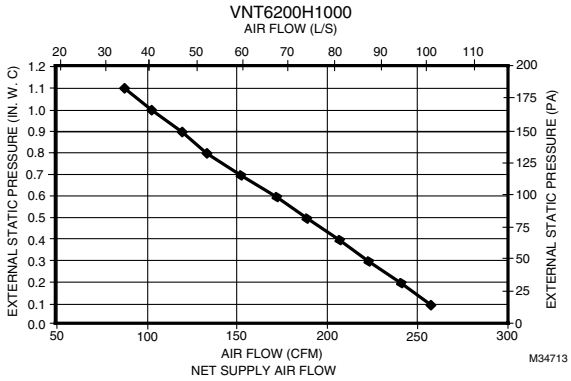

VNT6200E Energy Performance

VNT6200H1000 Energy Performance

	SUPPLY TEMPERATURE		NET SUPPLY AIR FLOW		AVERAGE POWER	SENSIBLE RECOVERY	APPARENT SENSIBLE
	°C	°F	L/s	CFM	Watts	Efficiency %	Effectiveness %
HEATING	0	32	29	61	62	78	90
	0	32	43	91	74	76	85
	0	32	60	127	92	73	80
	-25	-13	31	66	59	66	88

M34716

Residential Ventilation Replacement Filters

Material Number	Description	Used With
50053952-005/U	Replacement Filter Kit VNT5150 (Kit quantity 2)	VNT5150
50053952-006/U	Replacement Filter Kit VNT5200 (Kit quantity 2)	VNT5200

Residential Ventilation Accessories and Replacement Parts

Material Number	Description	Used With
50048694-001/U	Door Latch, for HR150B, HR200B, ER150B, ER200B, ER150C	ER150B; ER150C; ER200B; ER200C; HR150B; HR200B
50048918-001/U	ERV Replacement core for ER150 and ER200 models	ER150B; ER150C; ER200B; ER200C
50050728-001/U	Foam Prefilter, Set of 2	ER150B; ER150C; ER200B; ER200C; HR150B; HR200B
50050832-001/U	Electronic Control Kit	ER150B; ER150C; ER200B; ER200C; HR150B; HR200B
50053952-001/U	Polypropylene 10 inch HRV Core for VNT5150H1000	VNT5150H1000
50053952-002/U	Polypropylene 15 inch HRV Core for VNT5200H1000	VNT5200H1000
50053952-003/U	Enthalpy 10 inch ERV Core for VNT5150E1000	VNT5150E1000
50053952-004/U	Enthalpy 15 inch ERV Core for VNT5200E1000	VNT5200E1000
50053952-010/U	Replacement Motor	VNT5150, VNT5200
50053952-012/U	Replacement low voltage control electronic board	VNT5150, VNT5200
50053952-013/U	Replacement high voltage control electronic board	VNT5070, VNT5150, VNT5200
50053952-015/U	Front Access Door	VNT5150, VNT5200
50053952-020/U	20-40-60 Minute Boost Control	VNT5150, VNT5200
50063805-001/U	Polypropylene 9 inch HRV Core for VNT5070H1000	VNT5070H1000
50063805-002/U	Enthalpy 9 inch ERV Core for VNT5070E1000	VNT5070E1000
50063805-004/U	Replacement Motor	VNT5070
50063805-005/U	5 inch diameter Plastic Collar	VNT5070
50063805-006/U	5 inch diameter Plastic Keeper	VNT5070
50063805-007/U	Front Access Door	VNT5070
50063805-008/U	Mounting Bracket	VNT5070
50063805-009/U	Matrix Ventilation Hood	VNT5070
50063805-010/U	Replacement low voltage control electronic board	VNT5070
VNT6150XALPLT1/U	Aluminum distribution plates, 150 cfm	VNT6150
VNT6150XIMPEL1/U	Motor 180mm impeller, 150 cfm	VNT6150
VNT6150XLVCBD1/U	Low voltage control board, 150 cfm	VNT6150
VNT6200XALPLT1/U	Aluminum distribution plates, 200 cfm	VNT6200
VNT6200XLVCBD1/U	Low voltage control board, 200 cfm	VNT6200

Y8150 Fresh Air Ventilation Kit

The Y8150 Fresh Air Ventilation System from Honeywell provides optimal ventilation for improved indoor air quality at an affordable price for a home. A "set it and forget it" program calculates the amount of ventilation needed in the home based on custom settings. The control operates a fresh air intake damper and, when necessary, activates the main HVAC blower to efficiently meet ASHRAE ventilation rates.

- Designed to help meet local ventilation codes and standards, including ASHRAE 62.2-2010 standard, Ventilation and Acceptable Indoor Air Quality in Low-Rise Residential Buildings.
- Smart Control optimizes air delivery by syncing ventilation calls with heating/cooling
- Easy-to-use input dials allow customized ventilation for each installation
- Test mode that includes immediate feedback to installer to confirm that air delivery requirements of selected ventilation standard are being met.
- Economical supply-only ventilation; works with forced air system.
- Can be used with other equipment, such as an HRV/ ERV, for balanced ventilation.

Electrical Ratings: 24 Vac
Tradeline Value: Tradeline
Includes: W8150A Fresh Air Ventilation Control, EARDTZ6 normally closed 6 inch damper, AT120B 120 Vac/24 Vac 20 VA transformer, mounting hardware for control

Material Number	Application	Airflow Capacity (cfm)	Current Draw
Y8150A1017/U	Ventilation System	50 to 160 cfm	0.6 A

Fresh Air Ventilation Control

W8150 Fresh Air Ventilation Control provides fresh air to a home. The control operates a fresh air intake damper and, when necessary, activates the main HVAC blower to efficiently meet ASHRAE ventilation rates.

- Designed to help meet local ventilation codes and standards, including ASHRAE 62.2-2010 standard, Ventilation and Acceptable Indoor Air Quality in Low-Rise Residential Buildings.
- Smart Control optimizes air delivery by syncing ventilation calls with heating/cooling
- Easy-to-use input dials allow customized ventilation for each installation.
- Test mode that includes immediate feedback to installer to confirm that air delivery requirements of selected ventilation standard are being met.
- Economical supply-only ventilation; works with forced air system.
- Can be used with other equipment, such as an HRV/ ERV, for balanced ventilation.

Electrical Ratings: 24 Vac
Tradeline Value: Tradeline

Material Number	Application	Airflow Capacity (cfm)	Current Draw	Used With
W8150A1001/U	Ventilation Control	50 to 160 cfm	0.6 A	EARD6,VNT5150,VNT5200,VNT5070

Digital Bath Fan Control

Every home can benefit from proper ventilation. Honeywell's new Digital Bath Fan Control can operate a bath fan to meet ASHRAE 62.2 ventilation standards, allowing you to offer increased ventilation control that is smart, affordable and efficient.

- Installs in place of a normal switch.
- Manually turn fan on / off or program to run at certain times of day for increased energy efficiency and convenience.
- Can run in timer mode up to 60 minutes.
- Meets ASHRAE 62.2 Ventilation Standard, required or recommended in most states and provinces for new construction or whenever a permit is required.
- Easy-to-see backlit display shows current time to keep you on schedule when getting ready.

Application: Ventilation Control
Electrical Ratings: 120 Vac
Frequency: 60 Hz
Tradeline Value: Tradeline

Material Number	Description
HVC0001/U	Color White
HVC0002/U	Color Biscuit

Wireless Vent and Filter Boost Remote

The Wireless Vent and Filter Boost Remote provides one-touch control of your ventilation system from bathrooms, laundry rooms, or any location in your home or building. The remote has three buttons: 20, 40, and 60 minutes. The ventilator can be temporarily boosted for 20, 40, or 60 minutes, depending on the button pressed.

- Pressing one of these buttons temporarily boosts the ventilator for either the time on the button or the current run time at the thermostat, whichever is greater. Vent boost can be canceled from the thermostat.

Application: Ventilation Control
Tradeline Value: Tradeline

Material Number	Description
HVC20A1000/U	Wireless Vent and Filter Boost Remote works with RedLINK 2.0 thermostats

EARD TrueZONE Fresh Air Damper

The EARD is a round damper with a 24 Vac powered-open/spring-closed motor. It is used for fresh air intake for ventilation or for combustion makeup air.

- Adjustable damper position range stops.
- Single-blade damper.
- Shipped as power open/spring return closed damper.
- Galvanized steel.
- Quiet operation.
- Can be field-converted to power closed/spring return open damper.
- Blade closes off tightly against gasket for minimal leakage.
- Male (crimped) and female (uncrimped) ends to connect to any rigid or flexible round duct.

Shape: Round
Used With: Honeywell Ventilation Systems
Motor Timing: 30 seconds power closed/10 seconds spring return
Voltage: 24V

Wires to Motor: Terminals: M1-Power; M6 Common
Other Motor Information: Simplified range stops

Material Number	Application	Size	Motor or Actuator Mounting	Damper Type	Motor	Description
EARD6TZ/U	Zone Damper	6 in. diameter (152 mm diameter)	Side or Top	Single-blade, round	Power open, spring closed	6 in. Round Fresh Air Damper, Spring Return
EARD8TZ/U	Ventilation Damper	8 in. diameter (203 mm diameter)	Side or Top	Single-blade, round	Power open, spring closed	8 in. Round Fresh Air Damper

V400 Line Voltage; V800 Low Voltage Standing Pilot Gas Controls

Used on gas fired standing pilot appliances with 30 mV thermocouple. These gas controls include a manual gas valve, safety shutoff, single millivoltage automatic operator, pressure regulator, pilot gas filter and flow adjustment, pressure tapping, and thermocouple connector.

- Include pilot flow adjustment screw.
- Easy to install, adjust and service; all adjustments and connections are accessible from top of control.
- Add separate energy cutoff (ECO) where codes call for dual safety shutoff.
- Complete safety shutoff on pilot flame failure.
- LITE-RITE (OFF-PILOT-ON) lighting sequence.

Ignition Type: Standing Pilot
Application: Single Stage
Type of Fuel: Natural (LP if conversion kit included)
Body Pattern: Straight-through
Pilot Gas Outlet: Compression fitting for 1/4 in. OD tubing
Pressure Tapping: Outlet pressure tap: 1/8 in. NPT with plug
Capacity (kBtuh):
1/2 x 1/2 inlet x outlet – 225,000 BTU/hr 1 in. PD; 23,000 BTU/hr minimum; 225,000 BTU/hr maximum
1/2 x 3/4 inlet x outlet – 250,000 BTU/hr 1 in. PD; 23,000 BTU/hr minimum; 290,000 BTU/hr maximum
3/4 x 3/4 inlet x outlet – 335,000 BTU/hr 1 in. PD; 34,000 BTU/hr minimum; 425,000 BTU/hr maximum
Pressure Ratings (psi): 1/2 psi
Pressure Ratings (kPa): 3.5 kPa
Frequency: 60 Hz
Operating Temperature Range: 32°F to 175°F (0°C to 79°C)

Mounting: 0 to 90 degrees in any direction from the upright position of the gas control knob, including vertically.
Approvals, Underwriters Laboratories Inc.: UL Component Recognized MCCZ2.MH5323
Approvals, CSA: CSA International: 112395

Accessories:
390427A/U – One 3/4 x 1/2 in. reducer bushing
390427B/U – One 1/2 inch x 3/8 inch reducer bushing
390427E/U – Two 3/4 x 1/2 in. reducer bushings
390795/U – Remote Gas Cock Knob
391936/U – Single Stage LP to Natural Gas Conversion Kit. 3" to 5" adjustment range. Includes regulator spring, o-ring, screw and cap
391937/U – Single Stage Natural to LP Gas Conversion Kit. 8" to 12" adjustment range. Includes regulator spring, o-ring, screw and cap
392451-1/U – ECO adapter with 1/4" x 0.032" quick-connect terminals for the V800 or the VS820 family.

Material Number	Voltage	Opening Characteristics	Inlet/Outlet Size (in.)	Pressure Regulator Setpoint (in. wc)	Pressure Regulator Setpoint (kPa)	Electrical Connections	Includes	Comments
V400A1095/U	120 Vac	Standard	3/4 in. NPT x 3/4 in. NPT with 1/2 in. NPT side outlets	3.5 in. WC	0.87 kPa	39" Leadwires with Conduit Cover	One 1/2 x 3/8 in. reducer bushing Two 3/4 x 1/2 in. reducer bushings	–
V800A1070/U	24 Vac	Standard	1/2 in. NPT x 3/4 in. NPT with 1/2 in. NPT side outlets	3.5 in. WC	0.87 kPa	Combination screw and 1/4 in. male quick connects.	One 1/2 x 3/8 in. reducer bushing One 3/4 x 1/2 in. reducer bushing Natural to LP Conversion Kit Q340 Thermocouple	–
V800A1088/U	24 Vac	Standard	3/4 in. NPT x 3/4 in. NPT with 1/2 in. NPT side outlets	3.5 in. WC	0.87 kPa	Combination screw and 1/4 in. male quick connects.	One 1/2 x 3/8 in. reducer bushing Two 3/4 x 1/2 in. reducer bushings Natural to LP Conversion Kit Q340 Thermocouple	–
V800A1161/U	24 Vac	Standard	1/2 in. x 1/2 in.	3.5 in. WC	0.87 kPa	Combination screw and 1/4 in. male quick connects.	–	Available in Canada only
V800A1179/U	24 Vac	Standard	3/4 in. x 3/4 in.	3.5 in. WC	0.87 kPa	Combination screw and 1/4 in. male quick connects.	–	Available in Canada only
V800A1476/U	24 Vac	Standard	1/2 in. x 3/4 in.	3.5 in. WC	0.87 kPa	Combination screw and 1/4 in. male quick connects.	One 3/4 x 1/2 in. reducer bushing Natural to LP Conversion Kit	–
V800A1591/U	24 Vac	Standard	3/4 in. x 3/4 in.	3.5 in. WC	0.87 kPa	Combination screw and 1/4 in. male quick connects.	Two 3/4 x 1/2 in. reducer bushings Natural to LP Conversion Kit	–
V800C1052/U	24 Vac	Step	3/4 in. NPT x 3/4 in. NPT with 1/2 in. NPT side outlets	Step Setting: 0.9 in. WC non-adjustable; Full Rate: 3.5 in. wc	Step Setting: 0.22 kPa; Full Rate: 0.87 kPa	Combination screw and 1/4 in. male quick connects.	One 1/2 x 3/8 in. reducer bushing Two 3/4 x 1/2 in. reducer bushings	–

Combination Gas Controls

Dimensions in inches (millimeters)

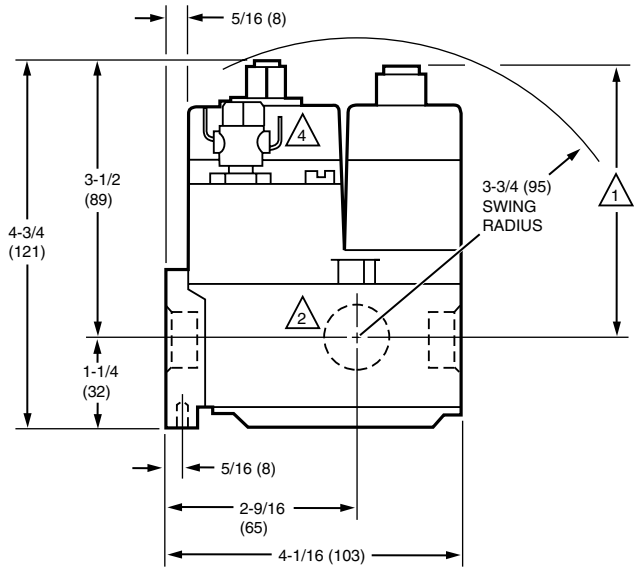

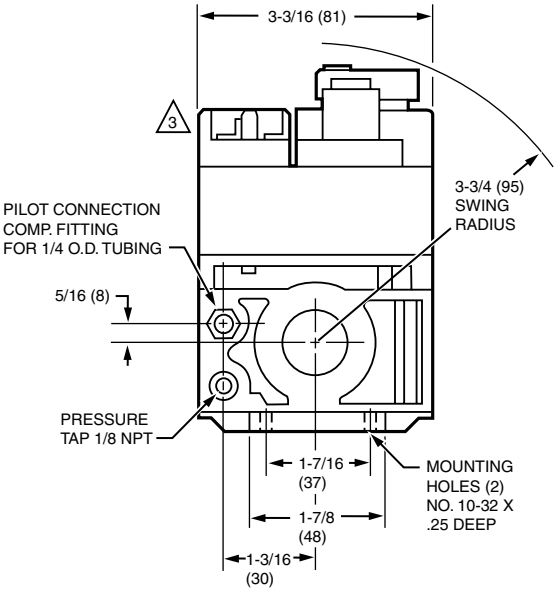

1 WITH V5306 (ILLUSTRATED), V5307 OR 5390 PRESSURE REGULATOR: 24V MODELS–3-1/2 (89), 120V MODEL–3-5/8 (92) MANUAL MODELS–2-13/16 (71), FOR V5308 ADD 5/8 (16) TO DIMENSIONS GIVEN.

2 SIDE OUTLETS–LEFT AND RIGHT HAND. STANDARD ONLY ON TRADELINE MODELS.

3 CONTROL WITH 24V VALVE OPERATOR SHOWN. LINE VOLT MODEL HAS COVER FOR CONDUIT CONNECTION (TOP SURFACE).

M16547A

4 ECO CONNECTOR ON STANDARD CAPACITY V800 ONLY.

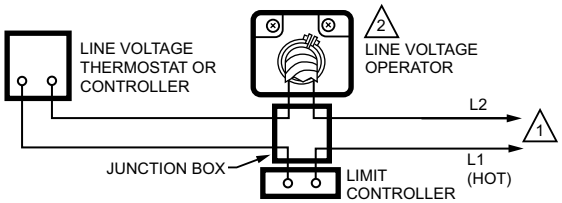

1 POWER SUPPLY. PROVIDE DISCONNECT MEANS AND OVERLOAD PROTECTION AS REQUIRED.

2 LINE VOLTAGE ENCLOSURE NOT PART OF GAS CONTROL. LINE VOLTAGE GAS CONTROLS MUST BE USED IN AN OEM APPROVED ENCLOSURE.

M23300

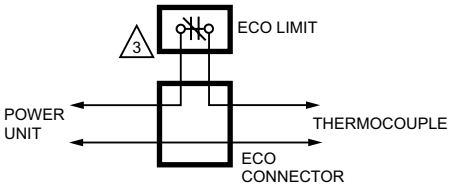

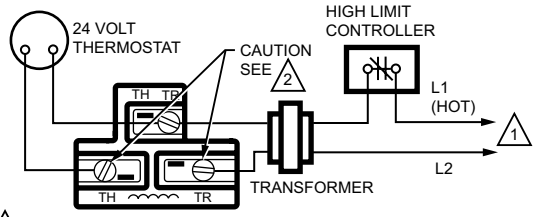

1 POWER SUPPLY. PROVIDE DISCONNECT MEANS AND OVERLOAD PROTECTION AS REQUIRED.

2 NEVER JUMPER THESE TERMINALS. THIS SHORTS OUT VALVE COIL AND MAY BURN OUT HEAT ANTICIPATOR IN THERMOSTAT.

3 ORDER ECO LIMIT AND LEADWIRES SEPERATELY.

M23299

VS820 Millivoltage Standing Pilot Gas Controls

These gas controls are used on gas fired, standing pilot appliances with 750 mV self-powered control systems. They include a manual gas valve, safety shutoff, single millivoltage automatic operator and pressure regulator.

- Include pilot flow adjustment screw.
- Easy to install, adjust and service; all adjustments and connections are accessible from top of control.
- Add separate energy cutoff (ECO) where codes call for dual safety shutoff.
- Complete safety shutoff on pilot flame failure.
- LITE-RITE (OFF-PILOT-ON) lighting sequence.

Ignition Type: Standing Pilot
Application: Self-powered automatic control. Use with 750 mV pilot generator.
Pilot Gas Outlet: Compression fitting for 1/4 in. OD tubing.
Pressure Tapping: Outlet pressure tap: 1/8 in. NPT with plug
Body Pattern: Straight-through
Capacity (kBtuh):
1/2 x 1/2 inlet x outlet – 225,000 BTU/hr 1 in. PD; 23,000 BTU/hr minimum; 225,000 BTU/hr maximum
1/2 x 3/4 inlet x outlet – 250,000 BTU/hr 1 in. PD; 23,000 BTU/hr minimum; 290,000 BTU/hr maximum
3/4 x 3/4 inlet x outlet – 335,000 BTU/hr 1 in. PD; 34,000 BTU/hr minimum; 425,000 BTU/hr maximum
Pressure Ratings (psi): 1/2 psi
Pressure Ratings (kPa): 3.5 kPa
Mounting: 0 to 90 degrees in any direction from the upright position of the gas control knob, including vertically.
Voltage: 750 mV
Electrcial Connections: Combination screw and 1/4 in. male quick connects.

Operating Temperature Range: VS820M models only -40°F to 175°F; All others 32°F to 175°F (VS820M models only -40°C to +79°C; All others 0°C to 79°C)
Approvals, Underwriters Laboratories Inc.: UL Component Recognized MCCZ2.MH5323
Approvals, CSA: CSA International: 112395

Accessories:
390427A/U – One 3/4 x 1/2 in. reducer bushing
390427B/U – One 1/2 inch x 3/8 inch reducer bushing
390427E/U – Two 3/4 x 1/2 in. reducer bushings
390795/U – Remote Gas Cock Knob
391936/U – Single Stage LP to Natural Gas Conversion Kit. 3" to 5" adjustment range. Includes regulator spring, o-ring, screw and cap
391937/U – Single Stage Natural to LP Gas Conversion Kit. 8" to 12" adjustment range. Includes regulator spring, o-ring, screw and cap
392451-1/U – ECO adapter with 1/4" x 0.032" quick-connect terminals for the V800 or the VS820 family.

	Material Number	Type of Fuel	Opening Characteristics	Inlet/Outlet Size (in.)	Pressure Regulator Setpoint (in. wc)	Pressure Regulator Setpoint (kPa)	Includes
	VS820A1047/U	Natural	Standard	1/2 in. NPT x 3/4 in. NPT with 1/2 in. NPT side outlets	3.5 in. WC	0.87 kPa	One 1/2 x 3/8 in. reducer bushing One 3/4 x 1/2 in. reducer bushing
	VS820A1054/U	Natural	Standard	3/4 in. NPT x 3/4 in. NPT with 1/2 in. NPT side outlets	3.5 in. WC	0.87 kPa	One 1/2 x 3/8 in. reducer bushing Two 3/4 x 1/2 in. reducer bushings
	VS820A1088/U	Natural (LP with included conversion kit)	Standard	3/4 in. NPT x 3/4 in. NPT with 1/2 in. NPT side outlets	3.5 in. WC	0.87 kPa	One 1/2 x 3/8 in. reducer bushing Two 3/4 x 1/2 in. reducer bushings Natural to LP Conversion Kit Remote rod adapter
	VS820A1187/U	Natural	Standard	1/2 in. NPT x 1/2 in. NPT	3.5 in. WC	0.87 kPa	–
	VS820A1336/U	LP	Standard	3/4 in. NPT x 3/4 in. NPT with 1/2 in. NPT side outlets	10.0 in. WC	2.49 kPa	One 1/2 x 3/8 in. reducer bushing One 3/4 x 1/2 in. reducer bushing
	VS820C1100/U	Natural	Step	3/4 in. NPT x 3/4 in. NPT with 1/2 in. NPT side outlets	Step: 0.9 in. WC non-adjustable; Full rate: 3.5 in. WC	Step: 0.22 kPa; Full rate: 0.87 kPa	One 1/2 x 3/8 in. reducer bushing One 3/4 x 1/2 in. reducer bushing
	VS820C1332/U	LP	Step	3/4 in. NPT x 3/4 in. NPT	Step: 2.2 in. WC non-adjustable; Full rate: 11.0 in. WC	Step: 0.56 kPa; Full rate: 2.73 kPa	–
U	VS820M1309/U	Natural (LP with included conversion kit)	Standard	3/4 in. NPT x 3/4 in. NPT with 1/2 in. NPT side outlets	3.5 in. WC	0.87 kPa	One 1/2 x 3/8 in. reducer bushing Two 3/4 x 1/2 in. reducer bushings Natural to LP Conversion Kit Remote rod adapter

U Universal Service Part

Combination Gas Controls

Dimensions in inches (millimeters)

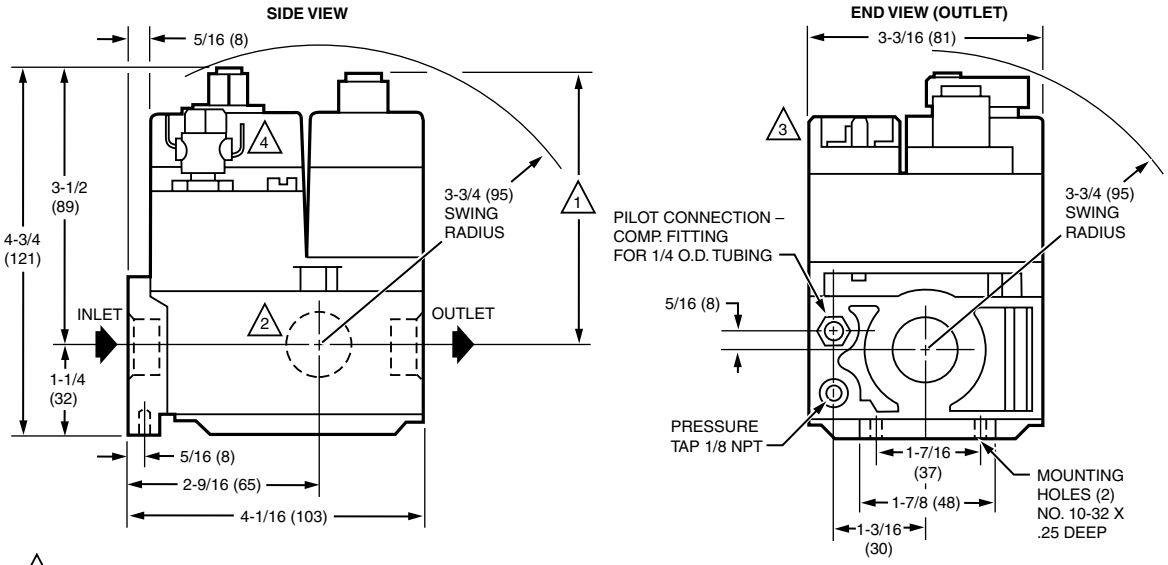

1 WITH V5306 (ILLUSTRATED), V5307 OR V8305 PRESSURE REGULATOR: 24V MODELS–3-1/2 (89), 120V MODEL–3-5/8 (92) MANUAL MODELS–2-13/16 (71), FOR V5308 ADD 5/8 (16) TO DIMENSIONS GIVEN.

2 SIDE OUTLETS–LEFT AND RIGHT HAND. STANDARD ONLY ON TRADELINE MODELS.

3 CONTROL WITH 24V VALVE OPERATOR SHOWN. LINE VOLT MODEL HAS COVER FOR CONDUIT CONNECTION (TOP SURFACE).

4 ECO CONNECTOR AVAILABLE FOR STANDARD CAPACITY V800 ONLY.

M23262

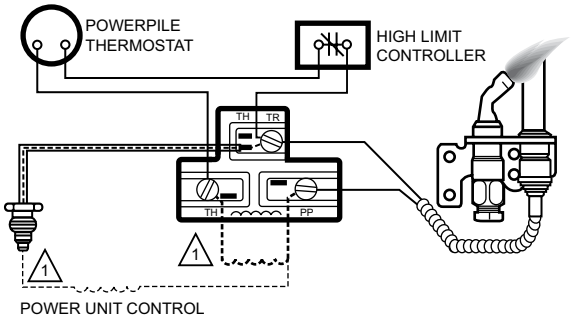

1 POWERPILE OPERATOR COIL (INTERNAL WIRING).

M23301

VR8200 Low Voltage

Gas valves for use in 24 Vac, gas-fired, standing pilot appliances with capacities from 20 to 200 cfh.

- Gas valves include manual valve, two automatic operators, servo pressure regulator and pilot adjustment.
- Compact size.
- Provide two automatic valves.
- Solenoid-operated first automatic valve opens on thermostat call for heat; closes when call for heat ends.
- Diaphragm-operated second automatic valve opens under control of regulator; closes if gas or power supply is interrupted.
- Meet codes requiring dual safety shutoff.
- Natural to LP and LP to Natural conversion kits available for standard and slow opening gas valves.
- LITE-RITE (OFF-PILOT-ON) lighting sequence.
- All adjustments, wiring connections and pilot outlet are accessible from top of control.
- Adjustable servo regulator effectively maintains almost constant gas output pressure under wide fluctuations in gas supply pressure.
- Compatible with ECO connector.

Ignition Type: Standing Pilot
Application: Single Stage
Type of Fuel: Natural (LP if conversion kit included)
Body Pattern: Straight-through
Electrical Connections: 1/4 in. quick-connect male terminals
Pilot Gas Outlet: Compression fitting for 1/4 in. OD tubing
Pressure Tapping: 1/8 in. NPT with plug
Capacity (kBtuh): At 1 in. wc p.d. – 130,000 BTUh: 20,000 BTUh minimum: 200,000 BTUh maximum Natural Gas
Pressure Ratings (psi): 1/2 psi
Pressure Ratings (kPa): 3.5 kPa
Operating Temperature Range: 0°F to 175°F (-18°C to +79°C)
Mounting: 0 to 90 degrees in any direction from the upright position of the gas control knob, including vertically.
Approvals, Underwriters Laboratories Inc.: UL Component Recognized MCCZ2.MH5323
Approvals, CSA: CSA International: 112395
Approvals, Australian Gas Association: 4752

Accessories:
390427A/U – One 3/4 x 1/2 in. reducer bushing
390427B/U – One 1/2 inch x 3/8 inch reducer bushing
390427E/U – Two 3/4 x 1/2 in. reducer bushings
393200-1/U – ECO adapter with 1/4" x 0.032" quick-connect terminals for VR8200 and VR8300 family.
393690-13/U – 1/2" NPT Elbow Flange kit includes flange, o-rings and hex screws
393690-4/U – 3/4" NPT Straight Flange kit includes flange, o-rings and hex screws
393691/U – Single Stage Natural to LP Gas Conversion Kit. 8" to 12" adjustment range. Includes regulator spring, o-ring, adjustment screw and cap screw
394588/U – Single Stage LP to Natural Gas Conversion Kit. 3" to 5" adjustment range. Includes regulator spring, o-ring, adjustment screw and cap screw
395253-1/U – Single Stage LP to Natural Gas Conversion Kit. 5" to 7" WC adjustment. Includes regulator spring, o-ring, and adjustment screw and cap screw
396221/U – Single Stage Natural to LP Gas Conversion Kit. 8" to 12" adjustment range. Includes regulator spring, o-ring, and adjustment screw. Reuse existing cap screw.
396222/U – Single Stage LP to Natural Gas Conversion Kit. 3" to 5" adjustment range. Includes regulator spring, o-ring, and adjustment screw. Reuse existing cap screw.

Material Number	Voltage	Frequency	Opening Characteristics	Inlet/Outlet Size (in.)	Pressure Regulator Setpoint (in. wc)	Pressure Regulator Setpoint (kPa)	Includes
VR8200A2124/U	24 Vac	60 Hz	Standard	1/2 in. x 1/2 in.	3.5 in. WC	0.87 kPa	One 3/4 in. straight flange One 1/2 x 3/8 in. reducer bushing Natural to LP conversion kit Q340 Thermocouple
VR8200A2132/U	24 Vac	60 Hz	Standard	1/2 in. x 1/2 in.	3.5 in. WC	0.87 kPa	One 3/4 in. straight flange One 1/2 x 3/8 in. reducer bushing Natural to LP conversion kit
VR8200A2322/U	24 Vac	60 Hz	Standard	1/2 in. x 1/2 in.	3.5 in. WC	0.87 kPa	Natural to LP Conversion Kit
VR8200A2744/U	24 Vac	60 Hz	Standard	1/2 in. x 1/2 in.	3.5 in. WC	0.87 kPa	One 3/4 in. straight flange One 3/4 in. elbow flange One 1/2 x 3/8 in. reducer bushing Natural to LP conversion kit
VR8200C1041/U	24 Vac	60 Hz	Step	1/2 in. x 1/2 in.	Step Setting: 0.9 in. WC non-adjustable; Full Rate: 3.5 in. wc	Step Setting: 0.22 kPa; Full Rate: 0.87 kPa	–
VR8200H1236/U	24 Vac	60 Hz	Slow	1/2 in. x 1/2 in.	3.5 in. WC	0.87 kPa	Natural to LP Conversion Kit
VR8200H1251/U	24 Vac	60 Hz	Slow	1/2 in. x 1/2 in.	3.5 in. WC	0.87 kPa	One 3/4 in. straight flange One 1/2 x 3/8 in. reducer bushing Natural to LP conversion kit

Combination Gas Controls

Dimensions in inches (millimeters)

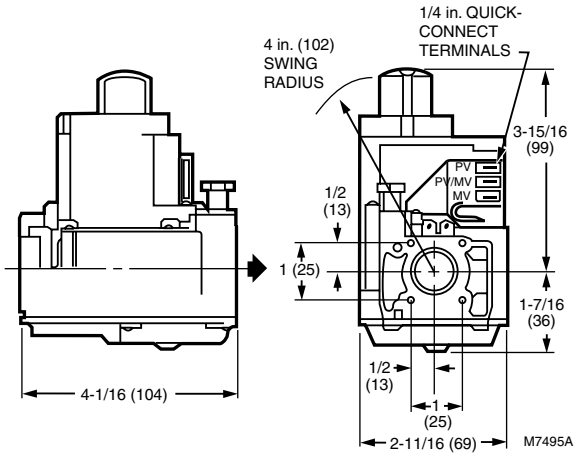

Wiring connections for 24 volt control

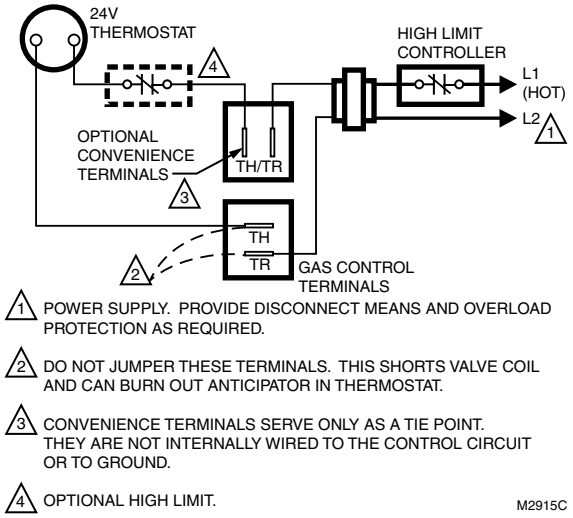

1. POWER SUPPLY. PROVIDE DISCONNECT MEANS AND OVERLOAD PROTECTION AS REQUIRED.
2. DO NOT JUMPER THESE TERMINALS. THIS SHORTS VALVE COIL AND CAN BURN OUT ANTICIPATOR IN THERMOSTAT.
3. CONVENIENCE TERMINALS SERVE ONLY AS A TIE POINT. THEY ARE NOT INTERNALLY WIRED TO THE CONTROL CIRCUIT OR TO GROUND.
4. OPTIONAL HIGH LIMIT.

VR4300 Line Voltage; VR8300 Low Voltage Standing Pilot Combination Gas Controls

Combination gas control for use in 24 Vac, 120 Vac, gas-fired, standing pilot appliances with capacities from 30 to 300 cfh.

- Control includes safety shutoff, manual valve, two automatic operators, pressure regulator and pilot adjustment.
- Compact size.
- Provides two automatic valves.
- Solenoid operated first automatic valve opens on thermostat call for heat, closes when call for heat ends.
- Diaphragm-operated second automatic valve opens under control of regulator; closes if gas or power supply is interrupted.
- Meets codes requiring dual safety shut-off.
- Natural to LP and LP to Natural conversion kits available for standard and slow opening gas valves.
- All adjustments, wiring connections and pilot outlet are accessible from top of control.
- Adjustable servo regulator effectively maintains almost constant gas output pressure under wide fluctuations in gas supply pressure.
- Compatible with ECO connector.
- LITE-RITE (OFF-PILOT-ON) lighting sequence.

Application: Single Stage
Type of Fuel: Natural (LP if conversion kit included)
Pressure Tapping: 1/8 in. NPT with plug
Pilot Gas Outlet: Compression fitting for 1/4 in. OD tubing
Body Pattern: Straight-through (with flange if included)
Capacity (kBtuh):
1/2 x 3/4 inlet x outlet – At 1 in. wc p.d. – 190,000 BTUh: 30,000 BTUh minimum: 290,000 BTUh maximum Natural Gas
3/4 x 3/4 inlet x outlet – At 1 in. wc p.d. – 200,000 BTUh: 30,000 BTUh minimum: 300,000 BTUh maximum Natural Gas
Mounting: 0 to 90 degrees in any direction from the upright position of the gas control knob, including vertically.
Operating Temperature Range: 0°F to 175°F (-18°C to +79°C); VR8300M -40°F to +175°F (-40°C to +79°C)
Approvals, Underwriters Laboratories Inc.: UL Component Recognized MCCZ2.MH5323
Approvals, CSA: CSA International: 112395
Approvals, Australian Gas Association: 4717; except VR8300M models
Pressure Ratings (psi): 1/2 psi
Pressure Ratings (kPa): 3.5 kPa
Ignition Type: Standing Pilot

Accessories:
390427A/U – One 3/4 x 1/2 in. reducer bushing
390427B/U – One 1/2 inch x 3/8 inch reducer bushing
390427E/U – Two 3/4 x 1/2 in. reducer bushings
393200-1/U – ECO adapter with 1/4" x 0.032" quick-connect terminals for VR8200 and VR8300 family.
393690-13/U – 1/2" NPT Elbow Flange kit includes flange, o-rings and hex screws
393690-4/U – 3/4" NPT Straight Flange kit includes flange, o-rings and hex screws
393691/U – Single Stage Natural to LP Gas Conversion Kit. 8" to 12" adjustment range. Includes regulator spring, o-ring, adjustment screw and cap screw
394588/U – Single Stage LP to Natural Gas Conversion Kit. 3" to 5" adjustment range. Includes regulator spring, o-ring, adjustment screw and cap screw
395253-1/U – Single Stage LP to Natural Gas Conversion Kit. 5" to 7" WC adjustment. Includes regulator spring, o-ring, and adjustment screw and cap screw
396221/U – Single Stage Natural to LP Gas Conversion Kit. 8" to 12" adjustment range. Includes regulator spring, o-ring, and adjustment screw. Reuse existing cap screw.
396222/U – Single Stage LP to Natural Gas Conversion Kit. 3" to 5" adjustment range. Includes regulator spring, o-ring, and adjustment screw. Reuse existing cap screw.

	Material Number	Voltage	Frequency	Opening Characteristics	Inlet/Outlet Size (in.)	Pressure Regulator Setpoint (in. wc)	Pressure Regulator Setpoint (kPa)	Electrical Connections	Includes
	VR4300A4502/U	120 Vac	60 Hz	Standard	3/4 in. straight flange on inlet x 3/4 in.	3.5 in. WC	0.87 kPa	21 in. (533 mm) leadwire.	One 1/2 x 3/8 in. reducer bushing Two 3/4 x 1/2 in. reducer bushings Natural to LP Conversion Kit
	VR8300A3500/U	24 Vac	60 Hz	Standard	1/2 in. x 3/4 in.	3.5 in. WC	0.87 kPa	1/4 in. quick-connect male terminals	One 3/4 x 1/2 in. reducer bushing Natural to LP Conversion Kit
	VR8300A3518/U	24 Vac	60 Hz	Standard	1/2 in. x 3/4 in.	3.5 in. WC	0.87 kPa	1/4 in. quick-connect male terminals	One 3/4 in. straight flange One 3/4 x 1/2 in. reducer bushing Natural to LP Conversion Kit Q340 Thermocouple ECO Adaptor
	VR8300A4508/U	24 Vac	60 Hz	Standard	3/4 in. straight flange on inlet x 3/4 in.	3.5 in. WC	0.87 kPa	1/4 in. quick-connect male terminals	Two 3/4 x 1/2 in. reducer bushings Natural to LP conversion kit
	VR8300A4516/U	24 Vac	60 Hz	Standard	3/4 in. straight flange on inlet x 3/4 in.	3.5 in. WC	0.87 kPa	1/4 in. quick-connect male terminals	Two 3/4 x 1/2 in. reducer bushings Natural to LP conversion kit Q340 Thermocouple ECO adaptor
	VR8300C4506/U	24 Vac	60 Hz	Step	3/4 in. straight flange on inlet x 3/4 in.	Step Setting: 0.9 in. WC non-adjustable; Full Rate: 3.5 in. wc	Full Rate: 0.87 kPa; Step Setting: 0.22 kPa	1/4 in. quick-connect male terminals	Two 3/4 x 1/2 in. reducer bushings
	VR8300H4501/U	24 Vac	60 Hz	Slow	3/4 in. straight flange on inlet x 3/4 in.	3.5 in. WC	0.87 kPa	1/4 in. quick-connect male terminals	–
U	VR8300M4406/U	24 Vac	50 Hz; 60 Hz	Standard	3/4 in. x 3/4 in.	3.5 in. WC	0.87 kPa	1/4 in. quick-connect male terminals	Two 3/4 x 1/2 in. reducer bushings Natural to LP Conversion Kit
U Universal Service Part									

Combination Gas Controls

Dimensions in inches (millimeters)

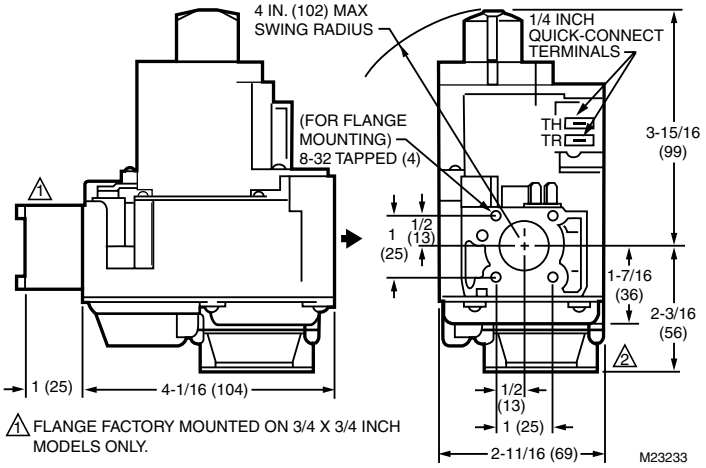

1 FLANGE FACTORY MOUNTED ON 3/4 X 3/4 INCH MODELS ONLY.

2 STEP-OPEN MODELS ONLY.

Wiring connections for 120 volt control

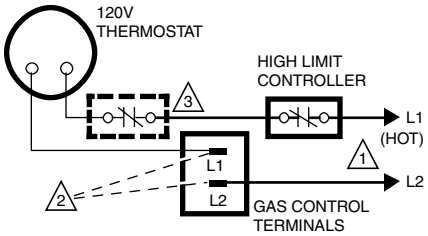

1 POWER SUPPLY. PROVIDE DISCONNECT MEANS AND OVERLOAD PROTECTION AS REQUIRED.

2 DO NOT JUMPER THESE TERMINALS. THIS SHORTS VALVE COIL AND MAY BURN OUT ANTICIPATOR IN THERMOSTAT.

3 OPTIONAL HIGH LIMIT.

M3092B

Wiring connections for 24 volt control

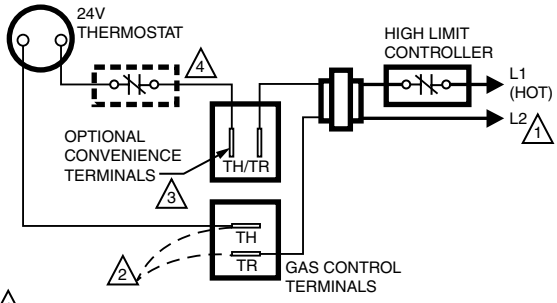

1 POWER SUPPLY. PROVIDE DISCONNECT MEANS AND OVERLOAD PROTECTION AS REQUIRED.

2 DO NOT JUMPER THESE TERMINALS. THIS SHORTS VALVE COIL AND CAN BURN OUT ANTICIPATOR IN THERMOSTAT.

3 CONVENIENCE TERMINALS SERVE ONLY AS A TIE POINT. THEY ARE NOT INTERNALLY WIRED TO THE CONTROL CIRCUIT OR TO GROUND.

4 OPTIONAL HIGH LIMIT.

M2915C

VR8204 Intermittent Pilot Dual Automatic Valve Combination Gas Controls

Gas valves for use in 24 Vac, gas-fired, intermittent pilot appliances with capacities from 20 to 200 cfh.

- Gas valves include manual valve, two automatic operators, servo pressure regulator and pilot adjustment.
- Use with S86F, H; S8600F, H and S8610 Control Modules.
- Compact size.
- Provide two automatic valves.
- Solenoid operated first automatic valve opens on thermostat call for heat; closes when call for heat ends.
- Diaphragm operated second automatic valve opens under control of regulator; closes if gas or power supply is interrupted.
- Meet codes requiring dual safety shutoff.
- Natural to LP and LP to Natural conversion kits available for standard and slow opening gas valves.
- All adjustments and wiring connections are accessible from top of control.
- ON-OFF lighting sequence.

Ignition Type: Intermittent Pilot
Application: Single Stage
Voltage: 24 Vac
Frequency: 60 Hz
Type of Fuel: Natural (LP if conversion kit included)
Body Pattern: Straight-through
Electrical Connections: 1/4 in. quick-connect male terminals
Pilot Gas Outlet: Compression fitting for 1/4 in. OD tubing
Pressure Tapping: 1/8 in. NPT with plug
Capacity (kBtuh): At 1 in. wc p.d. – 150,000 BTUh: 20,000 BTUh minimum: 200,000 BTUh maximum Natural Gas
Pressure Ratings (psi): 1/2 psi
Pressure Ratings (kPa): 3.5 kPa
Mounting: 0 to 90 degrees in any direction from the upright position of the gas control knob, including vertically.
Approvals, Underwriters Laboratories Inc.: UL Component Recognized MCCZ2.MH5323
Approvals, CSA: CSA International: 112395
Approvals, Australian Gas Association: 4752

Accessories:
390427A/U – One 3/4 x 1/2 in. reducer bushing
390427B/U – One 1/2 inch x 3/8 inch reducer bushing
390427E/U – Two 3/4 x 1/2 in. reducer bushings
393690-13/U – 1/2" NPT Elbow Flange kit includes flange, o-rings and hex screws
393690-4/U – 3/4" NPT Straight Flange kit includes flange, o-rings and hex screws
393691/U – Single Stage Natural to LP Gas Conversion Kit. 8" to 12" adjustment range. Includes regulator spring, o-ring, adjustment screw and cap screw
394588/U – Single Stage LP to Natural Gas Conversion Kit. 3" to 5" adjustment range. Includes regulator spring, o-ring, adjustment screw and cap screw
395253-1/U – Single Stage LP to Natural Gas Conversion Kit. 5" to 7" WC adjustment. Includes regulator spring, o-ring, adjustment screw and cap screw
396221/U – Single Stage Natural to LP Gas Conversion Kit. 8" to 12" adjustment range. Includes regulator spring, o-ring, and adjustment screw. Reuse existing cap screw.
396222/U – Single Stage LP to Natural Gas Conversion Kit. 3" to 5" adjustment range. Includes regulator spring, o-ring, and adjustment screw. Reuse existing cap screw.
396021/U – Two Stage Natural to LP Gas Conversion Kit. 8" to 11" adjustment range. Includes regulator spring, o-ring, and adjustment screw. Reuse existing cap screw.
396025/U – Two Stage LP to Natural Gas Conversion Kit. 3" to 5" adjustment range. Includes regulator spring, o-ring, and adjustment screw. Reuse existing cap screw.

Material Number	Opening Characteristics	Inlet/Outlet Size (in.)	Pressure Regulator Setpoint (in. wc)	Pressure Regulator Setpoint (kPa)	Operating Temperature Range	Includes
VR8204A2076/U	Standard	1/2 in. x 1/2 in.	3.5 in. wc	0.87 kPa	0°F to 175°F (-18°C to +79°C)	One 3/4 in. straight flange One 1/2 x 3/8 in. reducer bushing Natural to LP Conversion Kit
VR8204C1019/U	Step	1/2 in. x 1/2 in.	Step Setting: 0.9 in. WC non-adjustable; Full Rate: 3.5 in. wc	Full Rate: 0.87 kPa; Step Setting: 0.22 kPa	0°F to 175°F (-18°C to +79°C)	–
VR8204H1006/U	Slow	1/2 in. x 1/2 in.	3.5 in. wc	0.87 kPa	0°F to 175°F (-18°C to +79°C)	–
VR8204M1091/U	Standard	1/2 in. x 1/2 in.	3.5 in. wc	0.87 kPa	-40°F to +175°F (-40°C to +79°C)	One 3/4 in. straight flange One 1/2 x 3/8 in. reducer bushing Natural to LP Conversion Kit

Dimensions in inches (millimeters)

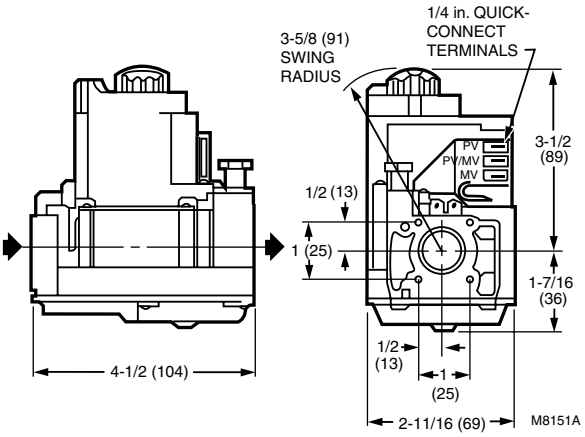

Wiring connections for 24 volt control in intermittent ignition system with S8600.

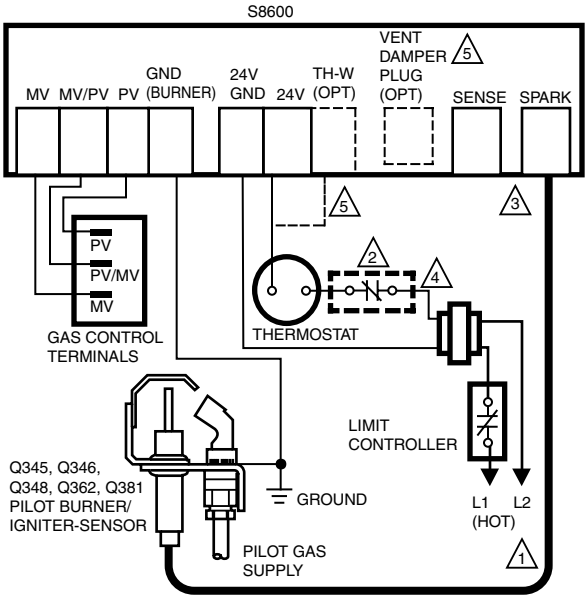

1. POWER SUPPLY. PROVIDE DISCONNECT MEANS AND OVERLOAD PROTECTION AS REQUIRED.
2. ALTERNATE LIMIT CONTROLLER LOCATION.
3. MAXIMUM WIRE LENGTH 3 ft [.9 m].
4. CONTROLS IN 24V CIRCUIT MUST NOT BE IN GROUND LEG TO TRANSFORMER.
5. FOR MODULE WITH TH-W TERMINAL AND VENT DAMPER PLUG, CONNECT THERMOSTAT TO TH-W. LEAVE 24V OPEN. DO NOT REMOVE VENT DAMPER PLUG.

M9056

VR4304 Line Voltage; VR8304 Low Voltage Intermittent Pilot Combination Gas Controls

Combination gas controls for use in 24Vac and 120Vac, gas-fired intermittent pilot appliances with capacities from 30 to 415 cfh.

- Controls include safety shutoff, manual valve, two automatic operators, pressure regulator and pilot adjustment.
- Use with S86F, H; S860D; S8600F, H; S8610 and S90A, B Control Modules.
- Compact size.
- Provide two automatic valves.
- Solenoid operated first automatic valve opens on thermostat call for heat; closes when call for heat ends.
- Diaphragm-operated second automatic valve opens under control of regulator; closes if gas or power supply is interrupted.
- Meet codes requiring dual safety shutoff.
- Natural to LP and LP to Natural conversion kits available for standard and slow opening gas valves.
- All adjustments, wiring connections and pilot outlet are accessible from top of control.
- Adjustable servo regulator effectively maintains almost constant gas output pressure under wide fluctuations in gas supply pressure.
- ON-OFF lighting sequence.

Ignition Type: Intermittent Pilot
Application: Single Stage
Body Pattern: Straight-through
Electrical Connections:
24 Vac models: 1/4 in. male quick connects
120 Vac Models: 21 in. leadwires
Pilot Gas Outlet: Compression fitting for 1/4 in. OD tubing
Pressure Tapping: 1/8 in. NPT with plug
Capacity (kBtuh):
1/2 x 1/2 inlet x outlet – At 1 in. wc p.d. - 240,000 BTUh: 30,000 BTUh minimum: 340,000 BTUh maximum Natural Gas
1/2 x 3/4 inlet x outlet – At 1 in. wc p.d. - 270,000 BTUh: 30,000 BTUh minimum: 370,000 BTUh maximum Natural Gas
3/4 x 3/4 inlet x outlet – At 1 in. wc p.d. - 300,000 BTUh: 30,000 BTUh minimum: 415,000 BTUh maximum Natural Gas
Pressure Ratings (psi): 1/2 psi
Pressure Ratings (kPa): 3.5 kPa
Operating Temperature Range: -40°F to 175°F (-40°C to 79°C); VR8304H: 0°F to 175°F (-18°C to 79°C)
Mounting: 0 to 90 degrees in any direction from the upright position of the gas control knob, including vertically.
Approvals, Underwriters Laboratories Inc.: UL Component Recognized MCCZ2.MH5323
Approvals, CSA: CSA International: 112395
Approvals, Australian Gas Association: VR4304M models only - 4717

Accessories:
390427A/U – One 3/4 x 1/2 in. reducer bushing
390427B/U – One 1/2 inch x 3/8 inch reducer bushing
390427E/U – Two 3/4 x 1/2 in. reducer bushings
393690-13/U – 1/2" NPT Elbow Flange kit includes flange, o-rings and hex screws
393690-4/U – 3/4" NPT Straight Flange kit includes flange, o-rings and hex screws
393691/U – Single Stage Natural to LP Gas Conversion Kit. 8" to 12" adjustment range. Includes regulator spring, o-ring, adjustment screw and cap screw
394588/U – Single Stage LP to Natural Gas Conversion Kit. 3" to 5" adjustment range. Includes regulator spring, o-ring, adjustment screw and cap screw
395253-1/U – Single Stage LP to Natural Gas Conversion Kit. 5" to 7" WC adjustment. Includes regulator spring, o-ring, adjustment screw and cap screw
396221/U – Single Stage Natural to LP Gas Conversion Kit. 8" to 12" adjustment range. Includes regulator spring, o-ring, and adjustment screw. Reuse existing cap screw.
396222/U – Single Stage LP to Natural Gas Conversion Kit. 3" to 5" adjustment range. Includes regulator spring, o-ring, and adjustment screw. Reuse existing cap screw.
396021/U – Two Stage Natural to LP Gas Conversion Kit. 8" to 11" adjustment range. Includes regulator spring, o-ring, and adjustment screw. Reuse existing cap screw.
396025/U – Two Stage LP to Natural Gas Conversion Kit. 3" to 5" adjustment range. Includes regulator spring, o-ring, and adjustment screw. Reuse existing cap screw.

Material Number	Voltage	Frequency	Opening Characteristics	Type of Fuel	Inlet/Outlet Size (in.)	Pressure Regulator Setpoint (in. wc)	Pressure Regulator Setpoint (kPa)	Includes
VR4304M4519/U	120 Vac	60 Hz	Standard	Natural (LP with included conversion kit)	3/4 in. x 3/4 in.	3.5 in. wc	0.87 kPa	One 1/2 x 3/8 in. reducer bushing Two 3/4 x 1/2 in. reducer bushings Natural to LP Conversion Kit
VR8304H4503/U	24 Vac	60 Hz	Slow	Natural (LP with included conversion kit)	3/4 in. x 3/4 in.	3.5 in. wc	0.87 kPa	Natural to LP Conversion Kit
VR8304M2501/U	24 Vac	60 Hz	Standard	Natural (LP with included conversion kit)	1/2 in. x 1/2 in.	3.5 in. wc	0.87 kPa	Natural to LP Conversion Kit
VR8304M3509/U	24 Vac	60 Hz	Standard	Natural (LP with included conversion kit)	1/2 in. x 3/4 in.	3.5 in. wc	0.87 kPa	One 3/4 x 1/2 in. reducer bushing Natural to LP Conversion Kit
VR8304M4507/U	24 Vac	60 Hz	Standard	Natural (LP with included conversion kit)	3/4 in. x 3/4 in.	3.5 in. wc	0.87 kPa	Two 3/4 x 1/2 in. reducer bushings Natural to LP Conversion Kit
VR8304M4515/U	24 Vac	60 Hz	Standard	Natural (LP with included conversion kit)	3/4 in. x 3/4 in.	3.5 in. wc	0.87 kPa	Two 3/4 x 1/2 in. reducer bushings Natural to LP Conversion Kit

Combination Gas Controls

Material Number	Voltage	Frequency	Opening Characteristics	Type of Fuel	Inlet/Outlet Size (in.)	Pressure Regulator Setpoint (in. wc)	Pressure Regulator Setpoint (kPa)	Includes
VR8304P4330/U	24 Vac	60 Hz	Step	LP	3/4 in. x 3/4 in.	Step Setting: 2.5 in. WC non-adjustable; Full Rate: 10.0 in. wc	Full Rate: 2.49 kPa; Step Setting: 0.62 kPa	–
VR8304P4504/U	24 Vac	60 Hz	Step	Natural	3/4 in. x 3/4 in.	Step Setting: 0.9 in. WC non-adjustable; Full Rate: 3.5 in. wc	Full Rate: 0.87 kPa; Step Setting: 0.22 kPa	–

Dimensions in inches (millimeter)

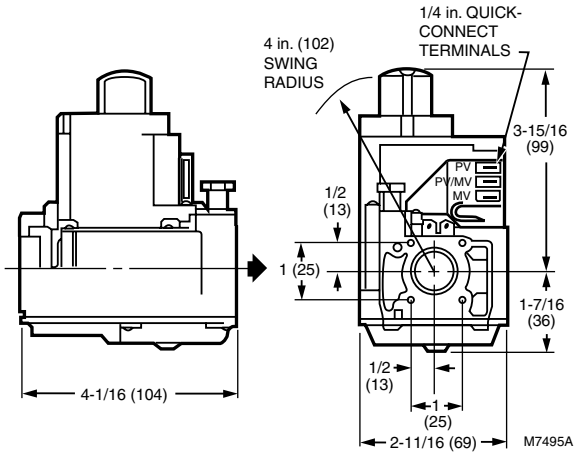

Wiring connections for 24 volt control intermittent ignition system with S8600

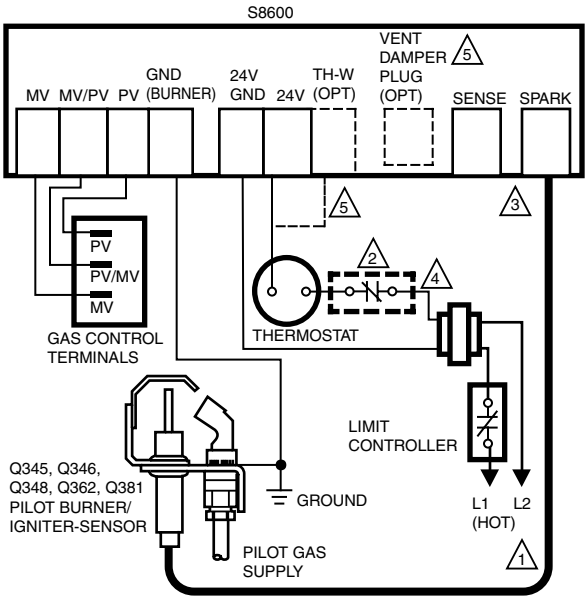

1. POWER SUPPLY. PROVIDE DISCONNECT MEANS AND OVERLOAD PROTECTION AS REQUIRED.
2. ALTERNATE LIMIT CONTROLLER LOCATION.
3. MAXIMUM WIRE LENGTH 3 ft [.9 m].
4. CONTROLS IN 24V CIRCUIT MUST NOT BE IN GROUND LEG TO TRANSFORMER.
5. FOR MODULE WITH TH-W TERMINAL AND VENT DAMPER PLUG, CONNECT THERMOSTAT TO TH-W. LEAVE 24V OPEN. DO NOT REMOVE VENT DAMPER PLUG.

M9056

VR4304 wiring connections in intermittent ignition system

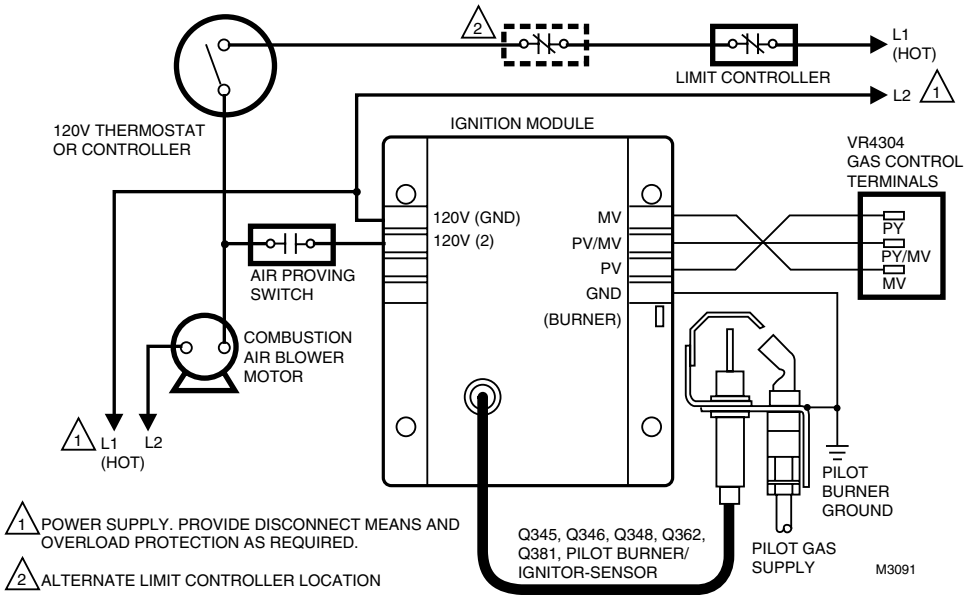

1. POWER SUPPLY. PROVIDE DISCONNECT MEANS AND OVERLOAD PROTECTION AS REQUIRED.
2. ALTERNATE LIMIT CONTROLLER LOCATION

VR8205 Direct Ignition Dual Automatic Valve Combination Gas Controls

Combination gas controls for use with hot surface/direct spark systems in 24 Vac, gas-fired appliances with capacities from 20 to 200 cfh.

- Controls include manual valve, two automatic operators, and pressure regulator.
- Provide two automatic valves.
- Solenoid operated first automatic valve opens on thermostat call for heat; closes when call for heat ends.
- Diaphragm operated second automatic valve opens under control of the regulator; closes if gas or power supply is interrupted.
- Meet codes requiring dual safety shutoff.
- Natural to LP and LP to Natural conversion kits available for standard and slow opening gas valves.
- Adjustments and wiring connections are accessible from top of the control.
- ON-OFF lighting sequence.

Ignition Type: Direct Ignition
Application: Single Stage
Voltage: 24 Vac
Frequency: 60 Hz
Type of Fuel: Natural (LP if conversion kit included)
Body Pattern: Straight-through
Electrical Connections: 1/4 in. quick-connect male terminals
Pilot Gas Outlet: None
Pressure Tapping: 1/8 in. NPT with plug
Capacity (kBtuh): At 1 in. wc p.d. – 150,000 BTUh: 20,000 BTUh minimum: 200,000 BTUh maximum Natural Gas
Pressure Ratings (psi): 1/2 psi
Pressure Ratings (kPa): 3.5 kPa
Operating Temperature Range: 0°F to 175°F (-18°C to +79°C)
Mounting: 0 to 90 degrees in any direction from the upright position of the gas control knob, including vertically.
Approvals, Underwriters Laboratories Inc.: UL Component Recognized MCCZ2.MH5323
Approvals, CSA: CSA International: 112395
Approvals, Australian Gas Association: 4752

Accessories:
390427A/U – One 3/4 x 1/2 in. reducer bushing
390427B/U – One 1/2 inch x 3/8 inch reducer bushing
390427E/U – Two 3/4 x 1/2 in. reducer bushings
393690-13/U – 1/2" NPT Elbow Flange kit includes flange, o-rings and hex screws
393690-4/U – 3/4" NPT Straight Flange kit includes flange, o-rings and hex screws
393691/U – Single Stage Natural to LP Gas Conversion Kit. 8" to 12" adjustment range. Includes regulator spring, o-ring, adjustment screw and cap screw
394588/U – Single Stage LP to Natural Gas Conversion Kit. 3" to 5" adjustment range. Includes regulator spring, o-ring, adjustment screw and cap screw
395253-1/U – Single Stage LP to Natural Gas Conversion Kit. 5" to 7" WC adjustment. Includes regulator spring, o-ring, adjustment screw and cap screw
396221/U – Single Stage Natural to LP Gas Conversion Kit. 8" to 12" adjustment range. Includes regulator spring, o-ring, and adjustment screw. Reuse existing cap screw.
396222/U – Single Stage LP to Natural Gas Conversion Kit. 3" to 5" adjustment range. Includes regulator spring, o-ring, and adjustment screw. Reuse existing cap screw.

Material Number	Opening Characteristics	Inlet/Outlet Size (in.)	Pressure Regulator Setpoint (in. wc)	Pressure Regulator Setpoint (kPa)	Includes
VR8205A2024/U	Standard	1/2 in. x 1/2 in.	3.5 in. wc	0.87 kPa	One 3/4 in. straight flange One 1/2 x 3/8 in. reducer bushing Natural to LP Conversion Kit
VR8205H1003/U	Slow	1/2 in. x 1/2 in.	3.5 in. wc	0.87 kPa	–

Dimensions in inches (millimeters)

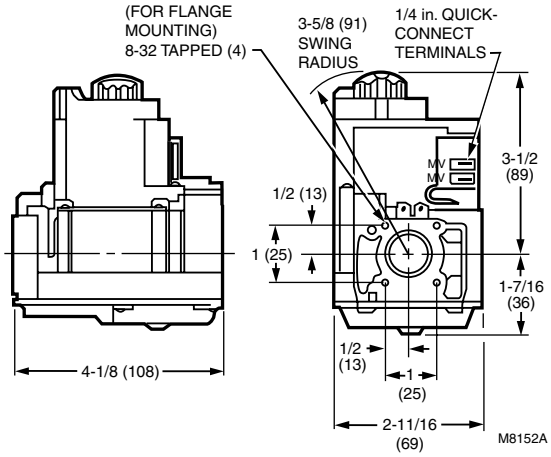

Wiring connections for 24 volt control in S87 Direct Ignition System

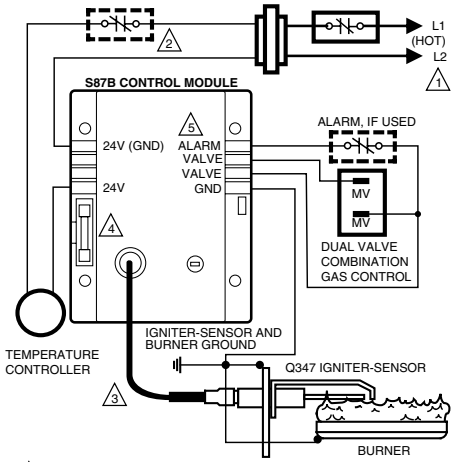

1 POWER SUPPLY. PROVIDE DISCONNECT MEANS AND OVERLOAD PROTECTION AS REQUIRED.
2 ALTERNATE LIMIT CONTROLLER LOCATION.
3 MAXIMUM IGNITER-SENSOR CABLE LENGTH: 3 ft. (0.9 m) OR LESS.
4 3A REPLACEABLE FUSE.
5 ALARM TERMINAL PROVIDED ON SOME MODELS.

VR4305 Line Voltage; VR8305 Low Voltage Direct Ignition Combination Gas Controls

Combination gas control for use with hot surface/direct spark systems in 24 Vac or 120 Vac, gas-fired appliances, with capacities from 30 to 415 cfh.

- Controls include manual valve, two automatic operators and pressure regulator.
- Provides two automatic valves.
- Solenoid operated first automatic valve opens on thermostat call for heat; closes when call for heat ends.
- Diaphragm-operated second automatic valve opens under control of regulator; closes if gas or power supply is interrupted.
- Meets codes requiring dual safety shut-off.
- Natural to LP and LP to Natural conversion kits available for standard and slow opening gas valves.
- Adjustable servo regulator effectively maintains almost constant gas output pressure under wide fluctuations in gas supply pressure.
- ON/OFF lighting sequence.
- All adjustments, wiring connections and pilot outlet are accessible from top of control.

Ignition Type: Direct Ignition
Application: Single Stage
Type of Fuel: Natural (LP if conversion kit included)
Body Pattern: Straight-through
Electrical Connections:
24 Vac Models – 1/4 in. male quick-connects
120 Vac Models – 21 in. leadwires
Pilot Gas Outlet: None
Pressure Tapping: 1/8 in. NPT with plug
Capacity (kBtuh):
1/2 x 3/4 inlet x outlet – At 1 in. wc p.d. - 270,000 BTUh: 30,000 BTUh minimum: 370,000 BTUh maximum Natural Gas
3/4 x 3/4 inlet x outlet – At 1 in. wc p.d. - 300,000 BTUh: 30,000 BTUh minimum: 415,000 BTUh maximum Natural Gas
Pressure Ratings (psi): 1/2 psi
Pressure Ratings (kPa): 3.5 kPa
Operating Temperature Range: -40°F to +175°F (-40°C to +79°C)
Mounting: 0 to 90 degrees in any direction from the upright position of the gas control knob, including vertically.
Approvals, Underwriters Laboratories Inc.: UL Component Recognized MCCZ2.MH5323
Approvals, CSA: CSA International: 112395

Accessories:
390427A/U – One 3/4 x 1/2 in. reducer bushing
390427B/U – One 1/2 inch x 3/8 inch reducer bushing
390427E/U – Two 3/4 x 1/2 in. reducer bushings
393690-13/U – 1/2" NPT Elbow Flange kit includes flange, o-rings and hex screws
393690-4/U – 3/4" NPT Straight Flange kit includes flange, o-rings and hex screws
393691/U – Single Stage Natural to LP Gas Conversion Kit. 8" to 12" adjustment range. Includes regulator spring, o-ring, adjustment screw and cap screw
394588/U – Single Stage LP to Natural Gas Conversion Kit. 3" to 5" adjustment range. Includes regulator spring, o-ring, adjustment screw and cap screw
395253-1/U – Single Stage LP to Natural Gas Conversion Kit. 5" to 7" WC adjustment. Includes regulator spring, o-ring, adjustment screw and cap screw
396221/U – Single Stage Natural to LP Gas Conversion Kit. 8" to 12" adjustment range. Includes regulator spring, o-ring, and adjustment screw. Reuse existing cap screw.
396222/U – Single Stage LP to Natural Gas Conversion Kit. 3" to 5" adjustment range. Includes regulator spring, o-ring, and adjustment screw. Reuse existing cap screw.

Material Number	Voltage	Frequency	Opening Characteristics	Inlet/Outlet Size (in.)	Pressure Regulator Setpoint (in. wc)	Pressure Regulator Setpoint (kPa)	Includes
VR4305M4532/U	120 Vac	60 Hz	Standard	3/4 in. x 3/4 in.	3.5 in. wc	0.87 kPa	One 1/2 x 3/8 in. reducer bushing Two 3/4 x 1/2 in. reducer bushings Natural to LP Conversion Kit
VR8305M3506/U	24 Vac	60 Hz	Standard	1/2 in. x 3/4 in.	3.5 in. wc	0.87 kPa	One 3/4 in. straight flange One 3/4 x 1/2 in. reducer bushing Natural to LP Conversion Kit
VR8305P4279/U	24 Vac	60 Hz	Step	3/4 in. x 3/4 in.	Step Setting: 0.9 in. WC non-adjustable; Full Rate: 3.5 in. wc	Full Rate: 0.87 kPa; Step Setting: 0.22 kPa	–

Dimensions in inches (millimeters)

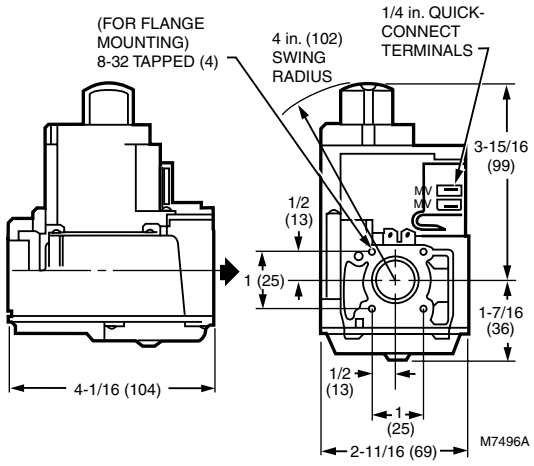

Wiring connections for 120 volt control in S87 Direct Ignition System

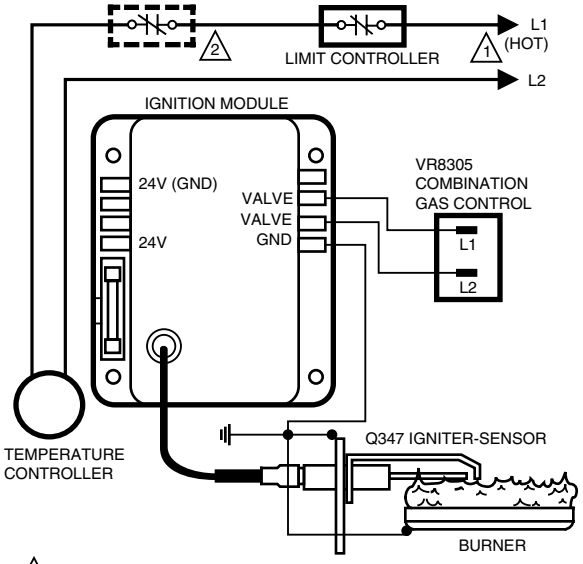

1 POWER SUPPLY. PROVIDE DISCONNECT MEANS AND OVERLOAD PROTECTION AS REQUIRED.

2 ALTERNATE LIMIT CONTROLLER LOCATION.

M3088

VR8215 Direct Ignition Dual Automatic Valve Combination Gas Controls

Combination gas controls for use with hot surface/direct spark systems in 24 Vac, gas-fired appliances with capacities from 15 to 200 cfh.

- Controls include manual valve, two automatic operators, and pressure regulator.
- Provide two automatic valves.
- Solenoid operated first automatic valve opens on thermostat call for heat; closes when call for heat ends.
- Diaphragm operated second automatic valve opens under control of the regulator; closes if gas or power supply is interrupted.
- Meet codes requiring dual safety shutoff.
- Natural to LP and LP to Natural conversion kits available for standard and slow opening gas valves.
- Adjustments and wiring connections are accessible from top of the control.
- Compact size.
- ON-OFF lighting sequence.

Ignition Type: Direct Ignition
Application: Single Stage
Voltage: 24 Vac
Frequency: 50 Hz, 60 Hz
Type of Fuel: Natural (LP with included conversion kit)
Body Pattern: Straight-through
Electrical Connections: 1/4 in. quick-connect male terminals
Pilot Gas Outlet: None
Pressure Tapping: 1/8 in. NPT with plug
Capacity (kBtuh): At 1 in. wc p.d. – 150,000 BTUh: 15,000 BTUh minimum: 200,000 BTUh maximum Natural Gas
Pressure Ratings (psi): 1/2 psi
Pressure Ratings (kPa): 3.5 kPa
Operating Temperature Range: -40°F to +175°F (-40°C to +79°C)
Approximate, Dimensions: 3.38 inches high x 4.44 inches wide x 2.70 inches deep (113 mm long x 86 inches high x 69 mm wide)
Mounting: Multipoise - Mounts in any direction
Approvals, CSA: CSA International: 112395
Approvals, Australian Gas Association: 7960

Accessories:
396221/U – Single Stage Natural to LP Gas Conversion Kit. 8" to 12" adjustment range. Includes regulator spring, o-ring, and adjustment screw. Reuse existing cap screw.
396222/U – Single Stage LP to Natural Gas Conversion Kit. 3" to 5" adjustment range. Includes regulator spring, o-ring, and adjustment screw. Reuse existing cap screw.

Material Number	Opening Characteristics	Inlet/Outlet Size (in.)	Pressure Regulator Setpoint (in. wc)	Pressure Regulator Setpoint (kPa)	Includes
VR8215S1503/U	Standard	1/2 in. x 1/2 in.	3.5 in. wc	0.87 kPa	Natural to LP Conversion Kit
VR8215T1502/U	Slow	1/2 in. x 1/2 in.	3.5 in. wc	0.87 kPa	Natural to LP Conversion Kit

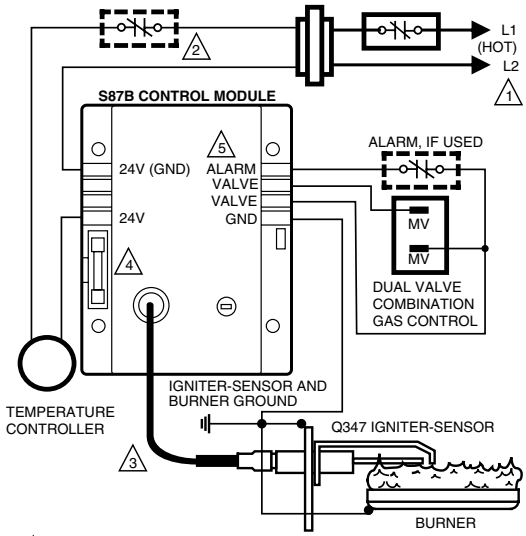

1. POWER SUPPLY. PROVIDE DISCONNECT MEANS AND OVERLOAD PROTECTION AS REQUIRED.
2. ALTERNATE LIMIT CONTROLLER LOCATION.
3. MAXIMUM IGNITER-SENSOR CABLE LENGTH: 3 ft. (0.9 m) OR LESS.
4. 3A REPLACEABLE FUSE.
5. ALARM TERMINAL PROVIDED ON SOME MODELS.

M9043A

VR8245; VR8345 Low Voltage Universal Electronic Ignition Combination Gas Controls

Universal electronic ignition combination gas control for use with direct spark ignition, hot surface ignition or intermittent pilot ignition in 24 Vac, gas-fired appliances, with capacities from 20 to 200 cfh (VR8245M) or 30 to 415 cfh (VR8345M).

- Control includes manual valve, two automatic operators, pressure regulator, pilot adjustment, pilot plug and ignition adapter.
- Replaces many IP, HSI, or DSI gas control.
- For use with natural or manufactured gas or LP gas.
- Includes converter kit to adapt from natural to LP gas.
- All adjustments and wiring connections accessible from top of control.
- Clearly marked, keyed terminal block allows quick attachment of wires and IP/DSI/HSI jumper.

Ignition Type: Direct Ignition; Intermittent Pilot
Voltage: 24 Vac
Frequency: 50 Hz; 60 Hz
Type of Fuel: Natural (LP with included conversion kit)
Body Pattern: Straight-through
Electrical Connections: 1/4 in. quick-connect male terminals
Pilot Gas Outlet: Compression fitting for 1/4 in. OD tubing
Pressure Tapping: 1/8 in. NPT with plug
Capacity (kBtuh):
1/2 x 1/2 inlet x outlet – At 1 in. wc p.d. – 150,000 BTUh: 20,000 BTUh minimum: 200,000 BTUh maximum Natural Gas
3/4 x 3/4 inlet x outlet – At 1 in. wc p.d. – 300,000 BTUh: 30,000 BTUh minimum: 415,000 BTUh maximum Natural Gas
Pressure Ratings (psi): 1/2 psi
Pressure Ratings (kPa): 3.5 kPa
Operating Temperature Range: -40°F to +175°F (-40°C to +79°C)
Mounting: 0 to 90 degrees in any direction from the upright position of the gas control knob, including vertically.
Approvals, Underwriters Laboratories Inc.: UL Component Recognized MCCZ2.MH5323
Approvals, CSA: CSA International: 112395

Accessories:
390427A/U – One 3/4 x 1/2 in. reducer bushing
390427B/U – One 1/2 inch x 3/8 inch reducer bushing
390427E/U – Two 3/4 x 1/2 in. reducer bushings
393690-13/U – 1/2" NPT Elbow Flange kit includes flange, o-rings and hex screws
393690-4/U – 3/4" NPT Straight Flange kit includes flange, o-rings and hex screws
393691/U – Single Stage Natural to LP Gas Conversion Kit. 8" to 12" adjustment range. Includes regulator spring, o-ring, adjustment screw and cap screw
394588/U – Single Stage LP to Natural Gas Conversion Kit. 3" to 5" adjustment range. Includes regulator spring, o-ring, adjustment screw and cap screw
395253-1/U – Single Stage LP to Natural Gas Conversion Kit. 5" to 7" WC adjustment. Includes regulator spring, o-ring, adjustment screw and cap screw
396221/U – Single Stage Natural to LP Gas Conversion Kit. 8" to 12" adjustment range. Includes regulator spring, o-ring, and adjustment screw. Reuse existing cap screw.
396222/U – Single Stage LP to Natural Gas Conversion Kit. 3" to 5" adjustment range. Includes regulator spring, o-ring, and adjustment screw. Reuse existing cap screw.
396021/U – Two Stage Natural to LP Gas Conversion Kit. 8" to 11" adjustment range. Includes regulator spring, o-ring, and adjustment screw. Reuse existing cap screw.
396025/U – Two Stage LP to Natural Gas Conversion Kit. 3" to 5" adjustment range. Includes regulator spring, o-ring, and adjustment screw. Reuse existing cap screw.

	Material Number	Application	Opening Characteristics	Inlet/Outlet Size (in.)	Pressure Regulator Setpoint (in. wc)	Pressure Regulator Setpoint (kPa)	Includes
U	VR8245M2530/U	Single Stage	Standard	1/2 in. x 1/2 in.	3.5 in. wc	0.9 kPa	One 1/2 x 3/8 in. reducer bushing Natural to LP Conversion Kit
U	VR8345K4809/U	Single Stage	Slow	3/4 in. x 3/4 in.	3.5 in. wc	0.87 kPa	Two 3/4 x 1/2 in. reducer bushings Natural to LP Conversion Kit
U	VR8345M4302/U	Single Stage	Standard	3/4 in. x 3/4 in.	3.5 in. wc	0.87 kPa	Two 3/4 x 1/2 in. reducer bushings Natural to LP Conversion Kit
U	VR8345Q4563/U	Two Stage	Standard	3/4 in. x 3/4 in.	1.7 in. wc low; 3.5 in. wc high	0.48 kPa low; 0.87 kPa high	Two 3/4 x 1/2 in. reducer bushings Natural to LP Conversion Kit
U Universal Service Part							

VR8245M/VR8345M wiring connections in intermittent ignition system

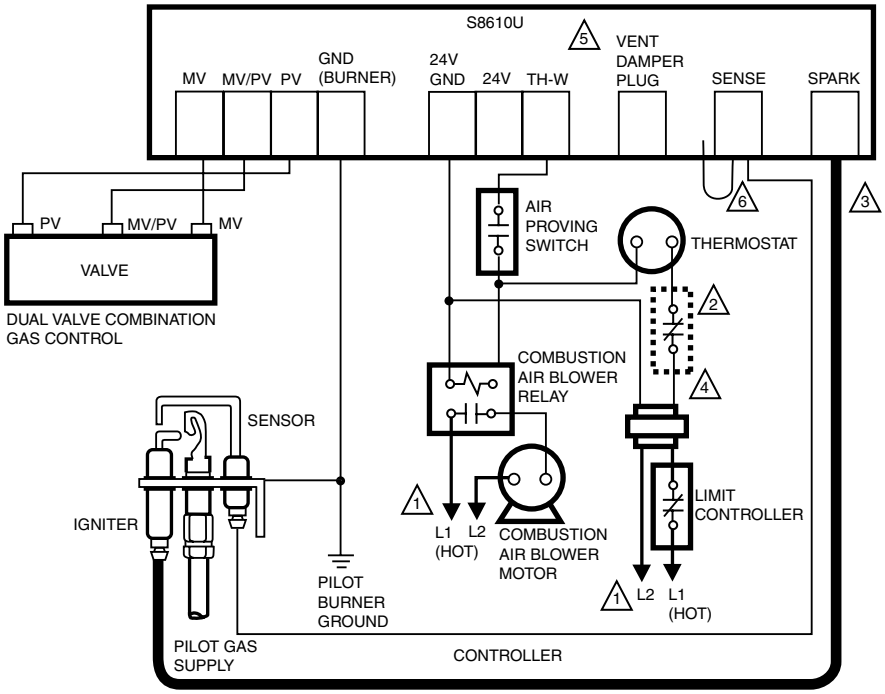

1. POWER SUPPLY. PROVIDE DISCONNECT MEANS AND OVERLOAD PROTECTION AS REQUIRED.
2. ALTERNATE LIMIT CONTROLLER LOCATION.
3. MAXIMUM CABLE LENGTH 3 FT [0.9 M].
4. CONTROLS IN 24V CIRCUIT MUST NOT BE GROUND LEG TO TRANSFORMER.
5. LEAVE VENT DAMPER PLUG CONNECTED.
6. REMOVE JUMPER AND CONNECT SENSE TERMINAL ON TWO ROD APPLICATION ONLY.

M23470

VR8245M/VR8345M wiring connections in intermittent ignition system

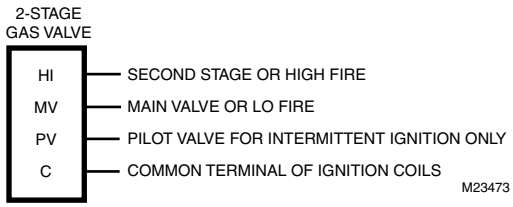

M23473

Dimensions in inches (millimeters)

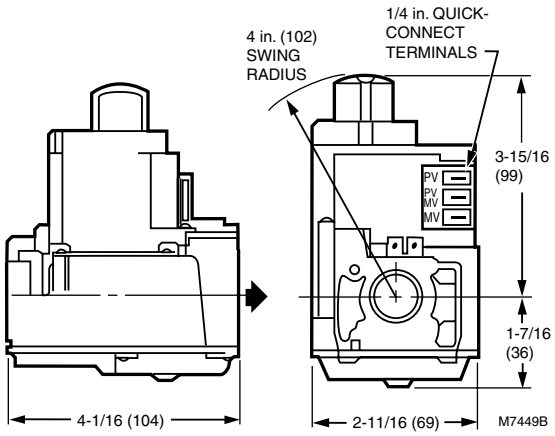

VR9205 24 Vac Direct Ignition Combination 2-Stage Gas Controls

The VR9205Q Direct Ignition Combination 2-Stage Gas Controls are used in gas-fired appliances with up to 140 KBtu/h capacity at 1 in. wc pressure drop. They have been optimized for direct ignition applications and include a manual switch, two automatic operators and a pressure regulator.

Ignition Type: Direct Ignition
Type of Fuel: Natural (LP if conversion kit included)
Body Pattern: Straight-through
Electrical Connections: 1/4 in. quick-connect male terminals
Capacity (kBtuh): At 1 in. wc p.d. – 140,000 BTUh: 20,000 BTUh minimum at high fire, 8,000 BTU minimum at low fire: 200,000 BTUh maximum at max fire Natural Gas
Pressure Ratings (psi): 1/2 psi
Pressure Ratings (kPa): 3.5 kPa
Operating Temperature Range: 40°F to +175°F (-40°C to +79°C)
Mounting: Any direction
Approximate, Dimensions: 4.04 in. high x 5.04 in. wide x 3.2 in. deep (103 mm high x 128 mm wide x 81 mm deep)
Approvals, CSA: CSA International: 112491

Parts and Accessories:
50033841-003 – VR9205Q Natural to LP Conversion Kit. 5" to 11" adjustment range. Includes regulator spring, o-ring, adjustment screw and cap screw.
50033842-001 – VR9205Q LP to Natural Conversion Kit. 0.9" to 4" adjustment range. Includes regulator spring, o-ring, adjustment screw and cap screw.

Material Number	Application	Opening Characteristics	Inlet/Outlet Size (in.)	Voltage	Frequency	Pressure Regulator Setpoint (in. wc)	Pressure Regulator Setpoint (kPa)	Pressure Regulator Adjustment Range	Includes
VR9205Q1507/U	Two-Stage	Standard Opening	1/2 in. x 1/2 in.	24 Vac	50 Hz; 60 Hz	1.7 in. wc low; 3.5 in. wc high	0.42 kPa low; 0.87 kPa high	0.9" WC to 4.0" WC	6 in. wire harness; LP Conversion Kit

Gas Valve Selection Guide

Trade Replacements (Double-Check Specifications Before Replacement)		Specifications				Accessories Included					
Universal Service Part	**Direct Service Part Replacement**	**Opening Characteristics (standard, step)**	**Inlet / Outlet Size (in.)**	**Pressure Regulator Setting (in. wc)**	**Temperature Range**	**Q340 Thermocouple**	**3/4 in. x 1/2 in. Reducer Bushing**	**Natural to LP Conversion Kit**	**3/4 in. Straight Flange**	**1/2 in. x 3/8 in. Reducer Bushing**	**Remote Rod Adapter Knob**
VR8345M4302	VR8345M4302	Standard	3/4 x 3/4	3.5 in. wc (0.87 kPa)	-40° to 175°F (-40° to 79°C)	None	Two	One	None	None	None
	VR8304M3509	Standard	1/2 x 3/4	3.5 in. wc (0.87 kPa)	-40° to 175°F (-40° to 79°C)	None	One	One	None	None	None
	VR8304M4507	Standard	3/4 x 3/4	3.5 in. wc (0.87 kPa)	-40° to 175°F (-40° to 79°C)	None	Two	One	None	None	None
	VR8305M3506	Standard	1/2 x 3/4	3.5 in. wc (0.87 kPa)	-40° to 175°F (-40° to 79°C)	None	One	One	One	None	None
VR8345K4809	VR8345K4809	Slow	3/4 x 3/4	3.5 in. wc (0.87 kPa)	-40° to 175°F (-40° to 79°C)	None	Two	One	None	None	None
	VR8205H1003	Slow	1/2 x 1/2	3.5 in. wc (0.87 kPa)	0° to 175°F (-18° to 79°C)	None	None	None	None	None	None
	VR8304H4503	Slow	3/4 x 3/4	3.5 in. wc (0.87 kPa)	0° to 175°F (-18° to 79°C)	None	None	One	None	None	None
VR8345Q4563	VR8345Q4563	2-Stage	3/4 x 3/4	1.7 in. wc (0.42 kPa) low; 3.5 in. wc (0.87 kPa) high	-40° to 175°F (-40° to 79°C)	None	Two	One	None	None	None
VR8245M2530	VR8245M2530	Standard	1/2 x 1/2	3.5 in. wc (0.87 kPa)	-40° to 175°F (-40° to 79°C)	None	None	One	None	One	None
	VR8204A2076	Standard	1/2 x 1/2	3.5 in. wc (0.87 kPa)	0° to 175°F (-18° to 79°C)	None	None	One	One	One	None
	VR8204M1091	Standard	1/2 x 1/2	3.5 in. wc (0.87 kPa)	-40° to 175°F (-40° to 79°C)	None	None	One	One	One	None
	VR8205A2024	Standard	1/2 x 1/2	3.5 in. wc (0.87 kPa)	0° to 175°F (-18° to 79°C)	None	None	One	One	One	None
VR8215	VR8215S1503	Standard	1/2 x 1/2	3.5 in. wc (0.87 kPa)	-40° to 175°F (-40° to 79°C)	None	None	One	None	None	None
	VR8215T1502	Slow	1/2 x 1/2	3.5 in. wc (0.87 kPa)	-40° to 175°F (-40° to 79°C)	None	None	One	None	None	None
VR9205Q	VR9205Q1507	2-stage	1/2 x 1/2	1.7 in. wc (0.42 kPa) low; 3.5 in. wc (0.87 kPa) high	-40° to 175°F (-40° to 79°C)	None	None	One	None	None	None
VR8300M4406	VR8300M4406	Standard	3/4 x 3/4	3.5 in. wc (0.87 kPa)	-40° to 175°F (-40° to 79°C)	None	Two	One	None	None	None
	VR8300A4508	Standard	3/4 x 3/4	3.5 in. wc (0.87 kPa)	0° to 175°F (-18° to 79°C)	None	Two	One	None	None	None
	VR8300A3500	Standard	1/2 x 3/4	3.5 in. wc (0.87 kPa)	0° to 175°F (-18° to 79°C)	None	One	One	None	None	None
	VR8200A2124	Standard	1/2 x 1/2	3.5 in. wc (0.87 kPa)	0° to 175°F (-18° to 79°C)	One	None	One	One	One	None
	VR8200A2132	Standard	1/2 x 1/2	3.5 in. wc (0.87 kPa)	0° to 175°F (-18° to 79°C)	None	None	One	One	One	None
	VR8200A2744	Standard	1/2 x 1/2	3.5 in. wc (0.87 kPa)	0° to 175°F (-18° to 79°C)	None	None	One	One + One Elbow	One	None
VS820M1309	VS820M1309	Standard	3/4 x 3/4	3.5 in. wc (0.87 kPa)	-40° to 175°F (-40° to 79°C)	None	Two	One	None	One	Yes
	VS820A1054	Standard	3/4 x 3/4	3.5 in. wc (0.87 kPa)	32° to 175°F (0° to 79°C)	None	Two	None	None	One	None
	VS820A1336	Standard	3/4 x 3/4	10.0 in. wc (2.49 kPa)	32° to 175°F (0° to 79°C)	None	Two	None	None	One	None

Notes:
All piloted valves have a 1/4" compression fitting.
All the VR valves come set for natural gas, but can be converted to LP gas.
The VS820A1054 is for natural gas. The VS820A1336 is for LP gas.
All the VR valves have inlet and outlet pressure taps. The VS820 valves have just an outlet pressure tap.

Gas Valve Cross Reference Guide

Trade Replacements (Double-Check Specifications Before Replacement)		Competitive Replacements		
Universal Service Part	**Direct Service Part Replacement**	**Honeywell**	**White-Rogers**	**Robertshaw**
VR8345M4302	VR8345M4302		36E36-304, 36C68-423, 36H32-423	
	VR8304M3509	VR8304M2501		
	VR8304M4507	VR8304M4002, VR8304M4804		
	VR8305M3506	VR8305M4066, VR8305M4165, VR8305M4231	36G22-214, 36C68-423	720-051 (7200DER)
VR8345K4809	VR8345K4809	VR8304K3808, VR8304K4814	36E98-304, 36E24-214, 36E52-214	700-052
	VR8205H1003	VR8205H2605, VR8305H4013, VR8305H4039		
	VR8304H4503	VR8204H1006, VR8204H1055		720-070 (7200IPER-S7C), 720-071 (7200IPER-S7C), 720-072 (7200IPER-S7C), 720-073 (7200IPER-LP-S7C)
VR8345Q4563	VR8345Q4563	VR8205Q2381, VR8205Q2555, VR8205Q2662, VR8205Q2746, VR8205Q2787, VR8304Q4453, VR8304Q4511, VR8305Q4138, VR8305Q4146, VR8305Q4195, VR8305Q4500	36C76-406, 36C76-420, 36C76-463, 36D13-208, 36D13-405, 36E54-214, 36E96-314, 36G54-214	720-082 (7200IPER2-4)
VR8245M2530	VR8245M2530	VR8204A2852, VR8205M1080, VR8205M1106, VR8205M2310, VR8205M2443, VR8205M2450, VR8205M2476	36E36-304, 36E22-214	720-079 (7200IPER), 720-080 (7200IPER-LP) 722-079 (2000IPERHC)
	VR8204A2076	VR8204A1201, VR8204A1219, VR8204A2001, VR8204A2035, VR8204A2043, VR8204A2175, VR8204A2183, VR8204A2241, VR8204A2225, VR8204A2803		
	VR8204M1091	VR8204M1075, VR8204M1232	36E01-204, 36E01-205, 36E01-206, 36E01-305, 36E93-304	
	VR8205A2024	VR8205A2008, VR8205A2081	36G22-214, 36J22-214	722-051 (2000DERHC), 720-051
VR8215	VR8215S1503	VR8205S2262, VR8205S2270, VR8205S2296, VR8205S2338, VR8205S2353, VR8205S2361, VR8205S2379, VR8205S2395, VR8205S2437, VR8205S2858, VR8205S2882, VR8205S5802, VR8205S5828, VR8205S5836, VR8205S5844, VR8215S1222, VR8215S1263, VR8215S5207, VR8215S5215, VR8205A2008, VR8205A2016, VR8205A2024, VR8205A2065, VR8205A2081, VR8205A2131, VR8205A2263, VR8205A2800, VR8205M1080, VR8205M1106, VR8205M1122, VR8205M1130, VR8205M1148, VR8205M1155, VR8205M1163, VR8205M2310, VR8205M2401, VR8205M2476, VR8205M2484, VR8205M2831, VR8205M2864, VR8205M2872, VR8205M2880, VR8205M5024, VR8205M5032	36G22-214, 36J22-214, 36G22-207	
	VR8215T1502	VR8205H1003, VR8205H1011, VR8205H2605, VR8205H2621, VR8205K1157, VR8205K1173, VR8205K2247, VR8205K2593, VR8205K2619, VR8205T5801, VR8215T1205, VR8215T1239, VR8215T5206, VR8215T5214		
VR9205Q	VR9205Q1507	VR9205Q1006, VR9205Q1010, VR9205Q1028, VR9205Q1101, VR9205Q1127, VR9205Q1218		
VR8300M4406	VR8300M4406	VR8300A4003, VR8300A4011, VR8300A4037, VR8200A2827 VR8300A4045, VR8300A4557, VR8300A4565	36C03-400, 36C03-433	700-400
	VR8300A4508	VR8300A4003, VR8300A4011, VR8300A4037, VR8300A4045, VR8300A4557, VR8300A4565	36C01-405	700-400, 720-406 (7200ER)
	VR8300A3500	VR8300A3104, VR8300A3120, VR8300A3153, VR8300A3161, VR8300A3203, VR8300A3559, VR8300A3567, VR8300A3575	36C03-300, 36C03-258	720-404 (7200ER), 720-400, 720-402
	VR8200A2124	VR8200A2009, VR8200A2082, VR8200A2116, VR8200A2215, VR8200A2264, VR8200A2322, VR8200A2348		720-400 (7200ER), 720-402 (7200ER)
	VR8200A2132			
	VR8200A2744	VR8200A2322		
VS820M1309	VS820M1309	VS820A1039, VS820A1807, VS820A1815, VS820A2003, VS820A2011	36C03U-300, 36C03U-333, 36C03U-400, 36C03U-433	
	VS820A1054	VS820A1005, VS820A1013, VS820A1047, VS820A1260, VS820A1278, VS820A1922, VS820A5204		
	VS820A1336	VS820A1120, VS820A1211, VS820A1740, VS820A1872, VS820A1898, VS820A1906		

*Canadian Numbers
For a complete cross-reference, visit www.customer.honeywell.com

SV9501; SV9502; SV9601; SV9602 Intermittent Pilot SmartValve® System

The SmartValve® System Controls combine gas flow control and electronic intermittent pilot sequencing functions into a single unit. This product family offers several different intermittent pilot sequences for a wide range of applications. The specific application of the SmartValve System is the responsibility of the appliance manufacturer. They are directly compatible with the Q3450 or Q3480 Intermittent Pilot burners used with the original controls on the appliance.

- Suitable for a wide range of gas-fired appliances including residential furnaces, roof-top furnaces, residential boilers, unit heaters, infrared heaters, space heaters and commercial cooking units.
- Ignition sequence includes timed trial for ignition.

Ignition System Type: Intermittent Hot Surface Pilot Ignition
Ignition Sequence: Intermittent Pilot
Flame Sense: Two-Rod
Electrical Ratings: 24 Vac
Frequency: 50 Hz; 60 Hz
Body Pattern: Straight-through
Pressure Tapping: 1/8 in. - NPT
Capacity:
1/2 x 1/2 inlet x outlet – At 1 in. wc p.d. - 150,000 BTUh: 20,000 BTUh minimum: 200,000 BTUh maximum Natural Gas
3/4 x 3/4 inlet x outlet – At 1 in. wc p.d. - 300,000 BTUh: 30,000 BTUh minimum: 415,000 BTUh maximum Natural Gas
Pressure Ratings (psi): 1/2 psi
Pressure Ratings (kPa): 3.5 kPa
Ignition Source: Pilot
Ignition Trials To Lockout: Continuous retry

Ignition Trial Time (sec): 90 sec
Flame Failure Response Time (sec): 1.6 sec @ 3 µA
Typical Ignition Hardware: Q3450; Q3480
Mounting: 0 to 90 degrees in any direction from the upright position of the gas control knob, including vertically.
Approximate, Dimensions: 3.2 in. wide x 4.9 in. high x 4.1 in.long (81 mm wide x 124 mm high x 104 mm long)
Approvals, CSA: CSA International: 112395

Accessories (For H and M models only):
393691/U – Single Stage Natural Gas to LP Conversion kit, including regulator spring, adjustment screw and cap screw
394588/U – Single Stage LP to Natural Gas Conversion kit, including regulator spring, adjustment screw and cap screw

	Material Number	Opening Characteristics	Type of Gas	Inlet/Outlet Size (in.)	Pressure Regulator Setting (psi)	Pressure Regulator Setting (kPa)	Prepurge	Ambient Temperature Range	Includes
U	SV9501M2528/U	Standard	Natural (LP with included conversion kit)	1/2 in. NPT x 1/2 in. NPT	3.5 in. WC	0.87 kPa	None	-40°F to +175°F (-40°C to +79°C)	Natural to LP Conversion Kit Extension Harness
U	SV9501M8129/U	Fast-Fast	Natural (LP with included conversion kit)	1/2 in. NPT x 1/2 in. NPT	3.4 in. WC	0.87 kPa	None	-40°F to +175°F (-40°C to +79°C)	Natural to LP Conversion Kit Extension Harness
U	SV9502H2522/U	Slow	Natural (LP with included conversion kit)	1/2 in. NPT x 1/2 in. NPT	3.2 in. WC	0.80 kPa	15 seconds	0°F to 175°F (-18°C to +79°C)	Natural to LP Conversion Kit Extension Harness
U	SV9601M4571/U	Standard	Natural (LP with included conversion kit)	3/4 in. NPT x 3/4 in. NPT.	3.5 in. WC	0.87 kPa	None	-40°F to +175°F (-40°C to +79°C)	Two 3/4 x 1/2 in. reducer bushings Natural to LP Conversion Kit
U	SV9602P4816/U	Step	Natural	3/4 in. NPT x 3/4 in. NPT.	Full Rate: 3.5 in. WC; Step Setting: 0.7 in. WC non-adjustable	Full Rate: 0.87 kPa; Step Setting: 0.17 kPa	30 seconds	-40°F to +175°F (-40°C to +79°C)	Two 3/4 x 1/2 in. reducer bushings Extension Harness
U	SV9602P4824/U	Step	Natural	3/4 in. NPT x 3/4 in. NPT.	Full Rate: 3.5 in. WC; Step Setting: 2.5 in. WC non-adjustable	Full Rate: 0.87 kPa; Step Setting: 0.62 kPa	30 seconds	-40°F to +175°F (-40°C to +79°C)	Two 3/4 x 1/2 in. reducer bushings Extension Harness
U	SV9602P4832/U	Step	LP	3/4 in. NPT x 3/4 in. NPT.	Full Rate: 10.0 in. WC; Step Setting: 2.5 in. WC non-adjustable	Full Rate: 2.49 kPa; Step Setting: 0.62 kPa	30 seconds	-40°F to +175°F (-40°C to +79°C)	Two 3/4 x 1/2 in. reducer bushings Extension Harness
U	SV9602P4840/U	Step	LP	3/4 in. NPT x 3/4 in. NPT.	Full Rate: 10.0 in. WC; Step Setting: 1.4 in. WC non-adjustable	Full Rate: 2.49 kPa; Step Setting: 0.35 kPa	30 seconds	-40°F to +175°F (-40°C to +79°C)	Two 3/4 x 1/2 in. reducer bushings Extension Harness

U Universal Service Part

SV9510; SV9520 Direct Ignition SmartValve® System

The SmartValve® System Controls combine gas flow control and electronic direct main burner ignition sequencing functions into a single unit. The ignition source is 120V hot surface igniter lighting the main burner flame. Provides all gas ignition safety functions by controlling gas flow, ignition source, and a 120 Vac combustion air blower. The control also monitors the appliance airflow proving switch circuit and limit string to assure proper appliance operation.

- The control communicates directly with the ST9160 Electronic Fan Timer (EFT) in typical forced warm air furnace applications.
- It can directly interface with the appropriate power supplies and a system thermostat for additional appliance applications.
- When controlled directly by a thermostat, the control does not provide a postpurge function, as power to the control is removed when the thermostat call for heat ends.
- This system is suitable for a wide range of fan-assisted combustion, gas-fired appliances including furnaces, rooftop furnaces, boilers, unit heaters, infrared heaters, water heaters and commercial cooking appliances.

Ignition System Type: Direct Hot Surface Ignition
Flame Sense: HSI
Type of Gas: Natural (LP if conversion kit included)
Electrical Ratings: 24 Vac
Frequency: 50 Hz; 60 Hz
Body Pattern: Straight-through
Pressure Tapping: 1/8 in. - NPT
Includes: LP Conversion Kit
Capacity:
1/2 x 1/2 inlet x outlet – At 1 in. wc p.d. - 150,000 BTUh: 20,000 BTUh minimum: 200,000 BTUh maximum Natural Gas
Pressure Ratings (psi): 1/2 psi
Pressure Ratings (kPa): 3.5 kPa
Ignition Source: HSI

PrePurge: 15 seconds
Ignition Trials To Lockout: 4 trials
Flame Failure Response Time (sec): 2 sec @ 5 µA
Mounting: 0 to 90 degrees in any direction from the upright position of the gas control knob, including vertically
Approximate, Dimensions: 3.2 in. wide x 4.9 in. high x 4.1 in. long (81 mm wide x 124 mm high x 104 mm long)
Approvals, CSA: CSA International: 112395

Accessories:
393691/U – Single Stage Natural Gas to LP Conversion kit, including regulator spring, adjustment screw and cap screw
394588/U – Single Stage LP to Natural Gas Conversion kit, including regulator spring, adjustment screw and cap screw

	Material Number	Opening Characteristics	Inlet/Outlet Size (in.)	Pressure Regulator Setting (psi)	Pressure Regulator Setting (kPa)	Typical Ignition Hardware	Ignition Sequence	Ignition Trial Time (sec)	Ambient Temperature Range
U	SV9510K2539/U	Slow	1/2 in. NPT x 1/2 in. NPT	3.5 in. WC	0.87 kPa	Norton 271	17/27 sec	9 sec	-40°F to +175°F (-40°C to +79°C)
U	SV9510M2511/U	Standard	1/2 in. NPT x 1/2 in. NPT	3.5 in. WC	0.87 kPa	Norton 271	17/27 sec	7 sec	-40°F to +175°F (-40°C to +79°C)
U	SV9520H8513/U	Fast-Slow	1/2 in. NPT x 1/2 in. NPT	3.5 in. WC	0.87 kPa	Norton 601	7/12 sec	7 sec	0°F to 175°F (-18°C to +79°C)
U	SV9520M2536/U	Standard	1/2 in. NPT x 1/2 in. NPT	3.5 in. WC	0.87 kPa	Norton 601	7/12 sec	7 sec	-40°F to +175°F (-40°C to +79°C)
U Universal Service Part									

SV9541; SV9641 Intermittent Pilot with air control SmartValve® System

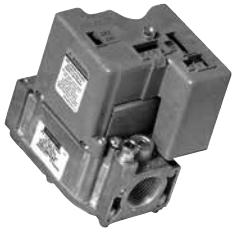

The SmartValve® System Controls combine gas flow control and electronic intermittent pilot sequencing functions into a single unit. The Q3450 or Q3480 Pilot hardware supplies the low voltage igniter, flame sensor and pilot burner. These ignition system controls provide gas ignition safety functions by controlling gas flow, ignition source, and a 120 Vac or 240 Vac combustion air blower. The controls also monitor the appliance airflow proving switch and limit string to assure proper operation.

- These controls communicate directly with an electronic fan timer (ST9160 Electronic Fan Timer for single stage applications; ST9162 Electronic Fan Timer for two-stage applications) in typical forced warm air furnace applications.
- It can directly interface with the appropriate power supplies and a system thermostat for additional appliance applications.
- When controlled directly by a thermostat, these controls do not provide a postpurge function, because power to the control is removed when the thermostat call for heat ends.
- The Systems are suitable for a wide range of fan-assisted combustion gas-fired appliances including furnaces, rooftop furnaces, boilers, unit heaters, infrared heaters, water heaters and commercial cooking appliances.

Ignition System Type: Intermittent Hot Surface Pilot Ignition
Ignition Sequence: Intermittent Pilot
Type of Gas: Natural (LP if conversion kit included)
Flame Sense: Two-Rod
Body Pattern: Straight-through
Pressure Tapping: 1/8 in. - NPT
Capacity:
1/2 x 1/2 inlet x outlet – At 1 in. wc p.d. - 150,000 BTUh: 20,000 BTUh minimum: 200,000 BTUh maximum Natural Gas
3/4 x 3/4 inlet x outlet – At 1 in. wc p.d. - 300,000 BTUh: 30,000 BTUh minimum: 415,000 BTUh maximum Natural Gas
Pressure Ratings (psi): 1/2 psi
Pressure Ratings (kPa): 3.5 kPa
Ignition Source: Pilot
PrePurge: 15 seconds
Ignition Trials To Lockout: continuous retry
Ignition Trial Time (sec): 90 sec
Flame Failure Response Time (sec): 1.6 sec @ 3 µA
PostPurge: 30 seconds
Typical Ignition Hardware: Q3450; Q3480

Ambient Temperature Range: -40°F to +175°F (-40°C to +79°C)
Mounting: 0 to 90 degrees in any direction from the upright position of the gas control knob, including vertically.
Approximate, Dimensions: 3.2 in. wide x 4.9 in. high x 4.1 in. long (81 mm wide x 124 mm high x 104 mm long)
Approvals, CSA: CSA International: 112395

Accessories:
393691/U – Single Stage Natural Gas to LP Conversion kit, including regulator spring, adjustment screw and cap screw
394588/U – Single Stage LP to Natural Gas Conversion kit, including regulator spring, adjustment screw and cap screw
396021/U – 2 Stage Natural Gas to LP Gas Conversion kit, includes regulator shaft
396025/U – 2 Stage LP to Natural Gas Conversion kit, includes regulator shaft
390427A/U – One 3/4 x 1/2 in. reducer bushings
390427E/U – Two 3/4 x 1/2 in. reducer bushings

	Material Number	Opening Characteristics	Inlet/Outlet Size (in.)	Voltage	Frequency	Pressure Regulator Setting (psi)	Pressure Regulator Setting (kPa)	Includes
U	SV9541Q2561/U	Standard 2-stage	1/2 in. NPT x 1/2 in. NPT	24 Vac	60 Hz	1.7 in. WC low; 3.2 in. WC high	0.42 kPa low; 0.80 kPa high	Natural to LP Conversion Kit
U	SV9641M4510/U	Standard	3/4 in. NPT x 3/4 in. NPT.	24 Vac	50 Hz; 60 Hz	3.5 in. WC	0.87 kPa	Two 3/4 x 1/2 in. reducer bushings Natural to LP Conversion Kit
U Universal Service Part								

SmartValve® Control Systems Selection Guide

Specifications					Includes			Cross-Reference	
Ignition/ Application	**Universal Service Part**	**Gas Type**	**Opening Characteristics**	**Ambient Temperature Range**	**Natural to LP Conversion Kit**	**3/4 in. x 1/2 in. Reducer Bushings**	**Extension Harness**	**OEM Brands**	**Replaces**
Intermittent HSI Pilot with Combustion Air Control and Limit Monitoring Forced Air Furnace	SV9541Q2561	Natural	2-Stage	-40° to 175°F (-40° to 79°C)	Yes	None	No	ICP, Heil, Tempstar, Arcoaire, Comfortmaker, KeepRite	SV9540Q2464, SV9541Q3098
	SV9641M4510		Standard Opening		Yes	Two		ICP, Heil, Tempstar, Arcoaire, Comfortmaker, KeepRite, Mestek, Slant/Fin	SV9541M2094, SV9540M2229, SV9540M2260, SV9640M4116, SV9640M4124, SV9540M2278, SV9540M2245, SV9640M3126, SV9640M4132
Direct Ignition, General Application	SV9510M2511	Natural	Standard Opening	-40° to 175°F (-40° to 79°C)	Yes	None	No	Modine	SV9510M2347, SV9510M2362, SV9410M2902, SV9510M2412, SV9510M2354, SV9410M2910, SV9510M2388, SV9510M2420
	SV9520M2536							–	SV9420M2331, SV9520M2403, SV9420M2323
	SV9510K2539		Slow Opening					Roberts Gordon	SV9510H2228, SV9510K2133, SV9510K2158, SV9510K2141, SV9510K2166
	SV9520H8513		Fast-Slow Opening	0° to 175°F (-18° to 79°C)				Armstrong, Concord, AirEase	SV9520H8042, SV9520H8034, SV9520H8067, SV9520H8026
Intermittent HSI Pilot, General Application	SV9601M4571	Natural	Standard Opening	-40° to 175°F (-40° to 79°C)	Yes	Two	No	–	SV9601M4167, SV9601M3003, SV9601M4225
	SV9501M2528					None		ICP, Heil, Tempstar, Arcoaire, Comfortmaker, KeepRite	SV9501M2056, SV9501M2080, SV9501M2718, SV9501M2726, SV9501M2031, SV9501M2049, SV9501M2239, SV9501M2700, SV9501M2734, SV9501M2742, SV9501M2064
	SV9501M8129		Fast-Fast				Yes	–	SV9501M8103
	SV9502H2522		Slow Opening	0° to 175°F (-18° to 79°C)				Laars, Utica, Armstrong, Concord, AireEase	SV9501H3415, SV9501H2417, SV9501H2409, SV9502H1706, SV9502H2704, SV9501H3423, SV9501H2425
	SV9602P4816		Step Opening	-40° to 175°F (-40° to 79°C)	None	Two	Yes	Burnham, ICP, Heil, Tempstar, Arcoaire, Comfortmaker, KeepRite	SV9501P2004, SV9601P4107, SV9501P2053, SV9502P2101, SV9602P4105
	SV9602P4824							Burnham	SV9501P2087, SV9601P4172, SV9502P2127, SV9602P4121
	SV9602P4832							Burnham	SV9501P2020, SV9501P2046, SV9601P4149, SV9601P4164, SV9502P2119, SV9502P2135, SV9602P4113, SV9602P4139
	SV9602P4840							–	SV9601P4115

For a complete cross-reference, visit www.customer.honeywell.com

Parts and Accessories for Combination Gas Controls

Material Number	Description	Used With	
Compression Fittings			
386449/U	Compression fitting for 1/4 inch OD pilot tubing, 0.65 inch total overall length	V800, VS820, VR8100, VR8200, VR8300, VR8104, VR8204, VR8304; V400, VR4200, VR4300, VR4204, VR4304; Honeywell Pilot Burners for Standing Pilot and Intermittent Pilot Applications; SV9501; SV9502; SV9541, SV9601; SV9602; SV9641	
386449-1/U	Compression fitting for 1/4 inch OD pilot tubing, 0.78 inch total overall length	V800, VS820, VR8100, VR8200, VR8300, VR8104, VR8204, VR8304; V400, VR4200, VR4300, VR4204, VR4304; Honeywell Pilot Burners for Standing Pilot and Intermittent Pilot Applications; SV9501; SV9502; SV9541, SV9601; SV9602; SV9641	
386449-4/U	Compression fitting for 1/4 inch OD pilot tubing, 1.15 inch total overall length	V800, VS820, VR8100, VR8200, VR8300, VR8104, VR8204, VR8304; V400, VR4200, VR4300, VR4204, VR4304; Honeywell Pilot Burners for Standing Pilot and Intermittent Pilot Applications; SV9501; SV9502; SV9541, SV9601; SV9602; SV9641	
392449/U	Compression fitting for 1/8 inch OD pilot tubing, 0.65 inch total overall length	V800, VS820, VR8100, VR8200, VR8300, VR8104, VR8204, VR8304; V400, VR4200, VR4300, VR4204, VR4304; Honeywell Pilot Burners for Standing Pilot and Intermittent Pilot Applications; SV9501; SV9502; SV9541, SV9601; SV9602; SV9641	
392449-1/U	Compression fitting for 1/8 inch OD pilot tubing, 0.78 inch total overall length	V800, VS820, VR8100, VR8200, VR8300, VR8104, VR8204, VR8304; V400, VR4200, VR4300, VR4204, VR4304; Honeywell Pilot Burners for Standing Pilot and Intermittent Pilot Applications; SV9501; SV9502; SV9541, SV9601; SV9602; SV9641	
392449-4/U	Compression fitting for 1/8 inch OD pilot tubing, 1.15 inch total overall length	V800, VS820, VR8100, VR8200, VR8300, VR8104, VR8204, VR8304; V400, VR4200, VR4300, VR4204, VR4304; Honeywell Pilot Burners for Standing Pilot and Intermittent Pilot Applications; SV9501; SV9502; SV9541, SV9601; SV9602; SV9641	
Conversion Kit			
391936/U	Single Stage LP to Natural Gas Conversion Kit. 3" to 5" adjustment range. Includes regulator spring, o-ring, adjustment screw and cap screw	V400, V800, VS821, VS820; Standard and Slow opening valves. Not for use with Step valves.	
391937/U	Single Stage Natural to LP Gas Conversion Kit. 8" to 12" adjustment range. Includes regulator spring, o-ring, adjustment screw and cap screw	V400, V800, VS821, VS820; Standard and Slow opening valves. Not for use with Step valves.	
393691/U	Single Stage Natural to LP Gas Conversion Kit. 8" to 12" adjustment range. Includes regulator spring, o-ring, adjustment screw and cap screw	VR8200, VR8300, VR8104, VR8204, VR8304, VR8205 (not VR8205S), VR8305; VR4200, VR4300, VR4204, VR4304, VR4205, VR4305; Standard and Slow opening valves. SV9501; SV9502; SV9541; SV9601; SV9602; SV9641 Smart valves. Not for use with Step valves.	
394588/U	Single Stage LP to Natural Gas Conversion Kit. 3" to 5" adjustment range. Includes regulator spring, o-ring, adjustment screw and cap screw	VR8200, VR8300, VR8104, VR8204, VR8304, VR8205 (not VR8205S), VR8305, VR4200, VR4300, VR4204, VR4304, VR4205, VR4305; Standard and Slow opening valves. SV9501; SV9502; SV9541; SV9601; SV9602; SV9641 Smart valves. Not for use with Step valves.	
395253-1/U	Single Stage LP to Natural Gas Conversion Kit. 5" to 7" WC adjustment. Includes regulator spring, o-ring, adjustment screw and cap screw	VR8200, VR8300, VR8104, VR8204, VR8304, VR8205 (not VR8205S), VR8305; VR4200, VR4300, VR4204, VR4304, VR4205, VR4305; Standard and Slow opening valves. SV9501; SV9502; SV9541; SV9601; SV9602; SV9641 Smart valves. Not for use with Step valves.	
396021/U	Two Stage Natural to LP Gas Conversion Kit. 8" to 11" adjustment range. Includes regulator spring, o-ring, and adjustment screw. Reuse existing cap screw.	VR820xQ, VR830xQ, VR820xN, VR830xN; SV9xxxQ	
396025/U	Two Stage LP to Natural Gas Conversion Kit. 3" to 5" adjustment range. Includes regulator spring, o-ring, and adjustment screw. Reuse existing cap screw.	VR820xQ, VR830xQ, VR820xN, VR830xN; SV9xxxQ	
396221/U	Single Stage Natural to LP Gas Conversion Kit. 8" to 12" adjustment range. Includes regulator spring, o-ring, and adjustment screw. Reuse existing cap screw.	VR8205S,T; VR8215S,T; VR82/VR8300A,M,H,K; VR82/VR8304A,M,H,K; VR82/VR8305A,M,H,K; VR42/VR4300A,M,H,K; VR42/VR4304A,M,H,K; VR42/VR4305A,M,H,K Standard and Slow opening valves. Not for use with Step valves.	
396222/U	Single Stage LP to Natural Gas Conversion Kit. 3" to 5" adjustment range. Includes regulator spring, o-ring, and adjustment screw. Reuse existing cap screw.	VR8205S,T; VR8215S,T; VR82/VR8300A,M,H,K; VR82/VR8304A,M,H,K; VR82/VR8305A,M,H,K; VR42/VR4300A,M,H,K; VR42/VR4304A,M,H,K; VR42/VR4305A,M,H,K Standard and Slow opening valves. Not for use with Step valves.	

Material Number	Description	Used With	
Parts and Accessories			
50033841-003	Natural to LP Conversion Kit. 5" to 11" adjustment range. Includes regulator spring, o-ring, adjustment screw and cap screw.	VR9205Q	
50033842-001	LP to Natural Conversion Kit. 0.9" to 4" adjustment range. Includes regulator spring, o-ring, adjustment screw and cap screw.	VR9205Q	
ECO Adapter			
392451-1/U	ECO adapter with 1/4" x 0.032" quick-connect terminals	V400, V800, VS821, VS820	
393200-1/U	ECO adapter with 1/4" x 0.032" quick-connect terminals	VR8200, VR8300, VR4200, VR4300	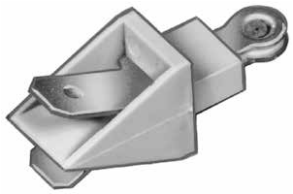
Flange Kit			
393690-13/U	Flange Kit bag assembly, includes 1/2 inch elbow flange, O-ring, 9/64 inch hex screws and 9/64 inch hex wrench	VR8100, VR8200, VR8300, VR4200, VR4300, SV9500, VR8104, VR8204, VR8304, VR4204, VR4304, VR8105, VR8205, VR8305, VR4205, VR4305, that are not 3/4" inlet or outlet. Cannot be used on 3/4 in. inlet/ outlet valves that are not threaded for flange screws or on the inlet end of VR standing pilot models if the ECO connector is used.	
393690-4/U	Flange Kit bag assembly, includes 3/4 inch straight flange, O-ring, 9/64 inch hex screws, and dust plug.	VR8100, VR8200, VR8300, VR4200, VR4300, SV9500, VR8104, VR8204, VR8304, VR4204, VR4304, VR8105, VR8205, VR8305, VR4205, VR4305, that are not 3/4" inlet or outlet. Cannot be used on 3/4 in. inlet/ outlet valves that are not threaded for flange screws or on the inlet end of VR standing pilot models if the ECO connector is used.	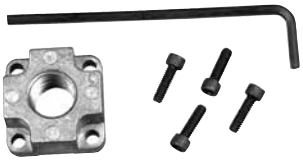
Reducer Bushings			
390427A/U	One 3/4 x 1/2 in. reducer bushing	All Honeywell Combination Gas Controls.	
390427B/U	One 1/2 to 3/8 in. reducer bushing	All Honeywell Combination Gas Controls.	
390427E/U	Two 3/4 x 1/2 in. reducer bushings	All Honeywell Combination Gas Controls.	

Q313 Thermopile Generators

The Q313 Thermopile generates 750 mV, which is sufficient to operate an automatic millivolt gas control system, independent of any outside power source.

- Push-in clip, split nut, and adapter assembly for easy pilot burner installation.
- Spade or quick-connect terminals available for millivolt gas control connections.

Application: Thermopile
Voltage: 750 mV; Open circuit output – 600 mV to 750 mV
Temperature Ratings: Hot Junction – 1400°F; Cold Junction – 780°F (Hot Junction – 760°C; Cold Junction – 416°C)
Used With: Q314, Q324, Q327, Q377, Q379, Q382 Pilot Burners
Approvals: CSA International: 112395

	Material Number	Length	Connection Type	Resistance	Includes
	Q313B1005/U	35 in. (889 mm)	Spade Terminals	2.89 ohms	Terminal Block
U	Q313U3000/U	35 in. (889 mm)	Spade Terminals	2.89 ohms	1/2 in. attaching nut, split nut, spade to quick connect adapter, push-in clip, PG9 adapter
	Q313A1055/U	47 in. (1194 mm)	Spade Terminals	2.90 ohms	1/2 in. attaching nut
U Universal Service Parts					

Q340 Universal 30 mV Thermocouple

The Q340A premium thermocouples generate 30mV. They are used to sense the pilot flame on gas-fired heating systems. The Q340's have the maximum amount of Copel, which provides long-lasting service.

- Push-in clip, split nut, and adapter assembly for easy pilot burner installation.
- Male nut connector for Pilotstat® safety control power units.
- Available in a variety of lead lengths.

Application: Thermocouple
Voltage: 30 mV; Open circuit output – 26 mV to 32 mV
Temperature Ratings: Hot Junction – 1400°F; Cold Junction – 780°F (Hot Junction – 760°C; Cold Junction – 416°C)
Approvals: CSA International: 112395

	Material Number	Length	Connection Type	Resistance	Includes
U	Q340A1066/U	18 in. (457 mm)	11/32 32 Male Connector Nut	0.02 ohms	Adapter and Push In Clip
U	Q340A1074/U	24 in. (610 mm)	11/32 32 Male Connector Nut	0.02 ohms	Adapter and Push In Clip
U	Q340A1082/U	30 in. (762 mm)	11/32 32 Male Connector Nut	0.02 ohms	Adapter and Push In Clip
U	Q340A1090/U	36 in. (914 mm)	11/32 32 Male Connector Nut	0.02 ohms	Adapter and Push In Clip
U	Q340A1108/U	48 in. (1219 mm)	11/32 32 Male Connector Nut	0.03 ohms	Adapter and Push In Clip
U Universal Service Parts					

Q390 Thermocouple

The Q390A thermocouples generate 30mV that is used to sense the pilot flame on gas-fired heating systems.

- Push-in clip, split nut, and adapter assembly for easy pilot burner installation.
- Male nut connector for Pilotstat® safety control power units.
- Available in a variety of lead lengths.

Application: Thermocouple
Voltage: 30 mV; Open circuit output – 26 mV to 32 mV
Temperature Ratings: Hot Junction – 1400°F; Cold Junction – 780°F (Hot Junction – 760°C; Cold Junction – 416°C)
Approvals: CSA International: 112395

Material Number	Length	Connection Type	Resistance	Includes
Q390A1095/U	18 in. (457 mm)	11/32 32 Male Connector Nut	0.02 ohms	Adapter and Push In Clip
Q390A1046/U	24 in. (610 mm)	11/32 32 Male Connector Nut	0.02 ohms	Adapter and Push In Clip
Q390A1053/U	30 in. (762 mm)	11/32 32 Male Connector Nut	0.02 ohms	Adapter and Push In Clip
Q390A1061/U	36 in. (914 mm)	11/32 32 Male Connector Nut	0.02 ohms	Adapter and Push In Clip
Q390A1103/U	48 in. (1219 mm)	11/32 32 Male Connector Nut	0.03 ohms	Adapter and Push In Clip

Q370A Thermocouple

The Q370 Thermocouple is a quick dropout thermocouple that generates 30mV.

- The Q370 has various adapters for different mounting possibilities in various pilot burners.

Application: Thermocouple
Voltage: 30 mV; Output after 60 S: 22mV minimum
Drop Out Time: 30 sec
Temperature Ratings: Hot Junction – 650°C ± 50°C; Cold Junction – 415°C

Material Number	Description	Length	Resistance
Q370A 1014	This 30 mV Thermocouple includes 900 mm leads with 8 adapters.	35 1/2 in. (900 mm)	0.025 to 0.031 ohms

Thermocouple and Thermopile Accessories

Material Number	Description	
394530/U	Thermocouple Tester	

Thermopiles and Thermocouples Selection Guide

Thermocouples						
Lead Length (in.)	Universal	Tradeline	Cross Reference			
			White-Rodgers	Robertshaw	Husky	Johnson Controls
18	Q340A1066/U	Q390A1095/U	H06E-518, H06E-18	—	K16BT-18	K19AT-18
24	Q340A1074/U	Q390A1046/U	H06E-524, H06E-24	1970-24, 1980-24	K16BT-24	K19AT-24
30	Q340A1082/U	Q390A1053/U	H06E-530, H06E-30	1970-30	K16BT-30	K19AT-30
36	Q340A1090/U	Q390A1061/U	H06E-536, H06E-36	1970-36, 1980-36	K16BT-36	K19AT-36
48	Q340A1108/U	Q390A1103/U	H06E-548, H06E-48	—	K16BT-48	K19AT-48

Thermopiles				
Lead Length (in.)	Universal	Connection	Includes	Replaces
35	Q313U3000	Spade Terminal	Push-In clip, PG9 adapter, 1/2" attaching nut, Split nut, spade to QC adapter	Q313A1022, Q313A1139, Q313A1170, Q313A1188
47	Q313A1055		1/2" attaching nut	

Universal Pilot Burner

Q314U

Q345U

Q3451U

Q348U

Universal Pilot Burners make replacing pilot burners easier than ever. With four pilots, contractors can replace over 100 different models. This means fewer stocking trips and more money in your pocket.

Tip Style: Single
Aeration: Non-primary
Direction of Front Tip: Adjustable Left, Right, and Center
Mounting Bracket: U
Type of Gas: Natural; LP

	Product Number	Compression Fitting Length	Orifice 2	Lead Length		Includes	Used With
				in.	mm		
U	Q314U1001/U	1/4" Installed 1/8" Packed	BCR-18; BBR-10; CAR-12; CAR-13; BBR-8	—	—	BCR-18, BBR-10, CAR-12, CAR-13, BBR-8 orifices, Standard and low BTU hoods, Adjustable tip style, Universal mounting bracket	Q309, Q340, Q390, Q313
U	Q345U1005/U	1/4" Installed 1/8" Packed	BCR-20; BCR-18; BBR-12; BBR-11	—	—	BCR-20, BCR-18, BBR-12, BBR-11 orifices, Adjustable tip style, Universal mounting bracket	S8600F, S8600H, S8600M, S8610F, S8610H, S8610M, S8610U, S8660D, S8660E, S8670D, S8670E
U	Q3451U1000/U	1/4" Installed 1/8" Packed	BCR-20; BCR-18; BBR-12; BBR-11; BCR-10	36 in. and 55 in.	915 mm and 1397 mm	BCR-20, BCR-18, BBR-12, BBR-11, BCR-10 orifices, Adjustable tip style, Universal mounting bracket, 36 in. and 55 in. igniter lead lengths	S8600F, S8600H, S8600M, S8610F, S8610H, S8610M, S8610U, S8660D, S8660E, S8670D, S8670E
U Universal Service Parts							

Tip Style: Batwing
Aeration: Primary
Direction of Front Tip: Dual wing - 1 in. wing span
Mounting Bracket: U
Type of Gas: Natural; LP

	Product Number	Compression Fitting Length	Orifice 2	Includes	Used With
U	Q348U1009/U	1/4" Installed 1/8" Packed	NE22, KF24, A26, KR14	NE22, KF24, A26, KR14 orifices, 1 in. batwing, Universal mounting bracket	S8600F, S8600H, S8600M, S8610F, S8610H, S8610M, S8610U, S8660D, S8660E, S8670D, S8670E
U Universal Service Parts					

Q314 Standing Pilot Burner

Non primary-aerated, target type pilot burner for standing pilot applications. Used with Q309, Q340, Q340 thermocouples or Q313 thermopiles.

- Variety of mounting brackets available
- Single tip style
- Variety of tip directions to provide desired flame pattern.
- Interchangeable, color-coded orifices can be ordered to convert between natural and LP gas

Application: Pilot Burner for Standing Pilot Applications
Aeration: Non-primary
Compression Fitting Size: 1/4 in.
Compression Fitting Length: 0.65 in.
Tip Style: Target
Approvals: CSA International: 112395

Material Number	Direction of Front Tip	Type of Gas	Mounting	Orifice	Includes
Q314A3513/U	(F) Front	Natural	Bracket Style A	BCR-18 (0.018 in.)	
Q314A3547/U	(L) Left	Natural	Bracket Style A	BCR-18 (0.018 in.)	
Q314A4586/U	(F) Front	Natural, LP	Bracket Style B; Includes Bracket A adapter	BCR-18 (0.018 in.) / BBR-10 (0.010 in.) Packed	BCR18 and BBR-10 orifices. Special mounting bracket with screws to convert “B” bracket to “A” bracket.
Q314A6094/U	(L) Left	Natural, LP	Bracket Style B; Includes Bracket A adapter	BCR-18 (0.018 in.) / BBR-10 (0.010 in.) Packed	BCR18 and BBR-10 orifices. Special mounting bracket with screws to convert “B” bracket to “A” bracket.
Q314A6102/U	(K) Right	Natural, LP	Bracket Style B; Includes Bracket A adapter	BCR-18 (0.018 in.) / BBR-10 (0.010 in.) Packed	BCR18 and BBR-10 orifices. Special mounting bracket with screws to convert “B” bracket to “A” bracket.

Dimensions in inches (millimeters)

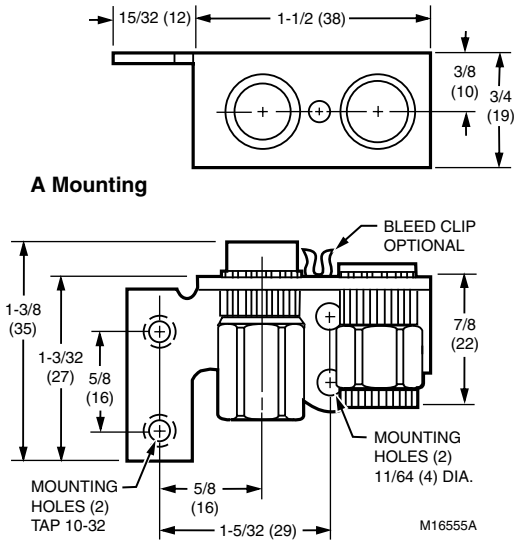

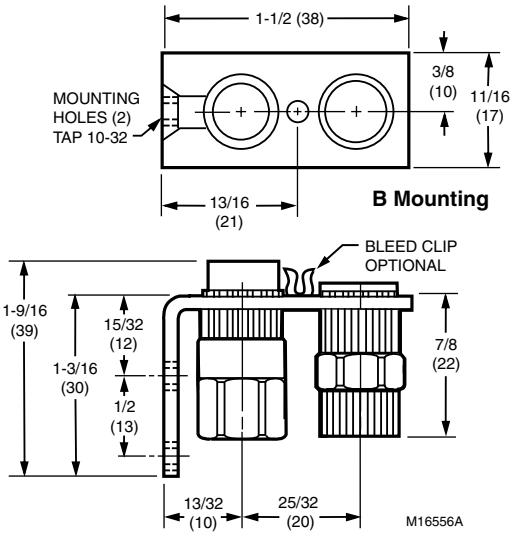

Q327 Standing Pilot Burner

Dimensions in inches (millimeters)

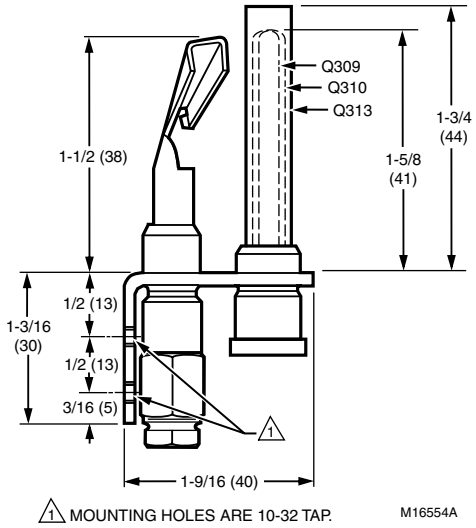

Primary-aerated, bat-wing type pilot burner for standing pilot applications. Used with Q309, Q340, Q340 thermocouples or Q313 thermopiles.

- Variety of mounting brackets available.
- Interchangeable, color-coded orifices can be ordered to convert between natural and LP gas.
- Batwing tip style.

Application: Pilot Burner for Standing Pilot Applications
Aeration: Primary
Compression Fitting Size: 1/4 in.
Compression Fitting Length: 0.65 in.
Tip Style: Batwing
Approvals: CSA International: 112395

Material Number	Batwing Size	Type of Gas	Mounting	Orifice	Includes
Q327A1626/U	1" wing span	Natural, LP	Bracket Style B	A26 (0.026 in.) / K14 (0.014 in.) (packed)	A26 and K14 orifices

Q345 Intermittent Pilot Burner

Dimensions in inches (millimeters)

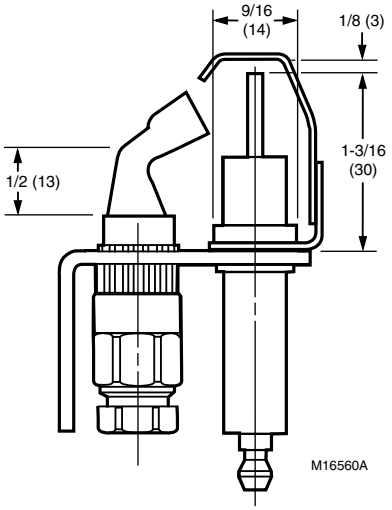

The Q345 Pilot Burner provides pilot flame ignition and sensing in intermittent pilot systems. It consists of a target type pilot burner with a combination spark igniter and flame sensor.

- Includes pilot burner with bracket, ceramic-insulated Kanthal flame rod/spark igniter and ground strap.
- Single tip style.

Application: Pilot Burner for Intermittent Pilot Applications
Aeration: Non-primary
Tip Style: Target
Compression Fitting Size: 1/4 in.
Compression Fitting Length: 0.78 in.
Approvals: CSA International: 112395

Material Number	Direction of Front Tip	Type of Gas	Mounting	Orifice	Includes
Q345A1305/U	(F) Front	Natural	Bracket Style B	BBR-10 (0.010 in.); BCR-18 (0.018 in.)	Special mounting bracket with screws to convert “B” bracket to “A” bracket.
Q345A1313/U	(L) Left	Natural	Bracket Style B	BBR-10 (0.010 in.); BCR-18 (0.018 in.)	Special mounting bracket with screws to convert “B” bracket to “A” bracket.
Q345A1321/U	(K) Right	Natural	Bracket Style B	BBR-10 (0.010 in.); BCR-18 (0.018 in.)	Special mounting bracket with screws to convert “B” bracket to “A” bracket.

Q3450 SmartValve® Pilot Burners

SmartValve® System pilot burners provide pilot flame ignition and sensing for SmartValve Systems. They consist of a bracket, pilot target, ground electrode, replaceable igniter-flame rod, orifice assembly, compression fitting and spring clip.

- Used with SmartValve® System.
- Replaceable Igniter-Flame Rod Assembly (Q3400A).
- Integral keyed plug provides quick, convenient connection of igniter and sensor to SmartValve.
- Natural and LP gas orifices available.
- Variety of target styles available.
- Variety of mounting brackets available.

Application: Pilot Burner
Aeration: Non-primary
Compression Fitting Size: 1/4 in.
Tip Style: Target
Temperature Ratings: Leadwire – 250°C
Used With: SmartValve

Accessories:
Q3400A1024/U – 30" Igniter Flame Rod Assembly
Q3400A1081/U – 36" Igniter Flame Rod Assembly

Material Number	Type of Gas	Mounting	Orifice	Length	Direction of Front Tip	Includes
Q3450C1185/U	Natural or LP	Bracket Style C	BCR-18 (0.018 in.) Installed; Packed with BCR-20 (0.020 in.); BCR-22 (0.022 in.); BCR-12 (0.12 in.)	Ignition Wire – 30 in. (762 mm)	(L) Left	BCR-18 (0.018 in.); BCR-20 (0.020 in.); BCR-22 (0.022 in.); BCR-12 (0.12 in.)
Q3450C2092/U	Natural or LP	Bracket Style C	BCR-18 (0.018 in.) Installed; Packed with BCR-20 (0.020 in.); BCR-22 (0.022 in.); BCR-12 (0.12 in.)	Ignition Wire – 30 in. (762 mm)	(F) Front	BCR-18 (0.018 in.); BCR-20 (0.020 in.); BCR-22 (0.022 in.); BCR-12 (0.12 in.)

Residential Combustion Pilot Burner Parts

Material Number	Description	Used With	
Compression Fittings			
386449/U	Compression fitting for 1/4 inch OD pilot tubing, 0.65 inch total overall length	Honeywell Pilot Burners for Standing Pilot and Intermittent Pilot Applications	
386449-1/U	Compression fitting for 1/4 inch OD pilot tubing, 0.78 inch total overall length	Honeywell Pilot Burners for Standing Pilot and Intermittent Pilot Applications	
386449-4/U	Compression fitting for 1/4 inch OD pilot tubing, 1.15 inch total overall length	Honeywell Pilot Burners for Standing Pilot and Intermittent Pilot Applications	
392449/U	Compression fitting for 1/8 inch OD pilot tubing, 0.65 inch total overall length	Honeywell Pilot Burners for Standing Pilot and Intermittent Pilot Applications	
392449-1/U	Compression fitting for 1/8 inch OD pilot tubing, 0.78 inch total overall length	Honeywell Pilot Burners for Standing Pilot and Intermittent Pilot Applications	
392449-4/U	Compression fitting for 1/8 inch OD pilot tubing, 1.15 inch total overall length	Honeywell Pilot Burners for Standing Pilot and Intermittent Pilot Applications	
Pilot Orifice			
388146AG/U	0.026 in. Natural Gas Orifice with 1/4 in. compression fitting. Ribbed style. Orifice is stamped: A26	Q179, Q327, Q348	
388146KP/U	0.014 LP orifice with 1/4 in. compression fitting. Ribbed style. Orifice is stamped: KR14	Q179, Q327, Q348, Q3480, Q3481	
388146KR/U	0.014 in. LP orifice with 1/4 in. compression fitting. Flat style. Orifice is stamped: KR14	Q179, Q327, Q348, Q3480, Q3481	
388146NE/U	0.022 in. Natural Gas Orifice with 1/4 in. compression fitting. Ribbed style. Orifice is stamped: NE22	Q179, Q327, Q348, Q3480, Q3481	
388468D/U	0.010 in. LP Gas Orifice with 1/4 in. compression fitting. Flat style. Orifice is stamped: L10.	Q324	
388468H/U	0.018 in. Natural Gas Orifice with 1/4 in. compression fitting. Flat style. Orifice is stamped: N18	Q324	
390686-1/U	0.010 in. LP Orifice. Orifice is stamped BBR10.	Q314; Q345; Q350, Q3450; Q3451; Q3452	
390686-15/U	0.009 in. LP Orifice. Orifice is stamped BBR9	Q314; Q362; Q377	
390686-23/U	0.008 in. LP Orifice. Orifice stamped with GAF8.	Q350, Q377, Q380	
390686-24/U	0.014 in. LP Orifice. Orifice stamped: BBR14.	Q314, Q345, Q382, Q3450, Q3451, Q3452	
390686-25/U	0.012 in. LP Orifice. Orifice is stamped BBR12.	Q314, Q345, Q373, Q379, Q3450, Q3451, Q3452	
390686-32/U	0.014 in. Natural Gas Orifice. Orifice stamped: BAR-14.	Q314, Q345, Q373, Q3450, Q3451, and Q3452	
390686-36/U	0.011 in. LP Orifice. Orifice stamped: BBR11.	Q314, Q345, Q373, Q3450, Q3451, and Q3452	
390686-4/U	0.018 in. Natural Gas Orifice. Orifice is stamped BCR18	Q308, Q314, Q327, Q345, Q362, Q373, Q379, Q380, Q3450, Q3451 and Q3452	
390686-5/U	0.020 in. Natural Gas Orifice. Orifice is stamped BCR20	Q314, Q327, Q345, Q362, Q373, Q382, Q3450, Q3451 and Q3452	
392431/U	Pilot Hardware for Y8610	Y8610	
SmartValve Flame Rod Assemblies			
Q3400A1024/U	30 in. Igniter Flame Rod Assembly	SmartValve, Field replacement for Q3450, Q3480 hot surface pilot burner	
Q3400A1081/U	36 in. Igniter Flame Rod Assembly	SmartValve, Field replacement for Q3450, Q3480 hot surface pilot burner	

S8610U Universal Intermittent Pilot Module

Universal intermittent pilot ignition module replaces multiple field installed intermittent pilot modules supplied by Honeywell, Robertshaw, Johnson, and UTEC (HSC). Includes instructions and accessories for easy replacement.

- Replaces over 400 White-Rogers, Robertshaw and Honeywell intermittent pilot ignition modules
- Provides ignition sequencing, flame monitoring and safety shutoff for intermittent pilot warm air furnaces and heating appliances
- Provides 100 percent pilot gas shutoff if pilot fails to light; after 6-minute delay, trial for ignition is repeated. Ignition trial/delay sequence is repeated until the appliance lights or call for heat is removed.
- For use with Natural or LP gas
- For use in single rod or dual rod/remote sense applications
- Includes spark cable adapters to allow field replacement of both Honeywell and competitive controls without replacing existing spark cable.

Ignition System Type: Intermittent Pilot
Ignition Sequence: Continuous Retry
Typical Gas Control: VR8204, VR8304
Type of Gas: Natural or LP
Ignition Source: Internal high voltage spark generator
Lockout Timing: continuous retry
Maximum Valve Load @ 24 Vac (Amps): 1A Pilot, 2A Main @ 165°F; 1A Pilot, 1A Main @ 175°F
Typical Ignition Hardware: Q345, Q3451, Q3452
Approximate, Dimensions: 3 15/16 in. high x 5 7/16 in. wide x 2 5/8 in. deep (100 mm high x 138 mm wide x 67 mm deep)
Electrical Ratings: 24 Vac

Frequency: 60 Hz
Ambient Temperature Range: -40°F to +165°F (-40°C to +74°C)
Approvals, CSA: Design Certified
Tradeline Value: Tradeline
Flame Failure Response Time (sec): 2 seconds maximum

Accessories:
394800-30/U – 30 in. Ignition Cable Assembly with a right angle boot for ignition terminal and 1/4 in. straight quick connect at module end for S8600 family.
394801-30/U – 30 in. ignition cable assembly with a straight boot on igniter end and a 1/4 in. straight connect at ignition module end.

Material Number	Flame Sense	Ignition Trial Time (sec)	Between Trial Time (sec)	Ignition Trials To Lockout	PrePurge	Includes
S8610U3009/U	Single Rod or Two Rods	15 or 90 sec	5 minute delay after failed trial for ignition.	continuous retry	Configurable to 30 seconds or no prepurge	Damper connection with automatic vent damper plug

S87 Direct Spark Ignition Modules

Ignition Modules provide electronic control of direct spark ignition systems used on gas fire furnaces, boilers, and other heating appliances.

- Control ignition sequence and gas control operation.
- Generate high voltage potential for main burner ignition.
- Lockout after one trial for ignition if main burner fails to ignite.
- Reset from thermostat after lockout.
- Use modules (except S87C) with any combination gas control designed for direct spark applications and rated 2.0A or less.

Ignition System Type: Direct Spark Ignition
Typical Gas Control: VR8205, VR8305
Type of Gas: Natural or LP
Ignition Source: Internal high voltage spark generator
Ignition Trials To Lockout: 1
Approximate, Dimensions: 5 1/4 in. high x 4 1/16 in. wide x 1 15/16 in. long (133 mm high x 103 mm wide x 49 mm deep)

Electrical Ratings: 24 Vac
Frequency: 60 Hz
Ambient Temperature Range: -40°F to +175°F (-40°C to +79°C)
Approvals, CSA: File 112491_0_000
Flame Failure Response Time (sec): 0.8 sec. @ 5.0 microamp
Flame Failure Re-ignition Time (sec): 0.8 sec. maximum

Material Number	Flame Sense	Ignition Sequence	Ignition Trial Time (sec)	Lockout Timing	Typical Ignition Hardware	Maximum Valve Load @ 24 Vac (Amps)	Typical Ignition Hardware	PrePurge	Includes
S87B1008/U	Single Rod	Single trial for main burner ignition (then shut down and lockout)	6 sec.	6 sec.	Q347A	2A	Q347A	None	Alarm terminal
S87B1016/U	Single Rod	Single trial for main burner ignition (then shut down and lockout)	11 sec.	11 sec.	Q347A	2A	Q347A	None	Alarm terminal
S87B1024/U	Single Rod	Single trial for main burner ignition (then shut down and lockout)	21 sec.	21 sec.	Q347A	2A	Q347A	None	Alarm terminal
S87B1065/U	Single Rod	Single trial for main burner ignition (then shut down and lockout)	4 sec.	4 sec.	Q347A	2A	Q347A	None	Alarm terminal
S87C1006/U	Two Rod	Single trial for main burner ignition (then shut down and lockout)	6 sec.	6 sec.	Q347A, Q354, Q366		Q347A, Q354, Q366	None	
S87C1030/U	Two Rod	Single trial for main burner ignition (then shut down and lockout)	21 sec.	21 sec.	Q347A, Q354, Q366		Q347A, Q354, Q366	None	
S87D1004/U	Two Rod	Single trial for main burner ignition (then shut down and lockout)	6 sec.	6 sec.	Q347A, Q354, Q366	2A	Q347A, Q354, Q366	None	Alarm terminal
S87D1012/U	Two Rod	Single trial for main burner ignition (then shut down and lockout)	11 sec.	11 sec.	Q347A, Q354, Q366	2A	Q347A, Q354, Q366	None	Alarm terminal
S87D1020/U	Two Rod	Single trial for main burner ignition (then shut down and lockout)	4 sec.	4 sec.	Q347A, Q354, Q366	2A	Q347A, Q354, Q366	None	Alarm terminal
S87D1038/U	Two Rod	Single trial for main burner ignition (then shut down and lockout)	21 sec.	21 sec.	Q347A, Q354, Q366	2A	Q347A, Q354, Q366	None	Alarm terminal
S87J1026/U	Single Rod	Single trial for main burner ignition (then shut down and lockout)	11 sec.	11 sec.	Q347A	2A	Q347A	30 sec. minimum	
S87J1034/U	Single Rod	Single trial for main burner ignition (then shut down and lockout)	21 sec.	21 sec.	Q347A	2A	Q347A	30 sec. minimum	
S87K1008/U	Two Rod	Multiple trials for main burner ignition (then shut down and lockout)	4 sec.	4 sec.	Q347A, Q354, Q366	2A	Q347A, Q354, Q366	30 sec. minimum	

S89E, F Direct Spark Ignition Modules

Ignition Modules provide electronic control of direct spark ignition systems, with external spark transformers, used on gas-fired furnaces, boilers, conversion burners and other heating appliances.

- Controls ignition sequence and gas control operation in direct spark ignition systems.
- Control separate 120 Vac spark generator that provides high voltage potential for main burner ignition.
- Lockout after one trial for ignition if main burner fails to ignite.
- Reset from thermostat after lockout. Use separate electrodes for spark ignition and flame sensing.
- Use any 24 Vac combination gas control designed for direct spark applications and rated at 2.0A or less.

Ignition System Type: Direct Spark Ignition
Ignition Sequence: Single trial for main burner ignition (then shut down and lockout)
Typical Gas Control: VR8205, VR8305
Type of Gas: Natural or LP
Ignition Source: External (120 VAC powered) High Voltage Spark Generator
Lockout Timing: 4 sec.
Maximum Valve Load @ 24 Vac (Amps): 2A

Approximate, Dimensions: 5 1/4 in. high x 4 1/16 in. wide x 1 15/16 in. long (133 mm high x 103 mm wide x 49 mm deep)
Electrical Ratings: 24 Vac
Frequency: 60 Hz
Ambient Temperature Range: -40°F to +175°F (-40°C to +79°C)
Approvals, CSA: Design Certified
Flame Failure Response Time (sec): 2.0 sec. @ 2.5 microamp
Flame Failure Re-ignition Time (sec): 0.8 sec. maximum

Material Number	Flame Sense	Ignition Trial Time (sec)	Ignition Trials To Lockout	PrePurge	Includes
S89E1058/U	Two Rod	4 sec.	1		
S89F1098/U	Two Rod	4 sec.	1	30 sec. minimum	
S89F1106/U	Two Rod	4 sec.	1	30 sec. minimum	Labels applied upside down for inverted mounting

S8910 Universal Hot Surface Ignition Module

Universal Hot Surface Ignition Module is designed to provide easy field replacement of a wide range of hot surface ignition modules manufactured by Honeywell, Robertshaw and White-Rodgers. The S8910U Module provides operating control of a direct ignition system using a 120 Vac hot surface igniter.

- Replaces many White-Rodgers, Robertshaw and Honeywell hot surface ignition models.
- For 120 Vac (up to 5.0A) surface igniter (Norton 201/271 or equivalent).
- For local (single rod) or remote (dual rod) rectification type flame sensing.
- Contains easy-to-use instructions plus the accessories required to adapt the existing hot surface ignition module.
- Provides one or three ignition trials (four second or seven-second trials) per call for heat; prepurge of 32 seconds or less; up to 96 seconds between purge trial times.
- Temperature range is -40°F to +175°F (-40°C to +79°C).

Ignition System Type: Direct Hot Surface Ignition
Ignition Sequence: The number of trials for ignition and trial time is determined by the selection tab. If a selection tab is not installed, the module will operate at four seconds trial time and one ignition trial.
Typical Gas Control: VR8205, VR8305
Type of Gas: Natural or LP
Ignition Source: Line Voltage (120 VAC) Hot Surface Element (Norton Model 201 or 270)
Lockout Timing: 4 sec. or 7 sec.
Maximum Valve Load @ 24 Vac (Amps): 2A

Typical Ignition Hardware: Norton 201, Norton 271, Q354
Approximate, Dimensions: 5 1/4 in. high x 4 1/16 in. wide x 1 15/16 in. long (133 mm high x 103 mm wide x 49 mm deep)
Electrical Ratings: 24 Vac
Frequency: 60 Hz
Ambient Temperature Range: -40°F to +175°F (-40°C to +79°C)
Approvals, CSA: Design Certified
Tradeline Value: Tradeline
Flame Failure Response Time (sec): 1.5 sec.

Material Number	Flame Sense	Ignition Trial Time (sec)	Between Trial Time (sec)	Ignition Trials To Lockout	PrePurge
S8910U1000/U	Single Rod or Two Rods	4 sec. or 7 sec.	(2) 96 sec.- 3 trial mode only	1 or 3	32 seconds

S8910U3000 Universal Hot Surface Ignition Module

One universal ignition module covers the most common timing and flame sensing configurations. The Honeywell S8910U Universal Hot Surface Ignition Module is the only model you need to replace more than 800 Honeywell and competitive controls. LED status indicators and microammeter ports simplify troubleshooting. Field configurable DIP switches make it quick and simple to match the characteristics of the old control.

- Replaces over 800 White-Rodgers, Robertshaw and Honeywell hot surface ignition models.
- For 120 Vac (up to 5.0A) surface igniter (Norton 201/271 or equivalent).
- S8910U 3000 Series has LED status indicator and microammeter ports for easy troubleshooting
- For local (single rod) or remote (dual rod) rectification type flame sensing.
- Contains easy-to-use cross reference and instructions plus the accessories required to replace the existing hot surface ignition module.
- Provides one or three ignition trials (four-second or seven-second trials) per call for heat.
- Field selectable number of ignition trials and trial time based on unit being replaced.
- Igniter warm up time: 7 (12 seconds second and third trial), 17 (27 seconds second and third trial), 34, or 45 seconds

Ignition System Type: Direct Hot Surface Ignition
Ignition Sequence: The number of trials for ignition and trial time is determined by the dip switch selection.
Typical Gas Control: VR8205, VR8305
Type of Gas: Natural or LP
Ignition Source: Line Voltage (120 VAC) Hot Surface Element (Norton Model 201 or 270)
Lockout Timing: 4 sec. or 7 sec.
Maximum Valve Load @ 24 Vac (Amps): 2A

Typical Ignition Hardware: Norton 201, Norton 271, Q354
Approximate, Dimensions: 5 1/4 in. high x 4 1/16 in. wide x 1 15/16 in. deep (133 mm high x 103 mm wide x 49 mm deep)
Electrical Ratings: 24 Vac
Frequency: 50 Hz; 60 Hz
Ambient Temperature Range: -40°F to +175°F (-40°C to +79°C)
Approvals, CSA: Design Certified
Tradeline Value: Tradeline
Flame Failure Response Time (sec): 1.5 sec

Material Number	Flame Sense	Ignition Trial Time (sec)	Between Trial Time (sec)	Ignition Trials To Lockout	PrePurge
S8910U3000/U	Single Rod or Two Rods	4 sec. or 7 sec.	(2) 96 sec (32 Seconds Prepurge and 64 seconds interpurge)	1 or 3	32 seconds

Y8610U Universal Retrofit Intermittent Pilot Gas Burner Ignition Systems

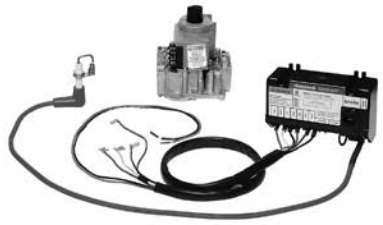

Complete kit converts conventional standing pilot system to an intermittent pilot system. For use with 24 Vac gas-fired atmospheric furnaces, boiler and heating appliances.

- Y8610U kits are for use with natural or LP gas. Provides 100 percent pilot gas shutoff if pilot fails to light. After 6-minute delay, trial for ignition is repeated.
- Ignition trial/delay sequence is repeated until the appliance lights or call for heat is removed.

Ignition System Type: Intermittent Pilot
Ignition Sequence: Continuous retry, after trial for ignition, pilot gas shuts off for 5 minutes, then another trial for pilot ignition takes place
Typical Gas Control: VR8204, VR8304
Type of Gas: Natural or LP
Ignition Source: Internal high voltage spark generator
Lockout Timing: 15 or 90 seconds
Maximum Valve Load @ 24 Vac (Amps): 1A Pilot, 2A Main @ 24Vac

Typical Ignition Hardware: Q345, Q3451
Approximate, Dimensions: 3 15/16 in. high x 5 7/16 in. wide x 2 5/8 in. deep (100 mm high x 138 mm wide x 67 mm deep)
Electrical Ratings: 24 Vac
Frequency: 60 Hz
Ambient Temperature Range: -40°F to +165°F (-40°C to +74°C)
Flame Failure Response Time (sec): 2.0 sec

Material Number	Flame Sense	Ignition Trial Time (sec)	Ignition Trials To Lockout	PrePurge	Includes
Y8610U4001/U	Single Rod or Two Rods	15 or 90 seconds	continuous retry	0 or 30 seconds	VR8204A2142 valve (1/2 x 1/2; 3.5" WC setting; 150 kBtu/hr at 1" p.d.)
Y8610U6006/U	Single Rod or Two Rods	15 or 90 seconds	continuous retry	0 or 30 seconds	VR8304M3558 (1/2 x 3/4; 3.5" setting; 270kBtu/hr at 1 in. p.d.)

Ignition Pilot Modules Selection Guide

	Applications			Timings					
Universal Service Part	**Ignition System**	**Flame Sensor**	**Ignition Sequence (Note 1)**	**Ignition Trials To Lockout (Note 1)**	**Ignition Trial Time**	**Between Trial Time**	**Pre-Purge**	**Flame Failure Response Time**	**Igniter Warm-Up Time**
S8910U3000/U	Line Volt Hot Surface Ignition	1 or 2 Rods	Z	1 or 3 Field Selectable	4 sec. or 7 sec. Field Selectable	96 sec. (32 sec. prepurge and 64 sec. interpurge)	32 sec.	1.5 sec. maximum	7 (12 sec. 2nd and 3rd trial), 17 (27 sec. 2nd and 3rd trial), 34 or 45 sec.
S8910U1000/U	Line Volt Hot Surface Ignition	1 or 2 Rods	P	1 or 3 Field Selectable	4 sec. or 7 sec. Field Selectable	96 sec., 3 Trial Mode Only	32 sec.	1.5 sec	
S8610U3009/U	Intermittent Pilot	1 or 2 Rods	C	C	15 sec. or 90 sec. Field Selectable	5 Minute Delay After Failed Trial for Ignition	0 sec. or 30 sec. Field Selectable	2.0 sec. max.	
Y8610U4001/U	Intermittent Pilot	1 or 2 Rods	C	C	15 sec. or 90 sec. Field Selectable	5 Minute Delay After Failed Trial for Ignition	0 sec.	2.0 sec.	
Y8610U6006/U	Intermittent Pilot	Single Rod	C	C	15 sec. or 90 sec Field Selectable.	5 Minute Delay After Failed Trial for Ignition	0 sec.	2.0 sec. max.	

Features and Functions					Cross-Reference			
Universal Service Part	**Type of Gas**	**Ignition Source**	**Typical Ignition Hardware**	**Includes**	**Honeywell**	**White-Rodgers**	**Robertshaw**	**Johnson Controls**
S8910U3000/U	Nat or LP	Switched Line Voltage	Norton 201, Norton 271, Hot Surface Elements, Q354 Flame Rod	—	S89C1004, S89C1007, S89C1012, S89C1046, S89C1087, S89C1103, S89D1002, S89G1005, S89F1011, S89G1013, S89G1021, S89G1029, S89G1047, S89H1003, S89H1011, S89H1029, S89J1008, S890D1006, S890G1003, S890G1037, S89H1002, S890H1010, S8910U1000/U	50E47 1-79, 101-179, 201-279, 301-379; 5047F1-79, 101-179, 201-279, 301-379	HS780-17NL 104A, 306A, 308A; HS780-17NR 104A, 306A, 308A; HS780-34NL 108A, 304A, 306A, 308A, 312A; HS780-34NR 104A, 306A, 308A, 312A; HS780-34PL 308A	—
S8910U1000/U	Nat or LP	Switched Line Voltage	Norton 201, Norton 271, Hot Surface Elements, Q354 Flame Rod	—	S89C1004, S89C1007, S89C1012, S89C1046, S89C1087, S89C1103, S89D1002, S89G1005, S89F1011, S89G1013, S89G1021, S89G1029, S89G1047, S89H1003, S89H1011, S89H1029, S89J1008, S890D1006, S890G1003, S890G1037, S89H1002, S890H1010	50E47 1-79, 101-179, 201-279, 301-379; 5047F1-79, 101-179, 201-279, 301-379	HS780-17NL 104A, 306A, 308A; HS780-17NR 104A, 306A, 308A; HS780-34NL 108A, 304A, 306A, 308A, 312A; HS780-34NR 104A, 306A, 308A, 312A; HS780-34PL 308A	—
S8610U3009/U	Nat or LP	Internal	Q345, Q3451, Q3452	Internal Damper Connector	S86 Series, S90 Series, S8600 Series, S8610 Series, S8620 Series, S8660 Series, S8670 Series, S8680J1004	50D49-350, 50D49-360, 50D49-361, 50D50-843, 50D-401	710-713, 710-715, 735-737, 780-002, 780-003, 780-701, 780-715, 780-735, 780-736, 780-737, 780-845, SP710, SP715, SP720, SP730, SP735, SP750 Series	CSA42, 43, 44, 45, 46, 48, 49; G60, G65, G67, G770 Series
Y8610U4001/U	Nat or LP	Internal	Adapter for Pilot Burner Included	Internal Damper Connector	Y8610U3029	—	—	—
Y8610U6006/U	Nat or LP	Internal	Adapter for Pilot Burner Included	Internal Damper Connector	Y8610U3003	—	—	—

Notes:
1. Ignition Sequence
C = Continuous retry - After trial for ignition, pilot gas shuts off for 5 minutes, then another trial for pilot ignition takes place.
P = The number of trials for ignition and trial time is determined by the selection tab. If a selection tab is not installed, the module will operate at four seconds trial time and one ignition trial.
Z = The number of ignition trials, trial time, between trial time, prepurge, and igniter warm-up times are determined by the appropriate dip switch selection. Please refer to the instruction guide for appropriate timing selection.

For a complete cross-reference, visit www.customer.honeywell.com

Gas Ignition Module Accessories

Material Number	Description	Used With	
392125-1/U	25 in. ignition cable assembly with a right angle boot on the igniter end and a straight boot on the module end. For use with the S86/S87 family.	S86/S87 family	
392125-2/U	36 in. ignition cable assembly with a right angle boot on the igniter end and a straight boot on the module end. For use with the S86/S87 family.	S86/S87 family	
394800-30/U	30 in. Ignition Cable Assembly with a right angle boot for ignition terminal and 1/4 in. straight quick connect at module end for S8600 family.	S8600 family	
394800-32/U	32 in. Ignition Cable Assembly with a right angle boot for ignition terminal and 1/4 in. straight quick connect at module end for S8600 family.	S8600 family	
394800-36/U	36 in. Ignition Cable Assembly with a right angle boot for ignition terminal and 1/4 in. straight quick connect at module end for S8600 family.	S8600 family	
394801-30/U	30 in. ignition cable assembly with a straight boot on igniter end and a 1/4 in. straight connect at ignition module end.	S8600 family	
394801-36/U	36 in. ignition cable assembly with a straight boot on igniter end and a 1/4 in. straight connect at ignition module end.	S8600 family	
4074EPM/U	Quick connect to Rajah adapter for S8600 family	S8600 family	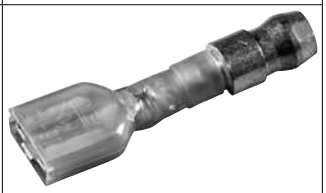

Q3200U Igniter Bracket Replacement Cross Reference[a]

Manufacturer	OEM Part Number	Q3200U Bracket[b]
American Road Equip.	201W	A
Arco Air	1096048	D
	1380680	
Armstrong Air	38322B001	A
Carrier/Bryant/Payne	LH33ZS001	B or E[c]
	LH33ZS001A	
	LH33ZS002	
	LH33ZS002A	
	LH33ZS003	
	LH33ZS003A	
	LH33ZS004	
Claire Bros.	C-238	A
	C242	
Coleman	1474-051	A
	1474-052	
Comfort Maker	1096048	D
Detroit Radiant	201D	A
DMO Industries	20834	A
Dornback Furnace	271W	A
Ducane	20015201	B
Enero Tech	10399	A
Evcon	1474-051	A
	1474-052	
Evcon Coleman	025-32625-000	B
Goodman	B1401009	D
	B1401018	C
	B1401018S	D
HB Smith	50018	A
Heil	1096048	D
Hupp Industries	09050	A
Intercity	1009604	D
	1096048	
Majestic	75-92-104	A
	75-92-105	
Metzger	201N	A
	201W	
Modine	5H76032A	C
Mor-Flo	3200618	A
	511-330-193	B
Nordyne	105141000	A
	632-0770	
	632-0880	
Norton/St Gobain	201	B
	271	
	201D	A
	201K	
	201L	
	201N	
	201R	
	201W	
	271N	
	271NM	D
	271P	A
	271W	
Raypak	600915	B
Rheem	62-22441-01	A

a Table data is correct to the best of Honeywell's knowledge as of this publication's date. However, some appliances may have igniter applications that are beyond the capabilities of this kit.
b For igniters that require bracket A, use the template to determine the tab to be removed.
c For Carrier sealed combustion furnaces, you must use bracket E and retain the existing orange gasket for use with bracket E.

Manufacturer	OEM Part Number	Q3200U Bracket[b]
Roberts Gordon	90434300	B
	90436600	A
Robertshaw	41-402	A
	41-403	B
	41-404	
	41-405	A
	41-407	B
	41-408	A
	41-409	B
	41-410	A
	41-412	D
	41-418	C
Snyder General	1380654	B
	1380672	
	1380680	
Superior Fireplace	94851	A
Tempstar	1096048	D
Trane	340039P01	A
	B138196P01	B
	B144676P01	A
	B144676P02	B
	B340039P01	A
	IGN23	
	IGN26	B
	IGN30	
	IGN34	A
Viessman	9302-094	A
Wayne Home Equip.	62821-001	A
	62821-002	
Weil McLain	511-330-139	B
	511-330-190	
	511-330-193	
White LB	120-07549	A
White-Rodgers	767A-301	A
	767A-303	F
	767A-306	A
	767A-311	
	767A-350	
	767A-353	F
	767A-354	A
	767A-357	F
	767A-361	A
	767A-364	
	767A-366	
	767A-370	B
	767A-371	A
	767A-372	
	767A-373	D
	767A-376	B
	767A-377	A
	767A-382	B
Williamson	9050	A
York	025-27766-000	A
	025-27774-000	A
	025-29043-000	A
	025-29050-000	A

a Table data is correct to the best of Honeywell's knowledge as of this publication's date. However, some appliances may have igniter applications that are beyond the capabilities of this kit.
b For igniters that require bracket A, use the template to determine the tab to be removed.
c For Carrier sealed combustion furnaces, you must use bracket E and retain the existing orange gasket for use with bracket E.

Q3200 Glowfly™ Universal Hot Surface Igniter Kit

The Q3200U Universal Hot Surface Igniter Kit is designed to provide a robust field service replacement igniter, in gas fired appliances with Norton/St Gobain 120 VAC, silicon carbide, hot surface igniters. Includes six brackets and accessories.

- Replaces over 110 OEM igniter models
- Each igniter package includes cross reference instructions, six brackets, and installation accessories.
- Robust Silicon nitride igniter construction
- Igniter application templates enable quick bracket selection.

Application: Remote flame sense appliance applications only
Voltage: 120 Vac
Mounting: Multiple brackets to adapt as field replacement of Norton / St. Gobain / CoorsTek silicon carbide igniters
Temperature Ratings: Lead Wire Maximum - 428°F (Lead Wire Maximum - 250°C)
Length: Lead wire Length - 15 in.
Includes: High temperature ceramic wire nuts

Material Number	Description
Q3200U1004/U	This Glowfly™ Universal Hot Surface Igniter kit, in service pack of single kit
Q3200U2002/U	This Glowfly™ Universal Hot Surface Igniter kit in service pack of 6 kits

Q347 Direct Spark Igniter

The Q347 Igniter is used in direct spark applications. It provides a spark to ignite the main burner flame.

- Includes inner Kanthal electrode with ceramic insulator, bracket and Kanthal ground strap.
- Use with S87C, D, K; S89E, F and Q354A.

Application: Ignitor Only
Approvals, CSA: 112395

Material Number	Length	Mounting	Rod Angle
Q347A1004/U	2 1/32 in. (52 mm)	Bracket Style D; One 3/16 in. (5 mm) slot, three 3/16 in. (5 mm) untapped screw holes	standard orientation
Q347A1012/U	2 1/32 in. (52 mm)	Bracket Style D; One 3/16 in. (5 mm) slot, three 3/16 in. (5 mm) untapped screw holes	90 degree angle

Q354 Direct Spark Sensor

The Honeywell Q354 Flame Sensor proves the presence of main burner flame in direct spark applications.

- Includes Kanthal rod supported by ceramic insulator and mounting bracket.
- Use with S825, S87C, D, K or S89E, F.

Application: Sensor Only
Approvals, CSA: 112395

Material Number	Length	Mounting	Rod Angle
Q354A1018/U	6 3/8 in. (162 mm)	One 3/16 in. slot, three 3/16 in. untapped screw holes.	Straight

Q4100 Silicon Carbide Hot Surface Igniter

Q4100C9068
Q4100C9070

Q4100C9040
Q4100C9052
Q4100C9056

Q4100C9040
Q4100C9046
Q4100C9054
Q4100C9058

Q4100C9042
Q4100C9044

Q4100C9050

Bracket A

Bracket B

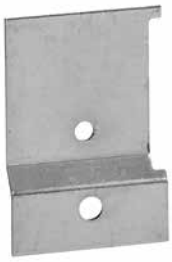

Bracket C

Bracket D

Bracket E

Honeywell offers a full line of 120 V direct replacement silicon carbide igniters. Q4100 igniters work with most configurations of element shapes, brackets, connectors, and lead wire lengths. Honeywell igniters are made in the USA and backed by a 2-year warranty.

Application: Ignitor
Type of Gas: Natural; LP
Voltage: 120 V

Temperature Ratings: 392°C (200°C)
Tradeline Value: Tradeline

Material Number	Connection Type	Wiring Terminal Type	Mounting	Length	Includes
Q4100C9040/U	Receptacle with .093" male pins	Receptacle with .093" male pins	wide ceramic	5-1/4 in. (133 mm)	
Q4100C9042/U	Molex internally keyed connector with .084 pins	Molex internally keyed connector with .084 pins	Standard with rib on right edge	5-1/2 in. (140 mm)	
Q4100C9044/U	Receptacle with .093" male pins	Receptacle with .093" male pins	Standard with rib on right edge	6 in. (152 mm)	
Q4100C9046/U	Stripped ends	Stripped ends	Standard with rib on right edge plus bracket	19-1/8 in. (486 mm)	
Q4100C9048/U	Receptacle with .093" male pins	Receptacle with .093" male pins	Round	5-1/4 in. (133 mm)	Mounting Bracket
Q4100C9050/U	Stripped ends	Stripped ends	Standard with rib on right edge plus 3 brackets	11 in. (279 mm)	
Q4100C9052/U	Molex front lock connector with .092 male pins	Molex front lock connector with .092 male pins	Standard with rib offset from left edge	5 in. (127 mm)	
Q4100C9054/U	Molex side lock connector with .092 male pins	Molex side lock connector with .092 male pins	Standard with rib offset from left edge	5-1/4 in. (133 mm)	
Q4100C9056/U	Receptacle with .093" male pins	Receptacle with .093" male pins	Standard with rib offset from left edge	5-1/4 in. (133 mm)	
Q4100C9058/U	Molex front lock connector with .092 male pins	Molex front lock connector with .092 male pins		4-1/2 in. (114 mm)	
Q4100C9060/U	Molex side lock connector with .092 male pins	Molex side lock connector with .092 male pins		5-1/4 in. (133 mm)	Standard with rib on right edge
Q4100C9062/U	Receptacle with .093" male pins	Receptacle with .093" male pins		5-1/4 in. (133 mm)	Mounting Bracket
Q4100C9064/U	1/4" female QC terminals	1/4" female QC terminals		1-3/8 in. (35 mm)	
Q4100C9066/U	Receptacle with .093" male pins	Receptacle with .093" male pins		5-1/4 in. (133 mm)	Three Standard Brackets
Q4100C9068/U	Receptacle with .093" male pins	Receptacle with .093" male pins		5-1/4 in. (133 mm)	
Q4100C9070/U	1/4" female QC terminals	1/4" female QC terminals		5-11/16 in. (144 mm)	
Q4100C9072/U	Amp 1-480699-0 connector housing with .093" male pins	Amp 1-480699-0 connector housing with .093" male pins		5-5/16 in. (135 mm)	

Airflow Differential Pressure Switch

Airflow Differential Pressure Switches are used to sense positive, negative, or differential air pressure in HVAC systems. They provide high or low limit with alarm or high limit shutdown with manual reset.

- Models available with compression or barb fittings.
- Electrical switch enclosed in metal box with cover.
- Reliable pneumatic operation.
- Adjustable setpoint.
- UL, CSA and FM Approved

Maximum Operating Pressure: 1/2 psi
Approximate, Dimensions: -40°F to +190°F (-40°C to +88°C)
Ambient Temperature Range: 5.0 in. Diameter (127 mm Diameter)
Approvals, Underwriters Laboratories Inc: MFHX2.MP2168
Approvals, CSA: CSA International: 112395
Approvals, Factory Mutual: Approved

Dimensions in inches (millimeters)

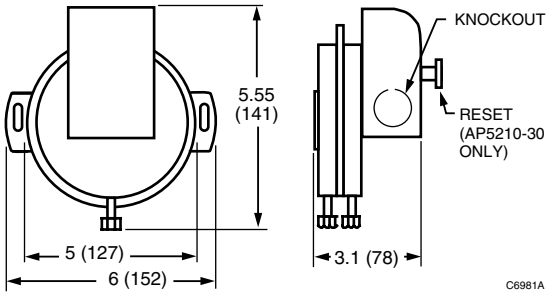

Material Number	Connection Type	Electrical Switch	Electrical Connections	Pilot Duty Ratings	Electrical Ratings	Setpoint	Additional Features
AP5027-30/U	1/4 in. Compression	SPDT	#6-32 Screw terminal with cup washers	10 Milliamps @ 5Vdc; Gold Flash Contacts; 15 Amps resistive to 277Vac	278 Va @ 24 Vac; 300 Va @ 120 to 277 Vac	.05"±.02" wc to 12.0" wc PR	Switching Differential: .02"±.01" wc @ minimum set point to approximately .80" wc @ maximum setpoint
AP5208-30/U	1/4 in. Barbed	SPDT	#6-32 Screw terminal with cup washers	10 Milliamps @ 5Vdc; Gold Flash Contacts; 15 Amps resistive to 277Vac	278 Va @ 24 Vac; 300 Va @ 120 to 277 Vac	.05"±.02" wc to 12.0" wc PR	Switching Differential: .02"±.01" wc @ minimum set point to approximately .80" wc @ maximum setpoint
AP5210-30/U	1/4 in. Compression	SPNC	#8-32 Screw terminal with cup washers	–	278 Va @ 24 Vac; 300 Va @ 120 to 277 Vac	.30"±.20" wc to 12.0" wc PR	Manual Reset

ST9103 Electronic Fan Timers

ST9103A integrates control of burner and circulating fan operations in an oil furnace. Two speed circulator for oil appliances. Isolated line voltage limit interface and isolated relay connection to oil primary.

- Central appliance wiring point simplifies service
- Oil burner primary control
- Fixed or field-adjustable heat fan on delay
- Field adjustable heat fan off delay
- Controls two speed circulating fan

Application: A single circuit board providing combustion air blower control, two speed circulating air blower control, oil primary control, limit circuit inputs, thermostat wiring terminations, & a central appliance wiring point for an oil fixed furnace.
Electrical Ratings: 18 to 30 Vac
Frequency: 50 Hz; 60 Hz
Approvals, Underwriters Laboratories Inc: Listed: Report MP466
Approvals, CSA: Certified: File No. LR95329-17

Material Number	Heat Fan On Delay	Heat Fan Off Delay	Cool Fan On Delay	Cool Fan Off Delay	Ambient Temperature Range	Replaces
ST9103A1002/U	fixed, 45 sec	adj. 60, 90, 120, 150 sec (set at 150 sec)	fixed 0 sec	fixed 0 sec	-40°F to +150°F (-40°C to +66°C)	ST9103A1002

ST9120 Universal Electronic Fan Timers

Universal electronic fan control for gas furnaces, replaces multiple Honeywell models. Includes instructions and special wire harnesses for easy replacement.

- Replaces 40+ existing Honeywell electronic fan timers
- Instruction sheet supplies full cross reference and wiring guide
- Interface harnesses for simple conversion
- Integrates control of all combustion blower and circulating fan operations in gas warm-air appliance
- Replaceable fuse
- DIP switch selectable heat and cool delay on and off times
- LED lights for easy diagnostics
- Electronic air cleaner and humidifier terminal connections
- Continuous low speed indoor air circulation

Application: Integrates control of combustion blower and circulating fan operations for a gas warm air appliance
Electrical Ratings: 18 to 30 Vac
Frequency: 50 Hz; 60 Hz
Approvals, Underwriters Laboratories Inc: Listed: Report MP466
Approvals, CSA: Certified: File No. LR95329-17
Tradeline Value: Universal

Material Number	Heat Fan On Delay	Heat Fan Off Delay	Cool Fan On Delay	Cool Fan Off Delay	Ambient Temperature Range	Replaces
ST9120U1011/U	adj. 30, 60 sec (set at 30 sec)	adj. 60, 120, 150, 180 sec (set at 120 sec)	adj. 4, 30 sec (set at 4 sec)	adj. 30, 60 sec (set at 30 sec)	-40°F to +175°F (-40°C to +79°C)	all ST9101's, all ST9120's, all ST9141's, and all ST9160's

PowerPro Definite Purpose Contactors

The Tougher Contactors

We're tougher than ever. Honeywell PowerPro, a line of definite purpose contactors, out-features, out-performs and is destined to soon out-sell the competition.

Once you compare the features of Honeywell PowerPro definite purpose contactors against what you're using now, we predict you'll soon standardize on PowerPro for all your applications. Especially in high stakes' situations where you can't afford to gamble on anything less.

Honeywell PowerPro definite purpose contactors will surprise you in more ways than one. Once you try them you'll be amazed at how these compact contactors easily fit in tight spaces while leaving maneuvering room for hands and tools; how easily contactor accessories snap on or off; how you view the operation of the contactor with the user-friendly button; plus many other installer-friendly features

- **Honeywell PowerPro Contactors Meet ARI Standard 780**—Meeting the ARI Standard 780 means that the contactors stand up to tests that simulate harsh, real-world conditions—500,000 cycle mechanical life test, 200,000 cycle endurance life test and 10,000 cycle recycle life test.
- **Contactors are shorter and sweeter than the competition**—Their small size makes them ideal for replacement inside today's compact equipment.
- **Advanced class H insulated contactor coil design protects against high heat conditions**—Class H contactor coils are standard on all Honeywell Contactors.
- **Convenient button for easy testing**—Use it to safely check for proper electrical functioning of the contactor.

DP Contactors Order Number Guide

It's easy to select the order number that you need for your application. Depending on your application, determine the number of poles, amp rating, coil voltage, and whether you need an economy or deluxe model. Then, simply follow this Order Number Guide:

Product Identifier
Definite Purpose Contactor

Pole Identifier	Number of Poles
0	1 pole without shunt
1	1 pole with shunt
2	2 poles
3	3 poles
4	4 poles

Series Indentifier	Type
1000-4999	Economy
5000 and up	Deluxe PowerPro™ ARI-780 rated

DP 3 040 B 5001

Amperage Identifier	Amperage Rating
020	20 Amps
025	25 Amps
030	30 Amps
040	40 Amps
050	50 Amps
060	60 Amps
075	75 Amps
090	90 Amps
120	120 Amps

Coll Identifier	Coil Voltage
A	24 Vac
B	120 Vac
C	208/240 Vac
D	277 Vac
E	480 Vac
F	600 Vac

M14500

NOTE: Super Tradeline Contactors contain extra mounting hardware.

Deluxe Honeywell PowerPro DP-Series Definite Purpose Contactors - 1 Pole

These electromagnetically-operated Definite Purpose Contactors provide switching for starting induction motors.

- Meets ARI-780 Standard at started ratings (500,000 cycle mechanical life, 200,000 cycle electrical life and 10,000 cycle recycle life); the most demanding ARI requirement.
- Silver cadmium oxide contacts provide long life under demanding duty cycles.
- Low profile design allows for more wiring room.
- Multiple mounting holes and slots for convenient, interchangeable mounting with most competitive devices.

Application: PowerPro Definite Purpose Contactor
Frequency: 50 Hz; 60 Hz
Temperature Ratings: -4°F to +149°F (-20°C to +65°C)

Approvals, CSA: Certified: File No. LR6535
Approvals, Underwriters Laboratories Inc.: Component Recognized: File No. 14480, Guide No. NLDX2

Material Number	Poles	Switching	Coil Ratings Voltage	Contact Connections (coil)	Electrical Connections	Contact Ratings (AFL)	Contact Ratings (resistive)
DP1025A5006/U	1 with shunt	SPST	24 Vac	1/4 in. quick-connects	lug connectors	25 A @ 240/277 Vac	30 A @ 240/277 Vac, 480 Vac, 600 Vac
DP1030A5014/U	1	SPST	24 Vac	1/4 in. quick-connects	lug connectors	30 A @ 240/277 Vac	48 A @ 240/277 Vac
DP1040A5005/U	1		24 Vac	1/4 in. quick-connects	lug connectors	40 A @ 240/277 Vac	50 A @ 240/277 Vac

Dimensions in inches (millimeters) for 1 pole contactor without shunt

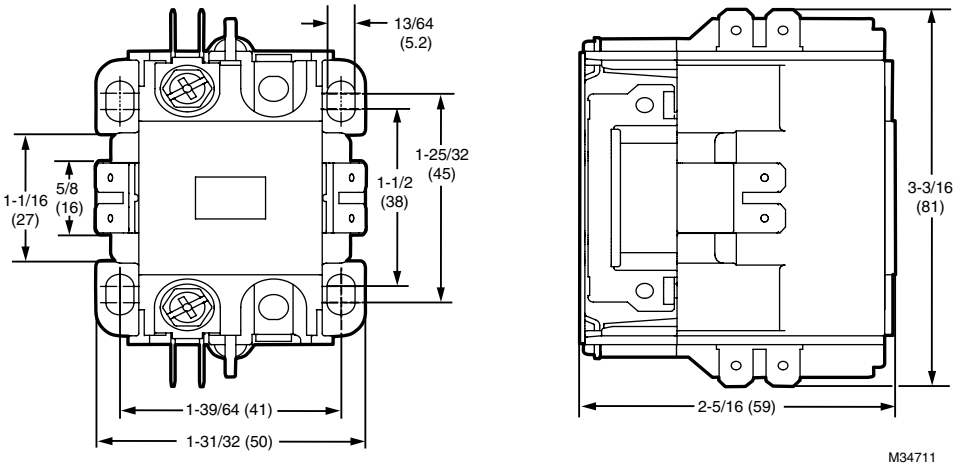

Deluxe Honeywell PowerPro DP-Series Definite Purpose Contactors - 2 Pole

These electromagnetically-operated Definite Purpose Contactors provide switching for starting induction motors.

- Meets ARI-780 Standard at started ratings (500,000 cycle mechanical life, 200,000 cycle electrical life and 10,000 cycle recycle life); the most demanding ARI requirement.
- Silver cadmium oxide contacts provide long life under demanding duty cycles.
- Low profile design allows for more wiring room.
- Multiple mounting holes and slots for convenient, interchangeable mounting with most competitive devices.

Application: PowerPro Definite Purpose Contactor
Frequency: 50 Hz; 60 Hz
Switching: DPST
Temperature Ratings: -4°F to +149°F (-20°C to +65°C)

Approvals, CSA: Certified: File No. LR6535
Approvals, Underwriters Laboratories Inc.: Component Recognized: File No. 14480, Guide No. NLDX2

Material Number	Poles	Coil Ratings Voltage	Contact Connections (coil)	Electrical Connections	Contact Ratings (AFL)	Contact Ratings (resistive)
DP2020A5022/U	2	24 Vac	1/4 in. quick-connects	lug connectors	30 A @ 240, 277, 480, 600 Vac	25 A @ 240/277 Vac, 480 Vac, 600 Vac
DP2020B5039/U	2	120 Vac	1/4 in. quick-connects	lug connectors	20 A @ 240, 277, 480, 600 Vac	25 A @ 240/277 Vac, 480 Vac, 600 Vac
DP2030A5013/U	2	24 Vac	1/4 in. quick-connects	lug connectors	30 A @ 240/277 Vac	40 A @ 240/277 Vac
DP2030B5004/U	2	120 Vac	1/4 in. quick-connects	lug connectors	30 A @ 240/277 Vac	40 A @ 240/277 Vac, 480 Vac, 600 Vac
DP2030B5012/U	2	120 Vac	1/4 in. quick-connects	lug connectors	30 A @ 240/277 Vac	40 A @ 240/277 Vac, 480 Vac, 600 Vac
DP2030C5003/U	2	208 Vac/240 Vac	1/4 in. quick-connects	lug connectors	30 A @ 240/277 Vac	40 A @ 240/277 Vac, 480 Vac, 600 Vac
DP2030C5011/U	2	208 Vac/240 Vac	1/4 in. quick-connects	lug connectors	30 A @ 240/277 Vac	40 A @ 240/277 Vac, 480 Vac, 600 Vac
DP2030D5002/U	2	277 Vac	1/4 in. quick-connects	lug connectors	30 A @ 240/277 Vac	40 A @ 240/277 Vac, 480 Vac, 600 Vac
DP2040A5004/U	2	24 Vac	1/4 in. quick-connects	lug connectors	40 A @ 240/277 Vac	48 A @ 240/277 Vac
DP2040B5003/U	2	120 Vac	1/4 in. quick-connects	lug connectors	40 A @ 240/277 Vac	50 A @ 240/277 Vac
DP2040C5002/U	2	208 Vac/240 Vac	1/4 in. quick-connects	lug connectors	40 A @ 240/277 Vac	50 A @ 240/277 Vac

Dimensions in inches (millimeters) for 2 Pole 25- 40 Amp Contactor

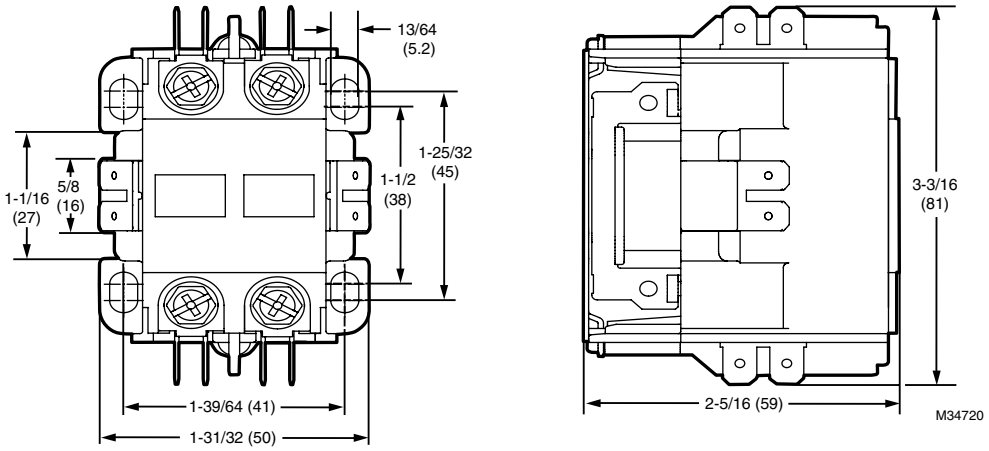

Deluxe Honeywell PowerPro DP-Series Definite Purpose Contactors - 3 Pole

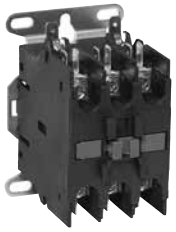

These three pole definite purpose electromagnetically operated contactors provide switching for starting of induction motors.

- Meet the most demanding ARI requirement, ARI-780 Standard.
- Class H high temperature insulated coils are standard on 3 pole contactors.
- Shrouded coils on 3 pole (25A to 60A) models protect the coil from harsh environment factors.
- Multiple mounting holes and slots for convenient, interchangeable mounting with most competitive devices.
- Full array of replacement coils, contact sets and accessories available.

Application: PowerPro Definite Purpose Contactor
Frequency: 50 Hz; 60 Hz
Switching: DPST
Temperature Ratings: -4°F to +149°F (-20°C to +65°C)
Approvals, CSA: Certified: File No. LR6535
Approvals, Underwriters Laboratories Inc.: Component Recognized: File No. 14480, Guide No. NLDX2

Material Number	Poles	Coil Ratings Voltage	Contact Connections (coil)	Electrical Connections	Contact Ratings (AFL)	Contact Ratings (resistive)
DP3030A5004/U	3	24 Vac	1/4 in. quick-connects and #6 screws	lug connectors	30 A @ 240/277 Vac, 480 Vac, 600 Vac	40 A @ 240/277 Vac, 480 Vac, 600 Vac
DP3030B5003/U	3	120 Vac	1/4 in. quick-connects and #6 screws	lug connectors	30 A @ 240/277 Vac, 480 Vac, 600 Vac	40 A @ 240/277 Vac, 480 Vac, 600 Vac
DP3030C5002/U	3	208 Vac/240 Vac	1/4 in. quick-connects and #6 screws	lug connectors	30 A @ 240/277 Vac, 480 Vac, 600 Vac	40 A @ 240/277 Vac, 480 Vac, 600 Vac
DP3040A5003/U	3	24 Vac	1/4 in. quick-connects and #6 screws	lug connectors	40 A @ 240/277 Vac, 480 Vac, 600 Vac	50 A @ 240/277 Vac, 480 Vac, 600 Vac
DP3040B5002/U	3	120 Vac	1/4 in. quick-connects and #6 screws	lug connectors	40 A @ 240/277 Vac, 480 Vac, 600 Vac	50 A @ 240/277 Vac, 480 Vac, 600 Vac
DP3040C5001/U	3	208 Vac/240 Vac	1/4 in. quick-connects and #6 screws	lug connectors	40 A @ 240/277 Vac, 480 Vac, 600 Vac	50 A @ 240/277 Vac, 480 Vac, 600 Vac
DP3050A5002/U	3	24 Vac	1/4 in. quick-connects and #6 screws	lug connectors	40 A @ 240/277 Vac, 480 Vac, 600 Vac	50 A @ 240/277 Vac, 480 Vac, 600 Vac
DP3050B5001/U	3	120 Vac	1/4 in. quick-connects and #6 screws	lug connectors	50 A @ 240/277 Vac, 480 Vac, 600 Vac	63 A @ 240/277 Vac, 480 Vac, 600 Vac
DP3050C5010/U	3	208 Vac/240 Vac	1/4 in. quick-connects and #6 screws	lug connectors	50 A @ 240/277 Vac, 480 Vac, 600 Vac	63 A @ 240/277 Vac, 480 Vac, 600 Vac
DP3060A5001/U	3	24 Vac	1/4 in. quick-connects and #6 screws	lug connectors	60 A @ 240/277 Vac, 480 Vac, 600 Vac	75 A @ 277 Vac, 480 Vac, 600 Vac
DP3060B5010/U	3	120 Vac	1/4 in. quick-connects and #6 screws	lug connectors	60 A @ 240/277 Vac, 480 Vac, 600 Vac	75 A @ 277 Vac, 480 Vac, 600 Vac
DP3060C5009/U	3	208 Vac/240 Vac	1/4 in. quick-connects and #6 screws	lug connectors	60 A @ 240/277 Vac, 480 Vac, 600 Vac	75 A @ 277 Vac, 480 Vac, 600 Vac
DP3075A5017/U	3	24 Vac	1/4 in. quick-connects and #6 screws	lug connectors	75 A @ 240/277 Vac, 480 Vac, 600 Vac	94 A @ 240/277 Vac, 480 Vac, 600 Vac
DP3075B5016/U	3	120 Vac	1/4 in. quick-connects and #6 screws	lug connectors	75 A @ 240/277 Vac, 480 Vac, 600 Vac	94 A @ 240/277 Vac, 480 Vac, 600 Vac
DP3075C5015/U	3	208 Vac/240 Vac	1/4 in. quick-connects and #6 screws	lug connectors	75 A @ 240/277 Vac, 480 Vac, 600 Vac	94 A @ 240/277 Vac, 480 Vac, 600 Vac
DP3090B5007/U	3	120 Vac	1/4 in. quick-connects and #6 screws	lug connectors	90 A @ 240/277 Vac, 480 Vac, 600 Vac	120 A @ 240/277 Vac, 480 Vac, 600 Vac
DP3090C5006/U	3	208 Vac/240 Vac	1/4 in. quick-connects and #6 screws	lug connectors	90 A @ 240/277 Vac, 480 Vac, 600 Vac	120 A @ 240/277 Vac, 480 Vac, 600 Vac

Dimensions in inches (millimeters) for 3 pole 25 to 40 amp contactors

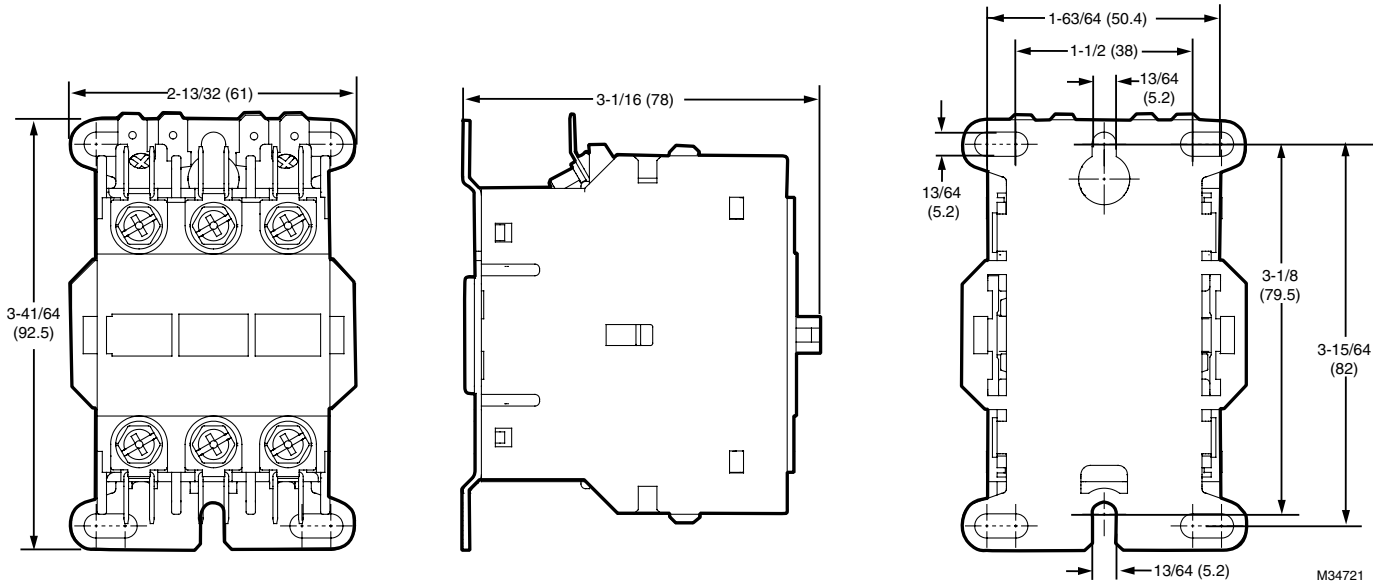

Deluxe Honeywell PowerPro DP-Series Definite Purpose Contactors - 4 Pole

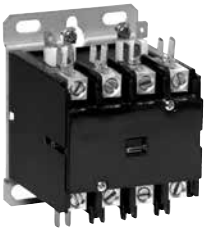

Definite purpose four (40A) pole contactors provide switching for across-the-line starting of induction motors.

- Shrouded coils on 3 pole (25A to 60A) models protect the coil from harsh environment factors.
- Moisture proof epoxy is used to encapsulate the 3 pole 75A through 120A coils.
- Multiple mounting holes and slots for convenient, interchangeable mounting with most competitive devices.
- Traditional design meets many needs.
- Full array of replacement coils, contact sets and accessories available.

Application: PowerPro Definite Purpose Contactor
Frequency: 50 Hz; 60 Hz
Switching: DPST
Temperature Ratings: -4°F to +149°F (-20°C to +65°C)

Approvals, CSA: Certified: File No. LR6535
Approvals, Underwriters Laboratories Inc.: Component Recognized: File No. 14480, Guide No. NLDX2

Material Number	Poles	Coil Ratings Voltage	Contact Connections (coil)	Electrical Connections	Contact Ratings (AFL)	Contact Ratings (resistive)
DP4040A5002/U	4	24 Vac	1/4 in. quick-connects and #6 screws	lug connectors	40 A @ 240/277 Vac, 480 Vac, 600 Vac	50 A @ 240/277 Vac, 480 Vac, 600 Vac
DP4040B5001/U	4	120 Vac	1/4 in. quick-connects and #6 screws	lug connectors	40 A @ 240/277 Vac, 480 Vac, 600 Vac	50 A @ 240/277 Vac, 480 Vac, 600 Vac
DP4040C5010/U	4	208 Vac/240 Vac	1/4 in. quick-connects and #6 screws	lug connectors	40 A @ 240/277 Vac, 480 Vac, 600 Vac	50 A @ 240/277 Vac, 480 Vac, 600 Vac

Dimensions in inches (millimeters) for 4 pole 40 amp contactors

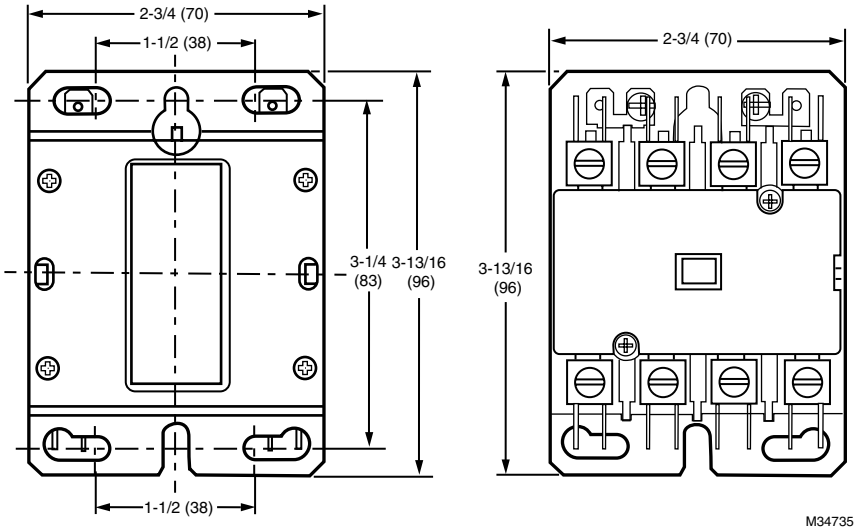

Economy DP-Series Definite Purpose Contactors - 1 Pole

These electromagnetically-operated Definite Purpose Contactors provide switching for starting induction motors.

- Silver cadmium oxide contacts provide long life under demanding duty cycles.
- Low profile design allows for more wiring room.
- Multiple mounting holes and slots for convenient, interchangeable mounting with most competitive devices.

Application: Economy Definite Purpose Contactor
Frequency: 50 Hz; 60 Hz
Switching: SPST
Temperature Ratings: -4°F to +149°F (-20°C to +65°C)

Approvals, CSA: Certified: File No. LR6535
Approvals, Underwriters Laboratories Inc.: Component Recognized: File No. 14480, Guide No. NLDX2

Material Number	Poles	Coil Ratings Voltage	Contact Connections (coil)	Electrical Connections	Contact Ratings (AFL)	Contact Ratings (resistive)
DP1030A1001/U	1	24 Vac	1/4 in. quick-connects	#10-32 combination head screws	30 amps @ 240, 277, 480, 600 Vac	40 amps @ 240, 277, 480, 600 Vac

Economy DP-Series Definite Purpose Contactors - 2 Pole

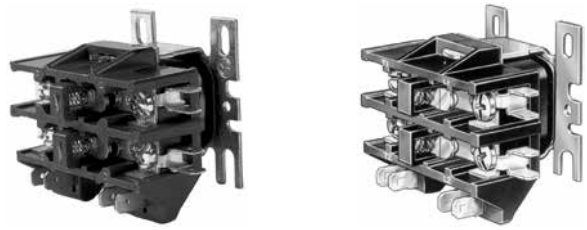

These electromagnetically-operated Definite Purpose Contactors provide switching for starting induction motors.

- Silver cadmium oxide contacts provide long life under demanding duty cycles.
- Low profile design allows for more wiring room.
- Multiple mounting holes and slots for convenient, interchangeable mounting with most competitive devices.

Application: Economy Definite Purpose Contactor
Frequency: 50 Hz; 60 Hz
Switching: DPST
Temperature Ratings: -4°F to +149°F (-20°C to +65°C)

Approvals, CSA: Certified: File No. LR6535
Approvals, Underwriters Laboratories Inc.: Component Recognized: File No. 14480, Guide No. NLDX2

Material Number	Poles	Coil Ratings Voltage	Contact Connections (coil)	Electrical Connections	Contact Ratings (AFL)	Contact Ratings (resistive)	Approximate, Dimensions
DP2030A1004/U	2	24 Vac	1/4 in. quick-connects	#10-32 combination head screws	30 A @ 240/277 Vac	40 A @ 240/277 Vac, 480 Vac, 600 Vac	3.25 in. high x 3.63 in. wide x 3.8 in. deep (83 mm high x 92 mm wide x 97 mm deep)
DP2030B1003/U	2	120 Vac	1/4 in. quick-connects	#10-32 combination head screws	30 A @ 240/277 Vac, 480 Vac, 600 Vac	40 A @ 240/277 Vac, 480 Vac, 600 Vac	2.2 in. high x 3.31 in. wide x 2.17 in. deep (56 mm high x 84 mm wide x 55 mm deep)
DP2030C1002/U	2	208 Vac/240 Vac	1/4 in. quick-connects	#10-32 combination head screws	30 A @ 240/277 Vac, 480 Vac, 600 Vac	40 A @ 240/277 Vac, 480 Vac, 600 Vac	2.2 in. high x 2.5 in. wide x 3.31 in. deep (56 mm high x 59 mm wide x 84 mm deep)
DP2040A1003/U	2	24 Vac	1/4 in. quick-connects	#10-32 combination head screws	40 A @ 240/277 Vac, 480 Vac, 600 Vac	50 A @ 240/277 Vac, 480 Vac, 600 Vac	2.37 in. high x 3.3 in. wide x 2 in. deep (60 mm high x 84 mm wide x 51 mm deep)
DP2040B1002/U	2	120 Vac	1/4 in. quick-connects	#10-32 combination head screws	40 A @ 240/277 Vac, 480 Vac, 600 Vac	50 A @ 240/277 Vac, 480 Vac, 600 Vac	2.37 in. high x 3.3 in. wide x 2 in. deep (60 mm high x 84 mm wide x 51 mm deep)
DP2040C1001/U	2	208 Vac/240 Vac	1/4 in. quick-connects	#10-32 combination head screws	40 A @ 240/277 Vac, 480 Vac, 600 Vac	50 A @ 240/277 Vac, 480 Vac, 600 Vac	2.37 in. high x 3.3 in. wide x 2 in. deep (60 mm high x 84 mm wide x 51 mm deep)

Auxiliary Switches

Application: Auxiliary Interlock
Contact Ratings (resistive): 10.0 A
Approximate, Dimensions: 2 13/16 in. x 2 1/2 in. x 7/16 in. (77 mm x 64 mm x 11 mm)
Current Ratings: 60/30/15/12 Amps (Maximum (Inrush) at 120V/240V/480V/600V)

Material Number	Description	Configuration	Circuits	Used With
DP3AUX-1NC/U	This is a 1 Normally Closed Snap-on side mounted auxiliary interlock	Normally Closed snap-on	1	DP3060; DP3050; DP3040; DP3030; DP3090; DP3075
DP3AUX-1NO/U	This is a 1 Normally Open Snap-on side mounted auxiliary interlock	Normally Open snap-on	1	DP3030; DP3040; DP3050; DP3060; DP3075; DP3090
DP3AUX-1NO-1NC/U	This is a 1 Normally Open/1 Normally Closed Snap-on side mounted auxiliary interlock	Normally Open/Normally Closed snap-on	2	DP3030; DP3040; DP3050; DP3060; DP3075; DP3090
DP3AUX-2NC/U	This is a 2 Normally Closed Snap-on side mounted auxiliary interlock	Normally Closed snap-on	2	DP3030; DP3040; DP3050; DP3060; DP3075; DP3090
DP3AUX-2NO/U	This is a 2 Normally Open Snap-on side mounted auxiliary interlock	Normally Open snap-on	2	DP3060; DP3050; DP3040; DP3030; DP3090; DP3075

R8246 Electric Heat Contactor

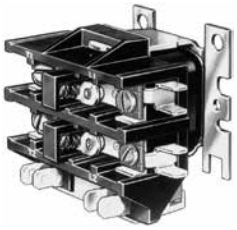

Provides conventional on-off control of heating elements and fan in an electric furnace.

- Designed for quiet operation. R8246A and R8229A replace over 50 Honeywell and competitive electric heat primaries, including the Honeywell R8330 Electric Furnace Sequencer.
- Use on furnaces with a line voltage or pilot duty limit.
- Simple ON-OFF switching - readily understood and easily serviced-Eliminates cold drafts on system startup.

Application: Electric Heat Contactor
Temperature Ratings: -4°F to +149°F (-20°C to +65°C)
Tradeline Value: Tradeline

Material Number	Poles	Coil Ratings Voltage	Contact Connections (coil)	Electrical Connections	Contact Ratings (resistive)	Approximate, Dimensions
R8246A1038/U	2	24 Vac	No. 10 terminal clamp screws and double male 1/4 inch quick-connects	Male 1/4 in. (6 mm) quick-connects plus terminal clamp screws	48 A @ 240/277 Vac 1st pole resistive only	2 3/16 in. high x 2 5/16 in. wide x 3 5/16 in. deep (56 mm high x 58 mm wide x 84 mm deep)

Contactors Selection Guide

Economy Contactors							
Poles	**Contact Ratings (AFL @ 240, 277, 480, 600 Vac)**	**Input Voltage/Coil Voltage**	**Product Number**	**Main Connections**	**Coil Connections**	**Contact Ratings (Resistive @ 240, 277, 480, 600 Vac)**	**Switching**
1	30A	24 Vac	DP1030A1001/U	CHS	Q	40A	SPST
2		24 Vac	DP2030A1004/U	CHS	Q	40A	DPST
		120 Vac	DP2030B1003/U	CHS	Q	40A	DPST
		208 Vac/240 Vac	DP2030C1002/U	CHS	Q	40A	DPST
	40A	24 Vac	DP2040A1003/U	CHS	Q	50A	DPST
		120 Vac	DP2040B1002/U	CHS	Q	50A	DPST
		208 Vac/240Vac	DP2040C1001/U	CHS	Q	50A	DPST

PowerPro Contactors - ARI 780/790 Rated							
Poles	**Contact Ratings (AFL @ 240, 277, 480, 600 Vac)**	**Input Voltage/Coil Voltage**	**Product Number**	**Main Connections**	**Coil Connections**	**Contact Ratings (Resistive @ 240, 277, 480, 600 Vac)**	**Switching**
1 with shunt	25A	24 Vac	DP1025A5006/U	LC	Q	30A	SPST
1	30A	24 Vac	DP1030A5014/U	LC	Q	48A	SPST
	40A	24 Vac	DP1040A5005/U	LC	Q	50A	SPST
2	30A	24 Vac	DP2020A5022/U	LC	Q	25A	DPST
	20A	120 Vac	DP2020B5039/U	LC	Q	25A	DPST
	30A	24 Vac	DP2030A5013/U	LC	Q	40A	DPST
		120 Vac	DP2030B5004/U	LC	Q	40A	DPST
		120 Vac	DP2030B5012/U	LC	Q	40A	DPST
		208 Vac/240 Vac	DP2030C5003/U	LC	Q	40A	DPST
		208 Vac/240 Vac	DP2030C5011/U	LC	Q	40A	DPST
		277 Vac	DP2030D5002/U	LC	Q	40A	DPST
	40	24 Vac	DP2040A5004/U	LC	Q	48A	DPST
		120 Vac	DP2040B5003/U	LC	Q	50A	DPST
		208 Vac/240 Vac	DP2040C5002/U	LC	Q	50A	DPST
3	30A	24V	DP3030A5004/U	LC	Q, CHS	40A	DPST
		120V	DP3030B5003/U	LC	Q, CHS	40A	DPST
		208 Vac/240 Vac	DP3030C5002/U	LC	Q, CHS	40A	DPST
	40A	24 Vac	DP3040A5003/U	LC	Q, CHS	50A	DPST
		120 Vac	DP3040B5002/U	LC	Q, CHS	50A	DPST
		208 Vac/240 Vac	DP3040C5001/U	LC	Q, CHS	50A	DPST
	50A	24 Vac	DP3050A5002/U	LC	Q, CHS	63A	DPST
		120 Vac	DP3050B5001/U	LC	Q, CHS	63A	DPST
		208 Vac/240 Vac	DP3050C5010/U	LC	Q, CHS	63A	DPST
	60A	24 Vac	DP3060A5001/U	LC	Q, CHS	75A	DPST
		120 Vac	DP3060B5010/U	LC	Q, CHS	75A	DPST
		208 Vac/240 Vac	DP3060C5009/U	LC	Q, CHS	75A	DPST
3	75A	24 Vac	DP3075A5017/U	LC	Q, CHS	94A	DPST
		120 Vac	DP3075B5016/U	LC	Q, CHS	94A	DPST
		208 Vac/240 Vac	DP3075C5015/U	LC	Q, CHS	94A	DPST
	90A	120 Vac	DP3090B5007/U	LC	Q, CHS	120A	DPST
		208 Vac/240 Vac	DP3090C5006/U	LC	Q, CHS	120A	DPST
4	40A	24 Vac	DP4040A5002/U	LC	Q, CHS	50A	DPST
		120 Vac	DP4040B5001/U	LC	Q, CHS	50A	DPST
		208 Vac/240 Vac	DP4040C5010/U	LC	Q, CHS	50A	DPST

Connectors Key
CHS - #10-32 Combination Head Screw
Q - Quick Connect
SS - Sems Screw
LC - Lug Connector
S - # 6 Screw
TCS - Terminal Clamp Screw

Temp Rating: -4°F to 149°F
Approvals: UL, CSA
ARI -780: 500,000 cycle mechanical life; 200,000 cycle electrical life; 10,000 cycle recycle life

Electric Heat Contactors

Electric Heat Contactor								
Poles	**Contact Ratings (AFL @ 240, 277, 480, 600 Vac)**	**Input Voltage/ Coil Voltage**	**Product Number**	**Dimensions (in.) H x W x D**	**Main Connections**	**Coil Connections**	**Contact Ratings (Resistive @ 240/277, 480, 600 Vac)**	**Special Features**
2	30	24 Vac	R8246A1038	2.2 x 2.3 x 3.3	Q, S	TCS, Q	48A @ 240/277 Vac	First Pole Resistive Only, Second Pole Resistive/Inductive Combined. ARI 780/790 rated.

Connectors Key
CHS - #10-32 Combination Head Screw
Q - Quick Connect
SS - Sems Screw
LC - Lug Connector
S - # 6 Screw
TCS - Terminal Clamp Screw

Temp Rating: -4°F to 149°F
Approvals: UL, CSA
ARI -780: 500,000 cycle mechanical life; 200,000 cycle electrical life; 10,000 cycle recycle life

Q633 Plate-Mounted Relay Receptacle

For installing R4222, R8222 and R4228, R8228 relays on junction boxes.

- Use with appropriate relay and AT72D1683 or AT72D1691 SUPER TRADELINE Transformer.
- Includes relay receptacle, cover and eight leadwires.

Approvals, CSA: Recognized
Approvals, Underwriters Laboratories Inc.: UL Component Recognized
Tradeline Value: Tradeline

Material Number	Approximate, Dimensions
Q633A1007/U	4 in. x 4 in. plate (102 x 102 mm plate)

R24 Heat Sequencer

Honeywell R24 Series Heat Sequencers are solid-state positive temperature coefficient (PTC) heaters that mount in any position. Quick-connect terminals speed up installation and the R24 Series Heaters conveniently replace a wide range of models.

- Solid-state PTC Heaters
- Quick-connect terminals
- Shock and vibration resistant
- Mounts in any position
- Contact ratings - to 25 Amps at 120 or 240 Volts, and 12.5 Amps at 480 Volts
- Full-load rating auxiliary contacts
- Standard operating ambience temperature between -40°C and 73.8°C (-40°F and 165°F)
- UL approved, CSA/CUR approval pending

Approvals, Underwriters Laboratories Inc.: UL File 237660

Input Voltage: 24V
Electrical Connections: Solder or screw type 1/4 in. quick connect
Contact Ratings (resistive): 25A Resistive and 14A Inductive at 120Vac

Material Number	Number of switches/devices	Number of on-timings	Timing Delay	Application
R24AA1008/U	1	1	On-timing – 1 to 20 sec: Off-timing – 40 to 110 sec	Electric Heat
R24AA2006/U	1	1	On-timing – 1 to 25: Heat: Off-timing – 65 to 115: Cool	Heat Pump - Air Handler
R24AA3004/U	1	1	On-timing – 30 to 90 sec: Off-timing – 1 to 30 sec	Electric Heat
R24BA1006/U	2	1	On-timing – 1 to 20 sec (first and second switch): Off-timing – 40 to 110 sec (first and second switch)	Electric Heat
R24BA3002/U	2	1	On-timing – 30 to 90 sec (first and second switch): Off-timing – 1 to 30 sec (first and second switch)	Electric Heat
R24CB4007/U	3	2	On-timing – 1 to 110 sec (first, second, and third switches): Off-timing – 1 to 110 sec (first, second, and third switches)	Electric Heat
R24DB4005/U	4	2	On-timing – 1 to 110 sec (first, second, third and fourth switches): Off-timing – 1 to 110 sec (first, second, third, and fourth switches)	Electric Heat
R24ED5007/U	5	4	On-timing – 1 to 160 sec (first, second, third, fourth and fifth switches): Off-timing – 1 to 160 sec (first, second, third, fourth and fifth switches)	Electric Heat

R4222; R8222 General Purpose and R8228 Heavy Duty Switching Relays

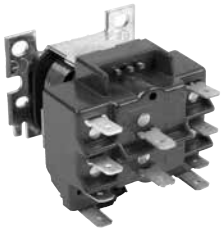

Provide general purpose switching for refrigeration and air conditioning equipment, appliances, vending machines and similar applications.

- Molded terminal numbers and circuit diagram on top of relay provide easy identification for wiring and checking system operation.
- Untaped coil assures cooler operation.
- Laminated magnet construction for higher efficiency.
- Base designed for easy replacement of competitive relays.
- Plug compatible with Steveco 90-340 and Mars 90340.

Electrical Connections: R4222, R8222, R8228D have single quick-connects on poles, double quick-connects on coil terminals; R8228B have double quick-connects on poles and double quick-connects on coil terminals
Frequency: 50 Hz; 60 Hz
Pilot Duty Ratings: For all models EXCEPT R8228 - Minimum: 3 VA @ 24 Vac, 120 Vac, & 480 Vac; Maximum: 25 VA @ 24 Vac, 125 VA @ 120 Vac, 240 Vac, & 480 Vac; Resistive: 3 A @ 277 Vac (0.75 power factor); PowerPile: (Normally Open Contacts Only) 0.25 A @ 0.25 to 12 Vdc
Temperature Ratings: -20°F to +150°F (-29°C to +66°C)
Approximate, Dimensions: 1 7/8 in. high x 2 5/32 in. wide x 2 3/8 in. deep (48 mm high x 55 mm wide x 60 mm deep.)
Approvals, CSA: Certified: File No. LR35066, Guide No. 184-N-13.13
Approvals, Underwriters Laboratories Inc.: UL Listed: File No. E49809, Guide No. NKCR2

Accessories:
129384A/U – Case and Cover Assembly

Material Number	Switching	Coil Ratings Voltage	Contact Ratings (AFL)	Contact Ratings (AIR)	Contact Ratings (resistive)	Tradeline Value
R4222B1082/U	SPDT	120 V	3 A @ 480 Vac; 6 A @ 208 Vac, 240 Vac, 277 Vac; 12 A @ 120 Vac	18 A @ 480 Vac; 35 A @ 208 Vac, 240 Vac, 277 Vac, 60 A @ 120 Vac	10 A @ 480 Vac; 20.8 A @ 120 Vac, 208 Vac, 240 Vac, 277 Vac	Tradeline
R4222D1013/U	DPDT	120 V	3 A @ 480 Vac; 6 A @ 208 Vac, 240 Vac, 277 Vac; 12 A @ 120 Vac	18 A @ 480 Vac; 35 A @ 208 Vac, 240 Vac, 277 Vac, 60 A @ 120 Vac	10 A @ 480 Vac; 20.8 A @ 120 Vac, 208 Vac, 240 Vac, 277 Vac	Tradeline
R4222D1021/U	DPDT	208V; 240 V	3 A @ 480 Vac; 6 A @ 208 Vac, 240 Vac, 277 Vac; 12 A @ 120 Vac	18 A @ 480 Vac; 35 A @ 208 Vac, 240 Vac, 277 Vac, 60 A @ 120 Vac	10 A @ 480 Vac; 20.8 A @ 120 Vac, 208 Vac, 240 Vac, 277 Vac	Tradeline
R4222N1002/U	DPDT - Pilot Duty	120 V	3 A @ 480 Vac; 6 A @ 208 Vac, 240 Vac, 277 Vac; 12 A @ 120 Vac	18 A @ 480 Vac; 35 A @ 208 Vac, 240 Vac, 277 Vac, 60 A @ 120 Vac	10 A @ 480 Vac; 20.8 A @ 120 Vac, 208 Vac, 240 Vac, 277 Vac	Tradeline
R8222B1067/U	SPDT	24 Vac	3 A @ 480 Vac; 6 A @ 208 Vac, 240 Vac, 277 Vac; 12 A @ 120 Vac	18 A @ 480 Vac; 35 A @ 208 Vac, 240 Vac, 277 Vac, 60 A @ 120 Vac	10 A @ 480 Vac; 20.8 A @ 120 Vac, 208 Vac, 240 Vac, 277 Vac	Tradeline
R8222D1014/U	DPDT	24 Vac	3 A @ 480 Vac; 6 A @ 208 Vac, 240 Vac, 277 Vac; 12 A @ 120 Vac	18 A @ 480 Vac; 35 A @ 208 Vac, 240 Vac, 277 Vac, 60 A @ 120 Vac	10 A @ 480 Vac; 20.8 A @ 120 Vac, 208 Vac, 240 Vac, 277 Vac	Tradeline
R8222N1011/U	DPDT - Pilot Duty	24 Vac	3 A @ 480 Vac; 6 A @ 208 Vac, 240 Vac, 277 Vac; 12 A @ 120 Vac	18 A @ 480 Vac; 35 A @ 208 Vac, 240 Vac, 277 Vac, 60 A @ 120 Vac	10 A @ 480 Vac; 20.8 A @ 120 Vac, 208 Vac, 240 Vac, 277 Vac	Tradeline
R8222U1079/U	DPST N.O. (1 P & 1 pilot duty)	24 V	3 A @ 480 Vac; 6 A @ 208 Vac, 240 Vac, 277 Vac; 12 A @ 120 Vac	60 A @ 120 Vac; 18 A @ 480 Vac; 35 A @ 208 Vac, 240 Vac, 277 Vac	15 A @ 120 Vac, 208 Vac, 240 Vac, 277 Vac; 10 A @ 480 Vac	Tradeline
R8222V1003/U	DPDT (1 P & 1 pilot duty)	24 Vac	3 A @ 480 Vac; 6 A @ 208 Vac, 240 Vac, 277 Vac; 12 A @ 120 Vac	18 A @ 480 Vac; 35 A @ 208 Vac, 240 Vac, 277 Vac, 60 A @ 120 Vac	10 A @ 480 Vac; 20.8 A @ 120 Vac, 208 Vac, 240 Vac, 277 Vac	Tradeline
R8228B1012/U	SPDT	24 Vac	5 A @ 480 Vac; 12 A @ 277 Vac; 18 A @ 208 Vac, 240 Vac; 16/18 A @ 120 Vac	30 A @ 480 Vac; 72 A @ 208 Vac, 240 Vac, 277 Vac; 96/72 A @ 120 Vac	12.5 A @ 480 Vac; 25 A @ 120 Vac; 208 Vac, 240 Vac, 277 Vac	Tradeline
R8228D1018/U	DPST N.O.	24 Vac	3.0 A @ 480 Vac; 5.5 A @120 Vac, 208 Vac, 240 Vac, 277 Vac	8 A @ 480 Vac; 15 A @ 120 Vac, 208 Vac, 240 Vac, 277 Vac	12.5 A @ 480 Vac; 25 A @ 120 Vac; 208 Vac, 240 Vac, 277 Vac	

R4225; R8225 Fan Relay

Provide general purpose and heavy duty switching for refrigeration and air conditioning equipment, appliances, vending machines and similar applications.

- Molded terminal numbers and circuit diagram on top of relay provide easy identification for wiring and checking system operation.
- Untaped coil assures cooler operation.
- Laminated magnet construction for higher efficiency.
- Base designed for easy replacement of competitive relays.
- Double quick-connect coil terminals.
- Plug compatible with Steveco 90-340 and Mars 90340.

Electrical Connections: Leadwires
Frequency: 60 Hz
Coil Ratings Voltage: 24 Vac
Temperature Ratings: 115°F (46°C)
Approximate, Dimensions: 2 11/16 in. high x 2 1/2 in. wide x 3 7/16 in. deep (68 mm high x 64 mm wide x 87 mm deep)
Approvals, CSA: Certified: File No. LR95329-1
Approvals, Underwriters Laboratories Inc.: UL Listed: File No. E14480, Vol. 1. Sec. 3, Guide No. NLDX

Accessories:
129384A/U – 129384A is a Case and Cover Assembly

Material Number	Switching	Contact Ratings (AFL)	Contact Ratings (AIR)	Contact Ratings (resistive)	Tradeline Value
R8225A1017/U	SPDT	N.O. 8.0A, N.C., 7.0A, Aux. 2.0A @ 240 Vac; N.O. 14.0A, N.C. 14.0A, Aux. 3.0A @ 120 Vac	N.O. 48.0 A, N.C. 42.0 A, Aux. 12.0 A @ 240 Vac; N.O. 84.0 A, N.C. 84.0 A, Aux. 18.0 A @ 120 Vac	N.O. 8.0 A, N.C. 7.0 A, Aux. 2.0 A @ 240 Vac; N.O. 16.0 A, N.C. 14.0 A, Aux. 3.0 A @ 120 Vac	Tradeline
R8225D1003/U	DPST N.O.	N.O. 8.0 A, Aux. 2.0 A @ 240 Vac; N.O. 14.0 A, Aux. 3.0 A @ 120 Vac	N.O. 48.0 A, Aux. 12.0 A @ 240 Vac; N.O. 84.0 A, Aux. 18.0 A @ 120 Vac	N.O. 8.0 A, Aux. 2.0 A @ 240 Vac; N.O. 16.0 A, Aux. 3.0 A @ 120 Vac	

R8229 Electric Heat Relay

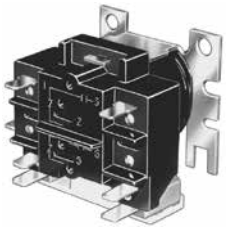

Normally Closed Relays And Contactors For Load Control Systems.

- Close and leave load operating in case of wiring or control problem, or relay malfunction.
- Consume no power while load is powered; require power only to shed load.
- Operate directly from a pilot duty rated relay in the load control system.

Electrical Connections: #10 combination head screws
Contact Ratings (AFL): 2.8 A @ 600Vac; 3.5 A @ 480Vac; 7.0 A @ 120 Vac, 208 Vac, 240 Vac, 277 Vac
Contact Ratings (ALR): 14 A @ 600 Vac; 17.5 A @ 480 Vac; 35 A @ 120 Vac, 208 Vac, 240 Vac, 277 Vac
Contact Ratings (resistive): 10.0 A @ 600 Vac; 12.5 A @480 Vac; 25 A @ 120 Vac, 208 Vac, 240 Vac, 277 Vac
Temperature Ratings: -40°F to +165°F (-40°C to +74°C)
Approximate, Dimensions: 2 3/16 in. high x 2 3/32 in. wide x 2 1/4 in. deep (56 mm high x 53 mm wide x 57 mm deep)
Approvals, CSA: Recognized
Approvals, Underwriters Laboratories Inc.: UL Component Recognized

Dimensions in inches (millimeters)

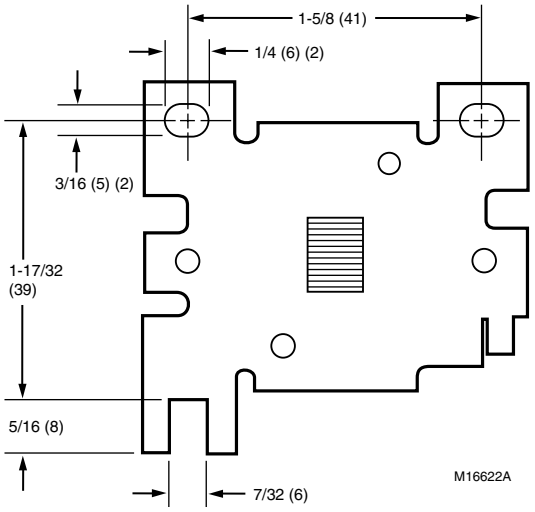

Material Number	Coil Ratings Voltage	Frequency	Switching	Includes	Tradeline Value
R8229A1005/U	24 Vac	60 Hz	DPST		
R8229A1021/U	24 Vac	60 Hz	DPST	Extra Mounting Hardware	Super Tradeline

R8330 Electric Furnace Sequencer

One control switches a fan and up to three elements on and off in sequence.

- Isolated fan switch has positive interlock to assure fan is on when the element is on, and fan is off when the element is off.
- Replaces many of the OEM and competitive models.
- Auxiliary switch controls a second R8330 in application with more than three elements.
- Cycles ON within two minutes, OFF within four minutes.
- Ten-second minimum delay between stages (makes sequence and break sequence.)
- Timings meet EEI-NEMA and ARI 280 Standards.

Electrical Connections: Terminals
Frequency: 60 Hz
Contact Ratings (AFL): 1/3 hp; 7.2 A @ 120 Vac; 3/4 hp; 6.9 A @ 120 Vac, 208 Vac, 240 Vac; 4.9 A @ 277 Vac
Contact Ratings (ALR): 1/3 hp; 43.2 A @ 120 Vac; 3/4 hp; 41.4 A @ 120 Vac, 208 Vac, 240 Vac; 29.4 A @ 277 Vac
Temperature Ratings: -20°F to +150°F (-29°C to +66°C)
Approximate, Dimensions: 3 1/16 in. high x 4 13/16 in. wide x 2 11/32 in. deep (78 mm high x 122 mm wide x 60 mm deep)
Approvals, CSA: Certified
Approvals, Underwriters Laboratories Inc.: UL Listed

Material Number	Coil Ratings Voltage
R8330D1039/U	24 Vac

R841 Electric Heating Relay

Use with two-wire, 24 Vac thermostat to control electric heating equipment such as baseboard, ceiling cable and duct heaters.

- Operate with each cycle of the thermostat (4 to 6 cycles per hour).
- Each relay switches up to a 5,000 W load.
- Contacts make and break in about 75 seconds.
- Mount in any position.
- Includes 1/2 in. (13 mm) male conduit bushing.

Frequency: 50 Hz; 60 Hz
Switching: SPST
Contact Ratings (AFL): 7.0 A @ 208 Vac, 240 Vac, 277 Vac; 14 A @ 120 Vac
Contact Ratings (resistive): 22 A @ 120 Vac, 208 Vac, 240 Vac; 19 A @ 277 Vac

Temperature Ratings: -20°F to +150°F (-29°C to +66°C)
Approximate, Dimensions: 3 7/8 in. high x 2 13/16 in. wide x 1 1/2 in. deep (98 mm high x 71 mm wide x 38 mm deep)
Approvals, CSA: Certified

Material Number	Coil Ratings Voltage	Electrical Connections	Contact Ratings (ALR)	Approvals, Underwriters Laboratories Inc.	Includes	Tradeline Value
R841C1029/U	240 V	Leadwires	42 A @ 208 Vac, 240 Vac, 277 Vac; 84 A @ 120 Vac	UL Listed	Enclosure w/conduit bushing.	
R841C1151/U	600 Vac		84 A @ 120 Vac; 42 A @ 208 Vac, 240 Vac, 277 Vac	UL Component Recognized: File No. E47434, Guide No. XAPX	Enclosure w/ conduit bushing and an integral transformer.	
R841C1169/U	208 V; 240 Vac	Leadwires	84 A @ 120 Vac; 42 A @ 208 Vac, 240 Vac, 277 Vac	UL Component Recognized: File No. E47434, Guide No. XAPX	Enclosure w/ conduit bushing and an integral transformer.	Tradeline
R841C1227/U	24 V	Leadwires	42 A @ 208 Vac, 240 Vac, 277 Vac; 84 A @ 120 Vac	UL Listed		Tradeline
R841D1036/U	24 V	Leadwires	84 A @ 120 Vac; 42 A @ 208 Vac, 240 Vac, 277 Vac	UL Component Recognized: File No. E47434, Guide No. XAPX	Enclosure w/conduit bushing.	Tradeline
R841E1068/U	24 V	Leadwires	42 A @ 208 Vac, 240 Vac, 277 Vac; 84 A @ 120 Vac	UL Listed	Enclosure w/conduit bushing and integral transformer; dual load.	Tradeline

ST82 Fan Manager

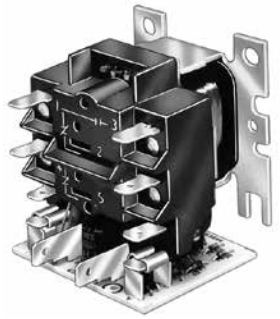

Use in compressor-run air conditioning, heat pump systems and heating-cooling systems. Delays the indoor blower shutoff after the compressor has shut off.

- Eighty-second delay on break.
- Combination electronic time delay board and R8222 relay saves wiring time.
- Molded terminal numbers and circuit diagram on top of relay and letter-coded terminals on time delay board provide easy identification for wiring and system checkout.
- Laminated magnet construction for high efficiency.
- Reduces stratification and saves energy.

Electrical Connections: 1/4 in. quick-connect terminals
Frequency: 50 Hz; 60 Hz
Contact Ratings (AFL): 3 A @ 480 Vac; 6 A @ 208 Vac, 240 Vac, 277 Vac; 12 A @ 120 Vac
Contact Ratings (ALR): 18 A @ 480 Vac; 35 A @ 208 Vac, 240 Vac, 277 Vac, 60 A @ 120 Vac
Contact Ratings (resistive): 15 A @ 208 Vac, 240 Vac, 277 Vac; 15 A @ 120 Vac; 10 A @ 480 Vac
Timing Delay: 80 seconds
Temperature Ratings: -20°F to +150°F (-29°C to +66°C)
Approximate, Dimensions: 2 7/32 in. high x 2 1/16 in. wide x 2 9/16 in. deep (56 mm high x 52 mm wide x 65 mm deep)
Approvals, CSA: Certified: File No. LR95329-17
Approvals, Underwriters Laboratories Inc.: UL Listed: File No. MP466, Vol. 22, Sec. 1, Guide No. MBPR2
Tradeline Value: Tradeline

Material Number	Coil Ratings Voltage	Switching
ST82D1004/U	24 Vac	DPDT

Relay Accessories

Material Number	Description	
129384A/U	129384A is a Case and Cover Assembly	

Relay Parts

Material Number	Description	
135887/U	135887 is a Bail Lock Down Assembly	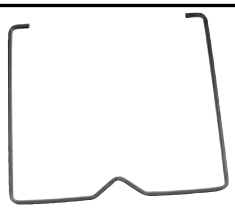
135959/U	135959 is a Relay Receptacle, sold in bulk packs	

Relays Selection Guide

Relays							
Input Voltage/ Coil Voltage	**Switching**	**Product Number**	**Full Load Amp Rating**	**Frequency**	**Dimensions (in.) H x W x D**	**Electrical Connections (main)**	**Special Features**
24 V	DPST N.O.	R8228D1018/U	5.5	60Hz/50Hz	1 7/8 x 2 5/32 x 2 3/8	Q	—
	DPDT (1 P&1PDuty)	R8222V1003/U	12	60Hz/50Hz	1 7/8 x 2 5/32 x 2 3/8	Q	—
	DPDT - Pilot Duty	R8222N1011/U		60Hz/50Hz	1 7/8 x 2 5/32 x 2 3/8	Q	Pilot Duty
	DPDT	R8222D1014/U		60Hz/50Hz	1 7/8 x 2 5/32 x 2 3/8	Q	—
	DPDT	ST82D1004/U		60Hz/50Hz	2 7/32 x 2 1/16 x 2 9/16	Q	80 sec shut off delay
	SPDT	R8222B1067/U		60Hz/50Hz	1 7/8 x 2 5/32 x 2 3/8	Q	—
120 V	DPDT - Pilot Duty	R4222N1002/U		60Hz/50Hz	1 7/8 x 2 5/32 x 2 3/8	Q	—
	DPDT	R4222D1013/U		60Hz/50Hz	1 7/8 x 2 5/32 x 2 3/8	Q	—
	SPDT	R4222B1082/U		60Hz/50Hz	1 7/8 x 2 5/32 x 2 3/8	Q	—
208V/240V	DPDT	R4222D1021/U		60Hz/50Hz	1 7/8 x 2 5/32 x 2 3/8	Q	—
24V	SPDT	R8225A1017/U	14	60Hz	2 11/16 x 2 1/2 x 3 7/16	L	—
	DPST N.O.	R8225D1003/U		60Hz	2 11/16 x 2 1/2 x 3 7/16	L	—
24 V	SPDT	R8228B1012/U	18	60Hz/50Hz	1 7/8 x 2 5/32 x 2 3/8	Q	—

Connectors Key
CHS - Combination Head Screw
Q - Quick Connect
L - Leadwires
T - Terminals

Switching Key
SPST - Single Pole Single Throw
DPST - Double Pole Single Throw
DPDT - Double Pole Double Throw
SPDT - Single Pole Double Throw

Approvals: UL, CSA
Temp Rating: -20°F to +150°F; 115°F max for R8225

Electric Heat Sequencer Selection Guide

Electric Heat Selection Guide

Electric Heat Relays							
Input Voltage/ Coil Voltage	**Switching**	**Product Number**	**Full Load Amp Rating**	**Frequency**	**Dimensions (in.) H x W x D**	**Electrical Connections (main)**	**Special Features**
24V	DPST	R8229A1005/U	7	60Hz	2 3/16 x 2 3/32 x 2 1/4	CHS	—
		R8229A1021/U		60Hz	2 3/16 x 2 3/32 x 2 1/4	CHS	Extra Mounting Hardware
24V	SPST	R841D1036/U	14	60Hz/50Hz	3 7/8 x 2 13/16 x 1 1/2	L	18A resistive @ 120/208/240VAC. Requires Transformer. Canada - replaces R841D1028
208/240V	SPST	R841C1169/U		60Hz/50Hz	3 7/8 x 2 13/16 x 1 1/2	L	18A resistive @ 120/208/240VAC. Integral Transformer. Canada - replaces R841C1029
240V	SPST	R841E1068/U		60Hz/50Hz	3 7/8 x 2 13/16 x 1 1/2	L	22A resistive @120/208/240VAC. Dual Load/ integral transformer
600V	SPST	R841C1151/U		60Hz/50Hz	3 7/8 x 2 13/16 x 1 1/2	L	18A resistive @120/208/240VAC. Integral Transformer. Canada

Electric Furnace Sequencer					
Input Voltage/Coil Voltage	**Product Number**	**Full Load Amp Rating**	**Frequency**	**Dimensions (in.) H x W x D**	**Electrical Connections (main)**
24V	R8330D1039/U	7.2	60Hz	3 1/16 x 4 13/16 x 2 11/32	T

Electric Heat Contactor					
Input Voltage/Coil Voltage	**Switching**	**Product Number**	**Full Load Amp Rating**	**Dimensions (in.) H x W x D**	**Electrical Connections (main)**
24V	DPST	R8246A1038/U	30	2-3/16 x 2-1/4 x 3-5/16	Q,S

Connectors Key
CHS - Combination Head Screw
Q - Quick Connect
L - Leadwires
T - Terminals
S - # 6 Screw

Switching Key
SPST - Single Pole Single Throw
DPST - Double Pole Single Throw
DPDT - Double Pole Double Throw
SPDT - Single Pole Double Throw

Approvals: UL, CSA
Temp Rating: -20°F to +150°F; 115°F max for R8225

Electric Heat Sequencer Selection Guide

Electric Heat Sequencers												
Product Number	Switches	Timings	Timings - ON					Timings - OFF				
			M1-M2	M3-M4	M5-M6	M7-M8	M9-M10	M1-M2	M3-M4	M5-M6	M7-M8	M9-M10
R24AA1008/U	1	1	1-20	—	—	—	—	40-110	—	—	—	—
R24AA3004/U	1	1	—	—	30-90	—	—	—	—	1-30	—	—
R24BA1006/U•	2	1	1-20	1-20	—	—	—	40-110	40-110	—	—	—
R24BA3002/U•	2	1	—	—	30-90	30-90	—	—	—	1-30	1-30	—
R24CB4007/U•	3	2	1-110	1-110	1-110	—	—	1-110	1-110	1-110	—	—
R24DB4005/U•	4	2	1-110	1-110	1-110	1-110	—	1-110	1-110	1-110	1-110	—
R24ED5007/U•	5	4	1-160	1-160	1-160	1-160	1-160	1-160	1-160	1-160	1-160	1-160

Heat Pump-Air Handler Model					
WR Xref	Product Number	Switches	Timings	Heat	Cool
24A34-15	R24AA2006	1	1	1-25	75-95

Notes:
*M1-M2 and M3-M4 are always first switches to turn ON and last to turn OFF. All other switches are random ON and random OFF.
*R24ED5007 Switch contacts designated F1 - F2 instead of M1 - M2.
*R24BB3428 is Double Pole Double Throw model.
*R24AA2006 is a Single Pole Double Throw model for Heat Pump Applications.
• These contacts switch simultaneously.

Switching Key
SPST - Single Pole Single Throw
DPST - Double Pole Single Throw
DPDT - Double Pole Double Throw
SPDT - Single Pole Double Throw

Temperature: -50°F to 165°F
Terminations: [Solder or screw type 1/4" quick connect]
Ratings: Estimate - 25A Resistive and 14A Inductive at 120Vac
Agency: UL/CSA

ON Time: Elapsed time (min. to max.) to make contact after heater is energized.
OFF Time: Elapsed time (min. to max.) to break contact after heater is de-energized.

Electric Heat Sequencer Cross Reference

Honeywell	White-Rodgers	SUPCO	GEMLINE	A1	T-O-D	Mars
R24AA1008/U	24A34-1	Q101	GS101	TDR10	12S20	33841
R24AA3004/U	24A34-2	Q102	GS102	TDR15	12S20	33842
R24BA1006/U	24A34-3	Q103	GS103	TDR20	12S22	33844
R24BA3002/U	24A34-4	Q104	GS104	TDR25	12S22	33845
R24CB4007/U	24A34-5	Q105	GS105	TDR30	15S21	33832
R24DB4005/U	24A34-6	Q106	GS106		15S22	33833
R24ED5007/U	24A34-14				15S241	33848
R24AA2006/U	24A34-15					

R8239 Control Center

Includes NEMA standard transformer for excellent voltage control. Provides low voltage control of line voltage fan motors and auxiliary circuits in heating, cooling, and heating-cooling circuits.

- NEMA standard Type D transformer (included) powers 24 Vac control systems.
- Provides overload protection for transformer.
- Convenient connections for thermostat and heating and cooling equipment wiring.
- Mounts on standard 4 x 4 junction box.
- Can be mounted in any indoor location without additional enclosure.
- Relay is easily replaced without disturbing wiring.
- Includes relay enclosure.

Dimensions: 4 1/2 in. high, 4 3/16 in. wide, 3 3/32 in. deep (114 mm high, 106 mm wide, 79 mm deep)
Frequency: 50 Hz; 60 Hz
Electrical Ratings: 12 W maximum
Coil Ratings: Inrush – 20 VA maximum, 17 VA nominal.; Sealed – 10 VA maximum, 9 VA nominal

Approvals, NEMA Standard: NEMA Standard DC20-1992
Approvals, Underwriters Laboratories Inc.: UL Listed
Approvals, CSA: Certified

Material Number	Applications	Horsepower	Voltage	Supply Voltage	Tradeline Value	Switching Action	Includes
R8239A1052/U	For 24 Vac fan control applications	3/4 HP	120 Vac	40 VA; 26.5 V - Secondary		SPDT	R8222B
R8239B1076/U	For system with F50 Electronic Air Cleaner humidifier and blower motor.	3/4 HP	120 Vac; 208 Vac; 240 Vac	50 VA; 26.5 V - Secondary	Super Tradeline	DPDT	R8222D

R8285 Control Center

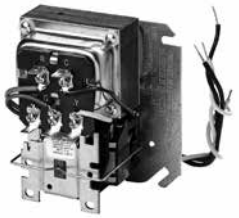

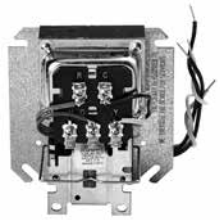

Provides low voltage control of line voltage fan motors and auxiliary circuits in heating, cooling, or air conditioning systems.

- Transformer powers low voltage control systems and provides overload protection.
- Low voltage terminal board provides convenient connections for thermostat and heating and cooling equipment wiring.
- Mounts on standard 4 x 4 in. junction box.
- Relay is easily replaced without disturbing wiring.

Dimensions: 4 3/16 in. high, 4 1/2 in. wide, 2 13/16 in. deep. (106 mm high, 114 mm wide, 71 mm deep)
Frequency: 60 Hz
Electrical Ratings: 11 W maximum

Approvals, Underwriters Laboratories Inc.: UL Component Recognized; File No. E4436, Vol.15, Sec. 1, Guide No. XAPX2
Approvals, CSA: Certified: File No. LR95329-17

Material Number	Applications	Horsepower	Voltage	Supply Voltage	Tradeline Value	Switching Action	Comments	Includes
R8285A1048/U	For single- or two speed fan.	3/4 HP	120 Vac	40 VA; 26.5 V - Secondary	Tradeline	SPDT		R8222B
R8285B1053/U	For “Total Comfort” applications with electronic air cleaner, humidifier and blower motor.	3/4 HP	120 Vac; 208 Vac; 240 Vac	40 VA; 26.5 V - Secondary	Tradeline	DPDT		R8222D
R8285D5001/U	For 24 Vac fan control applications	3/4 HP	120 Vac	50 VA; 26.5 V - Secondary		DPST (One Power Rated, One Pilot Duty)	For Hydronic Applications; use with SV9600 SmartValve™ System and other systems that require 50 VA capacity	R8222U

Fan Center Selection Guide

Fan Centers									
Electrical Ratings - VA	**Electrical Ratings - Input Voltage**	**Switching**	**Product Number**	**NEMA**	**Dimensions (in.) H x W x D**	**Main Connections**	**Secondary Connections**	**Frequency**	**Special Features**
40VA	120 Vac	SPDT	R8239A1052/U	Yes	4 1/2 x 4 3/16 x 3 3/32	Leadwires	Leadwires	60Hz/50Hz	Tradeline
50VA	120 Vac| 240 Vac| 208 Vac	DPDT	R8239B1076/U	Yes	4 1/2 x 4 3/16 x 3 3/32	Leadwires	Leadwires	60Hz/50Hz	Super Tradeline
40VA	120 Vac	SPDT	R8285A1048/U	No	4 3/16 x 4 1/2 x 2 13/16	Leadwires	Leadwires	60Hz/50Hz	Tradeline
	120 Vac| 240 Vac| 208 Vac	DPDT	R8285B1053/U	No	4 3/16 x 4 1/2 x 2 13/16	Leadwires	Leadwires	60Hz/50Hz	Tradeline
50VA	120 Vac	DPDT	R8285D5001/U	No	4 3/16 x 4 1/2 x 2 13/16	Leadwires	Leadwires	60Hz/50Hz	—

Approvals: UL, CSA
Temp Rating: -20°F to +105°F
Mounting: Standard 4 X 4 in. junction box
SuperTradeline models include extra hardware.

AT120; AT140; AT150A,B; AT175A,B General Purpose Transformer

AT120A AT140A AT120B, AT140B, AT140D, AT150B AT150A AT175A

Honeywell 20 VA general purpose transformers power 24 Vac circuits. Although typically used in heating/cooling control systems, they can be used in any application that doesn't exceed the load ratings.

- Provides color-coded leadwires for primary connections and screw terminals for secondary connections
- Includes fixed 1/4 inch (6mm) male quick-connects or color-coded leadwires for primary and secondary connections
- Meets NEC Class 2 requirements and Underwriters Laboratories Standard UL 1585
- Identified Class 2 not wet, Class 3 wet

Frequency: 60 Hz
Approvals, Underwriters Laboratories Inc.: UL Listed: A,C,F models. File # E14881, UL Component Recognized: B, D, E models. File# E14881
Approvals, CSA: CSA Certified: A & B models.
Approvals, N.E.C.: NEC Class 2
Temperature Range: -20°F to +105°F (-29°C to +41°C)

Material Number	Electrical Connections (Primary)	Electrical Connections (Secondary)	Electrical Ratings-Primary voltage	Electrical Ratings-Secondary voltage	Electrical Ratings, Output	Mounting	Approximate, Dimensions	Includes
AT120A1004/U	9 in. leadwires (229 mm leadwires)	(2) screw terminals	120 Vac, 208 Vac, 240 Vac	27 V.O.C.	24 Vac at 20 VA	Foot mounted, plate mounted on 2 x 4 in. or 4 x 4 in. outlet box, clamp mounted using outlet box knockout, or panel mounted	2 7/8 in. high x 1 7/8 in. wide x 2 15/16 in. deep (73 mm high x 48 mm wide x 75 mm deep)	
AT120B1028/U	9 in. leadwires (229 mm leadwires)	9 in. leadwires (229 mm leadwires)	120 Vac	27 V.O.C.	24 Vac at 20 VA	Foot-mounted	1 11/16 in. high x 3 3/16 in. wide x 1 3/4 in. deep (43 mm high x 81 mm wide x 75 mm deep)	Metal end bells
AT140A1000/U	9 in. leadwires (229 mm leadwires)	(2) screw terminals	120 Vac	27 V.O.C.	24 Vac at 40 VA	Foot mounted, plate mounted on 2 x 4 in. or 4 x 4 in. outlet box, clamp mounted using outlet box knockout, or panel mounted	3 3/16 in. high x 2 3/8 in. wide x 3 1/8 in. deep (81 mm high x 60 mm wide x 79 mm deep)	Metal end bells
AT140A1018/U	9 in. leadwires (229 mm leadwires)	(2) screw terminals	120 Vac	27 V.O.C.	24 Vac at 40 VA	Foot mounted, plate mounted on 2 x 4 in. or 4 x 4 in. outlet box, clamp mounted using outlet box knockout, or panel mounted	3 3/16 in. high x 2 3/8 in. wide x 3 1/8 in. deep (81 mm high x 60 mm wide x 79 mm deep)	Metal end bells
AT140B1016/U	1/4 in. male quick-connects (6.4 mm male quick connects)	1/4 in. male quick-connects (6.4 mm male quick-connects)	120 Vac	27 V.O.C.	24 Vac at 40 VA	Foot-mounted	1 11/16 in. high x 3 1/2 in. wide x 1 3/4 in. deep (43 mm high x 89 mm wide x 75 mm deep)	Plastic end caps
AT140B1206/U	9 in. leadwires (229 mm leadwires)	9 in. leadwires (229 mm leadwires)	120 Vac	27 V.O.C.	24 Vac at 40 VA	Foot-mounted	1 11/16 in. high x 3 1/2 in. wide x 1 3/4 in. deep (43 mm high x 89 mm wide x 75 mm deep)	Plastic end caps
AT140B1214/U	9 in. leadwires (229 mm leadwires)	9 in. leadwires (229 mm leadwires)	120 Vac, 208 Vac, 240 Vac	27 V.O.C.	24 Vac at 40 VA	Foot-mounted	1 11/16 in. high x 3 1/2 in. wide x 1 3/4 in. deep (43 mm high x 89 mm wide x 75 mm deep)	Plastic end caps
AT150A1007/U	9 in. leadwires (229 mm leadwires)	(2) screw terminals	120 Vac, 208 Vac, 240 Vac	27.5 V.O.C.	24 Vac at 50 VA	Foot mounted, plate mounted on 2 x 4 in. or 4 x 4 in. outlet box, clamp mounted using outlet box knockout, or panel mounted	1 11/16 in. high x 3 3/16 in. wide x 1 3/4 in. deep (43 mm high x 81 mm wide x 75 mm deep)	Metal end bells

Material Number	Electrical Connections (Primary)	Electrical Connections (Secondary)	Electrical Ratings-Primary voltage	Electrical Ratings-Secondary voltage	Electrical Ratings, Output	Mounting	Approximate, Dimensions	Includes
AT150B1146/U	9 in. leadwires (229 mm leadwires)	9 in. leadwires (229 mm leadwires)	120 Vac, 208 Vac, 240 Vac		24 Vac at 50 VA	Foot-mounted	1 11/16 in. high x 3 1/2 in. wide x 1 3/4 in. deep (43 mm high x 89 mm wide x 75 mm deep)	
AT150B1252/U	9 in. leadwires with 1/4 in. male quick-connects (229 mm leadwires with 1/4 in. male quick-connects with plastic (2) end covers)	9 in. leadwires with 1/4 in. male quick-connects with plastic (2) end covers (229 mm leadwires with 6.4 mm male quick-connects with plastic (2) end covers)	277 Vac	27.5 V.O.C.	24 Vac at 50 VA	Foot-mounted	1 11/16 in. high x 3 1/2 in. wide x 1 3/4 in. deep (43 mm high x 89 mm wide x 75 mm deep)	Plastic end caps
AT175A1008/U	9 in. leadwires (229 mm leadwires)	(2) screw terminals	120 Vac, 208 Vac, 240 Vac	27.5 V.O.C.	24 Vac at 75 VA	Foot mounted, plate mounted on 2 x 4 in. or 4 x 4 in. outlet box, clamp mounted using outlet box knockout, or panel mounted	3 3/16 in. high x 2 3/8 in. wide x 3 5/8 in. deep (81 mm high x 60 mm wide x 92 mm deep)	Metal end bells
AT175B1055/U	9 in. leadwires (229 mm leadwires)	9 in. leadwires (229 mm leadwires)	120 Vac		24 Vac at 75 VA	Foot-mounted	2 1/3 in. high x 3 9/16 in. wide x 2 1/3 in. deep (59 mm high x 90 mm wide x 68 mm deep)	

Dimensions in inches (millimeters)

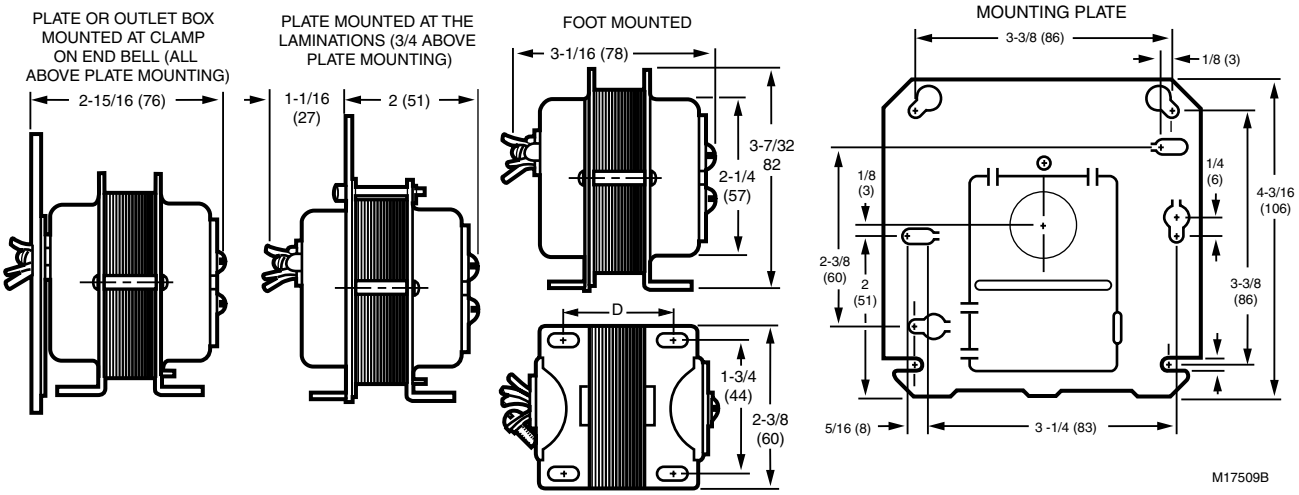

AT140 Universal Mount Transformer

The AT140 is a 24V, 40 VA universal mount transformer.

- Provides a low voltage power source for any Honeywell zone control panel or damper
- Powers up to 5 ZD or ARD damper motors and 14 RRD damper motors from one 40VA transformer
- Mounting options include plate or foot mounting
- 120/240 VAC primary

Electrical Connections (Primary): 9 in. leadwires (229 mm leadwires)
Electrical Connections (Secondary): (2) screw terminals
Frequency: 60 Hz

Approvals, Underwriters Laboratories Inc.: UL Listed
Approvals, CSA: CSA Listed
Temperature Range: -20°F to +105°F (-29°C to +41°C)

Material Number	Electrical Ratings-Primary voltage	Electrical Ratings-Secondary voltage	Electrical Ratings, Output	Mounting
AT140A1042/U	208 Vac, 240 Vac	24V	24 Vac at 40 VA	Universal (Plate, Foot or Knockout)

AT150F Circuit Breaker Transformer

Honeywell 50 VA general purpose transformers power 24 Vac circuits. Although typically used in heating/cooling control systems, they can be used in any application that doesn't exceed the load ratings.

- Color-coded lead wires for primary connections and screw terminals for secondary connections
- Includes fixed 1/4 inch (6mm) male quick-connects (AT150A models only) or color-coded lead wires for primary and secondary connections
- Meets Underwriters Laboratories Standard UL 1585
- Identified Class 2 not wet, Class 3 wet

Electrical Connections (Primary): 9 in. leadwires (229 mm leadwires)
Electrical Connections (Secondary): 9 in. leadwires (229 mm leadwires)
Frequency: 60 Hz
Approximate, Dimensions: 3 3/16 in. high x 2 3/16 in. wide x 3 5/8 in. deep (81 mm high x 56 mm wide x 93 mm deep)

Approvals, Underwriters Laboratories Inc.: UL Listed: File no. E14881, Guide no. XOKV.
Approvals, CSA: Certified: File No. LR95329-18
Tradeline Value: Tradeline
Temperature Range: -20°F to +105°F (-29°C to +41°C)

Dimensions in inches (millimeters)

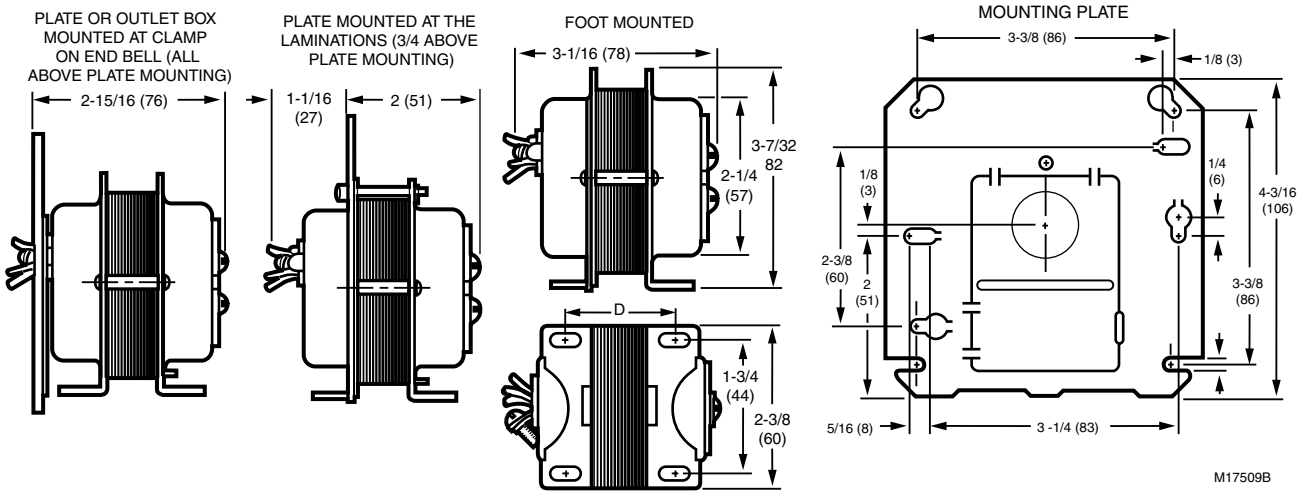

Material Number	Electrical Ratings-Primary voltage	Electrical Ratings-Secondary voltage	Electrical Ratings, Output	Mounting	Includes
AT150F1022/U	120 Vac, 208 Vac, 240 Vac	27.5 V.O.C.	24 Vac at 50 VA	Includes 1/2 14 NPSM conduit connector and lock nut for mounting on plate or panel (not included) with 7/8 in. knockout, and feet for surface mount.	Metal end bells and button for manually resetting the breaker
AT150F1030/U	208 Vac, 277 Vac, 480 Vac	27.5 V.O.C.	24 Vac at 50 VA	Includes 1/2 14 NPSM conduit connector and lock nut for mounting on plate or panel (not included) with 7/8 in. knockout, and feet for surface mount.	Button for manually resetting the circuit breaker and metal end bells.

AT175F Circuit Breaker Transformer

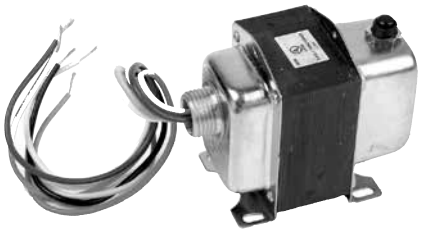

Honeywell 75 VA general purpose transformers power 24 Vac circuits. Although typically used in heating/cooling control systems, they can be used in any application that doesn't exceed the load ratings.

- Color-coded lead wires for primary connections and screw terminals for secondary connections
- Includes fixed 1/4 inch (6mm) male quick-connects (AT175A models only) or color-coded lead wires for primary and secondary connections
- Meets Underwriters Laboratories Standard UL 1585
- Identified Class 2 not wet, Class 3 wet

Electrical Connections (Primary): 9 in leadwires (229 mm leadwires)
Electrical Connections (Secondary): 9 in. leadwires (229 mm leadwires)
Frequency: 60 Hz
Approximate, Dimensions: 3 3/16 in. high x 2 3/16 in. wide x 3 15/16 in. deep (81 mm high x 56 mm wide x 102 mm deep)

Approvals, Underwriters Laboratories Inc.: UL Listed: File no. E14881, Guide no. XOKV.
Approvals, CSA: Certified: File No. LR95329-18
Includes: Button for manually resetting the circuit breaker and metal end bells.
Tradeline Value: Tradeline
Temperature Range: -20°F to +105°F (-29°C to +41°C)

Dimensions in inches (millimeters)

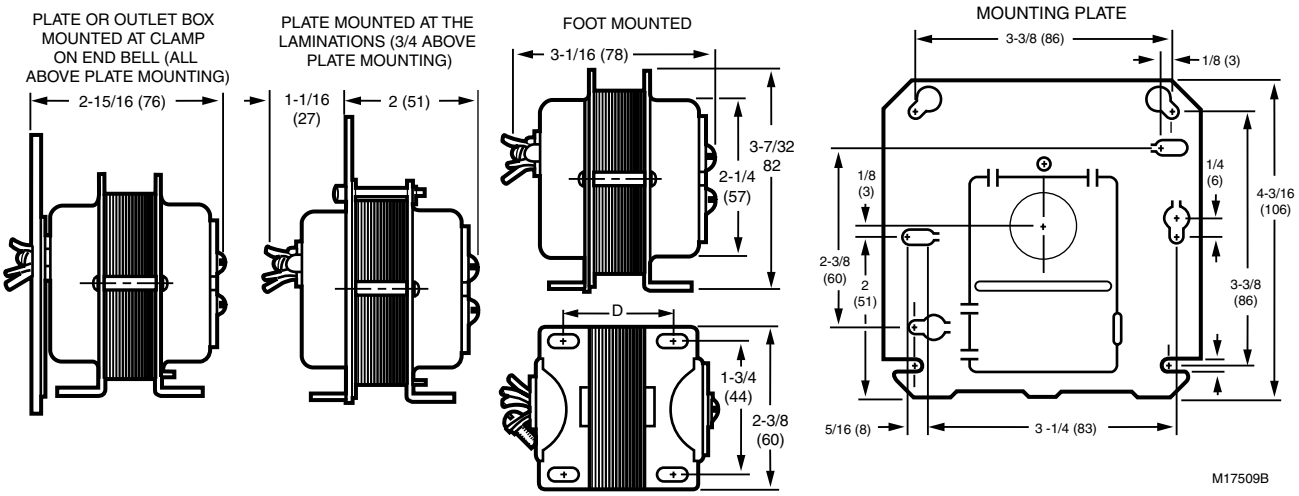

Material Number	Electrical Ratings-Primary voltage	Electrical Ratings-Secondary voltage	Electrical Ratings, Output	Mounting
AT175F1023/U	120 Vac, 208 Vac, 240 Vac	27.5 V.O.C.	24 Vac at 75 VA	Includes 1/2 14 NPSM conduit connector and lock nut for mounting on plate or panel (not included) with 7/8 in. knockout, and feet for surface mount.
AT175F1031/U	208 Vac, 277 Vac, 480 Vac	27.5 V.O.C.	24 Vac at 75 VA	Includes 1/2 14 NPSM conduit connector and lock nut for mounting on plate or panel (not included) with 7/8 in. knockout, and feet for surface mount.

AT20; AT40 NEMA Standard Universal Stripped-Down Transformer

Honeywell 19 VA transformers power 24V systems including thermostats, gas valves and relays.

- Channel frame mounting feet and slots allow for three mounting positions
- Features color-coded leadwires for primary connections
- Overload protection provided
- Energy limiting, meet NEMA DC20-1992 Standard
- Meet NEC Class 2 not wet, Class 3 wet and UL 1585 requirements

Electrical Connections (Primary): 9 in. color coded primary and secondary leadwires (229 mm color coded primary and secondary leadwires)
Electrical Connections (Secondary): 9 in. color coded primary and secondary leadwires (229 mm color coded primary and secondary leadwires.)
Frequency: 50 Hz; 60 Hz
Mounting: Channel Frame Mounting allows for Direct, Horizontal, or Vertical Foot mounting.

Approvals, Underwriters Laboratories Inc.: UL Component Recognized
Approvals, CSA: Certified
Tradeline Value: Tradeline
Temperature Range: -20°F to +105°F (-29°C to +41°C)

Dimensions in inches (millimeters)

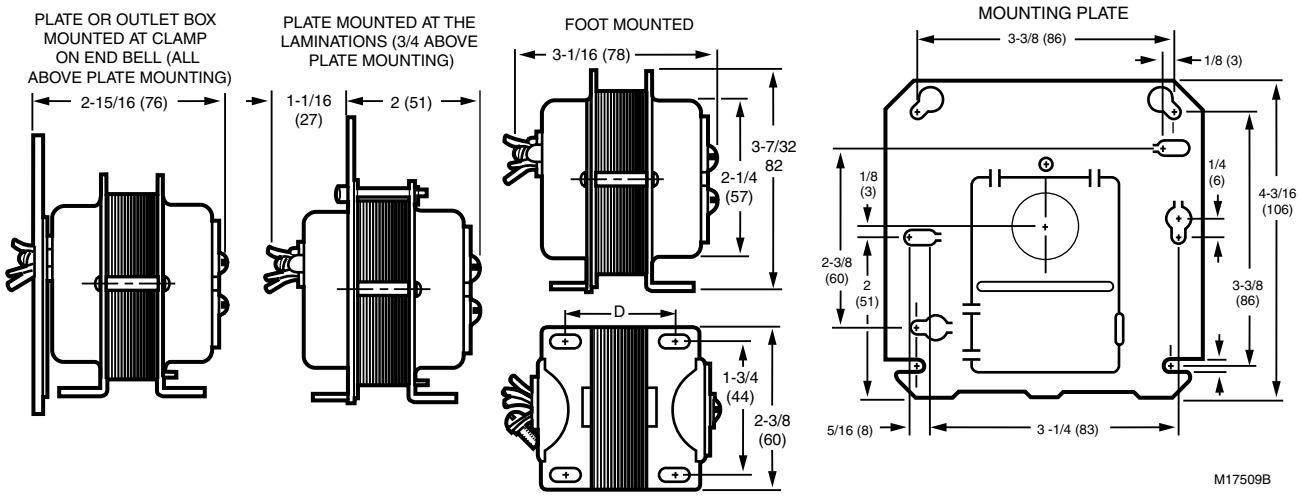

Material Number	Electrical Ratings-Primary voltage	Electrical Ratings-Secondary voltage	Electrical Ratings, Output	NEMA Rating	Approximate, Dimensions
AT20A1123/U	120 Vac	26.5 V.O.C.	24 Vac at 19 VA	NEMA type B	2 in. high x 2 1/4 in. wide x 1 7/8 in. deep (50.8 mm high x 57 mm wide x 47.6 mm deep)
AT40A1121/U	120 Vac	26.5 V.O.C.	24 Vac at 40 VA	NEMA type D	2 3/32 in. high x 2 5/8 in. wide x 2 3/16 in. deep (53 mm high x 67 mm wide x 56 mm deep)
AT40A1139/U	240 Vac	26.5 V.O.C.	24 Vac at 40 VA	NEMA type D	2 3/32 in. high x 2 5/8 in. wide x 2 3/16 in. deep (53 mm high x 67 mm wide x 56 mm deep)

AT72 NEMA Standard Transformer

Honeywell 40 VA transformers power 24V systems including thermostats, gas valves and relays.

- Override protection
- Color-coded lead wires for primary connections
- Energy limiting and meets NEMA Standard DC20-1992
- Transformers are marked NEMA Type D enclosure
- Meets NEC Class 2 not wet, Class 3 wet and UL 1585 requirements

Electrical Ratings, Output: 24 Vac at 40 VA
Frequency: 50 Hz; 60 Hz
NEMA Rating: NEMA type D
Approvals, Underwriters Laboratories Inc.: UL Component Recognized

Approvals, CSA: Certified
Approvals, N.E.C.: NEC Class 2
Temperature Range: -20°F to +105°F (-29°C to +41°C)

Material Number	Electrical Connections (Primary)	Electrical Connections (Secondary)	Electrical Ratings-Primary voltage	Electrical Ratings-Secondary voltage	Mounting	Approximate, Dimensions	Tradeline Value
AT72D1006/U	9 in. leadwires (229 mm leadwires)	(2) screw terminals	120 Vac	26.5 V.O.C.	4 x 4 in. plate-mounted, protruding into junction box	3 7/32 in. high x 2 7/32 in. wide x (1 1/16 into plate x 2 in. above plate) deep (81.8 mm high x 56.4 mm wide x (27 mm into box x 50.8 mm above box) deep)	
AT72D1030/U	9 in. leadwires (229 mm leadwires)	(2) screw terminals	220 Vac 50 Hz with 40 VA		4 x 4 in. plate-mounted, protruding into junction box	3 7/32 in. high x 2 7/32 in. wide x (1 1/16 into plate x 2 in. above plate) deep (81.8 mm high x 56.4 mm wide x (27 mm into box x 50.8 mm above box) deep)	
AT72D1089/U	1/2 in. male conduit spud with 9 in. leadwires (13 mm male conduit spud with 9 in. leadwires)	(2) screw terminals	120 Vac	26.5 V.O.C.	Foot-mounted	3 7/32 in. high x 2 7/32 in. wide x 3 1/16 in. deep (81.8 mm high x 56.4 mm wide x 77.8 mm deep)	
AT72D1188/U	9 in. leadwires (229 mm leadwires)	9 in. leadwires (229 mm leadwires)	120 Vac	26.5 V.O.C.	4 x 4 in. plate-mounted, protruding into junction box	3 7/32 in. high x 2 7/32 in. wide x 2 15/16 in. deep (81.8 mm high x 56.4 mm wide x 74.6 mm deep)	
AT72D1683/U	9 in. leadwires (229 mm leadwires)	(2) screw terminals	120 Vac	26.5 V.O.C.	Can be foot mounted, plate mounted on 4 x 4 in., 4 in. octagon, or 2 x 4 in. electrical boxes (transformer all above plate or 3/4 above plate); or clamp mounted via a junction box knockout.	3 7/32 in. high x 2 7/32 in. wide x 3 1/16 in. deep (81.8 mm high x 56.4 mm wide x 77.8 mm deep)	Super Tradeline
AT72D1691/U	9 in. leadwires (229 mm leadwires)	(2) screw terminals	208 Vac, 240 Vac	26.5 V.O.C.	Can be foot mounted, plate mounted on 4 x 4 in., 4 in. octagon, or 2 x 4 in. electrical boxes (transformer all above plate or 3/4 above plate); or clamp mounted via a junction box knockout.	3 7/32 in. high x 2 7/32 in. wide x 3 1/16 in. deep (81.8 mm high x 56.4 mm wide x 77.8 mm deep)	Super Tradeline

Dimensions in inches (millimeters)

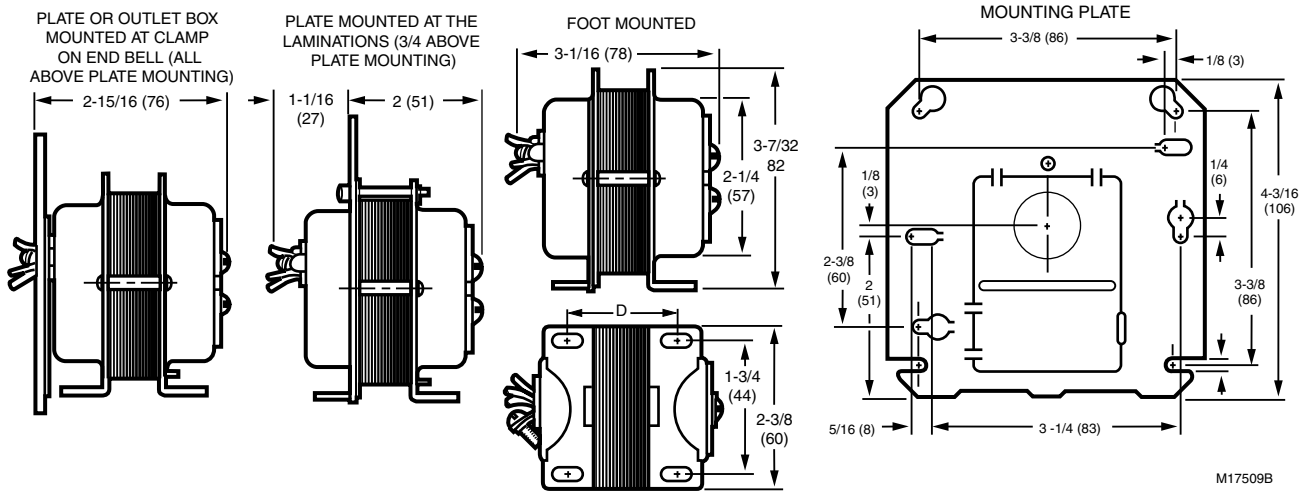

AT87 NEMA Standard Transformer

Honeywell 48 VA powers 24V air conditioning circuits and other applications that do not exceed the listed ratings.

- Meets NEC Class 2 not wet, Class 3 wet and UL 1585 requirements.
- Transformer marked NEMA Type E.
- Overload protection provided.
- Color-coded leadwires for primary connections.

Frequency: 50 Hz; 60 Hz
NEMA Rating: NEMA type E
Approximate, Dimensions: 2 15/16 in. deep x 2 7/32 in. wide (74.6 mm deep x 65.4 mm wide)
Approvals, Underwriters Laboratories Inc.: UL Component Recognized.

Approvals, CSA: Certified
Temperature Range: -20°F to +105°F (-29°C to +41°C)

Dimensions in inches (millimeters)

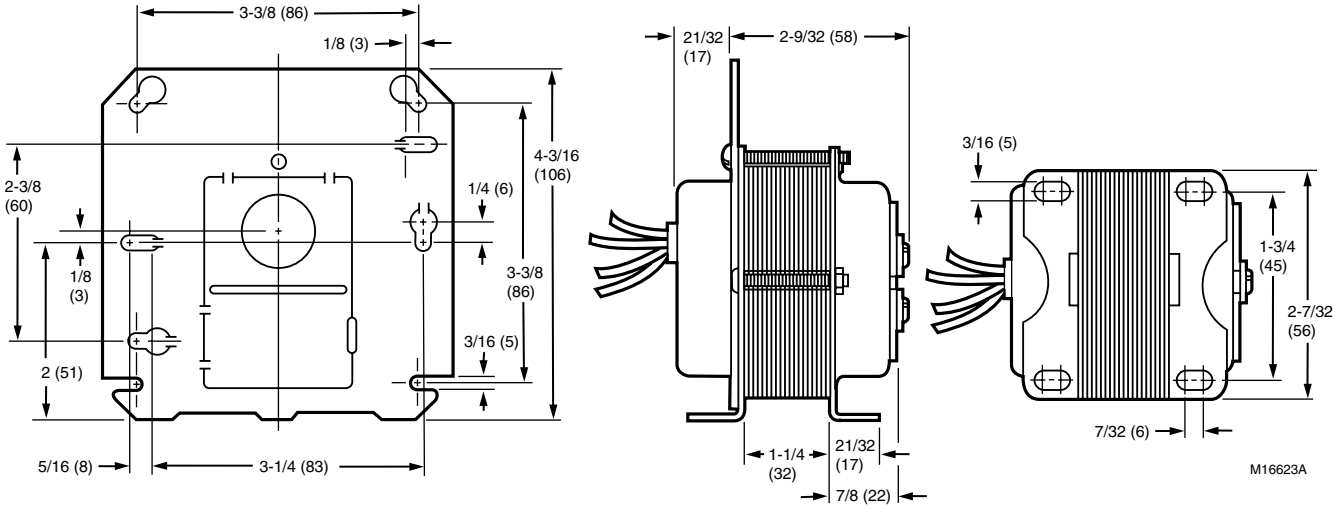

Material Number	Electrical Connections (Primary)	Electrical Connections (Secondary)	Electrical Ratings-Primary voltage	Electrical Ratings-Secondary voltage	Electrical Ratings, Output	Mounting	Tradeline Value	Includes
AT87A1049/U	12 in. leadwires (305 mm leadwires)	12 in. leadwires (305 mm leadwires)	120 Vac	26.5 V.O.C.	24 Vac at 48 VA	Foot-mounted		Energy limiting overload protection
AT87A1106/U	13 in. leadwires (330 mm leads)	(2) screw terminals	120 Vac, 208 Vac, 240 Vac	26.5 V.O.C.	24 Vac at 48 VA	Foot mounted or 4 x 4 in. plate-mounted	Super Tradeline	Built-in protection. Primary winding burnout.
AT87A1155/U	12 in. leadwires (305 mm leadwires)	12 in. leadwires (305 mm leadwires)	480 Vac	26.5 V.O.C.	24 Vac at 48 VA	Foot-mounted		Energy limiting overload protection
AT87A1189/U	12 in. leadwires (305 mm leadwires)	12 in. leadwires (305 mm leadwires)	277 Vac	26.5 V.O.C.	24 Vac at 48 VA	Foot-mounted		Energy limiting overload protection

AT88 Transformer

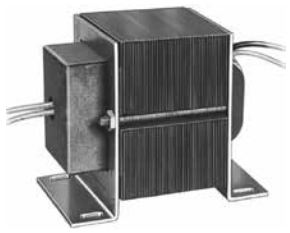

Honeywell 75 VA transformers powers 24 Vac air conditioning circuits and other applications that do not exceed the listed ratings.

- Meets NEC Class 2 not wet, Class 3 wet and U.L. 1585 requirements.
- Overload protection provided.
- Color-coded leadwires for primary connections.

Electrical Connections (Primary): 12 in. leadwires (305 mm leadwires)
Electrical Connections (Secondary): 12 in. leadwires (305 mm leadwires)
Frequency: 50 Hz; 60 Hz
Approximate, Dimensions: 2 15/16 in. high x 2 3/16 in. wide x 3 5/16 in. deep (75 mm high 56 mm wide x 84 mm deep)

Approvals, Underwriters Laboratories Inc.: UL Component Recognized.
Approvals, CSA: Certified
Temperature Range: -20°F to +105°F (-29°C to +41°C)

Dimensions in inches (millimeters)

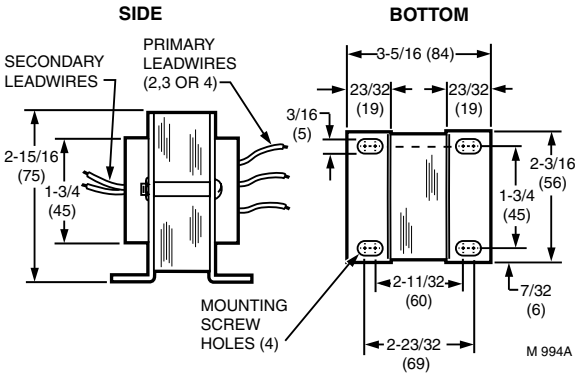

Material Number	Electrical Ratings-Primary voltage	Electrical Ratings-Secondary voltage	Electrical Ratings, Output	Mounting	Includes
AT88A1005/U	120 Vac	26.5 V.O.C.	24 Vac at 75 VA	Foot-mounted	Internally fused secondary for overload protection.
AT88A1021/U	208 Vac, 240 Vac	26.5 V.O.C.	24 Vac at 75 VA	Foot-mounted	Internally fused secondary for overload protection.
AT88A1047/U	480 Vac	26.5 V.O.C.	24 Vac at 75 VA	Foot-mounted	Internally fused secondary for overload protection.

Transformer Selection Guide

Transformers (NEMA Rated)							
Electrical Ratings - VA	**Electrical Ratings - Input Voltage**	**Product Number**	**Mounting**	**Main Connections**	**Secondary Connections**	**Frequency**	**Dimensions (in.) H x W x D**
19VA	120 Vac	AT20A1123/U	F	L	L	60Hz/50Hz	2 x 2 1/4 x 1 7/8
40VA	120 Vac	AT72D1006/U	P	L	S	60Hz/50Hz	3 7/32 x 2 7/32 x (1 1/16 into x 2 in. above plate)
	120 Vac	AT72D1089/U	F	L	S	60Hz/50Hz	3 7/32 x 2 7/32 x 3 1/16
	120 Vac	AT72D1188/U	P	L	L	60Hz/50Hz	3 7/32 x 2 7/32 x 2 15/16
	120 Vac	AT72D1683/U	M	L	S	60Hz/50Hz	3 7/32 x 2 7/32 x 3 1/16
	208 Vac, 240 Vac	AT72D1691/U	M	L	S	60Hz/50Hz	3 7/32 x 2 7/32 x 3 1/16
48VA	277 Vac	AT87A1189/U	F	L	L	60Hz/50Hz	2 15/16 x 2 7/32 x 2 1/4
	480 Vac	AT87A1155/U	F	L	L	60Hz/50Hz	2 15/16 x 2 7/32 x 2 1/4
50VA	120 Vac, 208 Vac, 240 Vac	AT87A1106/U	M	L	S	60Hz/50Hz	2 15/16 x 2 7/32 x 2 1/4

Transformers (Not NEMA Rated)								
Electrical Ratings - VA	**Electrical Ratings - Input Voltage**	**Product Number**	**Mounting**	**Main Connections**	**Secondary Connections**	**Frequency**	**Dimensions (in.) H x W x D**	**Special Features**
20VA	120 Vac	AT120B1028/U	F	L	L	60Hz	1 11/16 x 3 3/16 x 1 3/4	
	120 Vac, 208 Vac, 240 Vac	AT120A1004/U	M	L	S	60Hz	2 7/8 x 1 7/8 x 2 15/16	
40VA	120 Vac	AT140A1000/U	M	L	S	60Hz	3 3/16 x 2 3/8 x 3 1/8	
	120 Vac	AT140B1206/U	F	L	L	60Hz	1 11/16 x 3 1/2 x 1 3/4	
	120 Vac, 208 Vac, 240 Vac	AT140A1018/U	M	L	S	60Hz	3 3/16 x 2 3/8 x 3 1/8	
	120 Vac, 208 Vac, 240 Vac	AT140B1214/U	F	L	L	60Hz	1 11/16 x 3 1/2 x 1 3/4	
50VA	120 Vac, 208 Vac, 240 Vac	AT150A1007/U	M	L	S	60Hz	1 11/16 x 3 3/16 x 1 3/4	
	120 Vac, 208 Vac, 240 Vac	AT150B1146/U	F	L	L	60Hz	1 11/16 x 3 1/2 x 1 3/4	
	120 Vac, 208 Vac, 240 Vac	AT150F1022/U	M	L	L	60Hz	3 3/16 x 2 3/16 x 3 5/8	Button for resetting circuit breaker & metal end bells
	208 Vac, 277 Vac, 480 Vac	AT150F1030/U	M	L	L	60Hz	3 3/16 x 2 3/16 x 3 5/8	Button for resetting circuit breaker & metal end bells
	277 Vac	AT150B1252/U	F	L, Q	L, Q	60Hz/50Hz	1 11/16 x 3 1/2 x 1 3/4	
75VA	120 Vac	AT175B1055/U	F	L	L	60Hz	2 1/3 x 3 9/16 x 2 1/3	
	120 Vac, 208 Vac, 240 Vac	AT175A1008/U	M	L	S	60Hz	3 3/16 x 2 3/8 x 3 5/8	
	120 Vac, 208 Vac, 240 Vac	AT175F1023/U	M	L	L	60Hz	3 3/16 x 2 3/16 x 3 15/16	Button for resetting circuit breaker & metal end bells
	208 Vac, 277 Vac, 480 Vac	AT175F1031/U	M	L	L	60Hz	3 3/16 x 2 3/16 x 3 15/16	Button for resetting circuit breaker & metal end bells
	120 Vac	AT88A1005/U	F	L	L	60Hz/50Hz	2 15/16 x 2 3/16 x 3 5/16	
	208 Vac, 240 Vac	AT88A1021/U	F	L	L	60Hz/50Hz	2 15/16 x 2 3/16 x 3 5/16	
	480 Vac	AT88A1047/U	F	L	L	60Hz/50Hz	2 15/16 x 2 3/16 x 3 5/16	

Connectors Key
Q - Quick Connect
L - Leadwires
T - Terminals
S - # 6 Screw

Mounting Key
F - Foot mounting
P - Plate mounting
M - Multiple mounting options

Oil Primaries Cross Reference

Ignition Type	Universal*	Lockout Time (Sec.)	Blower Off Delay (Min)	Valve On Delay (Sec)	Alarm Contacts	Manual Trip Lever w/ LED Indicator	Honeywell	Beckett	Carlin Product	White-Rodgers	R7184U Service Part
Interrupted	R7284U1004/U	15	2/4/6	0/15	Yes	Yes	R7184U1004, R7184P1031, R7184P1049, R7184P1056, R7184P1064, R7184P1072	7505P125M	50200-02S, 602000-2S, 6020002S015120, 6020002S030015, 6020002S030030, 6020002S030120, 6020002S030300, 6020002S030010		R7184U1004
	R7284U1004/U	15			Yes	Yes	R7184A1026, R7184A1075, R7184A1000	7505A000	40200-02S	669-640, 669-670	R7184U1004
	R7284U1004/U	15		15	Yes	Yes	R7184B1024, R7184B1032, R7184B1016	7505B1500			R7184U1004
	R7284U1004/U	15	0.25	15	Yes	Yes	R7184P1080, R7184P1098	7505P1515			R7184U1004
	R7284U1004/U	30	2/4/6	0/15	Yes	No	R7184U1012				R7184U1012
	R7284U1004/U	30				No	R7184A1018, R7184A1034		42230-02S	669-440, 669-445, 669-470, 669-540	R7184U1012
	R7284U1004/U	45	2/4/6	0/15	Yes	No	R7184U1020				R7184U1020
	R7284U1004/U	45					R7184A1042				R7184U1020
Intermittent	R7284U1004/U	15			Yes		R8184G1294, R8184G1302, R8184G4066, R8184G4074, R8184G4033, R8184G4090, R8184G1427, R8184G4058	7505A0000		668-601, 668-670	R7184U1004
	R7284U1004/U	30					R8184G1393, R8184G1302, R8184G4074, R8184G4033			668-501	R7184U1012
	R7284U1004/U	45				Yes	R8184G1286, R8184G1427, R8184G1458, R8184G4009, R8184G4025, R8184G4082, R8184G4108		48245-S	668-401, 668-415, 668-430, 668-515	R7184U1020
	R7284U1004/U				Yes					668-430	

* The R7284 does not have integrated alarm contacts

R7284B, U Interrupted Electronic Oil Primary

The R7284B, U Electronic Oil Primary is a line voltage, safety rated, interrupted and intermittent ignition oil primary control for residential oil fired burners used in boilers, forced air furnaces and water heaters. The R7284B, U used with a cad cell flame sensor operates an oil burner, spark igniter, and optional oil valve. The control works with a low voltage and optional high voltage thermostat. The primary controls fuel oil, senses flame, controls ignition spark (either interrupted or intermittent) and notifies through the EnviraCOM™ bus a remote alarm circuit when in lockout.

The R7284 Series of Oil Primary Controls can be used with both hydronic and forced air systems. When used wth hydronic systems, line voltage switching Aquastat® Controllers normally provide for the starting and stopping of the combustion sequences. With forced air systems, both mechanical and electronic low voltage thermostats control the starting and stopping of the combustion process.

Mounting: Junction box on main burner
Electrical Connections: Burner motor, oil valve, ignition, cad cell, limit, thermostat, alarm
Electrical Rating, Contacts (full load): 7.4 A @ 120 Vac; 3.7 A @ 240 Vac
Electrical Rating, Contacts (locked rotor): 44.4 A @ 120 Vac; 22.2 A @ 240 Vac

Approximate, Dimensions: 4 5/32 in. long x 4 11/32 in. wide x 2 1/2 in. high (105.4 mm long x 110.5 mm wide x 63.5 mm high)
Temperature Range: -40°F to +147°F (-40°C to +64°C)
Approvals, Underwriters Laboratories Inc.: UL and cUL Component Recognized

Material Number	Ignition Type	Timing, Safety Switch	Display	Description
R7284B1024/U	Interrupted	15 sec.	Using LED only	Electronic Oil Primary with 15 seconds lock out timing
R7284U1004/U	Interrupted and Intermittent	Settable 15, 30 or 45 sec.	2 Line LCD display	Electronic Oil Primary with selectable 15, 30 or 45 second lock out timing, selectable valve and blower delays, and two line LCD display

R8184G Protectorelay® Oil Burner Control

Model	Electrical Ratings	
	Full Load	Locked Rotor
15 Sec, 30 Sec	10 A @ 120 Vac, 60 Hz; 5 A @ 240 Vac, 60 Hz	60 A @ 120 Vac, 60 Hz; 30 A @ 240 Vac, 60 Hz
45 Sec	7.4 A @ 120 Vac, 60 Hz; 3.7 A @ 240 Vac, 60 Hz	44 A @ 120 Vac, 60 Hz; 22.2 A @ 240 Vac, 60 Hz

Protectorelay® Oil Burner Control provides automatic, nonrecycling control of an intermittent ignition oil burner system.

- Controls oil burner, oil valve (if desired) and the ignition transformer in response to a call for heat.
- Solid state flame sensing circuit.
- LED on terminal strip indicates system lockout (available on some models).
- Remote lockout indication (available on some models).
- Enclosed safety switch with external reset button.
- Manual trip lever opens safety switch for system maintenance.
- Mounts on standard 4 x 4 in. junction box; select models may be mounted directly on burner housing.
- C554A Cadmium Sulfide Flame Detector and 24 Vac thermostat required.

Ignition Type: Intermittent
Mounting: For mounting on a standard 4 in. x 4 in. junction box or direct mounting on burner housing.
Approximate, Dimensions: 4 3/8 in. high x 4 1/8 in. wide x 2 1/2 in. deep (111 mm high x 104 mm wide x 64 mm deep)
Temperature Range: -40°F to +130°F (-40°C to +54°C)
Remote Lockout Indication Maximum Load: 0.2 amp @ 30 Vac 60 Hz
Remote Dry Contact Maximum Load: 25 VA @ 30 Vac, 60 Hz
Approvals, CSA: File no. 095329
Approvals, Underwriters Laboratories Inc.: UL Component Recognized; File no. MP268, Vol. 35 Sec. 1, 3

Material Number	Timing, Safety Switch	Comments	Includes
R8184G4009/U	45 sec.	With LED for lockout indication, and manual trip lever on safety switch to assure burner shutdown during servicing.	
R8184G4033/U	30 sec.	With LED for lockout indication, and manual trip lever on safety switch to assure burner shutdown during servicing.	
R8184G4066/U	15 sec.	With LED for lockout indication, and manual trip lever on safety switch to assure burner shutdown during servicing.	
R8184G4074/U	30 sec.	With LED for lockout indication, and manual trip lever on safety switch to assure burner shutdown during servicing.	
R8184G4082/U	45 sec.	With manual trip lever on safety switch to assure burner shutdown during servicing. Includes remote alarm dry contacts.	Remote Alarm Dry Contacts

R8184M Protectorelay® Oil Burner Control

Operates the oil burner and oil valve (if desired) in response to a call for heat from a low voltage control circuit.

- Intermittent ignition is on while the burner is on.
- Solid state flame sensing circuit.
- External button to manually reset safety switch after lockout.
- Enclosed safety switch must be manually reset after safety shutdown.
- R8184M includes 40 VA transformer and Y and G terminals for connection of cooling equipment.
- Mounts on standard 4 x 4 in. junction box.
- C554A Cadmium Sulfide Flame Detector and a 24 Vac thermostat required.

Ignition Type: Intermittent
Electrical Rating, Contacts (full load): 7.4 A @ 120 Vac; 3.7 A @ 240 Vac
Electrical Rating, Contacts (locked rotor): 44.4 A @ 120 Vac; 22.2 A @ 240 Vac

Approximate, Dimensions: 4 3/8 in. high x 4 1/8 in. wide x 2 1/2 in. deep (111 mm high x 104 mm wide x 64 mm deep)
Temperature Range: -40°F to +130°F (-40°C to +54°C)
Approvals, Underwriters Laboratories Inc: UL Component Recognized; File no. MP268, guide no. MCCZ2

Material Number	Timing, Safety Switch	Mounting	Description
R8184M1051/U	45 sec.	Mounts on standard 4 x 4 in. junction box	Protectorelay® Oil Burner Control with 45 seconds lock out timing

RA116; RA117 Protectorelay® Controls

One-piece, stack-mounted oil burner primary controls that cycle the burner on and shut down the burner on flame loss or system malfunction.

- Combine a Protectorelay® unit for cycling the burner and a Pyrostat® flame detector for sensing temperature changes of flue gases up to 1000°F (556°C).
- Manual reset of safety switch required after ignition failure completely shuts off main burner.
- Include manual trip safety switch to assure burner shutdown during servicing.
- Mount with flange for mounting on curved or flat surfaces.
- Use with line voltage or 24 Vac Control Circuit.

Approximate, Dimensions: 6 in. high x 5 3/16 in. wide x 3 3/16 in. deep (152 mm high x 132 mm wide x 81 mm deep)
Comments: Max insertion length: 5 1/2 in.
Approvals, Underwriters Laboratories Inc.: UL Listed; File no. MP268, Guide no. MCCZ
Approvals, CSA: CSA Certified; File no. LR95329-1

Material Number	Timing, Safety Switch	Mounting	Ignition Type	Description
RA116A1055/U	75 sec. Nominal	Mount with flange for mounting on curved or flat surfaces.	Intermittent	Protectorelay® Oil Burner Control with 75 seconds lock out timing
RA117A1047/U	75 sec. Nominal	Mount with flange for mounting on curved or flat surfaces.	Interrupted	Protectorelay® Oil Burner Control with 75 seconds lock out timing

Oil Primary Control Parts

Material Number	Description
120320/U	Replacement Cell Assembly (7.5 mA at 2 ft-candles)
130367/U	Replacement Cell Assembly (12 mA at 2 ft-candles)

C554 Cadmium Sulfide Flame Detector

The Cadmium Sulfide Flame Detector (cad cell) is a photoconductive flame detector used with oil primary controls such as R4166, R4184, R8182, R8184, R8185, R8404 and R8991.

- On flame failure, the light sensitive cadmium sulfide cell, in conjunction with flame sensing circuitry, causes the Protectorelay® control to shutdown the main oil burner.
- Glass-to-metal hermetic seal in plug-in cell prevents deterioration by humidity, soot or oil fumes.
- Replaceable CAD Cell

Approximate, Dimensions: 1 7/8 in. high x 1 in. long x 1/2 in. wide (47 mm high x 25 mm long x 13 mm wide)
Ambient Temperature Range: 140°F maximum (1524 mm)
Approvals, Underwriters Laboratories Inc.: UL Listed: File no. MP268, Vol. 39, Sec. 1, Guide MCCZ
Approvals, CSA: CSA Component Listed: File no. LR95329-1
Sensitivity: 12mA @ 2 ft-candles

Material Number	Lead Length	Electrical Connections	Mounting	Includes	Used With
C554A1463/U	60 in. (1524 mm)	lead wires: NEC Class 1; Includes 2 flag 1/4 in. quick connects.	Type R bracket	A, B, E, J and P mounting brackets and fuel line adaptor	R4166, R4184, R8182, R8184, R8185, R8404, R8991, R7997, R7184, R7284
C554A1794/U	60 in. (152.4 cm)	lead wires: NEC Class 1	Type R bracket	Type “E” mounting bracket and fuel line adaptor	R4166, R4184, R8182, R8184, R8185, R8404, R8991, R7997, R7184, R7284

C554A Accessories and Replacement Parts

Material Number	Description
120320/U	Replacement Cell Assembly (7.5 mA at 2 ft-candles)
130367/U	Replacement Cell Assembly (12 mA at 2 ft-candles)
4074BJS/U	Oil line mounting bracket assembly, including nut and screw

V4046A, B Magnetic Valves

For ON-OFF control of oil flow to domestic oil burner equipment. Both delayed and non-delayed oil valves.

- Power interruption closes the valve immediately.
- Mount directly to pipeline or on support bracket.

Type of Fuel: #2 fuel oil
Body Pattern: Straight through
Mounting: Directly in pipe or on support bracket
Materials: Body – Aluminum
Power Consumption: 8 W
Electrical Connections: Two 36-in. (914 mm) leadwires, 1/2 in. conduit bushing
Pipe Connection: NPT
Operating Temperature Range: 32°F to 115°F; 125°F max Fluid (0°C to 46°C; 54°C max Fluid)
Approximate, Dimensions: 2 3/4 in. high x 1 5/8 in. wide x 2 5/8 in. deep (70 mm high x 41 mm wide x 67 mm deep)
Approvals, Underwriters Laboratories Inc.: Listed: File no. MH1639, vol. 3, sec. 3, Guide no. YIOZ
Approvals, CSA: File no. 095329
Approvals, Factory Mutual: Listed: Report 16960

Material Number	Voltage	Frequency	Maximum Safe Operating Pressure (psi)	Maximum Safe Operating Pressure (kPa)	Pipe Size (inch)	Valve Opening Time	Valve Closing Time	Current Ratings
V4046A1074/U	120 Vac	60 Hz	300 psi	2068 kPa	1/8 in.	3 to 8 sec	1 sec max	0.115 max amps at rated Vac/Hz

Magnetic Valve Replacement Parts

Material Number	Description
116649A/U	Replacement coil for 120V; 60Hz V4046A
116671A/U	Replacement coil for 120V, 60Hz V4046B

L4029 High Limit Controller

L4029E Reset Limit Control opens a line or low voltage circuit if the air temperature reaches a critical level. L4029E acts as a fire thermostat in the ducts of AC & ventilating systems. If the air temperature indicates a fire, the fan is shut down.

- Shuts off the fan when air temperature is indicative of fire.
- Internal snap-acting switch actuated by a bimetal strip inserted directly into the air stream responds rapidly to temperature changes.
- Requires manual reset.

Switching Action: Normally closed SPST switch opens on temperature rise to the set point. Switch must be manually reset to operate.

Approvals, Underwriters Laboratories Inc.: Listed: File No. MP466, Vol. 8, Guide No. MBPR2

Approvals, CSA: Certified: File No. LR95329-5

Dimensions in inches (millimeters)

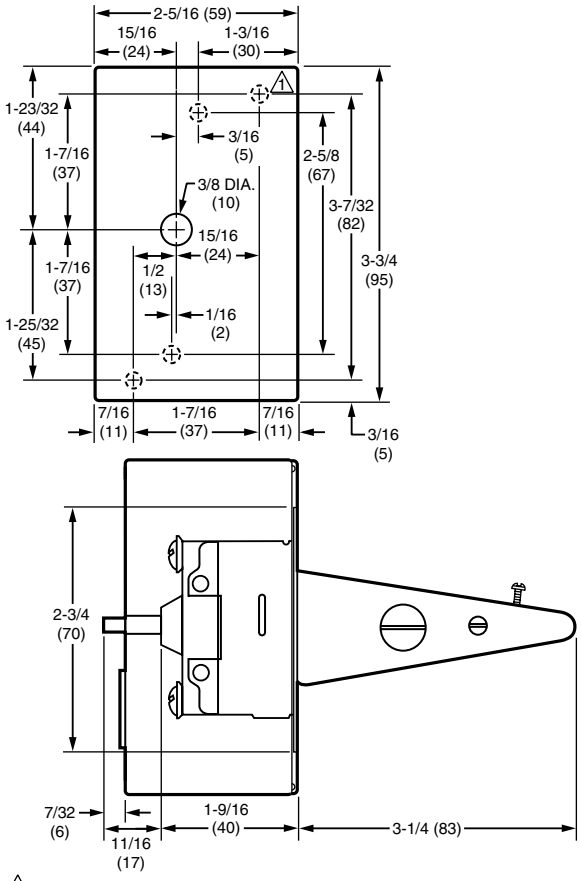

1 3/16 (5) DIAMETER MOUNTING HOLES L4029E WITH CASE AND COVER.

M27077

Material Number	Element Insertion Length	Electrical Ratings	Pilot Duty Ratings	Temperature Ratings	Tradeline Value
L4029E1011/U	3 in. (76 mm)	Limit- (AFL) – 2 A @ 30 Vac: 10 A @ 120 Vac: 5 A @ 240 Vac; Limit- (ALR) – 60 A @ 120 Vac: 30 A @ 240 Vac	0.25 A @ 0.25 to 12 Vdc	Maximum Ambient – At switch: 190°F: At element: 350°F; High Limit Stop – 135°F (Maximum Ambient – At switch 88°C: At element: 177°C)	
L4029E1029/U	3 in. (76 mm)	Limit- (AFL) – 2 A @ 30 Vac: 10 A @ 120 Vac: 5 A @ 240 Vac; Limit- (ALR) – 60 A @ 120 Vac: 30 A @ 240 Vac	0.25 A @ 0.25 to 12 Vdc	Maximum Ambient – At switch: 190°F: At element: 350°F; High Limit Stop – 200°F (Maximum Ambient – At switch 88°C: At element: 177°C)	
L4029E1045/U	3 in. (76 mm)	Limit- (AFL) – 2 A @ 30 Vac: 10 A @ 120 Vac: 5 A @ 240 Vac; Limit- (ALR) – 60 A @ 120 Vac: 30 A @ 240 Vac	0.25 A @ 0.25 to 12 Vdc	Maximum Ambient – At switch: 190°F: At element: 350°F; High Limit Stop – 240°F (Maximum Ambient – At switch 88°C: At element: 177°C)	
L4029E1219/U	3 in. (76 mm)	Limit- (AFL) – 2 A @ 30 Vac: 10 A @ 120 Vac: 5 A @ 240 Vac; Limit- (ALR) – 60 A @ 120 Vac: 30 A @ 240 Vac	0.25 A @ 0.25 to 12 Vdc	Maximum Ambient – At switch: 190°F: At element: 350°F; High Limit Stop – 165°F (Maximum Ambient – At switch 88°C: At element: 177°C)	Tradeline
L4029E1227/U	3 in. (76 mm)	Limit- (AFL) – 2 A @ 30 Vac: 10 A @ 120 Vac: 5 A @ 240 Vac; Limit- (ALR) – 60 A @ 120 Vac: 30 A @ 240 Vac	0.25 A @ 0.25 to 12 Vdc	Maximum Ambient – At switch: 190°F: At element: 350°F; High Limit Stop – 125°F (Maximum Ambient – At switch 88°C: At element: 177°C)	Tradeline
L4029E1250/U	3 in. (76 mm)	Limit- (AFL) – 2 A @ 30 Vac: 10 A @ 120 Vac: 5 A @ 240 Vac; Limit- (ALR) – 60 A @ 120 Vac: 30 A @ 240 Vac	0.25 A @ 0.25 to 12 Vdc	Maximum Ambient – At switch: 190°F: At element: 350°F; Fan-on – 126°F; Fan-off – 100°F; High Limit Stop – 116°F (Maximum Ambient – At switch 88°C: At element: 177°C; Fan-on – 52°C; Fan-off – 38°C)	

L4064 Fan and Limit Controllers

For control of high limit and fan motor in all types of forced air heating systems.

- Three wiring terminal options available for easy installation.
- Push-in receptacles for stripped wire.
- Female receptacles for 1/4 inch male flag connectors.
- Auxiliary screw terminals.
- Field adjustable fan and high limit settings.
- L4064B and R models have a manual fan switch that overrides the fan control to keep the fan running continuously.
- TRADELINE models with mounting adapters for easy installation and strain relief bushings to protect wiring from field abuse.

Application: Forced warm air heating systems
Switching Action: Fan switch makes and high limit switch breaks on temperature rise.
Dimensions: 4 9/32 in. high x 3 in. wide x 1 19/32 in. deep excluding element (109 mm high x 76 mm wide x 40 mm deep excluding element)
Operating Temperature Range: -40°F to +190°F (-40°C to +88°C)
Differential Temperature Range: High limit 25°F (High limit 14°C)
Tradeline Value: Tradeline
Approvals, Underwriters Laboratories Inc.: Listed File MP466, Guide MBPR
Approvals, CSA: Certified: File No. LR1622

Accessories:
50077438-001/U – Universal Swivel Bracket for L4064

Material Number	Element Insertion Length	Electrical Ratings	Pilot Duty Ratings	Mounting	Temperature Ratings	Comments
L4064B2210/U	11 1/2 in. (292 mm)	Fan- (AFL) – 14 A @ 120 Vac: 7 A @ 240 Vac; Fan- (ALR) – 84 A @ 120 Vac: 42 A @ 240 Vac; Limit- (AFL) – 8 A @ 120 Vac: 4 A @ 240 Vac; Limit- (ALR) 48 A @ 120 Vac: 24 A @ 240 Vac	0.25 A @ 0.25 to 12 Vdc; 2 A @ 24 Vac	Surface or universal mounting bracket available (50077438-001/U)	Maximum Ambient – At switch: 190°F: At element: 350°F; High Limit – 100°F to 250°F; Fan-on – 65°F to 215°F; Fan-off – 50°F to 200°F; High Limit Stop – 200°F; Fan-on Stop – 125°F; Fan-off Stop – 100°F (Maximum Ambient – At switch 88°C: At element: 177°C; High Limit – 38°C to 121°C; Fan-on – 18°C to 102°C; Fan-off – 10°C to 93°C)	Turns fan on and off according to plenum temperature via helical bimetal sensing element. High limit stop set at 200°F (93°C). Breakaway Jumper included. Includes manual and automatic fan on/ off settings. Replaces L4064A,B,E.
L4064B2228/U	5 in. (127 mm)	Fan- (AFL) – 14 A @ 120 Vac: 7 A @ 240 Vac; Fan- (ALR) – 84 A @ 120 Vac: 42 A @ 240 Vac; Limit- (AFL) – 8 A @ 120 Vac: 4 A @ 240 Vac; Limit- (ALR) 48 A @ 120 Vac: 24 A @ 240 Vac	0.25 A @ 0.25 to 12 Vdc; 2 A @ 24 Vac	Surface or universal mounting bracket available (50077438-001/U)	Maximum Ambient – At switch: 190°F: At element: 350°F; High Limit – 100°F to 250°F; Fan-on – 65°F to 215°F; Fan-off – 50°F to 200°F; High Limit Stop – 200°F; Fan-on Stop – 125°F; Fan-off Stop – 100°F (Maximum Ambient – At switch 88°C: At element: 177°C; High Limit – 38°C to 121°C; Fan-on – 18°C to 102°C; Fan-off – 10°C to 93°C)	Turns fan on and off according to plenum temperature via helical bimetal sensing element. High limit stop set at 200°F (93°C). Breakaway Jumper included. Includes manual and automatic fan on/ off settings. Replaces L4064A,B,E.
L4064B2236/U	8 in. (203 mm)	Fan- (AFL) – 14 A @ 120 Vac: 7 A @ 240 Vac; Fan- (ALR) – 84 A @ 120 Vac: 42 A @ 240 Vac; Limit- (AFL) – 8 A @ 120 Vac: 4 A @ 240 Vac; Limit- (ALR) 48 A @ 120 Vac: 24 A @ 240 Vac	0.25 A @ 0.25 to 12 Vdc; 2 A @ 24 Vac	Surface or universal mounting bracket available (50077438-001/U)	Maximum Ambient – At switch: 190°F: At element: 350°F; High Limit – 100°F to 250°F; Fan-on – 65°F to 215°F; Fan-off – 50°F to 200°F; High Limit Stop – 200°F; Fan-on Stop – 125°F; Fan-off Stop – 100°F (Maximum Ambient – At switch 88°C: At element: 177°C; High Limit – 38°C to 121°C; Fan-on – 18°C to 102°C; Fan-off – 10°C to 93°C)	Turns fan on and off according to plenum temperature via helical bimetal sensing element. High limit stop set at 200°F (93°C). Breakaway Jumper included. Includes manual and automatic fan on/ off settings. Replaces L4064A,B,E.

Material Number	Element Insertion Length	Electrical Ratings	Pilot Duty Ratings	Mounting	Temperature Ratings	Comments
L4064R1134/U	11 1/2 in. (292 mm)	Fan- (AFL) – 14 A @ 120 Vac: 7 A @ 240 Vac; Fan- (ALR) – 84 A @ 120 Vac: 42 A @ 240 Vac; Limit- (AFL) – 8 A @ 120 Vac: 4 A @ 240 Vac; Limit- (ALR) 48 A @ 120 Vac: 24 A @ 240 Vac	0.25 A @ 0.25 to 12 Vdc; 2 A @ 24 Vac	Surface mounting or bracket (rigid or swivel)	Maximum Ambient – At switch: 190°F: At element: 250°F above limit setting; High Limit – 150°F to 350°F; Fan-on – 100°F to 305°F; Fan-off – 80°F to 290°F; High Limit Stop – 250°F; Fan-on Stop – 125°F; Fan-off Stop – 100°F (Maximum Ambient – At switch: 88°C: At element: 121°C above limit setting; High Limit – 66°C to 177°C; Fan-on – 38°C to 152°C; Fan-off – 27°C to 143°C)	Turns fan on and off according to plenum temperature. With helical bimetal sensing element. High limit stop set at 250°F (121°C). Small Case. With manual fan-auto switch.
L4064R1142/U	8 in. (203 mm)	Fan- (AFL) – 14 A @ 120 Vac: 7 A @ 240 Vac; Fan- (ALR) – 84 A @ 120 Vac: 42 A @ 240 Vac; Limit- (AFL) – 8 A @ 120 Vac: 4 A @ 240 Vac; Limit- (ALR) 48 A @ 120 Vac: 24 A @ 240 Vac	0.25 A @ 0.25 to 12 Vdc; 2 A @ 24 Vac	Surface mounting or bracket (rigid or swivel)	Maximum Ambient – At switch: 190°F: At element: 250°F above limit setting; High Limit – 150°F to 350°F; Fan-on – 100°F to 305°F; Fan-off – 80°F to 290°F; High Limit Stop – 250°F; Fan-on Stop – 125°F; Fan-off Stop – 100°F (Maximum Ambient – At switch: 88°C: At element: 121°C above limit setting; High Limit – 66°C to 177°C; Fan-on – 38°C to 152°C; Fan-off – 27°C to 143°C)	Turns fan on and off according to plenum temperature. With helical bimetal sensing element. High limit stop set at 250°F (121°C). Small Case. With manual fan-auto switch.
L4064R1159/U	5 in. (127 mm)	Fan- (AFL) – 14 A @ 120 Vac: 7 A @ 240 Vac; Fan- (ALR) – 84 A @ 120 Vac: 42 A @ 240 Vac; Limit- (AFL) – 8 A @ 120 Vac: 4 A @ 240 Vac; Limit- (ALR) 48 A @ 120 Vac: 24 A @ 240 Vac	0.25 A @ 0.25 to 12 Vdc; 2 A @ 24 Vac	Surface mounting or bracket (rigid or swivel)	Maximum Ambient – At switch: 190°F: At element: 250°F above limit setting; High Limit – 150°F to 350°F; Fan-on – 100°F to 305°F; Fan-off – 80°F to 290°F; High Limit Stop – 250°F; Fan-on Stop – 125°F; Fan-off Stop – 100°F (Maximum Ambient – At switch: 88°C: At element: 121°C above limit setting; High Limit – 66°C to 177°C; Fan-on – 38°C to 152°C; Fan-off – 27°C to 143°C)	Turns fan on and off according to plenum temperature. With helical bimetal sensing element. High limit stop set at 250°F (121°C). Small Case. With manual fan-auto switch.

Dimensions in inches (millimeters)

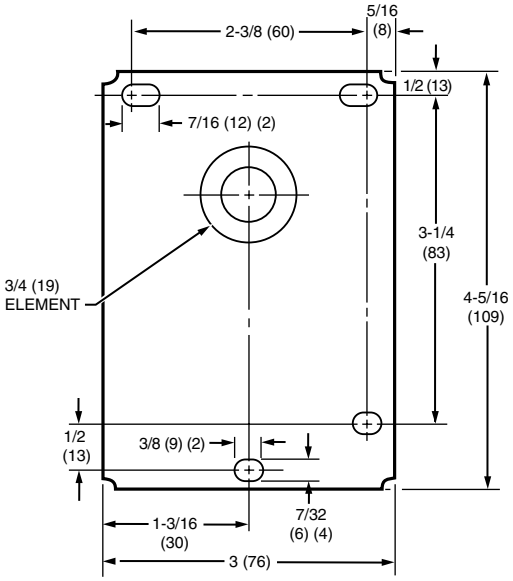

NOTE: OVERALL DEPTH WITH FAN SWITCH IS 2 INCHES (51MM); MODELS LESS FAN SWITCH ARE 1-5/8 INCHES (41MM).

M16829

Dimensions in inches (millimeters)

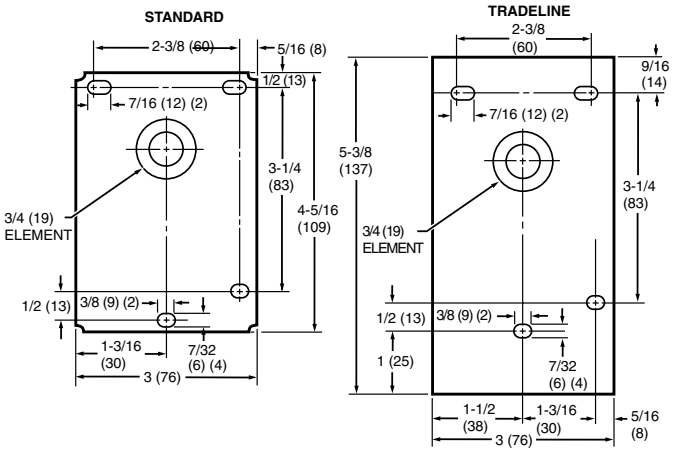

NOTE: OVERALL DEPTH WITH FAN SWITCH IS 2 INCHES (51MM); MODELS LESS FAN SWITCH ARE 1-5/8 INCHES (41MM).

M23227

L4064 Accessories

Material Number	Application	Mounting	Materials	Comments	Used With
50077438-001/U	Universal Swivel Bracket for L4064	Universal Swivel Bracket	Contains rolled stamped steel riveted between two sheet metal brackets	Replaces: 272569A/B, 110265A/U, 129250AA/U, 129250B/B, 129250B/U, and 27262/U	L4064 Fam and Limit Controls

L4006; L6006 Aquastat Controller

Approvals, CSA: File No. 095329

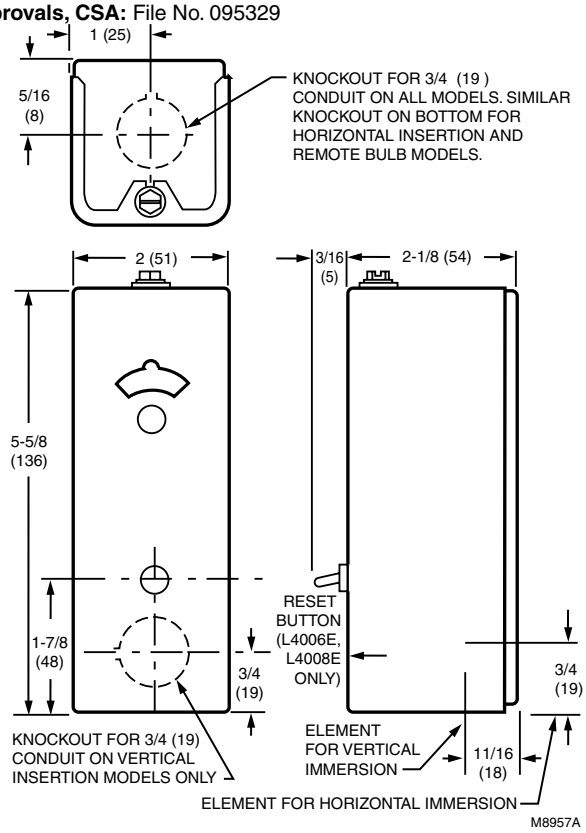

Aquastat® Controllers are immersion type devices for limiting or regulating the temperature of liquids in boilers, storage tanks, and other applications where temperature control is required.

- Totally enclosed Micro Switch™ snap-acting switches operate on temperature rise to setpoint.
- Visible control point scale and external adjustment screw permit easy setting.
- Horizontal or vertical insertion of the sensing element.
- Direct or well immersion of the sensing element.
- Models available for strap-on mounting.
- Remote bulb model may be used to sense air temperature in ducts and in outside air sensing applications.
- Select models have wells.
- UL limit rated device.

Temperature Range: Maximum – 150°F (Maximum – 66°C)
Bulb Size: 3/8 in. x 2 7/8 in. copper (10 mm x 73 mm copper)
Electrical Ratings:
At Full Load – 8 A @ 120 Vac: 5.1 A @ 240 Vac;
At Locked Rotor – 48 A @ 120 Vac: 30.6 A @ 240 Vac
Millivolt – 0.25 A @ 0.25 to 12 Vdc
Dimensions: Case – 5 5/8 in. high x 2 in. wide x 2 1/8 in. deep (Case – 143 mm high x 51 mm wide x 54 mm deep)
Approvals, Underwriters Laboratories Inc.: UL Component Recognized: File No. MP466, Vol. 6, Sec.1, Guide No. MBPR2

Material Number	Application	Switching Action	Operating Temperature Range	Differential Temperature	Well Spud Size	Capillary Length	Mounting	Includes
L4006A1009/U	High or Low limit	SPST, contacts break on temperature rise.	100°F to 240°F (38°C to 116°C)	5°F Fixed (3°C fixed)	1/2 in. NPT (13 mm NPT)	1 1/2 in. (38 mm)	Horizontal or Vertical	1/2 in. well - 123869A
L4006A1017/U	High or Low limit	SPST, contacts break on temperature rise.	100°F to 240°F (38°C to 116°C)	5°F to 30°F adj. (3°C to 17°C adj.)	1/2 in. NPT (13 mm NPT)	1 1/2 in. (38 mm)	Horizontal or Vertical	1/2 in. well - 123869A
L4006A1132/U	High or Low limit	SPST, contacts break on temperature rise.	100°F to 240°F (38°C to 116°C)	5°F Fixed (3°C fixed)	3/4 in. NPT (19 mm NPT)	3 in. (76 mm)	Horizontal or Vertical	Stop factory-set at 160°F (71°C); 3/4 in. well - 123871A
L4006A1678/U	High or Low limit	SPST, contacts break on temperature rise.	100°F to 240°F (38°C to 116°C)	5°F to 30°F adj. (3°C to 17°C adj.)	–	3 in. (76 mm)	Horizontal or Vertical	Stop factory-set at 240°F (116°C); Heat-conductive compound
L4006A1959/U	High or Low limit	SPST, contacts break on temperature rise.	40°F to 180°F (4°C to 82°C)	5°F Fixed (3°C fixed)	–	3 in. (76 mm)	Horizontal or Vertical	Heat-conductive compound
L4006A1967/U	High or Low limit	SPST, contacts break on temperature rise.	100°F to 240°F (38°C to 116°C)	5°F to 30°F adj. (3°C to 17°C adj.)	1/2 in. (13 mm)	1 1/2 in. (38 mm)	Horizontal or Vertical	1/2 in. well - 123869A; Stop factory-set at 240°F (116°C)
L4006A2007/U	High or Low limit	SPST, contacts break on temperature rise.	100°F to 240°F (38°C to 116°C)	5°F to 30°F adj. (3°C to 17°C adj.)	–	3 in. (76 mm)	Horizontal	–
L4006B1007/U	Circulator	SPST, contacts make on temperature rise.	100°F to 240°F (38°C to 116°C)	5°F Fixed (3°C fixed)	1/2 in. (13 mm)	1 1/2 in. (38 mm)	Horizontal or Vertical	1/2 in. well - 123869A

Material Number	Application	Switching Action	Operating Temperature Range	Differential Temperature	Well Spud Size	Capillary Length	Mounting	Includes
L4006B1155/U	Circulator	SPST, contacts make on temperature rise.	100°F to 240°F (38°C to 116°C)	5°F to 30°F adj. (3°C to 17°C adj.)	–	3 in. (76 mm)	Horizontal or Vertical	Stop factory-set at 240°F (116°C); Heat-conductive compound
L4006B1163/U	Circulator	SPST, contacts make on temperature rise.	100°F to 240°F (38°C to 116°C)	5°F to 30°F adj. (3°C to 17°C adj.)	–	3 in. (76 mm)	Horizontal or Vertical	–
L4006E1067/U	High Limit; Manual Reset	SPST, contacts break on temperature rise.	130°F to 270°F (54°C to 132°C)	Manual Reset	–	3 in. (76 mm)	Horizontal or Vertical	Heat-conductive compound; Stop factory-set at 250°F (121°C); Well adapter
L4006E1091/U	High Limit; Manual Reset	SPST, contacts break on temperature rise.	130°F to 270°F (54°C to 132°C)	Manual Reset	–	3 in. (76 mm)	Horizontal or Vertical	–
L4006E1109/U	High Limit; Manual Reset	SPST, contacts break on temperature rise.	130°F to 270°F (54°C to 132°C)	Manual Reset	–	1 1/2 in. to 3 in. (38 mm to 76 mm)	Horizontal or Vertical	–
L4006E1117/U	High Limit; Manual Reset	SPST, contacts break on temperature rise.	100°F to 240°F (38°C to 116°C)	Manual Reset	3/4 in. - 14 NPT (19 mm - 14 NPT)	1 1/2 in. (38 mm)	Horizontal or Vertical	3/4 in. well - 123870A
L4006E1125/U	High Limit; Manual Reset	SPST, contacts break on temperature rise.	100°F to 200°F (38°C to 93°C)	Manual Reset	–	3 in. (76 mm)	Horizontal or Vertical	–
L4006H1004/U	High Limit; strap-on mounting on well mount.	SPST, contacts break on temperature rise.	100°F to 240°F (38°C to 116°C)	Manual Reset	–	1 1/2 in. (38 mm)	Horizontal or Vertical	Bracket for strap-on mounting; Heat-conductive compound; Stop factory-set at 240°F (116°C)
L6006A1012/U	Circulator Control and High Limit or Low Limit	SPDT	100°F to 240°F (38°C to 116°C)	5°F to 30°F adj. (3°C to 17°C adj.)	1/2 in. (13 mm)	1 1/2 in. (38 mm)	Horizontal or Vertical	1/2 in. well - 123869A
L6006A1145/U	Circulator Control and High Limit or Low Limit	SPDT	100°F to 240°F (38°C to 116°C)	5°F to 30°F adj. (3°C to 17°C adj.)	–	3 in. (76 mm)	Horizontal	Stop factory-set at 240°F (116°C); Heat-conductive compound
L6006A1244/U	Circulator Control and High Limit or Low Limit	SPDT	100°F to 240°F (38°C to 116°C)	5°F to 30°F adj. (3°C to 17°C adj.)	–	3 in. (76 mm)	Horizontal or Vertical	–
L6006C1018/U	Circulator Control and High Limit and Low Limit	SPDT	65°F to 200°F (18°C to 93°C)	5°F to 30°F adj. (3°C to 17°C adj.)	–	–	Horizontal or Vertical Surface mounting	Stop factory-set at 200°F (93°C)
L6006C1034/U	Circulator and High and Low Limit	SPDT	65°F to 200°F (18°C to 93°C)	5°F to 30°F adj. (3°C to 17°C adj.)	–	–	Horizontal or Vertical Surface mounting	–

L4008; L6008 Remote Bulb Controller

For limiting or regulating temperature of liquids in boilers or tanks. Can also sense duct or outside air temperature.

- Remote temperature sensing element detects and responds rapidly to temperature changes.
- Totally enclosed Micro Switch™ snap-acting switch.
- Visible control point scale and external adjustment screw permit easy setting.
- Horizontal and/or vertical mounting of the remote element into boiler, tank, or other container unless otherwise noted.
- UL and CSA listed limit device.

Bulb Size: 3/8 in. x 2 7/8 in. copper (10 mm x 73 mm copper)
Electrical Ratings:
At Full Load – 8 A @ 120 Vac: 5.1 A @ 240 Vac;
At Locked Rotor – 48 A @ 120 Vac: 30.6 A @ 240 Vac
Millivolt – 0.25 A @ 0.25 to 12 Vdc
Temperature Range: Maximum Ambient – 150°F (66°C)
Mounting: Horizontal or Vertical
Dimensions: Case – 5 5/8 in. high x 2 in. wide x 2 1/8 in. deep (Case – 143 mm high x 51 mm wide x 54 mm deep)
Approvals, Underwriters Laboratories Inc.: UL Component Recognized: File No. MP466, Vol. 6, Sec.1, Guide No. MBPR2
Approvals, CSA: File No. 095329

Dimensions in inches (millimeters)

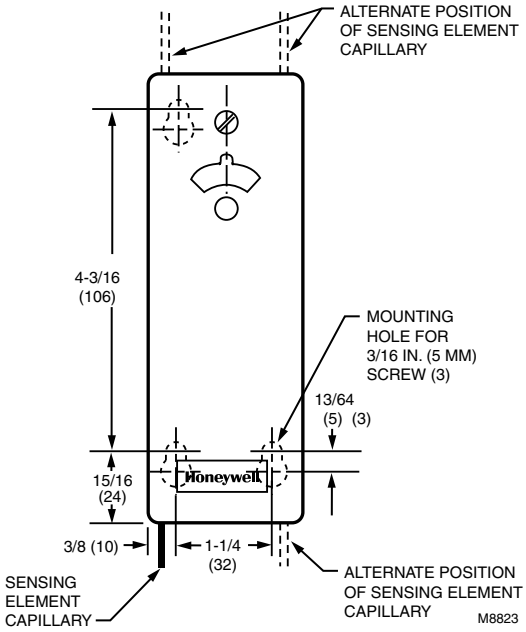

Material Number	Application	Operating Temperature Range	Differential Temperature	Capillary Length	Switching Action	Includes
L4008A1015/U	High or Low limit	100°F to 240°F (38°C to 116°C)	5°F to 30°F adj. (3°C to 17°C adj.)	66 in.	SPST, contacts break on temperature rise.	–
L4008A1130/U	High or Low limit	130°F to 270°F (54°C to 132°C)	5°F to 30°F adj. (3°C to 17°C adj.)	120 in.	SPST, contacts break on temperature rise.	Stop factory-set at 200°F (93°C)
L4008B1013/U	Circulator	100°F to 240°F (38°C to 116°C)	5°F to 30°F adj. (3°C to 17°C adj.)	66 in.	SPST, contacts make on temperature rise.	–
L4008E1156/U	High Limit; Manual Reset	130°F to 270°F (54°C to 132°C)	Manual Reset	66 in.	SPST, contacts break on temperature rise.	Stop factory-set at 250°F (121°C); Heat-conductive compound
L4008E1305/U	High Limit; Manual Reset	100°F to 240°F (38°C to 116°C)	Manual Reset	66 in.	SPST, contacts break on temperature rise.	Stop factory-set at 240°F (116°C)
L4008E1313/U	High Limit; Manual Reset	100°F to 200°F (38°C to 116°C)	Manual Reset	66 in.	SPST, contacts break on temperature rise.	–
L6008A1192/U	Circulator Control and Low Limit	100°F to 240°F (38°C to 116°C)	5°F to 30°F adj. (3°C to 17°C adj.)	66 in.	SPDT	Stop factory-set at 240°F (116°C)
L6008A1242/U	Circulator Control and Low Limit	100°F to 200°F (38°C to 93°C)	5°F to 30°F adj. (3°C to 17°C adj.)	66 in.	SPDT	–

L4103 Combination Aquastat® and High Limit Controller

An immersion-type control the Aquastat® Controller senses water temperature, cycles the burner through the oil primary, or provides water temperature regulation for gas systems. The controller breaks the circuit on a temperature rise past setpoint.

- L4103A,B,C have a sensing element and a high limit sensor with automatic reset.
- Mounts on a horizontal immersion well in water heater wall.
- Adjustable temperature setting scale.
- Fluid-filled element operates SPST, Micro Switch™ snap-acting switch.
- Integral, nonadjustable high limit. L4103C is an immersion controller for gas systems.
- L4103A,B is an immersion controller for oil systems.

Dimensions in inches (millimeters)

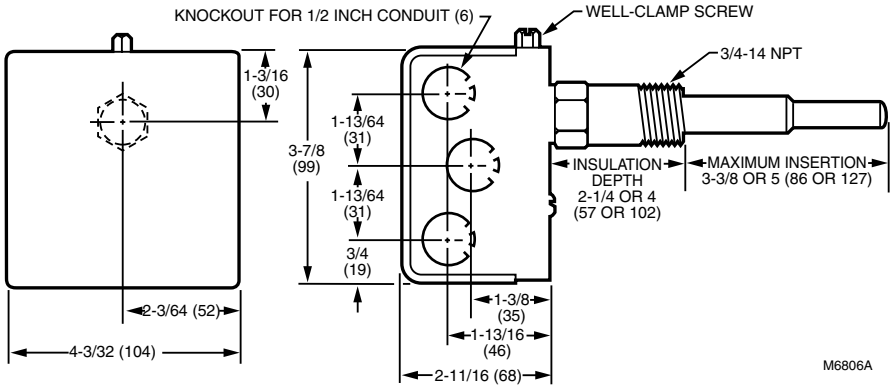

Operating Temperature Range: 100°F to 240°F stop set at 150°F (Scale marked- Hot-Normal-Warm) (38°C to 116°C stop set at 66°C (scale marked- Hot-Normal-Warm))

Electrical Ratings:
At Full Load – 8 A @ 120 Vac: 5 A @ 240 Vac;
At Locked Rotor – 48 A @ 120 Vac: 30 A @ 240 Vac

Approvals, Underwriters Laboratories Inc.: UL Component Recognized: File No. MP466, Guide No. MBPR2.

Material Number	Application	Differential Temperature	Well Spud Size	Insulation Depth	Switching Action	Mounting
L4103A1019/U	High Limit	7°F ± 4°F (3.9°C ±2°C)	3/4 in. NPT (19 mm NPT)	4 in. (102 mm)	SPST, contacts break on temperature rise.	Mounts on a horizontal immersion well in water heater wall.
L4103A1100/U	High Limit	7°F ± 4°F (3.9°C ±2°C)	3/4 in. NPT (19 mm NPT)	2 1/4 in. (57 mm)	SPST, contacts break on temperature rise.	Mounts on a horizontal immersion well in water heater wall.

L8100 Aquastat® Controller

L8100 are immersion type controllers for regulating and limiting the tank temperature in water heater and hydronic systems. As the water temperature rises past the setpoint, the controller switches off the gas valve.

- Regulates temperature and provides energy cutoff (ECO) action on a temperature rise past the setpoint.
- Includes a second sensing element that senses average water temperature to minimize stacking.
- Fluid-filled element operates Micro Switch™ SPST snap-acting switch.
- ECO switch interrupts the thermocouple circuit or main valve before tank reaches 210°F (99°C) maximum temperature.
- Includes factory-installed immersion well on controller.
- Internal adjustment screw.
- Special switch terminal provides three-wire hookup from Aquastat® controller to gas valve.

Dimensions in inches (millimeters)

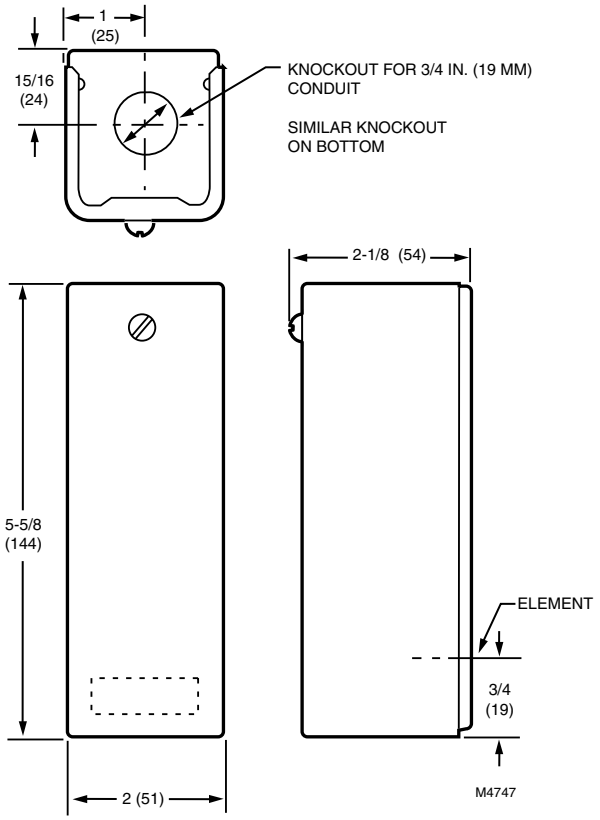

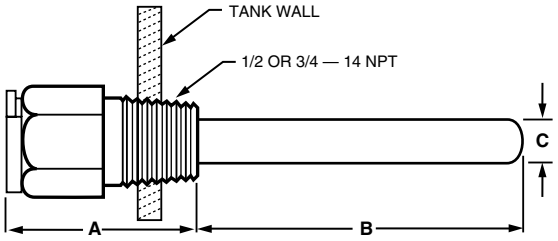

	CONTROLLER WELL		REMOTE WELL	
	IN.	MM	IN.	MM
A INSULATION DEPTH	2-1/4	57	1-1/2 OR 2-1/2	38 OR 64
B INSERTION DEPTH	5	127	3	76
C WELL DIAMETER	7/16	11	7/16	11

M4746

Operating Temperature Range: 100°F to 180°F (38°C to 82°C)
Differential Temperature:
Controller: 5°F (3°C), fixed.
Energy Cutoff Switch: 20°F (11°C), fixed.
Electrical Ratings: Millivolt – 2A maximum at 24 Vac
Mounting: Immersion Well
Temperature Range:
(ECO) Energy Cutoff: 190°F (88°C);
Tank Maximum: 210°F (99°C)
Dimensions: Case – 5 5/8 in. high x 2 in. wide x 2 1/8 in. deep (Case – 143 mm high x 51 mm wide x 54 mm deep)
Approvals, Underwriters Laboratories Inc.: UL Component Recognized: File No. MP466, Guide No. MBPR2
Approvals, CSA: File No. 112491

Material Number	Application	Bulb Size	Capillary Length	Insulation Depth	Switching Action	Includes
L8100B1037/U	High Limit	3/8 in. (10 mm)	42 in.	controller well: 2 1/4 in. (57 mm) remote well: 1 1/2 or 2 1/2 in. (38 mm or 64 mm)	SPST, contacts break on temperature rise.	–
L8100B1094/U	High Limit	3/8 in. (10 mm)	54 in.	controller well: 2 1/4 in. (57 mm) remote well: 1 1/2 or 2 1/2 in. (38 mm or 64 mm)	SPST, contacts break on temperature rise.	Two zinc plated wells and one well clamp for remote well.
L8100B1128/U	High Limit	3/8 in. (10 mm)	39 in.	1 1/2 in. (38 mm)	SPST, contacts break on temperature rise.	–

L4081; L6081 Multiple Aquastat® Controllers

High limit, low limit and/or circulator controllers used to regulate boiler water temperature in gas- or oil-fired hydronic heating systems.

- An immersion type liquid-filled sensing element actuates two snap switches.
- One switch operates as a high limit control.
- The other switch operates as a low limit and/or circulator control, depending on the model.
- Controller may be mounted in any positioning and needs no leveling.
- Separate, easy-to-read, calibrated dial and setpoint adjustments for each switch.
- Differential adjustment on low limit or circulator switch on select models.
- All adjustments accessible inside front cover.
- Push-in terminals for quick connecting.
- Single sensing element for easy installation.
- Two SPST snap switches act independently at respective temperature settings.

Dimensions in inches (millimeters)

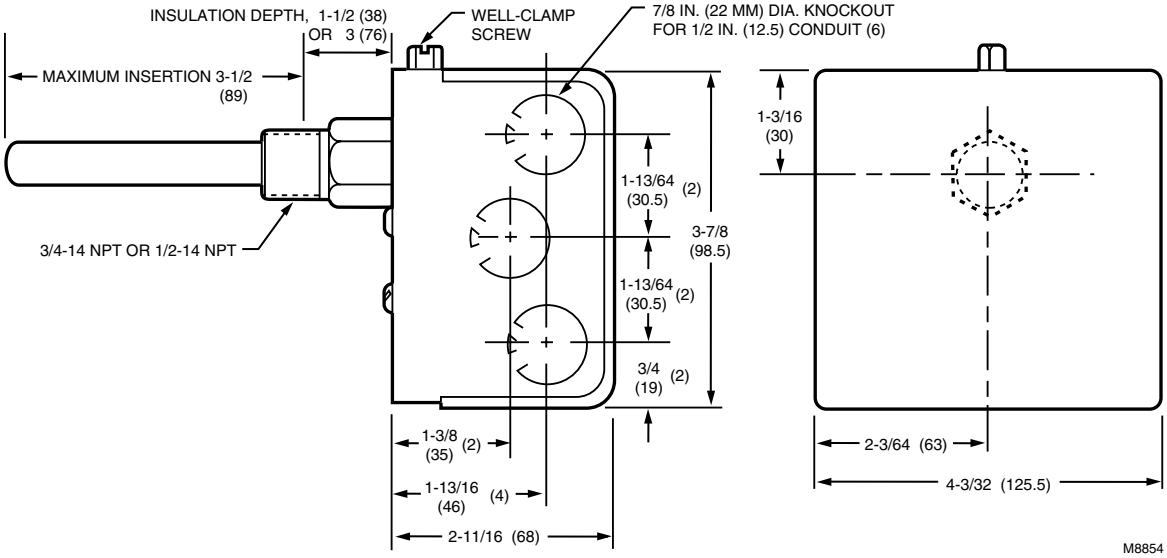

Temperature Range: Maximum – 150°F (66°C) at switches; 265°F (129°C) at sensing element
Operating Temperature Range:
High Limit – 130°F to 240°F (54°C to 116°C);
Low Limit –110°F to 220°F (43°C to 104°C)
Electrical Ratings: 0.25 A @ 0.25 to 12 Vdc;
At Full Load – 8A @ 120 Vac: 5.1A @ 240 Vac;
At Locked Rotor – 48A @ 120 Vac: 30.6A @ 240 Vac

Electrical Ratings, Ignition: Transformer Load: 360 VA
Mounting: Horizontal
Dimensions: 3 7/8 in. high x 4 1/8 in. wide x 2 3/4 in. deep. (98 mm high x 105 mm wide x 70 mm deep.)
Operating Humidity Range (% RH): 0 to 95% RH, non-condensing
Approvals, Underwriters Laboratories Inc.: UL Listed: File No. MP466, Vol. 12, Sec. 4, Guide No. MBPR2
Approvals, CSA: Certified: File No. LR95329-1

Material Number	Application	Differential Temperature	Well Spud Size	Insulation Depth	Switching Action
L4081A1023/U	High and Low limit	High limit : 10°F fixed; low limit: 10-25°F adj.	3/4 in. - 14 NPT (19 mm - 14 NPT)	1 1/2 in. (38 mm)	SPST: High & Low Limit
L4081B1047/U	High Limit and Circulator	High limit : 10°F fixed; low limit: 10-25°F adj.	3/4 in. - 14 NPT (19 mm - 14 NPT)	1 1/2 in. (38 mm)	SPST: High Limit & Circulator
L4081B1096/U	High Limit and Circulator	10°F Fixed	–	3 in. (76 mm)	SPST: High Limit & Circulator
L6081A1036/U	High and Low Limit and Circulator	High limit : 10°F fixed; low limit: 10-25°F adj.	3/4 in. - 14 NPT (19 mm - 14 NPT)	1 1/2 in. to 4 in. (38 mm)	SPST: High Limit SPDT: Low Limit and Circulator

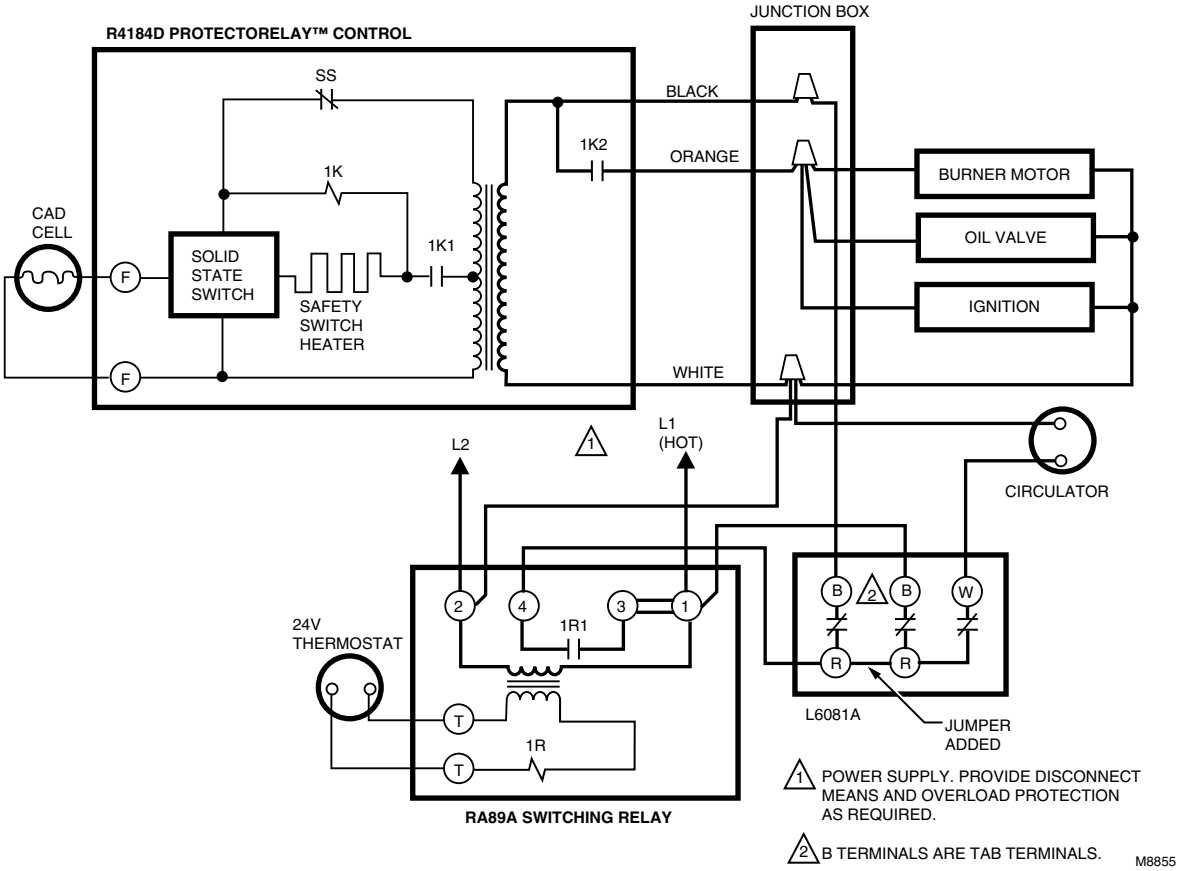
R4184D PROTECTORELAY™ CONTROL
JUNCTION BOX
SS
BLACK
1K2
ORANGE
1K
BURNER MOTOR
CAD CELL
SOLID STATE SWITCH
1K1
OIL VALVE
F
SAFETY SWITCH HEATER
IGNITION
F
WHITE
L2
1
L1 (HOT)
CIRCULATOR
2
4
3
1
B
2
B
W
1R1
24V THERMOSTAT
R
R
T
L6081A
JUMPER ADDED
1R
T
RA89A SWITCHING RELAY
1 POWER SUPPLY. PROVIDE DISCONNECT MEANS AND OVERLOAD PROTECTION AS REQUIRED.
2 B TERMINALS ARE TAB TERMINALS.
M8855

L7224U Oil Electronic Aquastat Controller

Universally compatible and easy to install the L7224U allows for quick diagnostics updates through an easy-to-read LED display enhanced with a system of flashing lights. It's like an express checkout service for every installation. For quality circulator, oil burner and boiler control for today's systems and tomorrow's, the L7224U Aquastat is a state-of-the-art solution. Make the switch from electromechanical to electronic with the universally compatible L7224U.

- Complies with 2012 Department of Energy Standards
- Diagnostic updates through easy-to-read LED displays
- ± 2°F accuracy and faster response times
- Adjustable high- and low-limit differential
- Outdoor reset functionality available with W8735S1000 and W8735Y1000
- Provides multizone control
- Thermowell horizontal or vertical and flush mounting
- EnviraCOM™ communications enabled
- Compatible with W8735S3000 Alarm Module

Voltage: 120 Vac
Power Consumption: 7 VA
Frequency: 60 Hz
Temperature Range: -30°F to 150°F (-34°C to 66°C)
Operating Temperature Range:
High Limit – 130°F to 240°F (54°C to 116°C);
Low Limit – 110°F to 220°F (43°C to 104°C)
Dimensions: 7 1/8 in. high x 4 1/4 in. wide x 2 5/8 in. deep (181 mm high x 109 mm wide x 67 mm deep)
Operating Humidity Range (% RH): 0 to 95% RH, non-condensing
Approvals, Underwriters Laboratories Inc.: Recognized

Accessories:
120650/U – Heat Conductive Grease 1/2 oz.
121371AA/U – Well clamp assembly with clamp capillary 21371 (1) screws 804644 and nuts 60156
123869A/U – Copper. Bulb size: 3/8 in. x 3 in. (10 mm x 76 mm). Well size: 3 in. (76 mm) insertion, 1 1/2 in. (38 mm) insulation, 1/2 in. NPT.
123870A/U – Copper. Bulb size: 3/8 in. x 3 in. (10 mm x 76 mm). Well size: 3 in. (76 mm) insertion, 1 1/2 in. (38 mm) insulation, 3/4 in. NPT.
C7089R1013/U – Senses outdoor temperature and humidity to display on RedLINK™ enabled thermostats and accessories.
C7089U1006/U – Outdoor Sensor used to measure the outdoor temperature for use with VisionPro and VisionPRO IAQ.
W8735ER1000/U – Wireless Outdoor Reset Module for use with L7224/L7248 series 2.
W8735S1000/U – Outdoor Reset Module for use with L7224/L7248 series 2. Includes outdoor sensor.
W8735S1008/U – Domestic Hot Water Module for use with L7224/L7248 series 2. Includes water pipe temperature sensor.
W8735Y1000/U – Outdoor Reset Module for use with L7224/L7248 series 2. Includes outdoor sensor C7089R1013.

Material Number	Application	Differential Temperature	Mounting	Electrical Ratings, Burner	Electrical Ratings, Circulator
L7224U1002/U	Oil Aquastat Controller	High limit : 5-20°F adj.; low limit: 10-25°F adj.	Well mount, horizontal or vertical position, or flush mounted remote from the well.	At Full Load – 7.4 A @ 120 Vac; At Locked Rotor – 44.4 A inrush	At Full Load – 7.4 A @ 120 Vac; At Locked Rotor – 44.4 A inrush

L8124 Triple Aquastat® Relay

Immersion-type controllers that combine high limit protection with low limit and circulator control in forced hydronic heating systems, including domestic hot water service.

- Provide multizone control by using a separate circulator and R845 Relay for each zone.
- Include diaphragm powerhead and Micro Switch™ assembly that respond to temperature changes in boiler water.
- Mount directly to boiler.
- Select models include large transformers and extra terminals for supplying power to low voltage zone valves.
- Require 24 Vac thermostat with heat anticipator set at 0.2 A (plus current draw of gas valve on L8124E).

Differential Temperature: High limit: 10°F fixed; low limit: 10-25°F adj.
Frequency: 60 Hz
Electrical Connections: Quick Connect/Screw
Switching Action: SPST: High Limit
SPDT: Low Limit and Circulator Control
Maximum Safe Operating Pressure (psi): 200 psi on outside of immersion well, 100 psi on capsule if inserted directly.
Maximum Safe Operating Pressure (kPa): 1378 kPa on outside of immersion well, 690 kPa on capsule if inserted directly.
Electrical Ratings, Circulator:
At Full Load – 7.4 A @ 120 Vac: 3.7 A @ 240 Vac;
At Locked Rotor – 44.4 A @ 120 Vac: 22.2 A @ 240 Vac
Electrical Ratings, Burner:
At Full Load – 7.4 A @ 120 Vac: 3.7 A @ 240 Vac;
At Locked Rotor – 44.4 A @ 120 Vac: 22.2 A @ 240 Vac
Operating Humidity Range (% RH): 0 to 95% RH, non-condensing
Operating Temperature Range:
High Limit – 130°F to 240°F (54°C to 116°C) adjustable;
Low Limit – 110°F to 220°F (43°C to 104°C) adjustable
Temperature Range: Maximum Ambient temp case: 150°F (66°C); Maximum Sensing element 265°F (129°C)
Approvals, Underwriters Laboratories Inc.: UL Listed (models with well): File No. MP466, Guide No. MBPR; UL Component Recognized (models without well): File No. MP466, Guide No. MBPR2
Approvals, CSA: File No. 095329

Material Number	Application	Burner Control Voltage	Insulation Depth	Mounting
L8124A1007/U	High Limit Protection, Low Limit and Circulation Control	120 Vac; 60 Hz	1 1/2 in. (38 mm)	Vertical Mount
L8124A1015/U	High Limit Protection, Low Limit and Circulation Control	120 Vac; 60 Hz	3 in. (76 mm)	Vertical Mount
L8124C1003/U	Triple Aquastat Relay with High limit	120 Vac; 60 Hz	1-1/2 in (38 mm)	Horizontal
L8124E1016/U	Triple Aquastat Relay with High limit	120 Vac; 60 Hz	–	Vertical Mount
L8124G1020/U	Triple Aquastat Relay with High limit	120 Vac; 60 Hz	–	Vertical Mount
L8124L1011/U	Triple Aquastat Relay with High limit	120 Vac; 60 Hz	–	Horizontal

Dimensions in inches (millimeters)

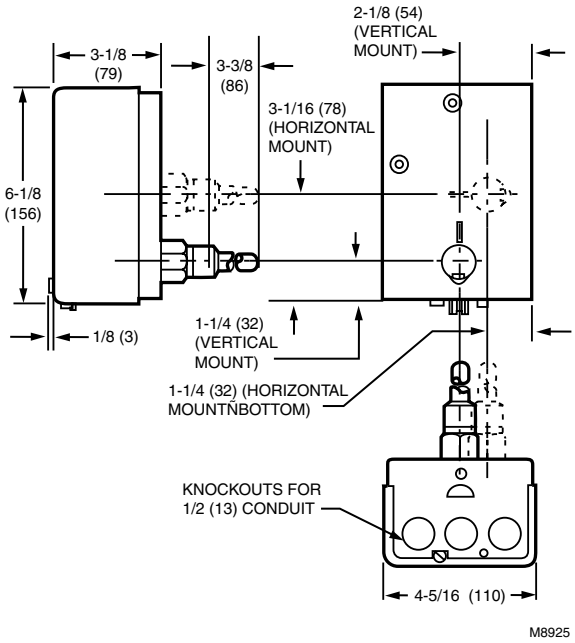

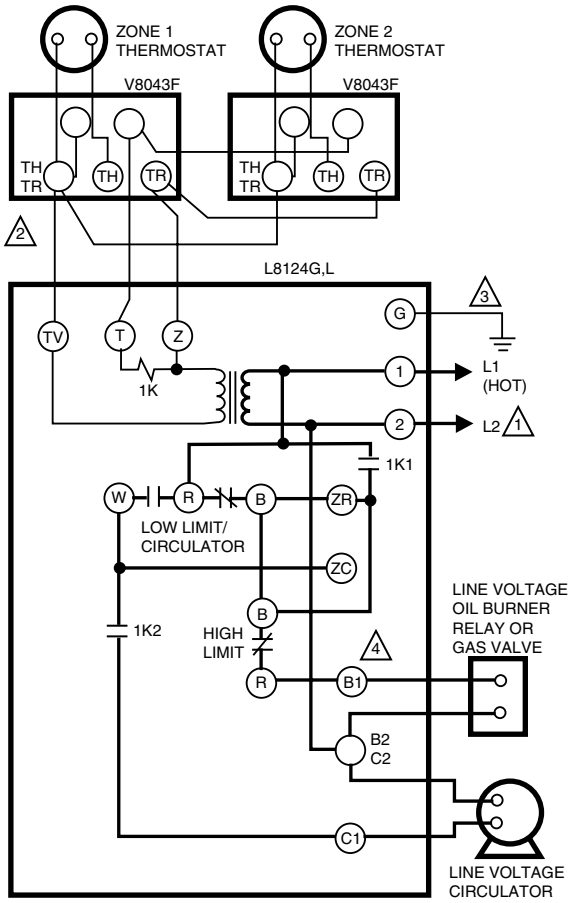

1 POWER SUPPLY. PROVIDE DISCONNECT MEANS AND OVERLOAD PROTECTION AS REQUIRED.

2 UP TO TWO V8043F ZONE VALVES CAN BE POWERED WITH L8124G,L. ADD ADDITIONAL TRANSFORMER FOR EVERY TWO OR LESS VALVES.

3 CONTROL CASE MUST BE CONNECTED TO EARTH GROUND. USE GROUNDING SCREW PROVIDED.

4 B1 IS 1/4 IN. TAB TERMINAL.

M1795B

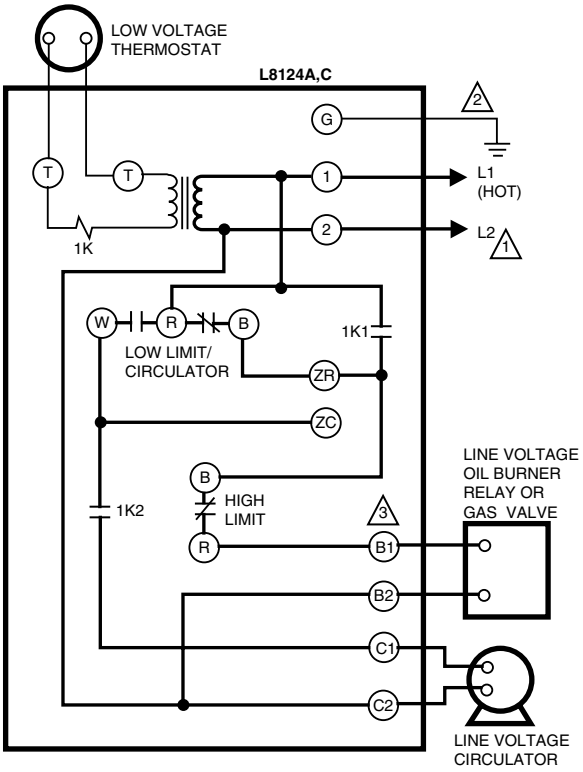

1 POWER SUPPLY. PROVIDE DISCONNECT MEANS AND OVERLOAD PROTECTION AS REQUIRED.

2 CONTROL CASE MUST BE CONNECTED TO EARTH GROUND. USE GROUNDING SCREW PROVIDED.

3 B1 IS 1/4 IN. TAB TERMINAL.

M8802

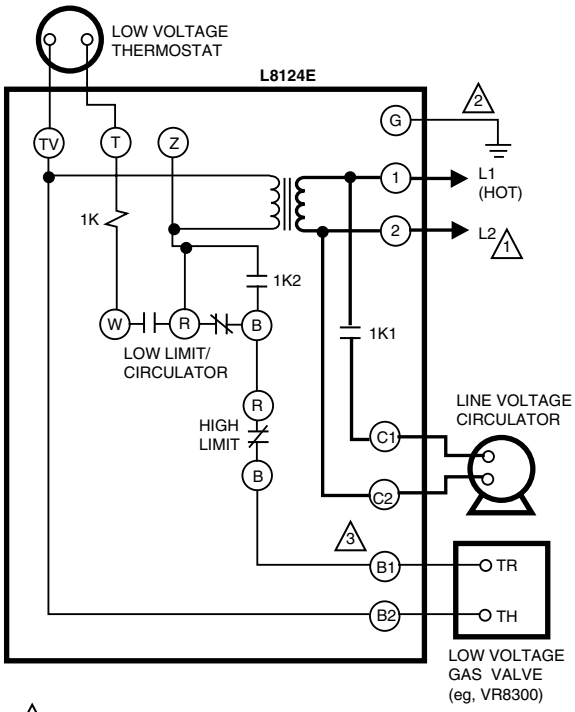

1 POWER SUPPLY. PROVIDE DISCONNECT MEANS AND OVERLOAD PROTECTION AS REQUIRED.

2 CONTROL CASE MUST BE CONNECTED TO EARTH GROUND. USE GROUNDING SCREW PROVIDED.

3 B1 IS 1/4 IN. TAB TERMINAL.

M8803

L8148 Aquastat Relay

Immersion-type controllers that combine high limit protection with switching relay control of burner and circulator motors.

- High limit opens burner circuit only.
- Select models include transformer and accessory terminals for adding a remote low limit controller.
- Case available for horizontal or vertical mounting.
- Requires a 24 Vac thermostat with heat anticipator set at 0.2A.

Application: High Limit
Voltage: 120 Vac
Frequency: 60 Hz
Temperature Range: Maximum – 150°F (66°C) with 1.2 A 24 V load; 77°F (25°C) with 1.4 A 24 V load
Capillary Length: 4 1/2 in. (114 mm)
Electrical Connections: Quick-Connect / Screw
Switching Action: SPST: High Limit & Circulator
Anticipator Setting: 0.2 A
Maximum Safe Operating Pressure (psi): Immersion Well: 255 psi
Maximum Safe Operating Pressure (kPa): Immersion Well: 1757 kPa
Electrical Ratings, Circulator:
At Full Load – 7.4 A @ 120 Vac: 3.7 A @ 240 Vac;
At Locked Rotor – 44.4 A @ 120 Vac: 22.2 A @ 240 Vac
Electrical Rating, Burner:
At Full Load – 7.4 A @ 120 Vac: 3.7 A @ 240 Vac;
At Locked Rotor – 44.4 A @ 120 Vac: 22.2 A @ 240 Vac
Low Voltage – 0.8 A maximum @ 24 Vac
Millivoltage – 0.25 A @ 1/4 to 12 Vdc
Operating Humidity Range (% RH): 0 to 95% RH, non-condensing
Approvals, Underwriters Laboratories Inc.: UL Listed: File No. MP466, Vol. 13, Sec. 2, Guide No. MBPR2.
Approvals, CSA: L8148A, E - File No. 095329
L8148 J - File No. LR1620, Guide No. 400-E-O

Material Number	Insulation Depth	Operating Temperature Range	Differential Temperature	Mounting	Includes
L8148A1017/U	1 1/2" to 3" Insulation	High Limit – 140°F (60°C) to 240°F (116°C)	8°F fixed	Horizontal	Heat Conductive Compound
L8148E1265/U	1 1/2" to 3" Insulation	High Limit – 180°F (82°C) to 240°F (116°C)	15°F fixed	Vertical Mount	Molex® plug for use with vent damper, includes heat-conductive compound.
L8148E1299/U	1 1/2" to 3" Insulation	High Limit – 180°F (82°C) to 240°F (116°C)	15°F fixed	Vertical Mount	50 VA transformer and heat conductive compound. Molex® plug for use with vent damper
L8148J1009/U	1 1/2" to 3" Insulation	High Limit – 120°F (54°C) to 240°F (116°C)	8°F fixed	Horizontal or Vertical	Heat Conductive Compound

Dimensions in inches (millimeters)

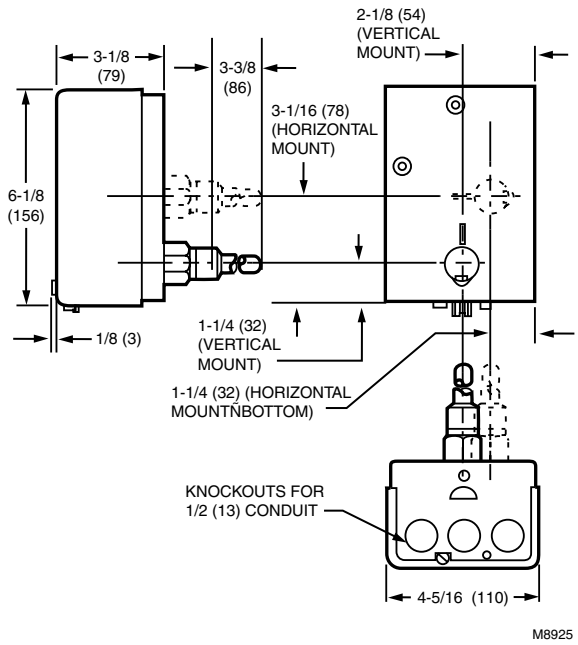

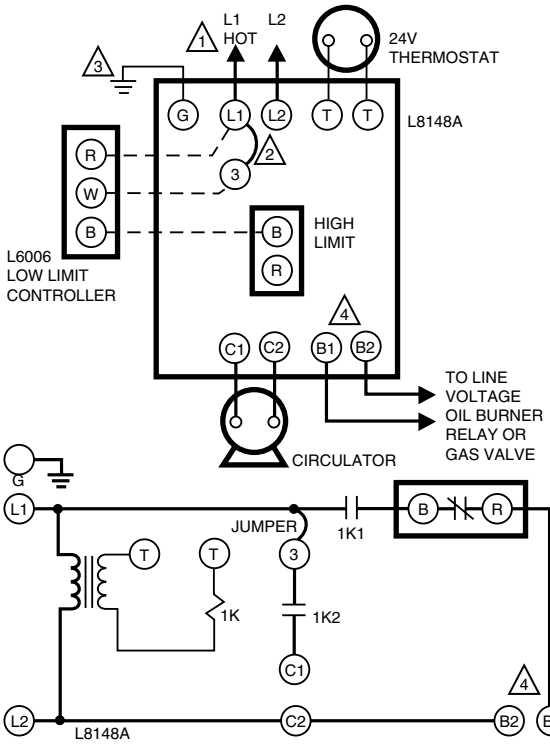

1. POWER SUPPLY. PROVIDE DISCONNECT MEANS AND OVERLOAD PROTECTION AS REQUIRED.
2. REMOVE JUMPER WHEN ADDING L6006 LOW LIMIT CONTROLLER.
3. CONTROL CASE MUST BE CONNECTED TO EARTH GROUND. USE GROUNDING SCREW PROVIDED.
4. B1 IS 1/4 IN. TAB TERMINAL.

M2842A

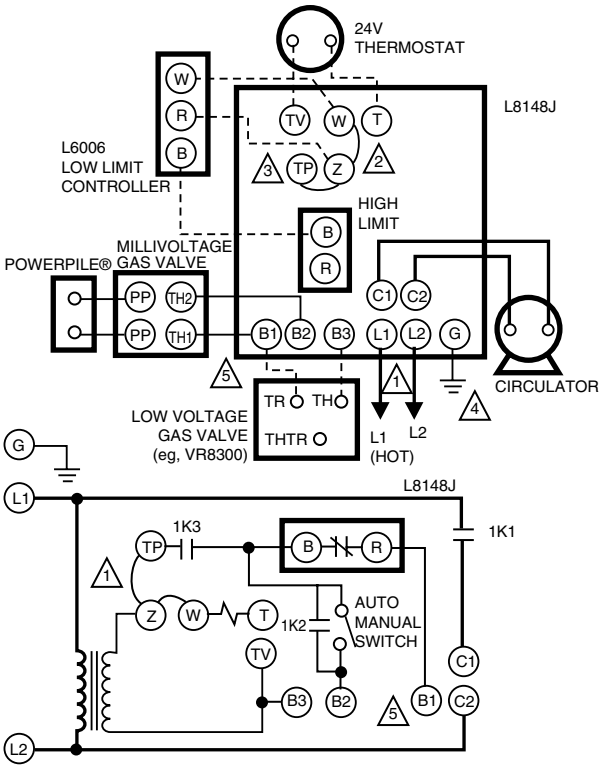

1. POWER SUPPLY. PROVIDE DISCONNECT MEANS AND OVERLOAD PROTECTION AS REQUIRED.
2. REMOVE Z-W JUMPER IF SERIES 60 LOW LIMIT IS USED. WIRE LOW LIMIT CONTROLLER OR ZONE VALVES AS SHOWN. USE WITH 24V (B1-B3) CIRCUIT ONLY.
3. FOR 24V BURNER, WIRE B1-B3 AND USE JUMPER Z-W AND TP-Z. FOR POWERPILE® (MILLIVOLTAGE) GAS VALVES, REMOVE JUMPER TP-Z AND WIRE BURNER B1-B2. JUMPER Z-W REMAINS IN POSITION.
4. CONTROL CASE MUST BE CONNECTED TO EARTH GROUND. USE GROUNDING SCREW PROVIDED.
5. B1 IS 1/4 IN. TAB TERMINAL.

M1793B

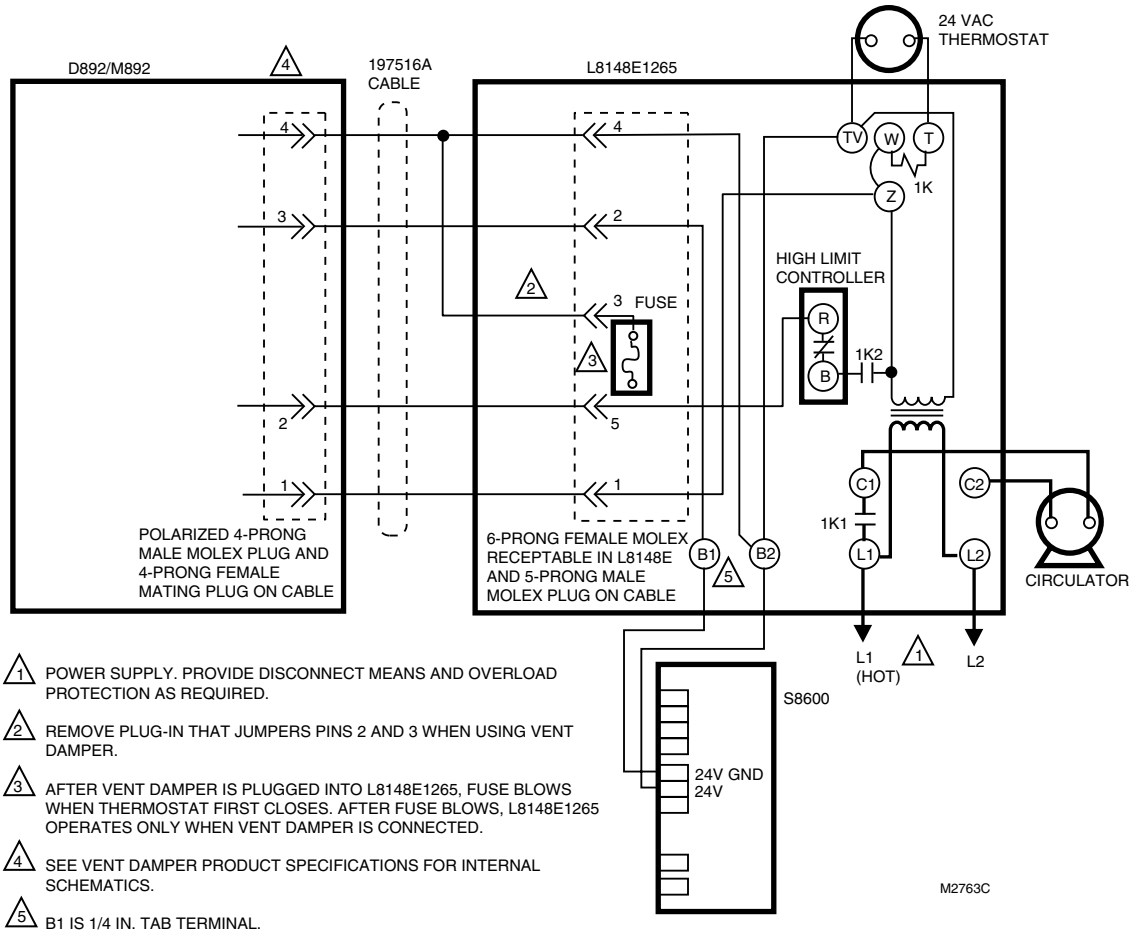

1. POWER SUPPLY. PROVIDE DISCONNECT MEANS AND OVERLOAD PROTECTION AS REQUIRED.
2. REMOVE PLUG-IN THAT JUMPERS PINS 2 AND 3 WHEN USING VENT DAMPER.
3. AFTER VENT DAMPER IS PLUGGED INTO L8148E1265, FUSE BLOWS WHEN THERMOSTAT FIRST CLOSES. AFTER FUSE BLOWS, L8148E1265 OPERATES ONLY WHEN VENT DAMPER IS CONNECTED.
4. SEE VENT DAMPER PRODUCT SPECIFICATIONS FOR INTERNAL SCHEMATICS.
5. B1 IS 1/4 IN. TAB TERMINAL.

Outdoor Reset and Domestic Hot Water Priority

Outdoor reset saves energy by optimizing a boiler's settings based on the actual outdoor temperature. We offer wired and wireless AquaReset® Outdoor Reset solutions. While both versions offer the same incredible energy savings, the Wireless AquaReset® solution installs in only 30 minutes thanks to RedLINK® wireless communication. Compatible with Outdoor Reset-Ready L7224/L7248 Aquastat®s, S93 Integrated Boiler Controls, and R7910 SOLA Controls.

Domestic Hot Water Priority Kits are used with AquaReset® and available for applications when domestic hot water priority override is needed.

Voltage: 24 Vac
Frequency: 60 Hz
Temperature Range: -30°F to 150°F (-34°C to 66°C)
Mounting: Wall Mounted in any orientation
Operating Temperature Range: -30°F to 150°F (-9°C to 66°C)
Electrical Ratings: 24 Vac, 60 Hz
Operating Humidity Range (% RH): 0 to 95% RH Non-Condensing

Accessories:
C7089R1013/U – Wireless outdoor sensor
C7089U1006/U – Wired outdoor sensor for use in W8735S1000/U

Material Number	Description	Application	Dimensions	Used With	Includes
W8735ER1000/U	Wireless Outdoor Reset Module for use with L7224/L7248 series 2.	Wireless Outdoor Reset Module	5.56 in. high x 4.56 in. wide x 1.25 in deep	L7224; L7248; S9360, S9361, S9380; R7910	–
W8735S1000/U	Outdoor Reset Module for use with L7224/L7248 series 2. Includes outdoor sensor	Wireless Outdoor Reset Module	2.410 in. high x 3.385 in. wide x .920 in deep	L7224; L7248; S9360, S9361, S9380; R7910	C7089U1006 Outdoor Sensor; Outdoor Reset Module
W8735S1008/U	Domestic Hot Water Module for use with L7224/L7248 series 2. Includes water pipe temperature sensor	Domestic Hot Water Priority Kit	2.410 in. high x 3.385 in. wide x .920 in deep	L7224; L7248	–
W8735Y1000/U	Outdoor Reset Module for use with L7224/L7248 series 2. Includes outdoor sensor C7089R1013	Wireless Outdoor Reset Kit	5.56 in. high x 4.56 in. wide x 1.25 in deep	L7224; L7248; S9360, S9361, S9380; R7910	C7089R1013

R8182 Combination Protectorelay® and Hydronic Heating Controllers

Immersion type Aquastat controller and oil burner primary control provides high limit and low limit/circulator control for oil-fired hydronic heating systems.

- Use in intermittent ignition applications.
- Capable of zone control with zone valves.
- Circulator zone control with ZC and ZR terminals on R8182D,E,H,J.
- Flame failure during the running cycle results in a 45 second attempt to restart.
- If unsuccessful, safety shutoff occurs, requiring manual reset before burner can be restarted.
- R8182D,E,F mount directly on burner; R8182H,J mount on 4 x 4 in. junction box and include 5 ft (1.5 m) armored capillary with remote sensor.
- C554A Cadmium Sulfide Flame Detector and a 24 Vac thermostat required.
- Auxiliary ZC and ZR terminals may be used to provide circulator zone control through an R845A Switching Relay.

Voltage: 120 Vac
Power Consumption: 9 W
Frequency: 60 Hz
Temperature Range: Maximum – 250°F (121°C) at element
Operating Temperature Range:
High Limit – 130°F to 240°F (54°C to 116°C);
Low Limit – 110°F to 220°F (43°C to 104°C)
Anticipator Setting: 0.2 A
Maximum Safe Operating Pressure (psi): 200 psi on immersion well; 100 psi direct immersion.
Maximum Safe Operating Pressure (kPa): 1378 kPa on immersion well; 90 kPa direct immersion.

Electrical Ratings, Ignition: 360 VA
Electrical Ratings, Burner:
At Full Load – 4.4 A @ 120 Vac;
At Locked Rotor – 26.4 A @ 120 Vac
Timing: Safety Switch – 45 sec
Dimensions: 7 1/8 in. high x 5 1/4 in. wide x 3 7/16 in. deep. (181 mm high x 133 mm wide x 87 mm deep.)
Operating Humidity Range (% RH): 0 to 95% RH, non-condensing
Approvals, Underwriters Laboratories Inc.: UL Listed: File No. listed: MP268, Vol. 3,4 (R8182D,E,F), Vol. 37 (R8182H,J), Sec. 1.
Approvals, CSA: File No. 095329

Material Number	Differential Temperature	Mounting	Insulation Depth	Includes
R8182D1079/U	High limit: 10°F fixed; Low limit/circulator: 10°F to 25°F adj.	Vertical Mount	1 1/2 in. (38 mm)	Stop dial; Heat Conductive Compound
R8182D1111/U	High limit: 10°F fixed; Low limit/circulator: 10°F to 25°F adj.	Horizontal	1 1/2 in. (38 mm)	Stop dial; Heat Conductive Compound
R8182H1070/U	High limit: 10°F fixed; Low limit/circulator: 10°F to 25°F adj.	Junction box mount	1 1/2 in. (38 mm)	Stop dial; Heat Conductive Compound

Dimensions in inches (millimeters)

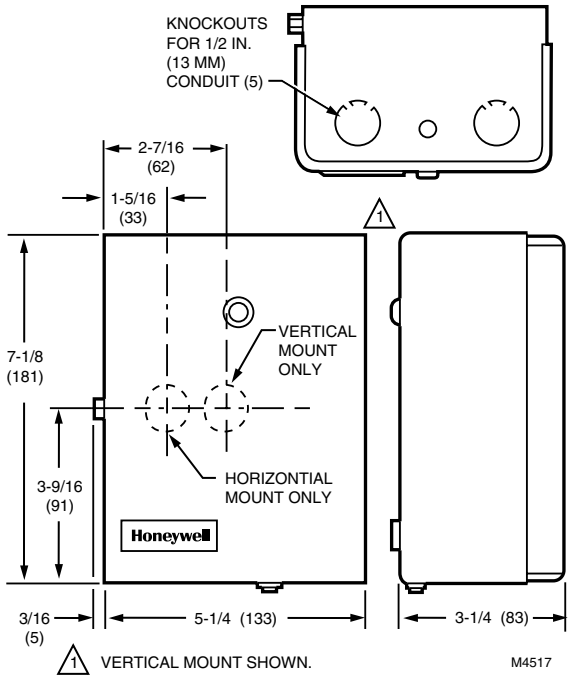

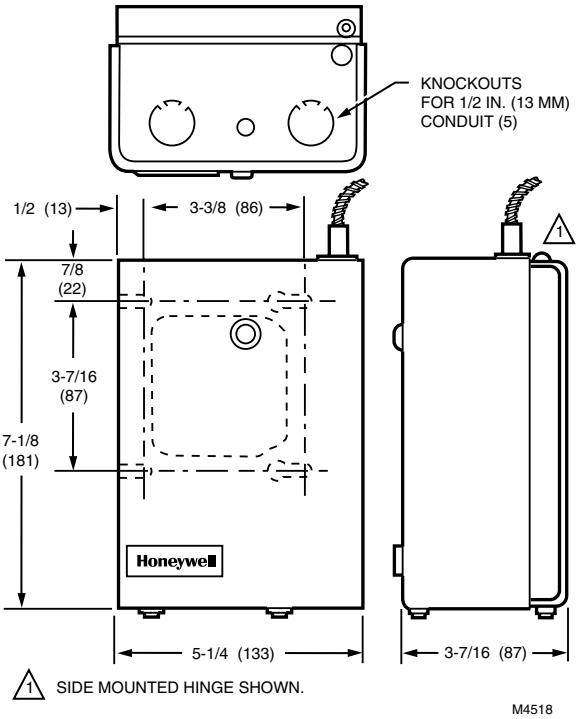

Well Assemblies

Material Number	Materials	Capillary Diameter	Insertion Length	Shell (internal diameter)	Well Spud Size	Insulation Depth	Description	Includes	Used With	
121371A/U	Copper	5/64 in.	3 in.	3/8 in.	1/2 in. - 14 NPT (13 mm - 14 NPT)	1 1/2 in.	Copper. Bulb size: 3/8 in. x 3 in. (10 mm x 76 mm). Well size: 3 in. (76 mm) insertion, 1 1/2 in. NPT. Includes mounting clamp.	Mounting Clamp	–	
121371B/U	Copper	5/64 in.	3 in.	3/8 in.	3/4 in. - 14 NPT (19 mm - 14 NPT)	1 1/2 in.	Copper. Bulb size: 3/8 in. x 3 in. (10 mm x 76 mm). Well size: 3 in. (76 mm) insertion, 1 1/2 in. (38 mm) insulation, 3/4 in. NPT. Includes mounting clamp.	Mounting Clamp	–	
121371L/U	Copper	5/64 in.	3 in.	3/8 in.	1/2 in. - 14 NPT (13 mm - 14 NPT)	3 in.	Copper. Bulb size: 3/8 in. x 3 in. (10 mm x 76 mm). Well size: 3 in. (76 mm) insertion, 3 in. (76 mm) insulation, 1/2 in. NPT. Includes mounting clamp.	Mounting Clamp	–	
121371M/U	Copper	5/64 in.	3 in.	3/8 in.	3/4 in. - 14 NPT (19 mm - 14 NPT)	3 in.	Copper. Bulb size: 3/8 in. x 3 in. (10 mm x 76 mm). Well size: 3 in. (76 mm) insertion, 1 1/2 in. (38 mm) insulation, 3/4 in. NPT. Includes mounting clamp.	Mounting Clamp	–	
123869A/U	Copper	–	3 in.	3/8 in.	1/2 in. - 14 NPT (13 mm - 14 NPT)	1 1/2 in.	Copper. Bulb size: 3/8 in. x 3 in. (10 mm x 76 mm). Well size: 3 in. (76 mm) insertion, 1 1/2 in. (38 mm) insulation, 1/2 in. NPT.	–	–	
123870A/U	Copper	–	3 in.	3/8 in.	3/4 in. - 14 NPT (19 mm - 14 NPT)	1 1/2 in.	Copper. Bulb size: 3/8 in. x 3 in. (10 mm x 76 mm). Well size: 3 in. (76 mm) insertion, 1 1/2 in. (38 mm) insulation, 3/4 in. NPT.	–	L4006; L4081	
123871A/U	Copper	–	3 in.	3/8 in.	3/4 in. - 14 NPT (19 mm - 14 NPT)	3 in.	Copper. Bulb size: 3/8 in. x 3 in. (10 mm x 76 mm). Well size: 3 in. (76 mm) insertion, 3 in. (76 mm) insulation, 3/4 in. NPT.	–	–	
123872A/U	Copper	–	3 in.	3/8 in.	1/2 in. NPT	3 in.	Copper. Bulb size: 3/8 in. x 3 in. (10 mm x 76 mm). Well size: 3 in. (76 mm) insertion, 3 in. (76 mm) insulation, 1/2 in. NPT	–	–	

Single and Multi-function Aquastat Replacement Parts

Material Number	Description	Used With	
120650/U	Heat Conductive Grease 1/2 oz.	Well Assembly	
198799Z/U	Outdoor or Supply sensor with 42 in. lead for AQ475, AQ675 or AQ775	–	
121371AA/U	Well clamp assembly with clamp capillary 21371 (1) screws 804644 and nuts 60156	–	

Integrated Furnace Controls

Universal integrated furnace control replaces multiple single stage field installed hot surface ignition IFC supplied by White Rodgers and UTEC. Uses 120 VAC igniter. Includes instructions special wire harnesses for easy replacement.

- Cross reference and wire harnesses provided for simple replacement over 195 existing furnace controls.
- Main burner ignition using a 120V hot surface igniter.
- Flame rectification circuit to monitor flame presence.
- Monitoring of system pressure switch, high temperature limit, and rollout functions.
- Appliance operation/safety requirements controlled via microprocessor.
- Controls circulating fan motor based on appliance requirements, in response to a conventional low voltage thermostat.
- LED system status, performance and diagnostic indication.
- Twinning capability

Application: Single stage warm air furnaces
Line Voltage: 120 Vac (97-132 Vac)
Low Voltage: 24V (18-30 Vac)
Frequency: 60 Hz
Operating Humidity Range (% RH): 0% to 95% non-condensing
Igniter Current: 5 A resistive @ 120VAC
Thermostat Anticipator Setting: (Stage 1 only) 100mA
PrePurge: 30 seconds
HSI Warmup Time: 17/27 or 30/30 seconds
Trial For Ignition: 4, 6, or 8 seconds
PostPurge: 15 seconds
Interpurge: 60 seconds
Ignition Trials: Three, two tries if flame is not sensed
Number of LEDs: 3

Heat On Fan Delay: 30 or 60 seconds
Heat Off Fan Delay: 60, 90, 120, or 180 Seconds
Cool Fan On Delay: 5 seconds
Cool Fan Off Delay: 0 or 60 seconds
Gas Control Used With: Any 24Vac redundant, direct ignition gas control rated at 1.5A or less. Honeywell VR8205 recommended.
Cooling Contactor Used With: Any 24Vac contactor rated at 1.0A or less
Induced Draft Blower Load: 2.2FLA / 25LRA max @120Vac
Circulator Load: 14.5FLA / 25LRA max @120Vac
Type of Fan Used With: Standard Induction-Type Circulating Fan
Operating Temperature Range: -40°C to +79°C (-40°F to +175°F)
Flame Failure Response Time (sec): 2 Seconds max @ 1µA

Material Number	Description
S9200U1000/U	Universal single stage heating & cooling

Aquatrol® Hydronic Controls

Simple. Powerful. Energy Efficient. Honeywell Aquatrol Hydronic Controls are designed to keep even the most complex systems simple.

All Aquatrol Control Panels Are Loaded With Standard Features:

- Control Pumps or Zone Valves
- Zone Synchronization
- Domestic Hot Water Priority and Priority Override
- Boiler Post Purge
- Boiler Short Cycling Protection
- Freeze Protection
- Pump/Valve Exercise
- Auto Test
- Auto Purge
- Compatible with any digital thermostat
- Intuitive color-coded wiring terminals

AQ250 Relay Control Panels

- Includes all features listed above

Material Number	Application
AQ25042B/U	For use with pumps or zone valves without end switches
AQ25044B/U	For use with zone valves with end switches

AQ25A Relay "Plus" Control Panels

Everything the AQ250 has plus…

- LCD screen, customizable control settings, ability to display outdoor temperature on thermostats, programmable auxiliary relays to add system versatility and more

Material Number	Application
AQ25A42B/U	For use with pumps or zone valves without end switches
AQ25A44B/U	For use with zone valves with end switches

Dedicated AQ1000TN2 and AQ1000TP2 Communicating Thermostats

- Indoor and outdoor temperature can be displayed
- 2-wire "polarity insensitive"
- Displays Fahrenheit or Celsius
- Zone settings for all thermostats can be programmed at the main control panel
- Programmable model controls 1 zone of cooling

AQ251 Reset Control Panels

Everything the AQ25A has plus…

- Outdoor Reset or Load Reset, 0-10 Vdc output to run modulating boilers, support for 1 A/C compressor and up to 64 zones of cooling

Material Number	Application
AQ25110B/U	1 Zone Reset
AQ25142B/U	For use with pumps or zone valves without end switches
AQ25144B/U	For use with zone valves with end switches

AQ252 Mixing Injection Control Panels

Everything the AQ251 has plus…

- The ability to control 2 temperatures with injection pump or mixing valve

Material Number	Application
AQ25242B/U	For use with pumps or zone valves without end switches
AQ25244B/U	For use with zone valves with end switches

Expansion Zoning Panels

For additional zones of pumps or valves, to extend the capacity of systems up to a maximum of 64 heating zones.

Material Number	Application	Number of Zones
AQ25542B/U	Expansion panel for pumps or 2 wire zone valves (line voltage)	4
AQ25582B/U	Expansion panel for pumps or 2 wire zone valves (line voltage)	8
AQ25742B/U	Expansion panel for 2 wire zone valves (24 Vac)	4
AQ25744B/U	Expansion panel for 4 wire zone valves (24 Vac)	4
AQ25400B/U	Add a temperature or expand the AQ network capacity for 16 more zones	—

AQ250 Electronic Relay Boiler Control Panel for Hydronic Zoning System

Honeywell AQ250 AQUATROL boiler controls for single temperature, residential hydronic heating systems ensure ample supply of hot water for space heating and domestic uses. Convert single zone heating systems or upgrade relay-logic zoning systems.

- Use with AQ1000 two-wire communicating thermostats, or most dry contact digital thermostats
- Offers zoning control for up to four zones and controls up to two stages of heat from a single thermostat
- Can expand up to 16 zones with AQ255 or AQ257 or up to 64 zones with AQ254 Add-A-Temp panels
- Line or low-voltage output for zoning equipment, including pumps or valves
- Features zone synchronization through the zone or Greatest Demand control
- Includes domestic hot water priority, priority override protection and boiler short cycling protection
- Automated test feature for quick start-up and simplified troublshooting

Application: Boiler control for zoned hydronic systems
Thermostat Compatibility: AQ1000 Series 2-wire communicating thermostats and most digital thermostats
User Interface: DIP Switches
Boiler Heat Post Purge: 30 seconds (sent to DHW tank or Zone of Greatest Demand - selectable)
Pump/Valve Exercise: 30 seconds per 2 weeks of space heating inactivity
R-C Output (on Transformer): 38 VA, 24 Vac Class II
R-C Input (on Control and Zoning Modules): 24 Vac Class II
Demand Input: Heat Demand (Thermostat R-W) and DHW Demand – External dry contacts connection only
B-B Communication Bus Terminals: Low voltage, Class II, 2-wire polarity-insensitive, digital communicating link to other Control or Zoning modules.
Zone Module Thermostat Input: Low voltage, Class II, 2-wire polarity-insensitive, digital communicating with power link to AQ1000 series thermostat.
ZR-ZC Contact Rating: 120 to 240 Vac, 1/3 HP

Output Ratings: Boiler (T-T) – 24 Vac, 0.5A, 12VA; Boiler Pump – 120 Vac/250 Vac 5A, 1/3HP; DHW Pump/Valve – 120 Vac/250 Vac 5A, 1/3HP; Auxiliary Pump – Dry contact output, 120 Vac/250 Vac 5A, 1/3 HP
Electrical Connections: Wire-clamp screw terminals, Maximum 2 x 14 AWG each on line voltage terminals
Operating Humidity Range (% RH): 5 to 90% RH, non-condensing
Sensor: Supply/Return Sensor – 10 kilohm NTC thermistor at 25°C (77°F) ±0.5°F (±0.3°C) up to 500 ft (150 M) using 18 AWG or larger wire, Lead Length: 10 ft. (3050 mm); Outdoor Sensor – 10 kilohm NTC thermistor at 25°C (77°F) ± 0.5°F (±0.3°C) up to 500 ft (150 M) using 18 AWG or larger wire, beta=3892, Lead Length: 10 ft. (3050 mm)
Approvals, CSA: CSA C/US Certified to CSA and UL Standards, File No. LR76030
Approximate, Dimensions: 13 in. wide x 8 in. high x 3 3/8 in. deep (33 cm wide x 20.3 cm high x 8.5 cm deep)
Weight: 4.9 lbs (2.3 kg)
Temperature Ratings: Panel – 32°F to 130°F; Sensor – -58°F to +230°F (Panel – 0°C to 55°C; Sensor – -50°C to +110°C)
Supply Voltage: 120V 60 Hz

Material Number	Zoning Devices Controlled	Number of Zones	Zone Output Contact Rating	Replacement Parts
AQ25042B/U	Zone pumps or 2-wire valves (line voltage)	4	Pumps: 120 Vac/250 Vac, 5A, 1/3 HP, Valves: 24 Vac, 0.5 A, 12 VA	AQ10X38 24 Vac 38 VA transformer, AQ15540B 4-zone pump expansion module, AQ12C11 supply/return/mixed loop sensor, AQ15000B boiler control module
AQ25044B/U	Zone valves with end switches	4	Pumps: 120 Vac/250 Vac, 5A, 1/3 HP, Valves: 24 Vac, 0.5 A, 12 VA	AQ10X38 24 Vac 38 VA transformer, AQ12C11 supply/return/mixed loop sensor, AQ15000B boiler control module, AQ15740B 4-zone valve with end switch expansion module

AQ25A Programmable Relay Control Panel for Hydronic Zoning System

Honeywell AQ250 AQUATROL boiler controls for single temperature, residential hydronic heating systems ensure ample supply of hot water for space heating and domestic uses. Convert single zone heating systems or upgrade relay-logic zoning systems.

- Displays outdoor temperature on all AQ1000 Series thermostats when used with an AQ12C10 outdoor sensor
- Intuitive and accessible programming interface and central program of zone set points and setback programming
- Customizable control settings and schedules provide greater control and comfort and control up to two stages of heat from a single thermostat
- Zoning Control for up to four zones or expanded to up to 64 zones with additional panels
- Domestic hot water priority and priority override protection
- Boiler short cycling protection, boiler post purge and boiler shock prevention from cold water returning to boiler
- Non-volatile EPROM memory retains program settings during power outage

Application: Boiler control for zoned hydronic systems
Thermostat Compatibility: AQ1000 Series 2-wire communicating thermostats and most digital thermostats
Setback Program: 7 day, up to 2 setback periods/day.
User Interface: LCD Display and a 7 button Key Pad, DIP Switches on zoning modules
Boiler Control Temperature: Differential – 2°F to 41°F or Auto (minimum 2 minutes on time) (Differential – 1°C to 23°C or Auto (minimum 2 minutes on time))
Boiler Heat Post Purge: Off, 10 seconds to 30 minutes (factory default is 30 seconds)
Pump/Valve Exercise: 30 seconds per 2 weeks of space heating inactivity
R-C Output (on Transformer): 38 VA, 24 Vac Class II
R-C Input (on Control and Zoning Modules): 24 Vac Class II (input on Control and Zoning Modules)
Demand Input: Heat Demand (Thermostat R-W), Auxiliary Demand, and DHW Demand – External dry contacts connection only
B-B Communication Bus Terminals: Low voltage, Class II, 2-wire polarity-insensitive, digital communicating link to other Control or Zoning modules.
Zone Module Thermostat Input: Low voltage, Class II, 2-wire polarity-insensitive, digital communicating with power link to AQ1000 series thermostat.

Output Ratings: Boiler (T-T) – 24 Vac, 0.5A, 12VA; Auxiliary Low Voltage – 24 Vac, 0.5A, 12VA; Boiler Pump – 120 Vac/250 Vac 5A, 1/3HP; DHW Pump/Valve – 120 Vac/250 Vac 5A, 1/3HP; Auxiliary Pump – Dry contact output, 120 Vac/250 Vac 5A, 1/3 HP
Electrical Connections: Wire-clamp screw terminals, Maximum 2 x 14 AWG each on line voltage terminals
Operating Humidity Range (% RH): 5 to 90% RH, non-condensing
Sensor: Supply/Return Sensor – 10 kilohm NTC thermistor at 25°C (77°F) ±0.5°F (±0.3°C) up to 500 ft (150 M) using 18 AWG or larger wire, Lead Length: 10 ft. (3050 mm); Outdoor Sensor – 10 kilohm NTC thermistor at 25°C (77°F) ± 0.5°F (±0.3°C) up to 500 ft (150 M) using 18 AWG or larger wire, beta=3892, Lead Length: 10 ft. (3050 mm)
Approvals, CSA: CSA C/US Certified to CSA and UL Standards, File No. LR76030
Approximate, Dimensions: 16 1/2 in. wide x 8 in. high x 3 3/8 in. deep (42 cm wide x 20.3 cm high x 8.5 cm deep)
Weight: 5.7 lbs (2.6 kg)
Temperature Ratings: Panel – 32°F to 130°F; Sensor – -58°F to +230°F (Panel – 0°C to 55°C; Sensor – -50°C to +110°C)
Supply Voltage: 120V 60 Hz

Material Number	Zoning Devices Controlled	Number of Zones	Zone Output Contact Rating	Replacement Parts
AQ25A42B/U	Zone pumps or 2-wire valves (line voltage)	4	Pumps: 120 Vac/250 Vac, 5A, 1/3 HP, Valves: 24 Vac, 0.5 A, 12 VA	AQ10X38 24 Vac 38 VA transformer, AQ15540B 4-zone pump expansion module, AQ12C11 supply/return/mixed loop sensor, AQ12C10 outdoor sensor, AQ15A00B boiler control module
AQ25A44B/U	Zone valves with end switches	4	Pumps: 120 Vac/250 Vac, 5A, 1/3 HP, Valves: 24 Vac, 0.5 A, 12 VA	AQ10X38 24 Vac 38 VA transformer, AQ12C11 supply/return/mixed loop sensor, AQ15740B 4-zone valve with end switch expansion module, AQ12C10 outdoor sensor, AQ15A00B boiler control module

AQ251 Electronic Boiler Reset Control Panel for Hydronic Zoning System

Honeywell AQ251 AQUATROL boiler reset controls for single temperature, residential hydronic heating systems, provide energy-efficient outdoor-temperature compensated control to convert single zone heating system or upgrade relay-logic zoning systems.

- 0 to 10 Vdc modulating output for driving a modulating/condensing boiler
- Displays outdoor temperature on all AQ1000 thermostats when used with the included AQ12C10 outdoor sensor
- Customizable control settings allow for greater control and comfort
- Intuitive and accessible programming interface and central program of zone set points and setback
- Zoning control for up to four zones and can be up to 64 zones using expansion panels
- Boiler short cycling protection, boiler post purge and boiler shock prevent from cold water returning to boiler
- Domestic hot water priority and priority override protection, as well as an automated test and purge feature
- Test and purge feature for quick start-up and simplified troubleshooting

Application: Boiler reset control for hydronic zoning system
Thermostat Compatibility: AQ1000 Series 2-wire communicating thermostats and most digital thermostats
Setback Program: 7 day, up to 2 setback periods/day.
User Interface: LCD Display and a 7 button Key Pad
Boiler Control Temperature: Supply – Max: OFF, 120°F to 225°F; Min: OFF, 59°F to 180°F; Differential – 2°F to 41°F or Auto (minimum 2 minutes on time) (Supply – Max: OFF, 49°C to 107°C; Min: OFF, 15°C to 82°C; Differential – 1°C to 23°C or Auto [minimum 2 minutes on time])
Boiler Design Temperature: 80°F to 210°F (26°C to 99°C)
Outdoor Low Design Control Temperature: -60°F to 32°F (-51°C to 0°C)
Return Min. Control Temperature: 80°F to 180°F (27°C to 82°C)
Boiler Heat Post Purge: Off, 10 seconds to 30 minutes (factory default is 30 seconds)
Pump/Valve Exercise: 30 seconds per 2 weeks of space heating inactivity
R-C Output (on Transformer): 38 VA, 24 Vac Class II
R-C Input (on Control and Zoning Modules): 24 Vac Class II (input on Control and Zoning Modules)
Demand Input: Heat Demand (Thermostat R-W), Auxiliary Demand, and DHW Demand – External dry contacts connection only
B-B Communication Bus Terminals: Low voltage, Class II, 2-wire polarity-insensitive, digital communicating link to other Control or Zoning modules.

Output Ratings: Boiler (T-T) – 24 Vac, 0.5A, 12VA; Auxiliary Low Voltage – 24 Vac, 0.5A, 12VA; Boiler Pump – 120 Vac/250 Vac 5A, 1/3HP; DHW Pump/Valve – 120 Vac/250 Vac 5A, 1/3HP; Auxiliary Pump – Dry contact output, 120 Vac/250 Vac 5A, 1/3 HP
Electrical Connections: Wire-clamp screw terminals, Maximum 2 x 14 AWG each on line voltage terminals
Operating Humidity Range (% RH): 5 to 90% RH, non-condensing
WWSD (Warm Weather Shut Down) Temperature: Off, 35°F to 100°F Off, 1°C to 38°C)
Sensor: Supply/Return Sensor – 10 kilohm NTC thermistor at 25°C (77°F) ±0.5°F (±0.3°C) up to 500 ft (150 M) using 18 AWG or larger wire, Lead Length: 10 ft. (3050 mm); Outdoor Sensor – 10 kilohm NTC thermistor at 25°C (77°F) ± 0.5°F (±0.3°C) up to 500 ft (150 M) using 18 AWG or larger wire, beta=3892, Lead Length: 10 ft. (3050 mm)
Approvals, CSA: CSA C/US Certified to CSA and UL Standards, File No. LR76030
Temperature Ratings: Panel – 32°F to 130°F; Sensor – -58°F to +230°F (Panel – 0°C to 55°C; Sensor – -50°C to +110°C)
Supply Voltage: 120V 60 Hz

Material Number	Zoning Devices Controlled	Number of Zones	Zone Output Contact Rating	Zone Module Thermostat Input	Approximate, Dimensions	Weight	Replacement Parts
AQ25110B/U	None	1 (non-communicating)			13 in. wide x 8 in. high x 3 3/8 in. deep (33 cm wide x 20.3 cm high x 8.5 cm deep)	4.9 lbs (2.3 kg)	AQ10X38 24 Vac 38 VA transformer, AQ12C11 supply/return/mixed loop sensor, AQ15100B boiler reset module, AQ12C10 outdoor sensor
AQ25142B/U	Pumps or 2-wire valves	4	Pumps: 120 Vac/250 Vac, 5A, 1/3 HP, Valves: 24 Vac, 0.5 A, 12 VA	Low voltage, Class II, 2-wire polarity-insensitive, digital communicating with power link to AQ1000 series thermostat.	16 1/2 in. wide x 8 in. high x 3 3/8 in. deep (42 cm wide x 20.3 cm high x 8.5 cm deep)	5.7 lbs (2.6 kg)	AQ10X38 24 Vac 38 VA transformer, AQ15540B 4-zone pump expansion module, AQ12C11 supply/return/mixed loop sensor, AQ15100B boiler reset module, AQ12C10 outdoor sensor
AQ25144B/U	Zone valves with end switches	4	Pumps: 120 Vac/250 Vac, 5A, 1/3 HP, Valves: 24 Vac, 0.5 A, 12 VA	Low voltage, Class II, 2-wire polarity-insensitive, digital communicating with power link to AQ1000 series thermostat.	16 1/2 in. wide x 8 in. high x 3 3/8 in. deep (42 cm wide x 20.3 cm high x 8.5 cm deep)	5.7 lbs (2.6 kg)	AQ10X38 24 Vac 38 VA transformer, AQ12C11 supply/return/mixed loop sensor, AQ15740B 4-zone valve with end switch expansion module, AQ15100B boiler reset module, AQ12C10 outdoor sensor

AQ252 Universal Injection/Mixing Boiler Reset Control Panel for Hydronic Zoning System

Honeywell AQ252 AQUATROL universal injection/mixing boiler reset controls for single temperature, residential hydronic heating systems ensure ample supply of hot water through energy-efficient outdoor temperature compensated control.

- Displays of outdoor temperature on all AQ1000 thermostats when used with an AQ12C10 outdoor sensor (included)
- Customizable control settings allow for greater control and comfort
- Intuitive and accessible programming interface and central program of zone set points and setback
- Zoning control for up to four zones and can be up to 64 zones using expansion panels
- Boiler short cycling protection, boiler post purge and boiler shock prevent from cold water returning to boiler
- Automated test and purge feature for quick start-up and troubleshooting
- Line and low-voltage output and domestic hot water priority and priority override protection
- Non-volatile EPROM memory retains program settings

Application: Controls one boiler and one mixing (either variable speed injection or floating valve mixing) loop in a hydronic zoning system.
Thermostat Compatibility: AQ1000 Series 2-wire communicating thermostats and most digital thermostats
Setback Program: 7 day, up to 2 setback periods/day.
User Interface: LCD Display and a 7 button Key Pad
Boiler Control Temperature: Supply – Max: OFF, 120°F to 225°F; Min: OFF, 59°F to 180°F; Differential – 2°F to 41°F or Auto (minimum 2 minutes on time) (Supply – Max: OFF, 49°C to 107°C; Min: OFF, 15°C to 82°C; Differential – 1°C to 23°C or Auto (minimum 2 minutes on time))
Boiler Design Temperature: 80°F to 210°F (26°C to 99°C)
Outdoor Low Design Control Temperature: -60°F to 32°F (-51°C to 0°C)
Return Min. Control Temperature: 80°F to 180°F (2°C to 82°C)
Boiler Heat Post Purge: Off, 10 seconds to 30 minutes (factory default is 30 seconds)
Pump/Valve Exercise: 30 seconds per 2 weeks of space heating inactivity
R-C Output (on Transformer): 38 VA, 24 Vac Class II
R-C Input (on Control and Zoning Modules): 24 Vac Class II (input on Control and Zoning Modules)
Demand Input: Heat Demand (Thermostat R-W), Auxiliary Demand, and DHW Demand – External dry contacts connection only
B-B Communication Bus Terminals: Low voltage, Class II, 2-wire polarity-insensitive, digital communicating link to other Control or Zoning modules.
Zone Module Thermostat Input: Low voltage, Class II, 2-wire polarity-insensitive, digital communicating with power link to AQ1000 series thermostat.
Output Ratings: Boiler (T-T) – 24 Vac, 0.5A, 12VA; Auxiliary Low Voltage – 24 Vac, 0.5A, 12VA; Boiler Pump – 120 Vac/250 Vac 5A, 1/3HP; DHW Pump/Valve – 120 Vac 5A, 1/3HP; Auxiliary Pump – Dry contact output, 120 Vac/250 Vac 5A, 1/3 HP
Mixing Valve Floating Output (Com,O,C): 24 Vac rated dry contacts
Mixing Valve Modulating Output: 0-10 Vdc
Secondary Pump Output Rating: 120 Vac 5A, 1/3HP
Variable Speed Injection Pump Output: Triac modulated; 120 Vac, 2.1A, 1/6HP
Electrical Connections: Wire-clamp screw terminals, Maximum 2 x 14 AWG each on line voltage terminals
Operating Humidity Range (% RH): 5 to 90% RH, non-condensing
Secondary Loop Temperature Range: Mixing (Supply) max control – 80°F to 210°F; Mixing (Supply) min control – 35°F to 150°F; Mixing (Supply) Design Temperature – 70°F to 210°F; Return min control – 80°F to 180°F (Mixing (Supply) max control – 27°C to 99°C; Mixing (Supply) min control – 2°C to 66°C; Mixing (Supply) Design Temperature – 21°C to 99°C; Return min control – 27°C to 82°C)
WWSD (Warm Weather Shut Down) Temperature: Off, 35°F to 100°F (Off, 1°C to 38°C)
Sensor: Supply/Return Sensor – 10 kilohm NTC thermistor at 25°C (77°F) ±0.5°F (±0.3°C) up to 500 ft (150 M) using 18 AWG or larger wire, Lead Length: 10 ft. (3050 mm); Outdoor Sensor – 10 kilohm NTC thermistor at 25°C (77°F) ± 0.5°F (±0.3°C) up to 500 ft (150 M) using 18 AWG or larger wire, beta=3892, Lead Length: 10 ft. (3050 mm)
Approvals, CSA: CSA C/US Certified to CSA and UL Standards, File No. LR76030
Approximate, Dimensions: 16 1/2 in. wide x 8 in. high x 3 3/8 in. deep (42 cm wide x 20.3 cm high x 8.5 cm deep)
Weight: 6.0 lbs (2.7 kg)
Temperature Ratings: Panel – 32°F to 130°F; Sensor – -58°F to +230°F (Panel – 0°C to 55°C; Sensor – -50°C to +110°C)
Supply Voltage: 120V 60 Hz

Material Number	Zoning Devices Controlled	Number of Zones	Zone Output Contact Rating	Replacement Parts
AQ25242B/U	Zone pumps or 2-wire valves (line voltage)	4	Pumps: 120 Vac/250 Vac, 5A, 1/3 HP, Valves: 24 Vac, 0.5 A, 12 VA	AQ10X38 24 Vac 38 VA transformer, AQ15540B 4-zone pump expansion module, AQ12C11 supply/return/mixed loop sensor, AQ12C10 outdoor sensor, AQ15200B universal injection/mixing boiler reset module
AQ25244B/U	Zone valves with end switches	4	Pumps: 120 Vac/250 Vac, 5A, 1/3 HP, Valves: 24 Vac, 0.5 A, 12 VA	AQ10X38 24 Vac 38 VA transformer, AQ12C11 supply/return/mixed loop sensor, AQ15740B 4-zone valve with end switch expansion module, AQ12C10 outdoor sensor, AQ15200B universal injection/ mixing boiler reset module

AQ254 Add-a-Temperature Injection/Mixing Expansion Control Panel for Hydronic Zoning System

Honeywell AQ254 add-a-temperature expansion control panel is used in conjuction with AQ250, AQ25A, AQ251 or AQ252 control panels to provide one additional loop temperature control capability for up to 16 zones, when used with AQ255/AQ257 panels.

- Add-on control panel to the main (AQ250, AQ25A, AQ251, AQ252) control panel
- Each of the 16 zones connected to it are assigned to the system's primary or secondary loop
- Up to 3 AQ254 panels can be added to the main control panel
- Controlled mixed loop temperature by a variable speed injection pump or motorized mixing valve connected to the AQ254
- Intuitive and accessible programming interface and central program of zone set points and setback
- Customizable mixing control settings provide greater control and comfort
- Features zone synchronization through Zone of Greatest Demand control

Application: Expanded zone control and mixed loop temperature control in a hydronic zoning system, Mixed loop target temperature is reset by either outdoor temperature or calculated system load based on indoor temperature feedback, Mixing is target controlled by a variable speed injection pump or motorized valve
Thermostat Compatibility: AQ1000 Series 2-wire communicating thermostats and most digital thermostats
User Interface: LCD Display and a 3 button Key Pad
R-C Output (on Transformer): 38 VA, 24 Vac Class II
R-C Input (on Control and Zoning Modules): 24 Vac Class II (input on Control and Zoning Modules)
B-B Communication Bus Terminals: Low voltage, Class II, 2-wire polarity-insensitive, digital communicating link to other Control or Zoning modules.
Output Ratings: Auxiliary Pump – Dry contact output, 120 Vac/250 Vac 5A, 1/3 HP
Secondary Pump Output Rating: 120 Vac 5A, 1/3HP
Variable Speed Injection Pump Output: Triac modulated; 120 Vac, 2.1A, 1/6HP

Electrical Connections: Wire-clamp screw terminals, Maximum 2 x 14 AWG each on line voltage terminals
Operating Humidity Range (% RH): 5 to 90% RH, non-condensing
Secondary Loop Temperature Range: Mixing (Supply) max control – 80°F to 210°F; Mixing (Supply) min control – 35°F to 150°F; Mixing (Supply) Design Temperature – 70°F to 210°F; Return min control – 80°F to 180°F (Mixing (Supply) max control – 27°C to 99°C; Mixing (Supply) min control – 2°C to 66°C; Mixing (Supply) Design Temperature – 21°C to 99°C; Return min control – 27°C to 82°C)
Approvals, CSA: CSA C/US Certified to CSA and UL Standards, File No. LR76030
Approximate, Dimensions: 9 1/2 in. wide x 8 in. high x 3 3/8 in. deep (24 cm wide x 20.3 cm high x 8.5 cm deep)
Weight: 3.9 lbs (1.8 kg)
Temperature Ratings: Panel – 32°F to 130°F; Sensor – -58°F to +230°F (Panel – 0°C to 55°C; Sensor – -50°C to +110°C)
Supply Voltage: 120V 60 Hz

Material Number	Mixing Valve Floating Output (Com,O,C)	Replacement Parts
AQ25400B/U	24 Vac rated dry contacts	AQ10X38 24 Vac 38 VA transformer, AQ12C11 supply/return/mixed loop sensor, AQ15400B Add-A-Temperature expansion control module

AQ255 and AQ257 Zoning Expansion Panel for Hydronic Zoning System

Honeywell AQ255 AQUATROl expansion zoning panels work with AQ2000 boiler control panels and AQ1000 communicating thermostats to control up to four space heating zones, up to 16 zones with additional panels.

- Features AQ255 for zoning with pumps or zone valves without end switches
- Auto test function tests zones at system start up and allows for operator controlled testing of zones
- LED lights offer visual diagnostics of zone operation
- Adjacent zoning panels can operate different zone equipment
- Easily switch from zone valves to pumps with same zoning module
- R-C transformer and B-B data bus terminal connections (network communication) for easy expansion
- Zones can energize a group pump via Aux Out dry contacts
- Zone synchronization through Zone of Greatest Demand control

Application: Zoning control for hydronic zoning system
Thermostat Compatibility: AQ1000 Series 2-wire communicating thermostats and most digital thermostats
User Interface: DIP Switches
R-C Input (on Control and Zoning Modules): 24 Vac Class II (input on Control and Zoning Modules)
B-B Communication Bus Terminals: Low voltage, Class II, 2-wire polarity-insensitive, digital communicating link to other Control or Zoning modules.
Zone Module Thermostat Input: Low voltage, Class II, 2-wire polarity-insensitive, digital communicating with power link to AQ1000 series thermostat.
Electrical Connections: Wire-clamp screw terminals, Maximum 2 x 14 AWG each on line voltage terminals
Operating Humidity Range (% RH): 5 to 90% RH, non-condensing
Approvals, CSA: CSA C/US Certified to CSA and UL Standards, File No. LR76030
Approximate, Dimensions: 9 1/2 in. wide x 8 in. high x 3 3/8 in. deep (24 cm wide x 20.3 cm high x 8.5 cm deep)
Temperature Ratings: Panel – 32°F to 130°F (Panel – 0°C to 55°C)

Material Number	Zoning Devices Controlled	Number of Zones	Zone Output Contact Rating	Weight	Replacement Parts
AQ25542B/U	Zone pumps or 2-wire valves (line voltage)	4	120 Vac/250 Vac, 5A, 1/3 HP	2.1 lbs (1 kg)	AQ15540B 4-zone pump expansion module
AQ25742B/U	2-wire valve (24 Vac)	4	120 Vac/250 Vac, 0.5A, 12VA	3.9 lbs (1.8 kg)	AQ10X38 24 Vac 38 VA transformer, AQ15540B 4-zone pump expansion module
AQ25744B/U	Zone valves with end switches (24 Vac)	4	120 Vac/250 Vac, 0.5A, 12VA	3.9 lbs (1.8 kg)	AQ10X38 24 Vac 38 VA transformer, AQ15740B 4-zone valve with end switch expansion module

AQ2000 Series Replacement Control Modules

Replacement control modules for AQ2000 panels

Boiler Control Temperature: Differential – 2°F to 41°F or Auto (minimum 2 minutes on time) (Differential – 1°C to 23°C or Auto (minimum 2 minutes on time))
Pump/Valve Exercise: 30 seconds per 2 weeks of space heating inactivity
R-C Input (on Control and Zoning Modules): 24 Vac Class II (input on Control and Zoning Modules)
B-B Communication Bus Terminals: Low voltage, Class II, 2-wire polarity-insensitive, digital communicating link to other Control or Zoning modules.
Output Ratings: AQ15A00B-Boiler (T-T) – 24 Vac, 0.5A, 12VA; Auxiliary Low Voltage – 24 Vac, 0.5A, 12VA
Electrical Connections: Wire-clamp screw terminals, Maximum 2 x 14 AWG each on line voltage terminals
Operating Humidity Range (% RH): 5 to 90% RH, non-condensing
Approvals, CSA: CSA C/US Certified to CSA and UL Standards, File No. LR76030
Approximate, Dimensions: AQ15A00B-7 1/8 in. wide x 2 1/2 in. high x 4 1/4 in. deep (AQ15A00B-18 cm wide x 94 cm high x 10.09 cm deep)
Weight: AQ15A00B-1.0 lbs (AQ15A00B-0.5 kg)
Temperature Ratings: Panel – 32°F to 130°F (Panel – 0°C to 55°C)

Material Number	Application	Setback Program	User Interface	Boiler Heat Post Purge	Demand Input	Mixing Valve Modulating Output
AQ15A00B/U	Replacement boiler control module for AQ25A	7 day, up to 2 setback periods/day.	LCD Display and a 7 button Key Pad	30 seconds (sent to DHW tank or Zone of Greatest Demand - selectable)	Heat Demand (Thermostat R-W), Auxiliary Demand, and DHW Demand – External dry contacts connection only	0-10 Vdc to boiler

AQ2000 Series Replacement Zoning Modules

Replacement Zoning Modules for AQ2000 panels

Thermostat Compatibility: AQ1000 Series 2-wire communicating thermostats and most digital thermostats
R-C Input (on Control and Zoning Modules): 24 Vac Class II (input on Control and Zoning Modules)
B-B Communication Bus Terminals: Low voltage, Class II, 2-wire polarity-insensitive, digital communicating link to other Control or Zoning modules.
Zone Module Thermostat Input: Low voltage, Class II, 2-wire polarity-insensitive, digital communicating with power link to AQ1000 series thermostat.
Electrical Connections: Wire-clamp screw terminals, Maximum 2 x 14 AWG each on line voltage terminals
Operating Humidity Range (% RH): 5 to 90% RH, non-condensing
Approvals, CSA: CSA C/US Certified to CSA and UL Standards, File No. LR76030
Approximate, Dimensions: 3 1/2 in. wide x 2 1/2 in. high x 4 1/4 in. deep (9 cm wide x 94 cm high x 10.09 cm deep)
Weight: 0.6 lb (0.3 kg)
Temperature Ratings: Panel – 32°F to 130°F (Panel – 0°C to 55°C)

Material Number	Application	Zoning Devices Controlled	User Interface	Number of Zones	Zone Ouptut Contact Rating
AQ15540B/U	Replacement 4 zone pump expansion module for AQ25542	Zone pumps or 2-wire valves (line voltage)	DIP Switches	4	120 Vac/250 Vac, 5A, 1/3 HP

AQ2000 Series Accessories and Replacement Parts

Material Number	Description	
AQ10X38/U	This Replacement Transformer Module is used for AQ250, AQ25A, AQ251, AQ252, AQ254, AQ257 and AQ25742B series control and zoning panels. It can be used to add an additional 38 VA power per transformer to drive high VA devices.	
AQ11D15/U	This Replacement Enclosure, used for AQ25042B, AQ25044B, AQ25110B panels, includes; case, cover, and DIN rail. It can be used to add extra AQ10X38 transformers or hide system wiring and component.	
AQ11D20/U	This Replacement Enclosure, used for AQ25A42B, AQ25A44B, AQ25142B, AQ25144B, AQ25242B, and AQ25244B panels, includes; case, cover, and DIN rail. It can be used to add extra AQ10X38 transformers or hide system wiring and component.	
AQ12C10/U	This Outdoor Sensor, with 10 feet of lead wires and a plastic mounting bracket, is used with AQ2000 series programmable control panels.	
AQ12C11/U	This Supply/Return/Mixed Loop Pipe Sensor, with 10 feet of lead wires, is used with AQ2000 series control panels.	
AQ12C20/U	This Slab/Floor Sensor, with 15 feet lead length is used with AQ2000 series control panels and AQ1000 series thermostats, to control floor temperatures of in-floor radiant heating applications.	

AQ1000TN2 Non-Programmable Communicating Thermostat

Honeywell AQ1000TN2 thermostat controls the ambient air or floor temperature in hydronic heating applications. To provide zoning control, it communicates with and is powered by a Honeywell AQ2000 series zoning module.

- Two-wire polarity-insensitive non-programmable network communicating thermostat
- User buttons feature liquid crystal display as well as outdoor, indoor and floor temperature displays
- Floor temperature sensing with minimum and maximum limits (when used with optional AQ12C20 Slab/Floor Sensor (sold separately))
- Selectable temporary and permanent backlight

Application: Hydronic single-stage zoning heat
Temperature Control Mode Selections: "A" for Ambient Air; "F" for Floor; "AF" for Ambient & Floor.
Mounting: Vertical
Color: Premier White®
Zones: Single or Multi-zone; Network Zoning available
Ambient Temperature Range: 32°F to 158°F (0°C to 70°C)
Shipping and Storage Temperature Range: -30°C to 55°C (-20°F to 130°F)
Operating Humidity Range (% RH): 5 to 90% RH, non-condensing
Electrical Connections: Wire-clamp screw terminals
Approximate, Dimensions: 2.8 in. wide x 4.6 in. high x 1.0 in. deep (7 cm wide x 12 cm high x 2.5 cm deep)
Sensor Element: Thermistor
Network Bus: Low voltage, Class II, 2-wire polarity-insensitive, digital communicating link to AQ2000 series zoning modules.
External Sensors Available: Floor Sensor - 10 Kohm NTC thermistor at 25°C (77°F) +/- 0.5°F (+/-0.3°C) up to 500 ft (150 M) using 18 AWG or larger wire, beta=3892. Lead Length: 10 ft. (3050 mm) with rating 58°F to 230°F (-50°C to 110°C)
Outdoor Temperature Display Range: -58°F to 149°F (-5°C to 65°C)
Weight: 0.2 lb (0.1 kg)
Tradeline Value: Tradeline
User Interface: DIP Switches

Material Number	Setting Temperature Range	Differential Temperature	Terminal Designations	Display	Power Method
AQ1000TN2/U	Ambient and Floor -40°F to 100°F (Ambient and Floor -5°C to 38°C)	± 1°F (±0.5°C)	TH, TH, Sensor, Sensor	LCD Display; Icons in display: Heat On, Vacation Mode, Comfort/Unoccupied, Keypad Lock, Set point; Temperatures Displayed: Indoor, Setpoint, Outdoor	Powered (24 Vdc) by AQ zoning module

AQ1000TP2 Programmable Heat/Cool Thermostat

Honeywell AQ1000TP2 thermostat controls the ambient air or floor temperature in hydronic heating applications. To providing zoning control, it communicates with and is powered by a Honeywell AQ2000 series zoning module.

- Single-stage heating and cooling with outdoor, indoor, and floor temperature display
- Two-wire polarity-insensitive non-programmable network communicating thermostat
- Seven-day programmable thermostat with liquid crystal display and seven user buttons for programming
- Selectable temporary and permanent backlight

Application: Hydronic single-stage zoning, heating and cooling
Temperature Control Mode Selections: Air for Ambient Air; "Floor" for Floor; "Air/Floor" for Ambient & Floor
Mounting: Vertical
Color: Premier White®
Programmability: 7-day programmable
Zones: Single or Multi-zone; Network Zoning available
Ambient Temperature Range: 32°F to 158°F (0°C to 70°C)
Shipping and Storage Temperature Range: -30°C to 55°C (-20°F to 130°F)
Operating Humidity Range (% RH): 5 to 90% RH, non-condensing
Electrical Connections: Wire-clamp screw terminals
Approximate, Dimensions: 3.0 in. wide x 4.9 in. high x 1.0 in. deep (7.8 cm wide x 12.5 cm high 2.5 cm deep)
Sensor Element: Thermistor
Network Bus: Low voltage, Class II, 2-wire polarity-insensitive, digital communicating link to AQ2000 series zoning modules.
External Sensors Available: Floor Sensor - 10 Kohm NTC thermistor at 25°C (77°F) +/- 0.5°F (+/-0.3°C) up to 500 ft (150 M) using 18 AWG or larger wire, beta=3892. Lead Length: 10 ft. (3050 mm) with rating 58°F to 230°F (-50°C to 110°C)
Outdoor Temperature Display Range: -58°F to 149°F (-5°C to 65°C)
Weight: 0.3 lb (0.5 kg)
Tradeline Value: Tradeline
User Interface: DIP Switches

Material Number	Setting Temperature Range	Differential Temperature	Terminal Designations	Display	Power Method
AQ1000TP2/U	Ambient and Floor-40°F to 100°F (Ambient and Floor -5°C to 38°C)	± 1°F (±0.5°C)	TH, TH, Sensor, Sensor	LCD Display; Icons in display: Heat On, Cool On, Fan On, Comfort/Unoccupied, Keypad Lock, Set point, Vacation Mode; 7 user programming buttons; Temperatures Displayed: Indoor, Setpoint, Outdoor	Powered (24 Vdc) by AQ zoning module

R847 Heavy Duty Relay

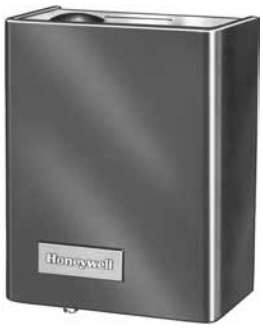

R847A wired to break one side of the circuit with SPST switching.

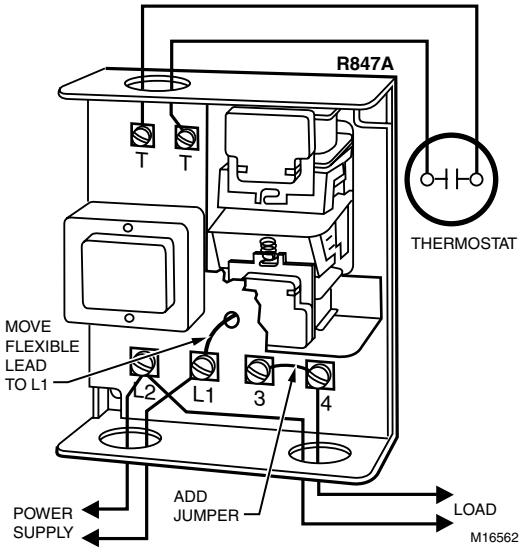

Designed for control of relatively heavy duty 120 or 240 Vac electrical loads such as cooling compressors.

- Internal, flexible leads permit SPST or DPST switching.

Application: Enclosed heavy duty DPST or SPST switching relay for 24 volt 2-wire thermostat control of high-current loads such as cooling compressors. 120 volt primary power supply.
Electrical Connections: Main- 2-Wire; Control Circuit- 2-Wire
Coil Ratings Voltage: 24 Vac; Maximum Pull-in Voltage-2.0 A
Coil Ratings: 8.4 VA (Sealed); 21.4 VA (inrush)
Coil Ratings Current: 0.4A
Contact Ratings (AFL): 22A @ 120 Vac: 10A @ 240 Vac
Contact Ratings (ALR): 120 Vac – 100A; 240 Vac – 50A
Approximate, Dimensions: 5 1/4 in. high x 4 1/4 in. wide x 2 3/4 in. deep (133 mm high x 108 mm wide x 70 mm deep)
Approvals, CSA: Certified: File No. LR1620
Approvals, Underwriters Laboratories Inc.: Listed: File No. SA481, Guide No. SDF4
Tradeline Value: Tradeline

Material Number	Input Voltage	Frequency	Switching	Description	Includes
R847A1085/U	120V	50 Hz; 60 Hz	DPST or SPST	This 120V, 50 Hz or 60 Hz Heavy Duty Switching Relay with integral transform, and DPST or SPST line voltage relays, is used for 24 volt 2-wire thermostat control of high-current loads such as cooling compressors.	Integral transformer, enclosure

R856 Control Center

Provides 24 volt control of line voltage motors, fans, blowers, or pumps up to 1 hp.

- Integral 45 VA transformer to supply low voltage power for the system.
- Low voltage terminal strip for easy thermostat and panel connections.

Application: Enclosed fan center for 24 volt control of a line voltage motor, evaporator fan, or pump up to 1 horsepower. Includes wring terminal board and 45 VA transformer.
Input Voltage: 120V
Frequency: 60 Hz
Coil Ratings: 6 VA (Sealed); 11 VA (inrush)
Coil Ratings Current: 0.22A
Electrical Ratings, Contacts: Horsepower – 3/4 hp N.O.; 1/2 hp N.C.
Contact Ratings (AFL): 14.0A N.O.; 10.0A N.C. @ 120 Vac
Contact Ratings (ALR): 120 Vac – 84.0A N.C., 80.0A N.C.
Approximate, Dimensions: 7 1/8 in. high x 4 1/2 in. wide x 3 5/16 in. deep (181 mm high x 114 mm wide x 84 mm deep)
Approvals, CSA: Certified: File No. LR95329-1
Approvals, Underwriters Laboratories Inc.: Listed: File No. E4436, Vol. 6 Sec. 9
Includes: External transformer, enclosure

Material Number	Coil Ratings Voltage	Switching
R856B1002/U	24 Vac	SPST

RA89; RA832; R845 Hydronic Switching Relay

Provides intermediate switching of a line voltage device from a low voltage controller.

- Integral transformer provides low voltage power for control circuit

Input Voltage: 120V
Electrical Connections: Control Circuit- 2-Wire
Frequency: 50 Hz; 60 Hz
Coil Ratings Voltage: 24 Vac
Coil Ratings Current: 0.4A
Electrical Ratings: Maximum Input-5.0 W
Contact Ratings (resistive): At 120 Vac –10A; 240 Vac – 6.0A
Temperature Ratings: 115°F maximum ambient for 60 Hz. 105°F Max. Ambient for 50 Hz. (46°C maximum ambient for 60 Hz. 41°C maximum ambient for 50 Hz.)
Approximate, Dimensions: 5 1/4 in. high x 4 1/4 in. wide x 2 5/16 in. deep (133 mm high x 108 mm wide x 59 mm deep)
Approvals, CSA: Certified: File No. LR1620
Approvals, Underwriters Laboratories Inc.: Listed: File No. E4436, Guide No. XAPX
Includes: Integral transformer, enclosure
Tradeline Value: Tradeline

Material Number	Application	Switching	Electrical Ratings, Contacts	Contact Ratings (AFL)	Contact Ratings (ALR)	Pilot Duty Ratings	Description	Comment
R845A1030/U	Enclosed intermediate DPST switching relay for 24 volt 2 wire thermostat control of one line voltage and one line or low voltage devices. 120 volt primary power supply.	DPST; one pole line voltage, the other line or low voltage	Maximum connected load is 2000 VA (120 Vac to 240 Vac)	At 120 Vac – 7.4A; 240 Vac – 3.7A: Secondary – at 120 Vac 3A; at 240 Vac 2A	At 120 Vac – 44.4A; 240 Vac –22.2A: Secondary – at 120 Vac 18A; at 240 Vac 12A	Secondary – 50 VA @ 24V	This 120V, 60 Hz Switching relay with internal transformer, provides DPST switching for hot water zone control systems, or SPST control of two separate loads.	Thermostat Compatibility – Low voltage (Class 2) 2-wire
RA832A1066/U	Provide intermediate DPST switching of a line voltage device from a low voltage controller.	DPST; one pole line voltage, the other low voltage or millivolt	Maximum connected load is 2000 VA (120 Vac to 240 Vac); Secondary DC Rating – 1A @ 12 Vdc; Secondary millivolt Rating – 300 mA min. @ 750 mV	At 120 Vac – 7.4A AFL; 240 Vac – 3.7A	At 120 Vac – 44.4A; 240 Vac – 22.2A	Secondary – 50 VA @ 24V	This 120V Switching Relay with internal transformer is used for DPST switching of two line voltage loads having a common power source.	
RA89A1074/U	Provide intermediate SPST switching of a line voltage device from a low voltage controller.	SPST		At 120 Vac – 10.2A; 240 Vac – 5.1A	At 120 Vac – 61.2A; 240 Vac – 30.6A		This 120V Switching Relay with internal transformer, provides intermediate SPST switching of a line voltage device from a low voltage controller.	

R8845U Universal Switching Relay

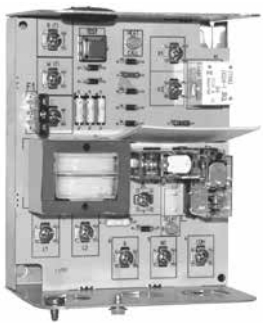

The R8845U Universal Switching Relay with 24 V transformer provides intermediate switching of line- and low-voltage devices from a line- or low-voltage controller and is typically applied in Hydronic heating systems.

- Replaceable socketed relays.
- Two troubleshooting LED.
- Push-to-test button.
- Replaceable transformer fuse.
- Low-voltage contact rating for PowerPile applications.
- Long-life DC relay drive control technology.
- Relay for use with external 24 Vac or 24 Vdc supply, with line-voltage control, or with internal 24 V transformer supply.
- One model replaces many competitor models.
- One model may replace many Honeywell models: R182A,B,C,J; R482A,B,C,J; R845; R882A,B,C,J and RA832.

Dimensions in inches (millimeters)

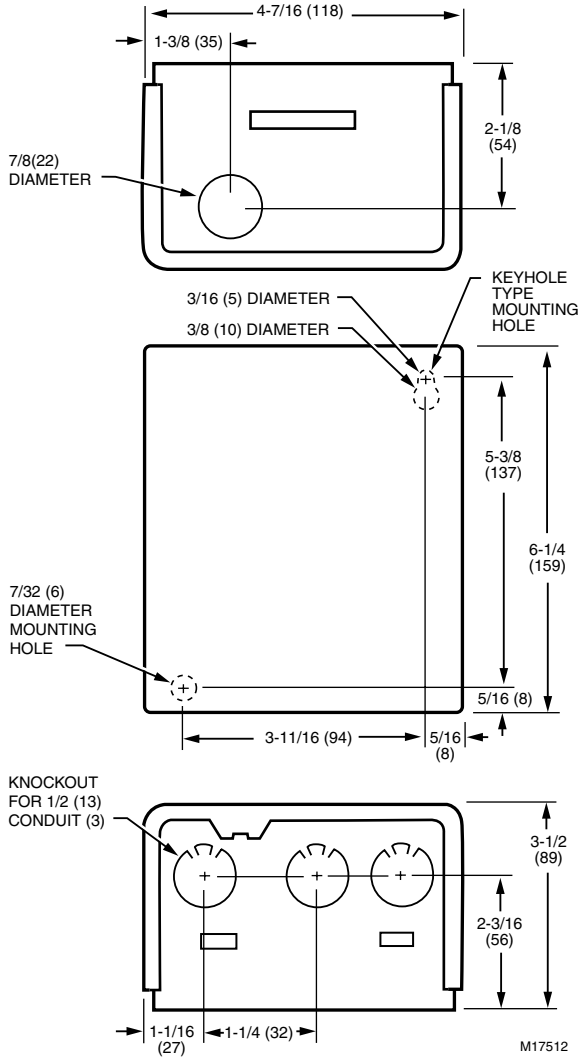

Application: Enclosed Universal switching relay with internal transformer for 24 volt 2 or 3 wire thermostat control of line voltage devices. Two line voltage SPST relays and one low voltage SPST relay with PowerPile rating.
Electrical Connections: Control Circuit- 2 or 3-wire
Coil Ratings Voltage: 24 Vac
Coil Ratings Current: 0.4A
Electrical Ratings, Contacts: Maximum connected load is 2000 VA
Contact Ratings (AFL): 7.4A AFL, 44.4A @ 120 Vac on each set of line-voltage contacts
Transformer: Secondary Rating- 24 Vac, 12 VA max., 9 VA available for external load. Secondary protected by replaceable 1A automotive fuse.
Operating Humidity Range (% RH): 0 to 90% RH, non-condensing
Temperature Ratings: Ambient: -20°F to +120°F (Ambient: -29°C to +49°C)
Approximate, Dimensions: 6 1/4 in. high x 4 7/16 in. wide x 3 1/2 in. deep (159 mm high x 118 mm wide x 89 mm deep)
Approvals, Underwriters Laboratories Inc.: Listed: File No. E4436, Guide No. XAPX
Approvals, Canadian Underwriters Laboratories Inc.: Listed: Guide No. XAPX7.
Comments: Thermostat Compatibility – Honeywell electromechanical and electronic 2- or 3-wire; Thermostat Heat Anticipator Setting – 0.12A

Material Number	Input Voltage	Frequency	Switching	Description	Includes
R8845U1003/U	120V	60 Hz	Two SPST, plus PowerPile® rated low voltage SPST relay. (If normally closed contacts are needed, use RA889A).	This 120V, 60 Hz Universal Switching Relay with internal transformer, Provides intermediate switching of line and low voltage devices from a line or low voltage controller	Integral transformer, enclosure

RA889A Switching Relay

The RA889A Switching Relay with 24 V controller provides intermediate switching of line- and low-voltage devices from a line- or low-voltage controller and is typically applied in Hydronic heating systems.

- High load switching capability.
- Troubleshooting LED.
- Push-to-test button.
- Replaceable transformer fuse.
- Long-life DC relay drive control technology.
- Relay for use with external 24 Vac or 24 Vdc supply, with line-voltage control, or with internal 24 V transformer supply.
- One model replaces many Honeywell models.
- Secondary of transformer protected by replaceable 1A automotive fuse.

Application: Provide intermediate SPDT and SPST switching of line- and low-voltage devices from a line- or low-voltage controller.
Electrical Ratings, Contacts: Maximum connected load is 2000 VA
Contact Ratings (AFL): 15A@ 120 Vac
Contact Ratings (ALR): 120 Vac – 30A
Transformer: Secondary Rating- 24 Vac, 12 VA max., 9 VA available for external load. Secondary protected by replaceable 1A automotive fuse.
Operating Humidity Range (% RH): 0 to 90% RH, non-condensing
Temperature Ratings: Ambient: -20°F to +120°F (Ambient: -29°C to +49°C)
Approximate, Dimensions: 6 1/4 in. high x 4 7/16 in. wide x 3 1/2 in. deep (159 mm high x 118 mm wide x 89 mm deep)
Approvals, Underwriters Laboratories Inc.: Listed: File No. E4436, Guide No. XAPX
Approvals, Canadian Underwriters Laboratories Inc.: Listed: Guide No. XAPX7.
Comments: Thermostat Compatibility – Honeywell electromechanical and electronic 2- or 3-wire; Thermostat Heat Anticipator Setting – 0.12A

Dimensions in inches (millimeters)

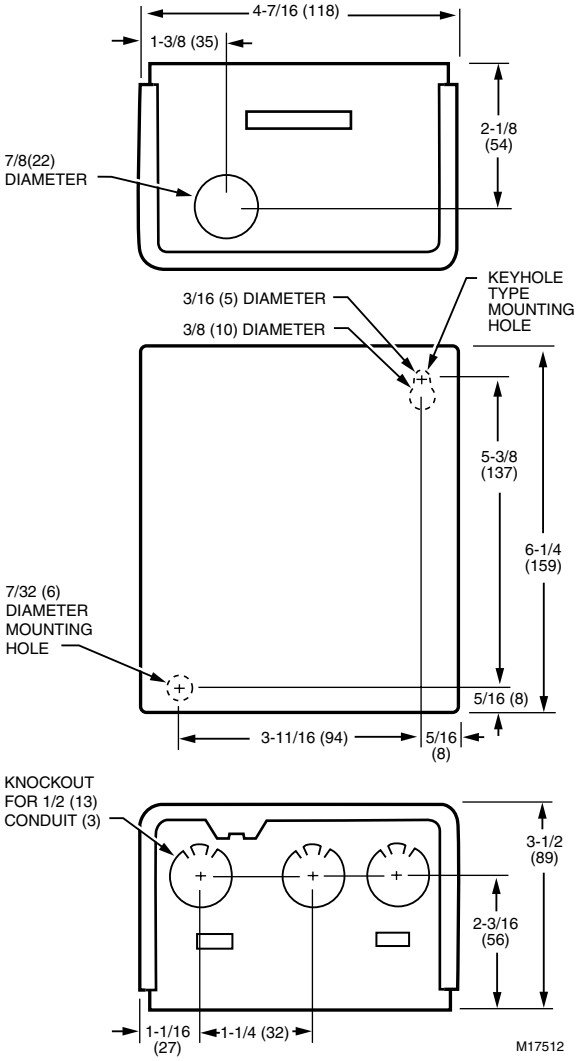

Material Number	Input Voltage	Frequency	Switching	Description	Includes
RA889A1001/U	120V	60 Hz	SPDT, plus PowerPile® rated low voltage SPST relay	This Enclosed 120V, 60 Hz switching relay with internal transformer, Provides intermediate SPDT and SPST switching of line- and low-voltage devices from a line- or low-voltage controller.	Integral transformer, enclosure

AT140 General Purpose Transformer for Hydronic Heating Controls

Honeywell 40 VA general purpose transformers power 24 Vac circuits. Although typically used in heating/cooling control systems, they can be used in any application that doesn't exceed the load ratings.

- Color-coded lead wires for primary connections and screw terminals for secondary connections
- Includes fixed 1/4 inch (6mm) male quick-connects (AT140A models only) or color-coded lead wires for primary and secondary connections
- Meets NEC Class 2 requirements and Underwriters Laboratories Standard UL 1585
- Identified Class 2 not wet, Class 3 wet

Frequency: 60 Hz
Mounting: Foot mounted, plate mounted on 2x4 in. or 4x4 in. outlet box, clamp mounted using outlet box knockout, or panel mounted

Approvals, Underwriters Laboratories Inc.: UL Listed: A,C,F models. File # E14881
Approvals, CSA: CSA Certified: A & B models.
Temperature Range: -20°F to +105°F (-29°C to +41°C)

Dimensions in inches (millimeters)

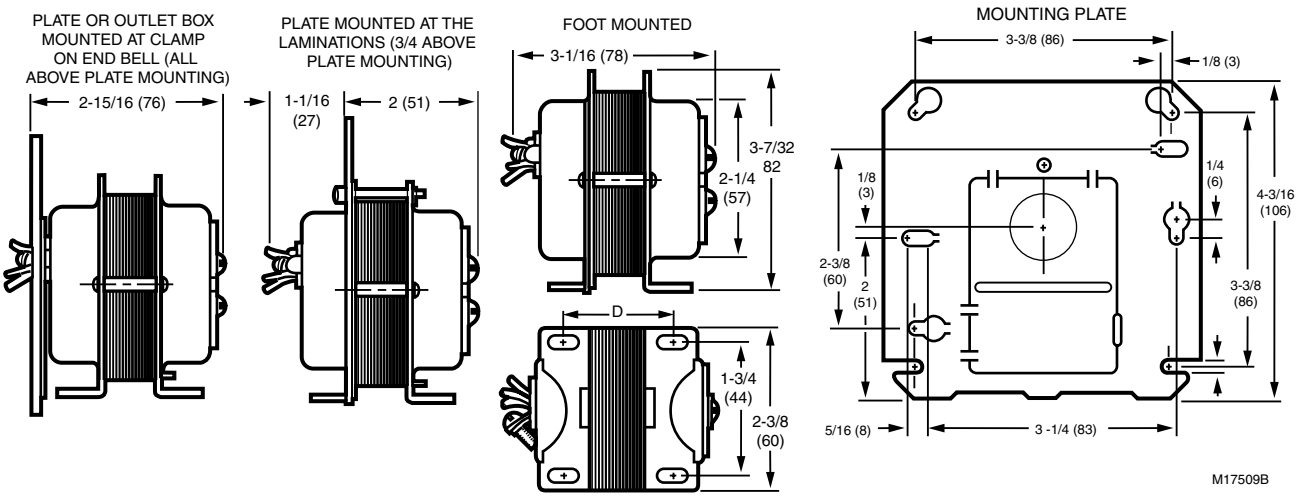

Material Number	Approximate, Dimensions	Electrical Ratings	Electrical Ratings, Output	Electrical Connections (Primary) (in.)	Electrical Connections (Primary) (mm)	Electrical Connections (Secondary) (in.)	Electrical Connections (Secondary) (mm)
AT140A1034/U	3 3/16 in. high x 2 3/8 in. wide x 3 1/8 in. deep (81 mm high x 60 mm wide x 79 mm deep)	Primary voltage – 120 Vac; Secondary voltage – 27 V.O.C.	24 Vac at 20 VA	9 in. leadwires	229 mm leadwires	(2) screw terminals	(2) screw terminals

M6063 Rotary Actuator

The Corona series of M6063 Actuator and V5442 Compact Rotary Valves provide integrated mixing of boiler supply, boiler return, loop supply, and loop return water in hydronic heating systems. The M6063 actuator enables automatic mixing operation.

- 24 Vac floating input for automatic control.
- Single screw attachment to V5442 valve body.
- Multi-poise mounting.
- Color-coded position indicator.
- Manual valve operator.
- Auxiliary end switch for cascade control outputs.
- Sealed assembly; flylead electrical connections.

Actuator Type: Rotary
Frequency: 50 Hz; 60 Hz
Torque Rating (lb-in.): 60 lb-in. Manual declutch
Torque Rating (Nm): 7 Nm Manual declutch
Auxiliary Switch Ratings: 24 Vac, 3A, 24 VA pilot duty, Class 2, normally closed, Gray cable. S1 (black/gray pair) opens at left (CCW) end stop. S2 (brown/pink pair) opens at right (CW) end stop.
Electrical Connections: Color-coded 40 in. (1 meter) cable
Cable: Blue=Common; Brown=Clockwise rotation; Black=Counter-clockwise rotation
Timing: 100 seconds for 90 degrees (full) stroke
Environmental, Electrical, or Ingress Protection Rating: Double insulated. IP44 according to 60529 Standard (exceeds NEMA 3).

Approximate, Dimensions: Approximately 3 5/16 in. high x 4 in. wide x 3 3/16 in. deep (Approximately 97 mm high x 101 mm wide x 81 mm deep)
Ambient Temperature Range: 32°F to 140°F (0°C to 60°C)
Shipping and Storage Temperature Range: -40°F to +140°F (-40°C to +60°C)
Operating Humidity Range (% RH): Less than 90% RH, non-condensing
Supply Voltage: 24V, Power Supply Rating – 3VA, SPDT or SP3T (tri-state) for proportional control

Dimensions in inches (millimeters)

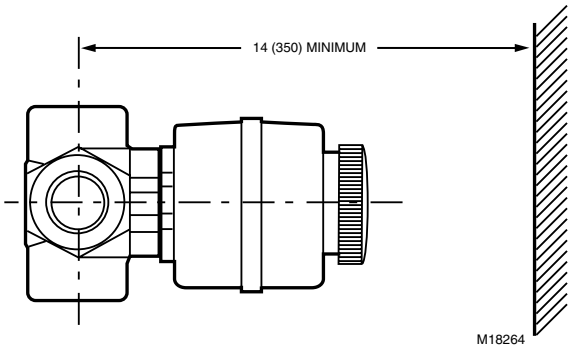

Distance for installation

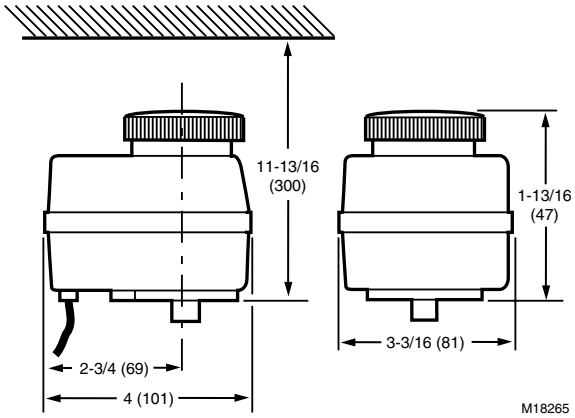

Material Number	Controller Compatibility	Control Signal	Comments	Used With
M6063A4007	PI or PID tri-state control signal for proportional control action, such as supplied by AQ252 and AQ254 Aquatrol modules	24 Vac Floating	Cross Reference: M6063 functionally replaces Centra VRK10-24 valve actuator when used with V5442 valve body.	V5442 Four-way mixing valve

VC Series Cartridge Cage 3-way Mixing

Control central heating and/or cooling systems, fan coil systems, radiators and convectors. Depending on the model selected, it can be controlled by either a low voltage SPST or SPDT or floating controller such as a room thermostat, Aquastat control, or flow switch.

- Three-way valves.
- Minimal actuator power consumption.
- Double insulated actuator.
- Quick-connect or one-meter cable electrical connections available.
- Safe for use with potable water.
- Quick and easy replacement of moving parts.
- Actuator head installation does not require draining the system.
- On/Off models with six second nominal timing (floating/modulating models available with 120 second timing).

Approximate, Dimensions: 3 9/16 in. high x 2 3/4 in. wide x 3 3/4 in. long (111 mm high x 68 mm wide x 89 mm long)
Coupling Controller: Integral
Aux Switch Ratings: 24 Vac, 2.2A pilot duty, Class 2, SPDT
Timing: 120 sec
Control Signal: 24 Vac Floating
Electrical Connections: Color-coded 40 in. (1 meter) cable
Voltage: 24V
Frequency: 50 Hz; 60 Hz

Power Supply Rating: 6 VA, SPDT, or SP3T (tri-state) for proportional control.
Differential (close-off) Pressure Rating: 60 psi (4 Bar)
Static Pressure Rating: 300 psi (20 Bar)
Median Temperature Range: 34°F to 203°F (1°C to 95°C)
Ambient Temperature Range: 32°F to 140°F (0°C to 60°C)
Shipping Temperature Range: -40°F to +150°F (-40°C to +65°C)
Materials (Body): Bronze

Valve and Actuator Kit

Material Number	Body Pattern	Pipe Size		Pipe Connection	Capacity	Flow Characteristic	Comments
		Inch	DN				
VC6831ML6111/U	Three-way	3/4 in.	DN20	Sweat	5.9 Cv	Linear	Comes with Valve VCZNB7100 and Actuator VC6831ZZ11; Use with max 50% glycol in water solution
VC6831MS6111/U	Three-way	1 in.	DN25	Sweat	6.6 Cv	Linear	Comes with Valve VCZMA7100 and Actuator VC6831ZZ11; Use with max 50% glycol in water solution

A La Carte Option

Actuators

Material Number	Voltage	Frequency	Power Consumption	Stroke Timing	End Switch	Cable Length
VC6834ZZ11/U	24 Vac	50 Hz; 60 Hz	6 VA	120 seconds	2-Position SPDT	60 inches

Valves

Material Number	Body Pattern	Pipe Size		Pipe Connection	Capacity	Flow Characteristic	Comments
		Inch	DN				
VCZMA7100/U	Three-way	1/2 in.	DN15	Sweat	3.7 Cv	Linear	Use with max 50% glycol in water solution
VCZML7100/U	Three-way	3/4 in.	DN20	Sweat	6.6 Cv	Linear	Use with max 50% glycol in water solution
VCZMR7100/U	Three-way	1 in.	DN25	NPT	8.3 Cv	Linear	Use with max 50% glycol in water solution
VCZMS7100/U	Three-way	1 in.	DN25	Sweat	8.3 Cv	Linear	Use with max 50% glycol in water solution
VCZND7100/U	Three-way	1-1/4 in.	DN32	NPT	9 Cv	Linear	Use with max 50% glycol in water solution
VCZNE7100/U	Three-way	1-1/4 in.	DN32	Sweat	9 Cv	Linear	Use with max 50% glycol in water solution

VC Series Quick Open Cartridge Cage 2-way Zone Valve

Control central heating and/or cooling systems, fan coil systems, radiators and convectors. Depending on the model selected, it can be controlled by either a low voltage SPST or SPDT or floating controller such as a room thermostat, Aquastat control, or flow switch.

- Two-way valves.
- Minimal actuator power consumption.
- Double insulated actuator.
- Quick-connect or one-meter cable electrical connections available.
- Safe for use with potable water.
- Quick and easy replacement of moving parts.
- Actuator head installation does not require draining the system.
- On/Off models with six second nominal timing (floating/modulating models available with 120 second timing).

Approximate, Dimensions: 3 9/16 in. high x 2 3/4 in. wide x 3 3/4 in. long (111 mm high x 68 mm wide x 89 mm long)
Coupling Controller: Integral
Aux Switch Ratings: 24 Vac, 2.2A pilot duty, Class 2, SPDT
Timing: 6 sec
Control Signal: 24 Vac Floating
Electrical Connections: Color-coded 40 in. (1 meter) cable
Voltage: 24V
Frequency: 50 Hz; 60 Hz

Power Supply Rating: 6 VA, SPDT, or SP3T (tri-state) for proportional control.
Differential (close-off) Pressure Rating: 60 psi (4 Bar)
Static Pressure Rating: 300 psi (20 Bar)
Median Temperature Range: 34°F to 203°F (1°C to 95°C)
Ambient Temperature Range: 32°F to 140°F (0°C to 60°C)
Shipping Temperature Range: -40°F to +150°F (-40°C to +65°C)
Materials (Body): Bronze

Valve and Actuator Kit

Material Number	Body Pattern	Pipe Size		Pipe Connection	Capacity	Flow Characteristic	Comments
		Inch	DN				
VC8715AM1000/U	Two-way	3/4 in.	DN20	Sweat	5.8 Cv	Quick Open; 6 Seconds	Comes with Valve VCZAM1100 and Actuator VC8715ZZ11; Use with max 50% glycol in water solution
VC8715AS1000/U	Two-way	1 in.	DN25	Sweat	7.0 Cv	Quick Open; 6 Seconds	Comes with Valve VCZAS1100 and Actuator VC8715ZZ11; Use with max 50% glycol in water solution

A La Carte Option

Actuators

Material Number	Voltage	Frequency	Power Consumption	Stroke Timing	End Switch	Cable Length
VC8715ZZ11/U	24 Vac	60 Hz	6 VA	6 seconds	–	60 inches
VC8714ZZ11/U	24 Vac	60 Hz	6 VA	6 seconds	2-Position SPST	60 inches

Valves

Material Number	Body Pattern	Pipe Size		Pipe Connection	Capacity	Flow Characteristic	Comments
		Inch	DN				
VCZBB1100/U	Two-way	1/2 in.	DN15	NPT	3.5 Cv	Quick Open	Use with max 50% glycol in water solution
VCZAA1100/U	Two-way	1/2 in.	DN15	Sweat	3.5 Cv	Quick Open	Use with max 50% glycol in water solution
VCZAL1100/U	Two-way	3/4 in.	DN20	NPT	4.7 Cv	Quick Open	Use with max 50% glycol in water solution
VCZAM1100/U	Two-way	3/4 in.	DN20	Sweat	4.7 Cv	Quick Open	Use with max 50% glycol in water solution
VCZAR1100/U	Two-way	1 in.	DN25	NPT	6.6 Cv	Quick Open	Use with max 50% glycol in water solution
VCZAS1100/U	Two-way	1 in.	DN25	Sweat	6.6 Cv	Quick Open	Use with max 50% glycol in water solution
VCZBD1100/U	Two-way	1-1/4 in.	DN32	NPT	7 Cv	Quick Open	Use with max 50% glycol in water solution
VCZBE1100/U	Two-way	1-1/4 in.	DN32	Sweat	7 Cv	Quick Open	Use with max 50% glycol in water solution

VC Series Linear/Modulating Cartridge Cage 2-way Zone Valve

Control central heating and/or cooling systems, fan coil systems, radiators and convectors. Depending on the model selected, it can be controlled by either a low voltage SPST or SPDT or floating controller such as a room thermostat, Aquastat control, or flow switch.

- Two-way valves.
- Minimal actuator power consumption.
- Double insulated actuator.
- Quick-connect or one-meter cable electrical connections available.
- Safe for use with potable water.
- Quick and easy replacement of moving parts.
- Actuator head installation does not require draining the system.
- On/Off models with six second nominal timing (floating/modulating models available with 120 second timing).

Approximate, Dimensions: 3 9/16 in. high x 2 3/4 in. wide x 3 3/4 in. long (111 mm high x 68 mm wide x 89 mm long)
Coupling Controller: Integral
Aux Switch Ratings: 24 Vac, 2.2A pilot duty, Class 2, SPDT
Timing: 120 sec
Control Signal: 24 Vac Floating
Electrical Connections: Color-coded 40 in. (1 meter) cable
Voltage: 24V
Frequency: 50 Hz; 60 Hz

Power Supply Rating: 6 VA, SPDT, or SP3T (tri-state) for proportional control.
Differential (close-off) Pressure Rating: 60 psi (4 Bar)
Static Pressure Rating: 300 psi (20 Bar)
Median Temperature Range: 34°F to 203°F (1°C to 95°C)
Ambient Temperature Range: 32°F to 140°F (0°C to 60°C)
Shipping Temperature Range: -40°F to +150°F (-40°C to +65°C)
Materials (Body): Bronze

Valve and Actuator Kit

Material Number	Body Pattern	Pipe Size		Pipe Connection	Capacity	Flow Characteristic	Comments
		Inch	DN				
VC6831AA1111/U	Two-way	1/2 in.	DN15	Sweat	3.2 Cv	Linear	Comes with Valve VCZAA3100 and Actuator VC6831ZZ11; Use with max 50% glycol in water solution
VC6831AM1111/U	Two-way	3/4 in.	Dn20	Sweat	4.6 Cv	Linear	Comes with Valve VCZAM3100 and Actuator VC6831ZZ11; Use with max 50% glycol in water solution

A La Carte Option

Actuators

Material Number	Voltage	Frequency	Power Consumption	Stroke Timing	End Switch	Cable Length
VC6834ZZ11/U	24 Vac	50 Hz; 60 Hz	6 VA	120 seconds	2-Position SPDT	60 inches

Valves

Material Number	Body Pattern	Pipe Size		Pipe Connection	Capacity	Flow Characteristic	Comments
		Inch	DN				
VCZBB3100/U	Two-way	1/2 in.	DN15	NPT	3.5 Cv	Linear	Use with max 50% glycol in water solution
VCZAA3100/U	Two-way	1/2 in.	DN15	Sweat	3.5 Cv	Linear	Use with max 50% glycol in water solution
VCZAL3100/U	Two-way	3/4 in.	DN20	NPT	4.7 Cv	Linear	Use with max 50% glycol in water solution
VCZAR3100/U	Two-way	1 in.	DN25	NPT	6.6 Cv	Linear	Use with max 50% glycol in water solution
VCZAS3100/U	Two-way	1 in.	DN25	Sweat	6.6 Cv	Linear	Use with max 50% glycol in water solution
VCZBD3100/U	Two-way	1-1/4 in.	DN32	NPT	7 Cv	Linear	Use with max 50% glycol in water solution
VCZBE3100/U	Two-way	1-1/4 in.	DN32	Sweat	7 Cv	Linear	Use with max 50% glycol in water solution

V4043 Line Voltage Zone Valves

Flare Connection

Sweat Connection

NPT Connection

Two way on-off line voltage valves consist of an actuator motor and valve assembly for controlling the flow of hot or chilled water.

- Manual opener (on all models, except straight-through, normally open valves) for valve operation on power failure; valve returns to automatic position when power is restored.
- All models may be installed without disassembling the valve.
- Compact construction for easy installation.
- Complete powerhead may be removed or replaced without breaking plumbing line connections or draining the system.
- Motor may be replaced without removing the valve body or draining the system.
- Suitable for heating and cooling applications.

Application: Hydronic Control
Valve Type: Zone Valve
Body Pattern: Two-way, Straight-through
Frequency: 60 Hz
Actuation: Two position
Electrical Connections: 18 in. leads (457 mm leads)
Ambient Temperature Range: 125°F Maximum (52°C Maximum)
Fluid Temperature: 40°F to 200°F (5°C to 93°C)
Static Pressure Rating (psi): 125 psi
Static Pressure Rating (kPa): 862 kPa
Materials (Body): Brass
Materials (Seat): Brass
Materials (Stem): Stainless Steel
Materials (Plug / Ball / Disc): Buna-N (NBR) Rubber Ball
Materials (Packing): EPDM rubber
Timing: Nominal Open – 15 sec
Operating Humidity Range (% RH): 5 to 95% relative humidity, non-condensing.
Approvals, Underwriters Laboratories Inc.: UL Component Listed: File MH11826 Vol. 1
Approvals, CSA: CSA Certified: File 1322
Comments: Use this valve in closed loop hydronic systems that do not contain dissolved oxygen in system water, such as fresh water from frequent source of makeup water. Valve designed for cycling (not constantly powered on) applications.

Material Number	Capacity (Cv)	Capacity (Kv)	Pipe Size (inch)	Pipe Size (DN)	Connection Type	Maximum Differential Pressure Ratings (Close-off) (psi)	Maximum Differential Pressure Ratings (Close-off) (kPa)	De-energized Position	Valve Action	Voltage	Current Draw	Manual Opener
V4043A1002/U	3.5 Cv	3 Kv	1/2 in.	DN15	Flare	20 psi	138 kPa	Normally Closed	Spring return to close	120 Vac; Power Consumption – 9.6 VA	0.08A	Yes
V4043A1010/U	3.5 Cv	3 Kv	1/2 in.	DN15	Sweat	20 psi	138 kPa	Normally Closed	Spring return to close	120 Vac; Power Consumption – 9.6 VA	0.08A	Yes
V4043A1184/U	1 Cv	0.9 Kv	1/2 in.	DN15	Sweat	50 psi	345 kPa	Normally Closed	Spring return to close	120 Vac; Power Consumption – 9.6 VA	0.08A	Yes
V4043A1259/U	8 Cv	6.9 Kv	3/4 in.	DN20	Sweat	8 psi	55 kPa	Normally Closed	Spring return to close	120 Vac; Power Consumption – 9.6 VA	0.08A	Yes
V4043A1317/U	8 Cv	6.9 Kv	1 in.	DN25	Sweat	8 psi	55 kPa	Normally Closed	Spring return to close	120 Vac; Power Consumption – 9.6 VA	0.08A	Yes
V4043A1689/U	3.5 Cv	3 Kv	1/2 in.	DN15	NPT	20 psi	138 kPa	Normally Closed	Spring return to close	120 Vac; Power Consumption – 9.6 VA	0.08A	Yes
V4043A1697/U	10 Cv	8.6 Kv	1 in.	DN25	NPT	6.5 psi	45 kPa	Normally Closed	Spring return to close	120 Vac; Power Consumption – 9.6 VA	0.08A	Yes
V4043A1705/U	3.5 Cv	3 Kv	3/4 in.	DN20	NPT	20 psi	138 kPa	Normally Closed	Spring return to close	120 Vac; Power Consumption – 9.6 VA	0.08A	Yes
V4043B1018/U	3.5 Cv	3 Kv	1/2 in.	DN15	Sweat	20 psi	138 kPa	Normally Open	Spring return to open	120 Vac; Power Consumption – 9.6 VA	0.08A	No

Dimensions in inches (millimeters)

V4043, V8043 SWEAT COPPER CONNECTION MODELS 6

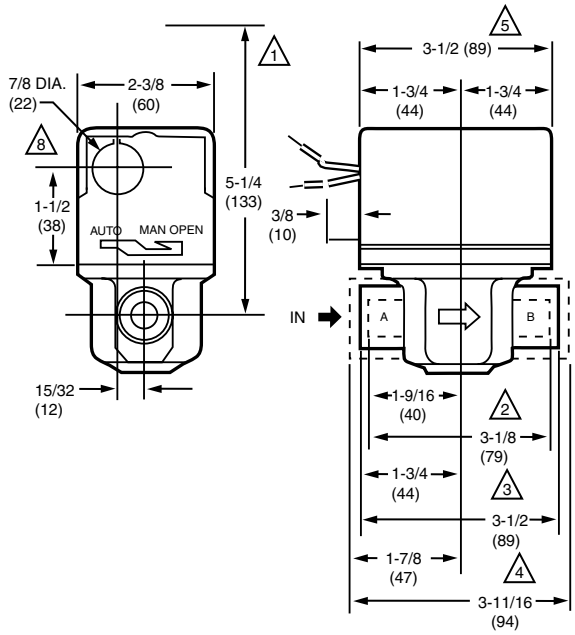

V4044, V8044 SWEAT COPPER CONNECTION MODELS

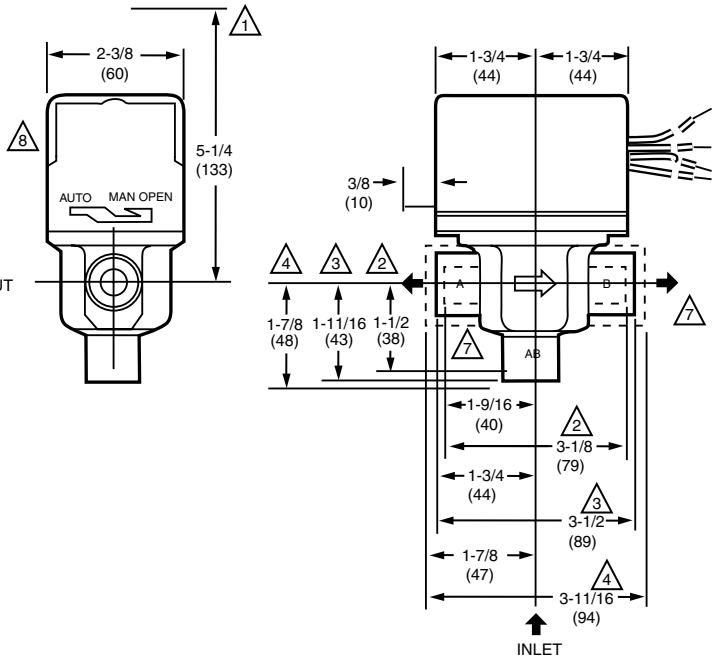

V4043, V8043 FLARE-FITTING MODELS 6

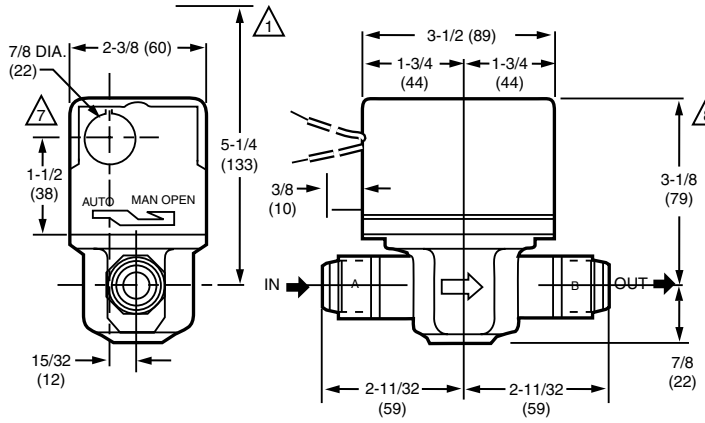

V4044, V8044 FLARE-FITTING MODELS

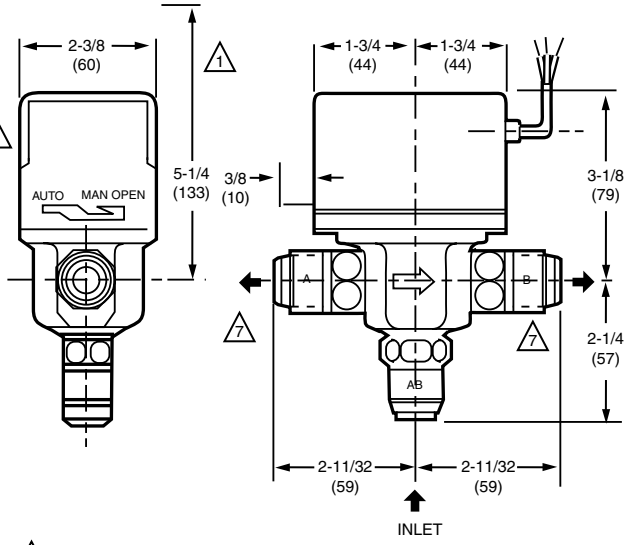

V8043 INVERTED FLARE MODELS

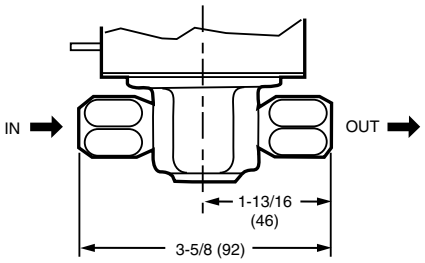

M10175

1. HEIGHT NEEDED TO REMOVE COVER.
2. DIMENSIONS FOR 1/2 IN. COPPER TUBING.
3. DIMENSIONS FOR 3/4 IN COPPER TUBING.
4. DIMENSIONS FOR 1 IN. COPPER TUBING.
5. 4-7/8 IN. (124) MAX ON V8034F WITH TERMINAL BOARD ENCLOSURE.
6. V4034B AND V8043B VALVES THAT ARE NORMALLY OPEN IN THE DE-ENERGIZED POSITION HAVE NO MANUAL LEVER. THE VALVES ALSO HAVE A REVERSED POWERHEAD WHERE THE LEADWIRES EXIT THE POWERHEAD ABOVE THE B (OUTLET) PORT RATHER THAN ABOVE THE A (INLET) PORT.
7. REFER TO MOUNTING INSTRUCTIONS.
8. OPENING FOR 1/2 IN. CONDUIT ON MANUAL LEVER SIDE FOR V4043, V8043; OPENING ON OPPOSITE SIDE FOR V4044, V8044.

V4043 Line Voltage Zone Valves for Steam

Flare Connection

Sweat Connection

Two way on-off line voltage valves consist of an actuator motor and valve assembly for controlling the flow of low pressure steam.

- Manual opener (on all models, except straight-through, normally open valves) for valve operation on power failure; valve returns to automatic position when power is restored.
- All models may be installed without disassembling the valve.
- Compact construction for easy installation.
- Complete powerhead may be removed or replaced without breaking plumbing line connections or draining the system.
- Motor may be replaced without removing the valve body or draining the system.
- Suitable for heating applications.

Application: Steam (low pressure) Control
Valve Type: Zone Valve
Pipe Size (inch): 1/2 in.
Pipe Size (DN): DN15
Body Pattern: Two-way, Straight-through
Capacity (Cv): 3.5 Cv
Capacity (Kv): 3 Kv
Frequency: 60 Hz
Actuation: Two position
Ambient Temperature Range: 125°F Maximum (52°C Maximum)
Fluid Temperature: 40°F to 240°F (5°C to 116°C)
Pressure Range (psi): Steam – 15 psi
Pressure Range (kPa): Steam – 103 kPa
Static Pressure Rating (psi): 125 psi

Static Pressure Rating (kPa): 862 kPa
Materials (Body): Brass
Materials (Seat): Brass
Materials (Stem): Stainless Steel
Materials (Plug / Ball / Disc): EPDM Rubber Ball
Materials (Packing): EPDM rubber
Timing: Nominal Open – 15 sec
Operating Humidity Range (% RH): 5 to 95% relative humidity, non-condensing.
Approvals, Underwriters Laboratories Inc.: UL Component Listed: File MH11826 Vol. 1
Approvals, CSA: CSA Certified: File 1322
Comments: For low pressure (15 psi) steam application
Dimensions in inches (millimeters). See page 219.

Material Number	Electrical Connections	Connection Type	Maximum Differential Pressure Ratings (Close-off) (psi)	Maximum Differential Pressure Ratings (Close-off) (kPa)	De-energized Position	Valve Action	Voltage	Current Draw	Manual Opener
V4043E1003/U	18 in. leads (457 mm leads)	Sweat	20 psi	138 kPa	Normally Closed	Spring return to close	120 Vac; Power Consumption – 9.6 VA	0.08A	Yes
V4043E1011/U	18 in. leads (457 mm leads)	Sweat	20 psi	138 kPa	Normally Closed	Spring return to close	208 Vac; Power Consumption – 9.6 VA	0.04A	Yes
V4043E1029/U	18 in. leads (457 mm leads)	Sweat	20 psi	138 kPa	Normally Closed	Spring return to close	240 Vac; Power Consumption – 9.6 VA	0.04A	Yes

V4044 Line Voltage Diverting Valves

Flare Connection

Sweat Connection

On-off and diverting line voltage valves consist of an actuator motor and valve assembly for controlling the flow of hot or chilled water.

- Manual opener (on all models, except straight-through, normally open valves) for valve operation on power failure; valve returns to automatic position when power is restored.
- All models may be installed without disassembling the valve.
- Compact construction for easy installation.
- Complete powerhead may be removed or replaced without breaking plumbing line connections or draining the system.
- Motor may be replaced without removing the valve body or draining the system.
- Suitable for heating and cooling applications.

Application: Hydronic Control
Valve Type: Zone Valve
Body Pattern: Three-way, Diverting
Valve Action: Spring Return to port A
Voltage: 120 Vac; Power Consumption – 9.6 VA
Frequency: 60 Hz
Actuation: Two position
De-energized Position: Port A Normally Closed
Electrical Connections: 18 in. leads (457 mm leads)
Ambient Temperature Range: 125°F Maximum (52°C Maximum)
Fluid Temperature: 40°F to 200°F (5°C to 93°C)
Static Pressure Rating (psi): 125 psi
Static Pressure Rating (kPa): 862 kPa
Materials (Body): Brass
Materials (Seat): Brass

Materials (Stem): Stainless Steel
Materials (Plug / Ball / Disc): Buna-N (NBR) Rubber Ball
Materials (Packing): EPDM rubber
Timing: Nominal Open – 30 sec
Operating Humidity Range (% RH): 5 to 95% relative humidity, non-condensing.
Manual Opener: Yes
Approvals, Underwriters Laboratories Inc.: UL Component Listed: File MH11826 Vol. 1
Comments: Use this valve in closed loop hydronic systems that do not contain dissolved oxygen in system water, such as fresh water from frequent source of makeup water. Valve designed for cycling (not constantly powered on) applications.
Current Draw: 0.08A
Dimensions in inches (millimeters). See page 219.

Material Number	Capacity (Cv)	Capacity (Kv)	Pipe Size (inch)	Pipe Size (DN)	Connection Type	Maximum Differential Pressure Ratings (Close-off) (psi)	Maximum Differential Pressure Ratings (Close-off) (kPa)	Changeover Aquastat
V4044A1001/U	4 Cv	3.4 Kv	1/2 in.	DN15	Flare	20 psi	138 kPa	
V4044A1019/U	4 Cv	3.4 Kv	1/2 in.	DN15	Sweat	20 psi	138 kPa	
V4044A1191/U	7.0 Cv	6 Kv	3/4 in.	DN20	Sweat	10 psi	69 kPa	
V4044B1017/U	4 Cv	3.4 Kv	1/2 in.	DN15	Sweat	20 psi	138 kPa	Yes, SPDT

V8043 Low Voltage Normally Closed Zone Valves

Flare Connection

Sweat Connection

NPT Connection

Sweat Connection with terminal block

Inverted Flare

Two-way on-off low voltage valves consist of an actuator and valve assembly for controlling the flow of hot water.

- Manual opener (on all models, except straight-through, normally open valves) for valve operation on power failure; valve returns to automatic position when power is restored.
- All models may be installed without disassembling the valve.
- Compact construction for easy installation.
- Complete powerhead may be removed or replaced without breaking plumbing line connections or draining the system.
- Actuator motor may be replaced without removing the valve body or draining the system.

Application: Hydronic Control
Valve Type: Zone Valve
Body Pattern: Two-way, Straight-through
Valve Action: Spring return to close
Voltage: 24 Vac; Power Consumption – 7.7 VA
Frequency: 50 Hz; 60 Hz
Actuation: Two position
De-energized Postion: Two position
Ambient Temperature Range: 125°F Maximum (52°C Maximum)
Fluid Temperature: 50°F to 200°F (10°C to 93°C)
Static Pressure Rating (psi): 125 psi
Static Pressure Rating (kPa): 862 kPa
Materials (Body): Brass
Materials (Seat): Brass
Materials (Stem): Stainless Steel
Materials (Plug / Ball / Disc): Buna-N (NBR) Rubber Ball
Materials (Packing): EPDM rubber
Timing: Nominal Open – 15 sec
Operating Humidity Range (% RH): 5 to 95% relative humidity, non-condensing.
Manual Opener: Yes
Approvals, Underwriters Laboratories Inc.: UL Listed: File MH11826
Approvals, CSA: CSA Certified: File 1322
Comments: Use this valve in closed loop hydronic systems that do not contain dissolved oxygen in system water, such as fresh water from frequent source of makeup water. Valve designed for cycling (not constantly powered on) applications.
Current Draw: 0.32A
Dimensions in inches (millimeters). See page 219.

Replacement Parts:
802360JA/U – 24V Replacement motor for V8043/44
802360UA/U – 24V, 50/60 Hz Replacement motor for steam and heating Zone Valves

Material Number	Capacity (Cv)	Capacity (Kv)	Pipe Size (inch)	Pipe Size (DN)	Connection Type	Maximum Differential Pressure Ratings (Close-off) (psi)	Maximum Differential Pressure Ratings (Close-off) (kPa)	End Switch Rating	Electrical Connections	Auxiliary End Switch
V8043A1003/U	3.5 Cv	3 Kv	1/2 in.	DN15	Flare	20 psi	138 kPa		18 in. (457 mm) leads	
V8043A1011/U	3.5 Cv	3 Kv	1/2 in.	DN15	Sweat	20 psi	138 kPa		18 in. (457 mm) leads	
V8043A1029/U	3.5 Cv	3 Kv	3/4 in.	DN20	Sweat	20 psi	138 kPa		18 in. (457 mm) leads	
V8043A1037/U	3.5 Cv	3 Kv	1 in.	DN25	Sweat	20 psi	138 kPa		18 in. (457 mm) leads	
V8043A1185/U	8 Cv	6.9 Kv	3/4 in.	DN20	Sweat	8 psi	55 kPa		18 in. (457 mm) leads	
V8043A1219/U	3.5 Cv	3 Kv	1/2 in.	DN15	Sweat	20 psi	138 kPa		18 in. (457 mm) leads	
V8043A1227/U	3.5 Cv	3 Kv	1/2 in.	DN15	NPT	20 psi	138 kPa		18 in. (457 mm) leads	
V8043E1004/U	3.5 Cv	3 Kv	1/2 in.	DN15	Sweat	20 psi	138 kPa	50 VA pilot duty @ 24 V; 4.4 A running with 26.4 A inrush @ 120 V	18 in. (457 mm) leads	N.O. SPST
V8043E1012/U	3.5 Cv	3 Kv	3/4 in.	DN20	Sweat	20 psi	138 kPa	50 VA pilot duty @ 24 V; 4.4 A running with 26.4 A inrush @ 120 V	18 in. (457 mm) leads	N.O. SPST
V8043E1020/U	3.5 Cv	3 Kv	1 in.	DN25	Sweat	20 psi	138 kPa	50 VA pilot duty @ 24 V; 4.4 A running with 26.4 A inrush @ 120 V	18 in. (457 mm) leads	N.O. SPST
V8043E1061/U	8 Cv	6.9 Kv	3/4 in.	DN20	Sweat	8 psi	55 kPa	50 VA pilot duty @ 24 V; 4.4 A running with 26.4 A inrush @ 120 V	18 in. (457 mm) leads	N.O. SPST

Material Number	Capacity (Cv)	Capacity (Kv)	Pipe Size (inch)	Pipe Size (DN)	Connection Type	Maximum Differential Pressure Ratings (Close-off) (psi)	Maximum Differential Pressure Ratings (Close-off) (kPa)	End Switch Rating	Electrical Connections	Auxiliary End Switch
V8043E1079/U	8 Cv	6.9 Kv	1 in.	DN25	Sweat	8 psi	55 kPa	50 VA pilot duty @ 24 V; 4.4 A running with 26.4 A inrush @ 120 V	18 in. (457 mm) leads	N.O. SPST
V8043E1137/U	10 Cv	8.6 Kv	1 in.	DN25	NPT	6.5 psi	45 kPa	50 VA pilot duty @ 24 V; 4.4 A running with 26.4 A inrush @ 120 V	18 in. (457 mm) leads	N.O. SPST
V8043E1145/U	3.5 Cv	3 Kv	3/4 in.	DN20	NPT	20 psi	138 kPa	50 VA pilot duty @ 24 V; 4.4 A running with 26.4 A inrush @ 120 V	18 in. (457 mm) leads	N.O. SPST
V8043F1028/U	3.5 Cv	3 Kv	1/2 in.	DN15	Sweat	20 psi	138 kPa	50 VA pilot duty @ 24 V; 4.4 A running with 26.4 A inrush @ 120 V	screw terminal block	N.O. SPST
V8043F1036/U	3.5 Cv	3 Kv	3/4 in.	DN20	Sweat	20 psi	138 kPa	50 VA pilot duty @ 24 V; 4.4 A running with 26.4 A inrush @ 120 V	screw terminal block	N.O. SPST
V8043F1051/U	3.5 Cv	3 Kv	1 in.	DN25	Sweat	20 psi	138 kPa	50 VA pilot duty @ 24 V; 4.4 A running with 26.4 A inrush @ 120 V	screw terminal block	N.O. SPST
V8043F1093/U	8 Cv	6.9 Kv	3/4 in.	DN20	Sweat	8 psi	55 kPa	50 VA pilot duty @ 24 V; 4.4 A running with 26.4 A inrush @ 120 V	screw terminal block	N.O. SPST
V8043F1101/U	8 Cv	6.9 Kv	1 in.	DN25	Sweat	8 psi	55 kPa	50 VA pilot duty @ 24 V; 4.4 A running with 26.4 A inrush @ 120 V	screw terminal block	N.O. SPST

V8043 Low Voltage Normally Closed Zone Valves for Canada

Flare Connection

Sweat Connection

NPT Connection

Sweat Connection with terminal block

Inverted Flare

Two-way on-off low voltage valves consist of an actuator and valve assembly for controlling the flow of hot water.

- Manual opener (on all models, except straight-through, normally open valves) for valve operation on power failure; valve returns to automatic position when power is restored.
- All models may be installed without disassembling the valve.
- Compact construction for easy installation.
- Complete powerhead may be removed or replaced without breaking plumbing line connections or draining the system.
- Actuator motor may be replaced without removing the valve body or draining the system.

Application: Hydronic Control
Valve Type: Zone Valve
Body Pattern: Two-way, Straight-through
Valve Action: Spring return to close
Voltage: 24 Vac; Power Consumption – 7.7 VA
Actuation: Two position
De-energized Position: Normally Closed
Electrical Connections: 18 in. (457 mm) leads (except for V8043F1135/U which has screw terminals)
Ambient Temperature Range: 125°F Maximum (52°C Maximum)
Fluid Temperature: 50°F to 200°F (10°C to 93°C)

Materials (Body): Brass
Materials (Seat): Brass
Materials (Stem): Stainless Steel
Materials (Plug / Ball / Disc): Buna-N (NBR) Rubber Ball
Materials (Packing): EPDM rubber
Timing: Nominal Open – 15 sec
Operating Humidity Range (% RH): 5 to 95% relative humidity, non-condensing.
Manual Opener: Yes
Approvals, Underwriters Laboratories Inc.: UL Listed: File MH11826
Approvals, CSA: CSA Certified: File 1322
Comments: Use this valve in closed loop hydronic systems that do not contain dissolved oxygen in system water, such as fresh water from frequent source of makeup water. Valve designed for cycling (not constantly powered on) applications.
Current Draw: 0.32A
Dimensions in inches (millimeters). See page 219.

Replacement Parts:
802360JA/U – 24V Replacement motor for V8043/44
802360UA/U – 24V, 50/60 Hz Replacement motor for steam and heating Zone Valves

Material Number	Pipe Size (inch)	Pipe Size (DN)	Connection Type	Frequency	Capacity (Cv)	Capacity (Kv)	Auxiliary End Switch	Maximum Differential Pressure Ratings Closeoff (psi [kPa])	Static Pressure Rating (psi [kPa])	End Switch Rating	Includes
V8043C1033/U	3/8 in.	DN10	Flare	50 Hz; 60 Hz	3.5 Cv	3 Kv		20 psi (138 kPa)	125 psi (862 kPa)		With 2 straight 3/4 in. sweat adapters.
V8043C1058/U	3/4 in.	DN20	Sweat	50 Hz; 60 Hz	3.5 Cv	3 Kv		20 psi (138 kPa)	125 psi (862 kPa)		
V8043C1066/U	1 in.	DN25	Sweat	50 Hz; 60 Hz	3.5 Cv	3 Kv		20 psi (138 kPa)	125 psi (862 kPa)		
V8043C1116/U	3/8 in.	DN10	Flare	50 Hz; 60 Hz	3.5 Cv	3 Kv		20 psi (138 kPa)	125 psi (862 kPa)		Less Adapters
V8043C1124/U	1/2 in.	DN15	Inverted Flare	50 Hz; 60 Hz	3.5 Cv	3 Kv		20 psi (138 kPa)	125 psi (862 kPa)		Less Adapters
V8043C3302/U	3/8 in.	DN10	Flare	50 Hz; 60 Hz	3.5 Cv	3 Kv		20 psi (138 kPa)	300 psi (2068 kPa)		With 2 straight 3/4 in. sweat adapters.
V8043C3310/U	1/2 in.	DN15	Inverted Flare	60 Hz	3.5 Cv	3 Kv		20 psi (138 kPa)	300 psi (2068 kPa)		Less Adapters
V8043F1135/U	3/4 in.	DN20	Sweat	50 Hz; 60 Hz	3.5 Cv	3 Kv	N.O. SPST	20 psi (138 kPa)	125 psi (862 kPa)	50 VA pilot duty @ 24 V; 4.4 A running with 26.4 A inrush @ 120 V	End Switch enclosure.
V8043G1000/U	1/2 in.	DN15	Sweat	50 Hz; 60 Hz	3.5 Cv	3 Kv	N.O. SPST	20 psi (138 kPa)	125 psi (862 kPa)	50 VA pilot duty @ 24 V; 4.4 A running with 26.4 A inrush @ 120 V	
V8043G1018/U	3/4 in.	DN20	Sweat	50 Hz; 60 Hz	3.5 Cv	3 Kv	N.O. SPST	20 psi (138 kPa)	125 psi (862 kPa)	50 VA pilot duty @ 24 V; 4.4 A running with 26.4 A inrush @ 120 V	

Material Number	Pipe Size (inch)	Pipe Size (DN)	Connection Type	Frequency	Capacity (Cv)	Capacity (Kv)	Auxiliary End Switch	Maximum Differential Pressure Ratings Closeoff (psi [kPa])	Static Pressure Rating (psi [kPa])	End Switch Rating	Includes
V8043G1026/U	1 in.	DN25	Sweat	50 Hz; 60 Hz	3.5 Cv	3 Kv	N.O. SPST	20 psi (138 kPa)	125 psi (862 kPa)	50 VA pilot duty @ 24 V; 4.4 A running with 26.4 A inrush @ 120 V	
V8043G1034/U	3/8 in.	DN10	Flare	50 Hz; 60 Hz	3.5 Cv	3 Kv	N.O. SPST	20 psi (138 kPa)	125 psi (862 kPa)	50 VA pilot duty @ 24 V; 4.4 A running with 26.4 A inrush @ 120 V	With 2 straight 3/4 in. sweat adapters.
V8043G1109/U	3/4 in.	DN20	NPT	50 Hz; 60 Hz	3.5 Cv	3 Kv	N.O. SPST	20 psi (138 kPa)	125 psi (862 kPa)	50 VA pilot duty @ 24 V; 4.4 A running with 26.4 A inrush @ 120 V	
V8043G1125/U	1/2 in.	DN15	Inverted Flare	50 Hz; 60 Hz	3.5 Cv	3 Kv	N.O. SPST	20 psi (138 kPa)	125 psi (862 kPa)	50 VA pilot duty @ 24 V; 4.4 A running with 26.4 A inrush @ 120 V	Less Adapters
V8043G1133/U	3/8 in.	DN10	Flare	50 Hz; 60 Hz	3.5 Cv	3 Kv	N.O. SPST	20 psi (138 kPa)	125 psi (862 kPa)	50 VA pilot duty @ 24 V; 4.4 A running with 26.4 A inrush @ 120 V	Less Adapters
V8043G1158/U	1 in.	DN25	Sweat	50 Hz; 60 Hz	8 Cv	6.9 Kv	N.O. SPST	8 psi (55 kPa)	125 psi (862 kPa)	50 VA pilot duty @ 24 V; 4.4 A running with 26.4 A inrush @ 120 V	
V8043G1182/U	1 in.	DN25	NPT	50 Hz; 60 Hz	10 Cv	8.5 Kv	N.O. SPST	6.5 psi (45 kPa)	125 psi (862 kPa)	50 VA pilot duty @ 24 V; 4.4 A running with 26.4 A inrush @ 120 V	
V8043G1216/U	3/4 in.	DN20	Sweat	60 Hz	3.5 Cv	3 Kv	N.O. SPST	20 psi (138 kPa)	125 psi (862 kPa)	50 VA pilot duty @ 24 V; 4.4 A running with 26.4 A inrush @ 120 V	
V8043G3311/U	1/2 in.	DN15	Inverted Flare	60 Hz	3.5 Cv	3 Kv	N.O. SPST	20 psi (138 kPa)	300 psi (2068 kPa)	50 VA pilot duty @ 24 V; 4.4 A running with 26.4 A inrush @ 120 V	Less Adapters

V8043 Low Voltage Normally Open Valves for Steam

NPT Connection

On-off and two way low voltage valves consist of an actuator and valve assembly for controlling the flow of low pressure steam.

- All models may be installed without disassembling the valve.
- Compact construction for easy installation.
- Complete powerhead may be removed or replaced without breaking plumbing line connections or draining the system.
- Actuator motor may be replaced without removing the valve body or draining the system.
- Suitable for use 15 psi low pressure steam application.

Application: Steam (low pressure) Control
Valve Type: Zone Valve
Body Pattern: Two-way, Straight-through
Valve Action: Spring return to open
Voltage: 24 Vac; Power Consumption – 7.7 VA
Frequency: 50 Hz; 60 Hz
Actuation: Two position
Electrical Connections: 18 in. leads (457 mm leads)
Ambient Temperature Range: 125°F Maximum (52°C Maximum)
Fluid Temperature: 50°F to 240°F (10°C to 116°C)
Static Pressure Rating (psi): 125 psi
Static Pressure Rating (kPa): 862 kPa
Materials (Body): Brass
Materials (Seat): Brass
Materials (Stem): Stainless Steel
Materials (Plug / Ball / Disc): EPDM Rubber Ball
Materials (Packing): EPDM rubber
Timing: Nominal Open – 15 sec
Operating Humidity Range (% RH): 5 to 95% relative humidity, non-condensing.
Approximate, Dimensions: 4 in. high x 3 23/32 in. wide x 2 3/8 in. deep (102 mm high x 94 mm wide x 60 mm deep)
Approvals, Underwriters Laboratories Inc.: UL Component Listed: File MH11826 Vol. 1
Comments: For low pressure (15 psi) steam application
Dimensions in inches (millimeters). See page 219.

Material Number	Capacity (Cv)	Capacity (Kv)	Pipe Size (inch)	Pipe Size (DN)	Connection Type	Maximum Differential Pressure Ratings (Close-off) (psi)	Maximum Differential Pressure Ratings (Close-off) (kPa)	De-energized Position	Current Draw	Manual Opener
V8043J1029/U	3.5 Cv	3 Kv	1/2 in.	DN15	NPT	20 psi	138 kPa	Normally Open	0.42A	No
V8043J1037/U	3.5 Cv	3 Kv	3/4 in.	DN20	NPT	20 psi	138 kPa	Normally Open	0.42A	No

V8043 Low Voltage Normally Open Zone Valves

Sweat Connection

Inverted Flare

Flare Connection

NPT Connection

On-off and two-way low voltage valves consist of an actuator and valve assembly for controlling the flow of hot water.

- All models may be installed without disassembling the valve.
- Compact construction for easy installation.
- Complete powerhead may be removed or replaced without breaking plumbing line connections or draining the system.
- Actuator motor may be replaced without removing the valve body or draining the system.
- No Manual opener

Application: Hydronic Control
Valve Type: Zone Valve
Body Pattern: Two-way, Straight-through
Valve Action: Spring return to open
Voltage: 24 Vac; Power Consumption – 7.7 VA
Capacity (Cv): 3.5 Cv
Capacity (Kv): 3 Kv
Actuation: Two position
De-energized Position: Normally Open
Electrical Connections: 18 in. leads (457 mm leads)
Ambient Temperature Range: 125°F Maximum (52°C Maximum)
Fluid Temperature: 40°F to 200°F (5°C to 93°C)
Maximum Differential Pressure Ratings (Close-off) (psi): 20 psi
Maximum Differential Pressure Ratings (Close-off) (kPa): 138 kPa
Static Pressure Rating (psi): 125 psi
Static Pressure Rating (kPa): 862 kPa
Materials (Body): Brass
Materials (Seat): Brass
Materials (Stem): Stainless Steel
Materials (Plug / Ball / Disc): Buna-N (NBR) Rubber Ball
Materials (Packing): EPDM rubber
Timing: Nominal Open – 15 sec
Operating Humidity Range (% RH): 5 to 95% relative humidity, non-condensing.
Manual Opener: No
Approvals, Underwriters Laboratories Inc.: UL Component Listed: File MH11826 Vol. 1
Approvals, CSA: CSA Certified: File 1322
Comments: Use this valve in closed loop hydronic systems that do not contain dissolved oxygen in system water, such as fresh water from frequent source of makeup water. Valve designed for cycling (not constantly powered on) applications.
Current Draw: 0.32A
Dimensions in inches (millimeters). See page 219.

Material Number	Pipe Size (inch)	Pipe Size (DN)	Connection Type	Frequency	Auxiliary End Switch	End Switch Rating	Includes
V8043B1019/U	1/2 in.	DN15	Sweat	60 Hz			
V8043B1027/U	3/4 in.	DN20	Sweat	60 Hz			
V8043B1076/U	3/4 in.	DN20	NPT	50 Hz; 60 Hz			
V8043D1031/U	3/4 in.	DN20	NPT	50 Hz; 60 Hz			
V8043D1049/U	3/4 in.	DN20	Sweat	50 Hz; 60 Hz			With 1/16 in. bypass hole
V8043D1064/U	3/4 in.	DN20	Sweat	50 Hz; 60 Hz			
V8043D1080/U	3/8 in.	DN10	Flare	50 Hz; 60 Hz			With 2 straight 3/4 in. sweat adapters.
V8043D1156/U	1/2 in.	DN15	Sweat	50 Hz; 60 Hz			
V8043D1197/U	3/8 in.	DN10	Flare	50 Hz; 60 Hz			Less Adapters Order separately - 272704A (1/2 in. sweat), 272704B (3/4 in. sweat)
V8043D1205/U	1/2 in.	DN15	Inverted Flare	50 Hz; 60 Hz			Less Adapters Order separately - 272704A (1/2 in. sweat), 272704B (3/4 in. sweat)
V8043D1239/U	1/2 in.	DN15	Inverted Flare	50 Hz; 60 Hz	N.C. SPST	2.2 A @ 120Vac 60Hz	Less Adapters

V8043 Low Voltage Series 5000 QuickFit® Zone Valves

Two-way on-off low voltage valves consist of an actuator and valve assembly for controlling the flow of hot water.

- All models may be installed without disassembling the valve.
- Compact construction for easy installation.
- Manual opener (on all models, except straight-through, normally open valves) for valve operation on power failure; valve returns to automatic position when power is restored.
- Complete powerhead may be removed or replaced without breaking plumbing line connections or draining the system.
- "Quick Fit" pushbutton powerhead makes it easy to remove for service.
- Series 5000 replacement powerhead is backward compatible with series 1000 zone valves.
- Innovative motor technology offers silent operation, water hammer resist and longer life.

Application: Hydronic Control
Valve Type: Zone Valve
Body Pattern: Two-way, Straight-through
Valve Action: Spring return to close
Connection Type: Sweat
Voltage: 24 Vac; Power Consumption – 7.2 VA
Frequency: 60 Hz
Actuation: Two position
De-energized Position: Normally Closed
Ambient Temperature Range: 125°F Maximum (52°C Maximum)
Fluid Temperature: 50°F to 200°F (10°C to 93°C)
Static Pressure Rating (psi): 300 psi
Static Pressure Rating (kPa): 2068 kPa
Materials (Body): Brass
Materials (Seat): Brass
Materials (Stem): Stainless Steel
Materials (Plug / Ball / Disc): Buna-N (NBR) Rubber Ball
Materials (Packing): EPDM rubber
Timing: Nominal Open – 15 sec
Operating Humidity Range (% RH): 5 to 95% relative humidity, non-condensing.
Manual Opener: Yes
Approvals, CSA: CSA Certified: File 1322
Comments: Use this valve in closed loop hydronic systems that do not contain dissolved oxygen in system water, such as fresh water from frequent source of makeup water. Valve designed for cycling (not constantly powered on) applications.
Current Draw: 0.32A

Dimensions in inches (millimeters)

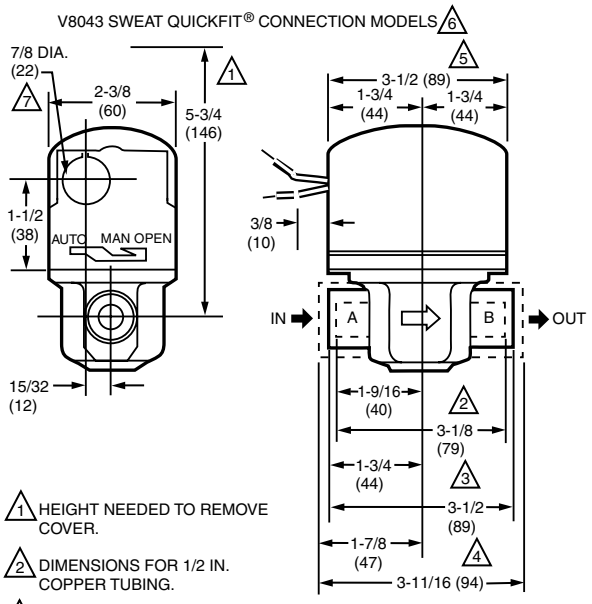

1 HEIGHT NEEDED TO REMOVE COVER.

2 DIMENSIONS FOR 1/2 IN. COPPER TUBING.

3 DIMENSIONS FOR 3/4 IN COPPER TUBING.

4 DIMENSIONS FOR 1 IN. COPPER TUBING.

5 4-7/8 IN. (124) MAX ON V8034F WITH TERMINAL BOARD ENCLOSURE.

6 V8043B VALVES THAT ARE NORMALLY OPEN IN THE DE-ENERGIZED POSITION HAVE NO MANUAL LEVER. THE VALVES ALSO HAVE A REVERSED POWERHEAD WHERE THE LEADWIRES EXIT THE POWERHEAD ABOVE THE B (OUTLET) PORT RATHER THAN ABOVE THE A (INLET) PORT.

7 OPENING FOR 1/2 IN. CONDUIT ON MANUAL LEVER SIDE FOR V8043

M23257

Material Number	Capacity (Cv)	Capacity (Kv)	Pipe Size (inch)	Pipe Size (DN)	Auxiliary End Switch	Electrical Connections	End Switch Rating	Maximum Differential Pressure Ratings (Close-off) (psi)	Maximum Differential Pressure Ratings (Close-off) (kPa)
V8043A5029/U	3.5 Cv	3 Kv	3/4 in.	DN20		18 in. (457 mm) leads		20 psi	138 kPa
V8043E5004/U	3.5 Cv	3 Kv	1/2 in.	DN15	N.O. SPST	18 in. (457 mm) leads	50 VA pilot duty @ 24 V; 4.4 A running with 26.4 A inrush @ 120 V	20 psi	138 kPa
V8043E5012/U	3.5 Cv	3 Kv	3/4 in.	DN20	N.O. SPST	18 in. (457 mm) leads	50 VA pilot duty @ 24 V; 4.4 A running with 26.4 A inrush @ 120 V	20 psi	138 kPa
V8043E5020/U	3.5 Cv	3 Kv	1 in.	DN25	N.O. SPST	18 in. (457 mm) leads	50 VA pilot duty @ 24 V; 4.4 A running with 26.4 A inrush @ 120 V	20 psi	138 kPa
V8043E5061/U	8 Cv	6.9 Kv	3/4 in.	DN20	N.O. SPST	18 in. (457 mm) leads	50 VA pilot duty @ 24 V; 4.4 A running with 26.4 A inrush @ 120 V	8 psi	55 kPa
V8043E5079/U	8 Cv	6.9 Kv	1 in.	DN25	N.O. SPST	18 in. (457 mm) leads	50 VA pilot duty @ 24 V; 4.4 A running with 26.4 A inrush @ 120 V	8 psi	55 kPa
V8043F5036/U	3.5 Cv	3 Kv	3/4 in.	DN20	N.O. SPST	screw terminal block	50 VA pilot duty @ 24 V; 4.4 A running with 26.4 A inrush @ 120 V	20 psi	138 kPa
V8043F5051/U	3.5 Cv	3 Kv	1 in.	DN25	N.O. SPST	screw terminal block	50 VA pilot duty @ 24 V; 4.4 A running with 26.4 A inrush @ 120 V	20 psi	138 kPa
V8043F5093/U	8 Cv	6.9 Kv	3/4 in.	DN20	N.O. SPST	screw terminal block	50 VA pilot duty @ 24 V; 4.4 A running with 26.4 A inrush @ 120 V	8 psi	55 kPa

V8043 Low Voltage Series 5000 QuickFit® Zone Valves for Canada

Flare Connection

Inverted Flare

Dimensions in inches (millimeters)

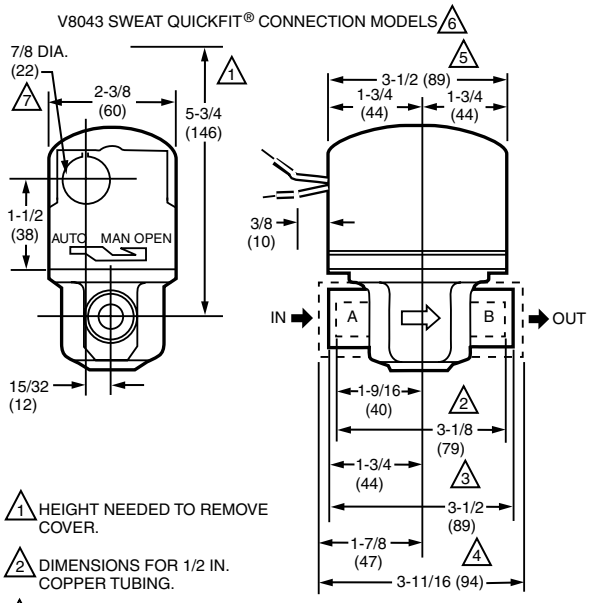

1 HEIGHT NEEDED TO REMOVE COVER.

2 DIMENSIONS FOR 1/2 IN. COPPER TUBING.

3 DIMENSIONS FOR 3/4 IN COPPER TUBING.

4 DIMENSIONS FOR 1 IN. COPPER TUBING.

5 4-7/8 IN. (124) MAX ON V8034F WITH TERMINAL BOARD ENCLOSURE.

6 V8043B VALVES THAT ARE NORMALLY OPEN IN THE DE-ENERGIZED POSITION HAVE NO MANUAL LEVER. THE VALVES ALSO HAVE A REVERSED POWERHEAD WHERE THE LEADWIRES EXIT THE POWERHEAD ABOVE THE B (OUTLET) PORT RATHER THAN ABOVE THE A (INLET) PORT.

7 OPENING FOR 1/2 IN. CONDUIT ON MANUAL LEVER SIDE FOR V8043

M23257

Two-way on-off low voltage valves consist of an actuator and valve assembly for controlling the flow of hot water.

- All models may be installed without disassembling the valve.
- Compact construction for easy installation.
- Manual opener (on all models, except straight-through, normally open valves) for valve operation on power failure; valve returns to automatic position when power is restored.
- Complete powerhead may be removed or replaced without breaking plumbing line connections or draining the system.
- "Quick Fit" pushbutton powerhead makes it easy to remove for service.
- Series 5000 replacement powerhead is backward compatible with series 1000 zone valves.
- Innovative motor technology offers silent operation, water hammer resist and longer life.

Application: Hydronic Control
Valve Type: Zone Valve
Body Pattern: Two-way, Straight-through
Valve Action: Spring return to close
Voltage: 24 Vac; Power Consumption – 7.2 VA
Frequency: 50 Hz; 60 Hz
Capacity (Cv): 3.5 Cv
Capacity (Kv): 3 Kv
Actuation: Two position
De-energized Position: Normally Closed
Auxiliary End Switch: N.O. SPST
Ambient Temperature Range: 125°F Maximum (52°C Maximum)
Fluid Temperature: 50°F to 200°F (10°C to 93°C)
Maximum Differential Pressure Ratings (Close-off) (psi): 20 psi
Maximum Differential Pressure Ratings (Close-off) (kPa): 138 kPa
Static Pressure Rating (psi): 300 psi
Static Pressure Rating (kPa): 2068 kPa
Materials (Body): Brass
Materials (Seat): Brass
Materials (Stem): Stainless Steel
Materials (Plug / Ball / Disc): Buna-N (NBR) Rubber Ball
Materials (Packing): EPDM rubber
Timing: Nominal Open – 15 sec
Operating Humidity Range (% RH): 5 to 95% relative humidity, non-condensing.
End Switch Rating: 50 VA pilot duty @ 24 V; 4.4 A running with 26.4 A inrush @ 120 V
Manual Opener: Yes
Approvals, CSA: CSA Certified: File 1322
Comments: Use this valve in closed loop hydronic systems that do not contain dissolved oxygen in system water, such as fresh water from frequent source of makeup water. Valve designed for cycling (not constantly powered on) applications.
Current Draw: 0.32A

Material Number	Pipe Size (inch)	Pipe Size (DN)	Connection Type	Includes
V8043C5058/U	3/4 in.	DN20	Sweat	
V8043G5000/U	1/2 in.	DN15	Sweat	
V8043G5018/U	3/4 in.	DN20	Sweat	
V8043G5034/U	3/8 in.	DN10	Flare	With 2 straight 3/4 in. sweat adapters.
V8043G5125/U	1/2 in.	DN15	Inverted Flare	Less Adapters

V8044 Low Voltage Diverting Valves

Flare Connection

Sweat Connection

NPT Connection

Inverted Flare

On-off and diverting low voltage valves consist of an actuator and valve assembly for controlling the flow of hot water.

- Manual opener (on all models, except straight-through, normally open valves) for valve operation on power failure; valve returns to automatic position when power is restored.
- All models may be installed without disassembling the valve.
- Compact construction for easy installation.
- Complete powerhead may be removed or replaced without breaking plumbing line connections or draining the system.
- Actuator motor may be replaced without removing the valve body or draining the system.

Application: Hydronic Control
Valve Type: Zone Valve
Body Pattern: Three-way, Diverting
Valve Action: Spring Return
Voltage: 24 Vac; Power Consumption – 7.7 VA
Frequency: 50 Hz; 60 Hz
Actuation: Two position
De-energized Position: Port A Normally Closed
Electrical Connections: 18 in. leads (457 mm leads)
Ambient Temperature Range: 125°F Maximum (52°C Maximum)
Fluid Temperature: 40°F to 200°F (5°C to 93°C)
Static Pressure Rating (psi): 125 psi
Static Pressure Rating (kPa): 862 kPa
Materials (Body): Brass
Materials (Seat): Brass
Materials (Stem): Stainless Steel
Materials (Plug / Ball / Disc): Buna-N (NBR) Rubber Ball
Materials (Packing): EPDM rubber
Timing: Nominal Open – 30 sec
Operating Humidity Range (% RH): 5 to 95% relative humidity, non-condensing.
Manual Opener: Yes
Approvals, Underwriters Laboratories Inc.: UL Component Listed: File MH11826 Vol. 1
Approvals, CSA: CSA Certified: File 1322
Comments: Use this valve in closed loop hydronic systems that do not contain dissolved oxygen in system water, such as fresh water from frequent source of makeup water. Valve designed for cycling (not constantly powered on) applications.
Current Draw: 0.32A
Dimensions in inches (millimeters). See page 219.

Material Number	Capacity (Cv)	Capacity (Kv)	Pipe Size (inch)	Pipe Size (DN)	Connection Type	Maximum Differential Pressure Ratings (Close-off) (psi)	Maximum Differential Pressure Ratings (Close-off) (kPa)	Auxiliary End Switch	End Switch Rating	Includes
V8044A1002/U	4 Cv	3.4 Kv	1/2 in.	DN15	Flare	20 psi	138 kPa			
V8044A1010/U	4 Cv	3.4 Kv	1/2 in.	DN15	Sweat	20 psi	138 kPa			
V8044A1044/U	7.0 Cv	6 Kv	3/4 in.	DN20	Sweat	10 psi	69 kPa			
V8044A1135/U	4 Cv	3.4 Kv	1/2 in.	DN15	NPT	20 psi	138 kPa			
V8044A1143/U	4 Cv	3.4 Kv	3/4 in.	DN20	NPT	20 psi	138 kPa			
V8044E1003/U	4 Cv	3.4 Kv	1/2 in.	DN15	Sweat	20 psi	138 kPa	N.O. SPST	50 VA pilot duty @ 24 V; 4.4 A running with 26.4 A inrush @ 120 V	
V8044E1011/U	7.0 Cv	6 Kv	3/4 in.	DN20	Sweat	10 psi	69 kPa	N.O. SPST	50 VA pilot duty @ 24 V; 4.4 A running with 26.4 A inrush @ 120 V	
V8044E1078/U	3.5 Cv	3 Kv	1/2 in.	DN15	Inverted Flare	20 psi	138 kPa	N.C. SPST	50 VA pilot duty @ 24 V; 4.4 A running with 26.4 A inrush @ 120 V	With normally closed SPST end switch.

Y496 Zone Control Builder Packs

Material Number	Application	Y-Pack Includes	Mounting
Y496A1074/U	Single Stage Heating Only	V8043E1012, T822K1018	Thermostat – Vertical
Y496A1082/U	Single Stage Heating Only	V8043E1004, T822K1018	Thermostat – Vertical
Y496A1090/U	Single Stage Heating Only	V8043E1061, T822K1018	Thermostat – Vertical
Y496B1024/U	Single Stage Heating/ Cooling	V8043E1012, T87K1007	Thermostat – Round
Y496B1040/U	Single Stage Heating/ Cooling	V8043F1036, T87K1007	Thermostat – Round

Contain devices necessary for temperature control of a single zone in a hydronic heating system.

- Include thermostat with special heat anticipator designed for best performance when used with the V8043 Zone Valve.
- Require 24 V power source.
- Custom packed with 10 Valves and 10 thermostats per carton.

Color: Thermostat – Premier White®
Body Pattern: Two-way
Pipe Connection: Sweat
Voltage: Valve – 24 Vac; Thermostat – 24V
Frequency: Valve – 50 Hz or 60 Hz; Thermostat – 50 Hz or 60 Hz
Valve Action: Spring return to close
Approvals, Underwriters Laboratories Inc.: UL Listed: Models V8043A,B,E,J & V8044A,B,E; UL Component Recognized: V8043F
Tradeline Value: Tradeline
Auxiliary Switch Ratings: 4.4 A running @ 120 V; 50 VA pilot duty @ 24 V

Material Number	Pipe Size (inch)	Maximum Differential Pressure Ratings (Close-off) (kPa)	Maximum Differential Pressure Ratings (Close-off) (psi)	Capacity (Cv)	Capacity (Kv)	Temperature Range	Electrical Connections	Thermostat Anticipator Setting	Includes	Comments
Y496A1074/U	3/4 in.	138 kPa	20 psi	3.5 Cv	3 Kv	55 to 95°F (13 to 35°C)	Valve – 18 in. leads; Thermostat – Screw Terminals			See V8043, T822K for more details
Y496A1082/U	1/2 in.	138 kPa	20 psi	3.5 Cv	3 Kv	55 to 95°F (13 to 35°C)	Valve – 18 in. leads; Thermostat – Screw Terminals			See V8043, T822K for more details
Y496A1090/U	3/4 in.	55 kPa	8 psi	8 Cv	6.9 Kv	55 to 95°F (13 to 35°C)	Valve – 18 in. leads; Thermostat – Screw Terminals			See V8043, T822K for more details
Y496B1024/U	3/4 in.	138 kPa	20 psi	3.5 Cv	3 Kv	40 to 90°F (4 to 32°C)	Valve – 18 in. leads; Thermostat – Screw Terminals	Heating – 0.1 to 1.2 A; Cooling – 0.0 to 1.5 A	104456B Wallplate	See V8043, T87K for more details
Y496B1040/U	3/4 in.	138 kPa	20 psi	3.5 Cv	3 Kv	40 to 90°F (4 to 32°C)	Valve – Screw Terminal Block; Thermostat – Screw Terminals	Heating – 0.1 to 1.2 A; Cooling – 0.0 to 1.5 A	104456B Wallplate	See V8043, T87K for more details

Zone Valve Replacement Parts

Material Number	Description	
272704A/U	Two 3/8 in. flare to 1/2 in. sweat adapters	
272704B/U	Two 3/8 in. flare to 3/4 in. sweat adapters	
272708A/U	Two 1/2 in. inverted flare to 1/2 in. sweat adapters	
272708B/U	Two 1/2 in. inverted flare to 3/4 in. sweat adapters	
272708C/U	Two 1/2 in. inverted flare to 1 in. sweat adapters	
272748AB/U	24V Replacement motor (international)	
272748ABP/U	24V, 50/60Hz replacement motor for V8043 zone valves	
272752DBP/U	120V, 60Hz replacement motor for V4043, V4044 zone valves	
40003918-001/U	Adaptor kit for converting three-way non-removable head style zone valves to removable head style	
40003918-002/U	Adaptor kit for converting straight-through (two-way) non-removable head style zone valves to removable head style	
40003918-006/U	Adaptor kit for V4043, V8043, 2-way hydronic valves	
40003918-007/U	Adaptor kit for V4044, V8044, 3-way diverting valves	
40003918-008/U	Adaptor kit for V4043E, J, V8043J, low pressure steam valves	
40004705-001/U	Compression Olive, 28 mm for valve fittings	
40004750-001/U	Replacement kit for 300 PSI rated Zone Valve including Adaptor plate, O-ring, Ball and Shaft, and 4 screws	
40004781-001/U	Resistor (1W) 470ohms	
40007008-0ML/U	3/4 in. Sweat 3-Way Valve Body	
40007028-0ME/U	1/2 in. BSPP 3-Way Valve Body	
40007035-003/U	Cable harness	
40007035-004/U	Cable harness	
40007142-001/U	Strain relief molex	
40007441-001/U	LV2000 actuator (ML7300A1004)	
40007442-211/U	VU12A1017, 2-way valve, 22mm compression	
40007442-221/U	VU12A1009, 2-way valve, 22mm sweat	
40007443-311/U	VU13A1015, 3-way valve, 22mm compression	
40007443-321/U	VU13A1007, 3-way valve, 22mm sweat	
802360JA/U	24V, 50/60Hz replacement motor for V8043 zone valves	
802360LA/U	120V, 60Hz replacement motor for V4043, V4044 zone valves	
802360NA/U	220V/50Hz; 240V/60Hz replacement motor for V4043, V4044 zone valves	
802360QA/U	277V, 60Hz replacement motor for V4043, V4044 zone valves	
802360UA/U	24V, 50/60 Hz Replacement motor for steam and heating Zone Valves	

Zone Valves Replacement Heads

Ambient Temperature Range: 125°F Maximum (52°C Maximum)

Material Number	Description	Electrical Connections	Voltage	Frequency	Auxiliary Switch Ratings	Used With	
40003916-001/U	240V, 50 Hz Replacement actuator for V4043	1 m	240V	50 Hz			
40003916-002/U	240V, 50 Hz Replacement actuator for V4044	1 m	240V	50 Hz			
40003916-003/U	240V, 50 Hz Replacement actuator for V4073	1 m	240V	50 Hz			
40003916-011/U	24V, 60 Hz Replacement actuator for V8043C	18 in. (457 mm) leads on same side of manual lever	24V	60 Hz			
40003916-012/U	24V, 60 Hz Replacement actuator for V8043G	18 in. (457 mm) leads on same side of manual lever	24V	60 Hz			
40003916-013/U	24V, 60 Hz Replacement actuator for V8043F		24V	60 Hz			
40003916-014/U	24V, 60 Hz Replacement actuator for V8043D	18 in. (457 mm) leads on same side of manual lever	24V	60 Hz		Valves with Action of Spring return to open	
40003916-021/U	24 Vac, 50/60 Hz Replacement head for V8043A	18 in. (457 mm) leads on same side of manual lever	24 Vac	50 Hz; 60 Hz		Valves with Action of Spring return to close	
40003916-023/U	240 Vac, 50 Hz Replacement head for V4043A, 240V, 50Hz	18 in. (457 mm) leads on same side of manual lever	240 Vac	50 Hz		Two-way valves; Valves with Action of Spring return to close	
40003916-024/U	120 Vac, 60 Hz Replacement head for V4043A	18 in. (457 mm) leads on same side of manual lever	120 Vac	60 Hz		Two-way valves; Valves with Action of Spring return to close	
40003916-025/U	24 Vac, 50/60 Hz Replacement head with End Switch for V8044E	18 in. (457 mm) leads on same side of manual lever	24 Vac	50 Hz; 60 Hz	4.4 A running @ 120 V; 50 VA pilot duty @ 24 V	Diverting Valves; Valves with Action of Spring return to close “A” port	
40003916-026/U	24 Vac, 50/60 Hz Replacement head with End Switch for V8044E	18 in. (457 mm) leads on same side of manual lever	24 Vac	50 Hz; 60 Hz	4.4 A running @ 120 V; 50 VA pilot duty @ 24 V	Two-way valves; Valves with Action of Spring return to close	
40003916-027/U	24 Vac, 50/60 Hz, N.O. Replacement head for V8043B	18 in. (457 mm) leads on same side of manual lever	24 Vac	50 Hz; 60 Hz		Two-way valves; Valves with Action of Spring return to open	
40003916-031/U	120 Vac, 60 Hz, N.O. Replacement head for V4043B	18 in. (457 mm) leads on same side of manual lever	120 Vac	60 Hz		Two-way valves; Valves with Action of Spring return to open	
40003916-032/U	24 Vac, 50/60 Hz Replacement head for V8044A	18 in. (457 mm) leads on opposite side of manual lever	24 Vac	50 Hz; 60 Hz		Diverting Valves; Valves with Action of Spring return to close “A” port	
40003916-036/U	120 Vac, 60 Hz Replacement head for V4044	18 in. (457 mm) leads on opposite side of manual lever	120V	60 Hz		Diverting Valves; Valves with Action of Spring return to close “A” port	
40003916-041/U	120 Vac, 60 Hz Replacement head for V4043E, Steam Valve	18 in. (457 mm) leads on same side of manual lever	120 Vac	60 Hz		Two-way valves; Valves with Action of Spring return to close	
40003916-048/U	24 Vac, 50/60 Hz Replacement head for V8043F, With End Switch	screw terminal block on same side of manual lever	24 Vac	50 Hz; 60 Hz	4.4 A running @ 120 V; 50 VA pilot duty @ 24 V	Two-way valves; Valves with Action of Spring return to close	
40003916-511/U	24V, 60 Hz Replacement actuator for V8043C "5000" series	18 in. (457 mm) leads on same side of manual lever	24V	60 Hz			
40003916-512/U	24V, 60 Hz Replacement actuator for V8043C "5000" series	18 in. (457 mm) leads on same side of manual lever	24V	60 Hz			
40003916-521/U	24 Vac, 50/60 Hz Replacement head for V8043A 5000 series	18 in. (457 mm) leads on same side of manual lever	24 Vac	50 Hz; 60 Hz		Two-way valves; Valves with Action of Spring return to close	
40003916-526/U	24 Vac, 50/60 Hz Replacement head with End Switch, for V8043E 5000 series	18 in. (457 mm) leads on same side of manual lever	24 Vac	50 Hz; 60 Hz	4.4 A running @ 120 V; 50 VA pilot duty @ 24 V	Two-way valves; Valves with Action of Spring return to close	
40003916-526/Z	24 Vac, 50/60 Hz Replacement head with End Switch, for V8043E 5000 series	18 in. (457 mm) leads on same side of manual lever	24 Vac	50 Hz; 60 Hz	4.4 A running @ 120 V; 50 VA pilot duty @ 24 V	Two-way valves; Valves with Action of Spring return to close	

Material Number	Description	Electrical Connections	Voltage	Frequency	Auxiliary Switch Ratings	Used With	
40003916-548/U	24 Vac, 50/60 Hz Replacement head for V8043F, With End Switch	screw terminal block on same side of manual lever	24 Vac	50 Hz; 60 Hz	4.4 A running @ 120 V; 50 VA pilot duty @ 24 V	Two-way valves; Valves with Action of Spring return to close	
802343/U	small o-ring; .114 inside dia.; .070 thickness; material: rubber						

MZV Series Motorized Zone Valves

Honeywell MZV Series is the first linear zone valve with a built-in balancing plug that permits pre-balancing for each zone.

- Rack and pinion linear design.
- Fast acting, 15 seconds to open, 5 seconds to close.
- Two piece rack design to extend service life.
- Low power consumption, 8 valves, 40 VA transformer.
- External valve position indicator.
- Quiet operation, no water hammer.
- Built-in tamper resistant balancing valve for pre-balancing.
- High torque, constant speed synchronous motor.
- Cooler running, longer life motor.
- Operator can be replaced without draining system.
- Manual opening feature.
- Replaceable valve cartridge.
- Large adjustable flow, 1/2 in. 3/4 in. Cv 5.8; 1 in. 7.0 Cv; 1-1/4 in. Cv 7.0.
- Motor CSA recognized.
- 4 wire operator with auxiliary switch.
- 2 wire without switch, 24 in. leads.
- Compatible with programmable thermostats.
- Bronze casting; brass/stainless trim.
- USA Patent Nos. 5,529,282; D369,650; 5,941,500; 6,032,924.
- UK Patent No. 2,052,382. 24 VAC, 60 Hz, 0.25 ampere.
- 30 mm collar (valve/actuator interface)

Application: Residential or Commercial Zoning for hot water heating or chilled water air conditioning systems, fan coil units or indirect water heater service.
Valve Type: Zone Valve
Body Pattern: Two-way
Voltage: 24 Vac
Frequency: 60 Hz

Auxiliary End Switch: SPST
Ambient Temperature Range: 125°F Maximum (52°C Maximum)
Pressure Range (psi): Maximum Water – 125 psi
Pressure Range (kPa): Maximum Water – 862 kPa
Operating Humidity Range (% RH): 5 to 95% relative humidity, non-condensing.

Dimensions in inches (millimeters)

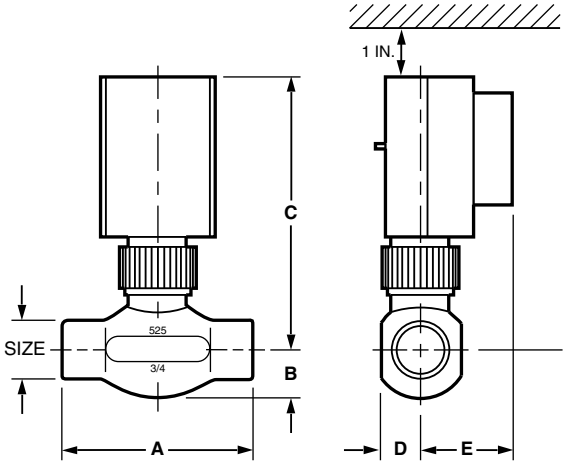

MZV SERIES	VALVE SIZE	DIMENSIONS IN INCHES (MM)				
		A	B	C	D	E
524	1/2 IN.	3-5/16 (84)	1 (25)	4-13/16 (122)	11/16 (17)	1-5/8 (41)
525	3/4 IN.	3-5/16 (84)	13/16 (21)	4-13/16 (122)	11/16 (17)	1-5/8 (41)
526	1 IN.	3-13/16 (97)	1 (25)	4-13/16 (122)	13/16 (21)	1-5/8 (41)
527	1-1/4 IN.	3-13/16 (97)	1 (25)	4-13/16 (122)	13/16 (21)	1-5/8 (41)

M23259B

Patented long life rack and pinion design with built-in balancing valve

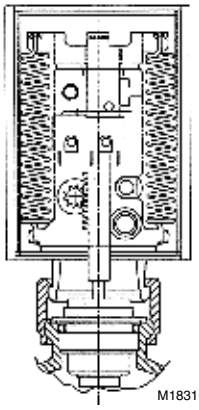

Material Number	Capacity (Cv)	Pipe Size (inch)	Pipe Size (DN)	Connection Type	Maximum Differential Pressure Ratings (Close-off) (psi)
MZV524E-T/U	5.8 Cv	1/2 in.	DN15	NPT	20 psi
MZV525E/U	5.8 Cv	3/4 in.	DN20	Sweat	20 psi
MZV525E-T/U	5.8 Cv	3/4 in.	DN20	NPT	20 psi
MZV526E/U	7.0 Cv	1 in.	DN25	Sweat	17.5 psi
MZV526E-T/U	7.0 Cv	1 in.	DN25	NPT	17.5 psi
MZV527E/U	7.0 Cv	1 1/4 in.	DN32	Sweat	17.5 psi

MZV Series Replacement Parts

Material Number	Description	Voltage	Frequency	Auxiliary End Switch	Maximum Differential Pressure Ratings (Close-off) (psi)	Pressure Range (psi)	Pressure Range (kPa)	Ambient Temperature Range	
MZV520-RP/U	Replacement operator for MZV 524/525/526/527 with end switch	24 Vac	60 Hz	SPST				240°F Maximum (115°C Maximum)	
MZV521-RP/U	Replacement operator for MZV 524/525/526/527 without end switch	24 Vac	60 Hz	No				240°F Maximum (115°C Maximum)	
MZV525-RP/U	Replacement valve cartridge for 1/2 in. (MZV524, MZV524E) and 3/4 in. (MZV525, MZV525E) valves	24 Vac	60 Hz		20 psi	Maximum Water – 125 psi	Maximum Water – 862 kPa	240°F Maximum (115°C Maximum)	
MZV526-RP/U	Replacement valve cartridge for 1 in. (MZV526, MZV526E) and 1 1/4 in. (MZV527, MZV527E) valves	24 Vac	60 Hz		17.5 psi	Maximum Water – 125 psi	Maximum Water – 862 kPa	240°F Maximum (115°C Maximum)	

AquaPUMP™ Hydronic Circulating Pumps

The PC3F in-line, wet rotor circulator with universal flange is designed for applications in closed-loop hydronic heating and cooling systems, as well as in solar systems. The pump is non-submersible and for use in dry, frost-free, well-ventilated installations.

- Twist-To-Fit Universal Flange, Rotates 90° to fit most installations with a single product
- Three pump sizes cover every application
- 3-Speed Versatility maximizes efficiency and provides sufficient flow rates with a single pump
- Universal Design replaces wide range of competitive models with just one brand
- Check valves included with each pump

Dimensions in inches (millimeters)

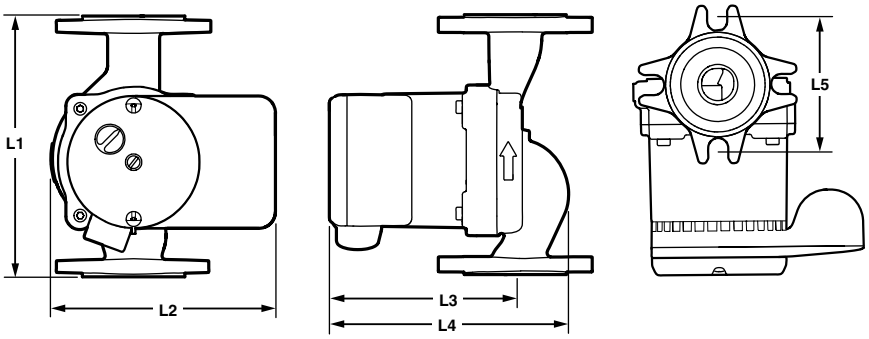

MATERIAL NUMBER	L1	L2	L3	L4	L5
PC3F1558IUF00	6.5 (165.5)	5.5 (140)	4.7 (118)	6.6 (167)	3.2 (80.2)
PC3F2699IUF00	6.5 (165.5)	6.1 (155)	6.5 (165.5)	7.75 (197)	3.2 (80.2)
PC3F4344IUF00	8.5 (216)	6.1 (155)	6.9 (174)	8.9 (227)	3.4 (87.3)

M34725

Voltage: 115V at 60 Hz
Maximum Water Pressure (psi): 145 psi
Ambient Temperature Range: 32°F to 104°F (0°C to 40°C)
Materials: Housing – Cast Iron; Bearings and Shaft – Ceramic

Fluid Temperature: 230°F Maximum (110°C Maximum)
Maximum Noise Rating: Driving (dB(A) @ 1m) – 43
Common Product Name: AquaPUMP

Material Number	Maximum Flow Rate (gpm)	Pressure Head	Approximate, Dimensions (in.)	Current Draw	Description
PC3F1558IUF00/U	15 gpm	19	6-1/2 in. A to B ports End to End	Nominal (minimum speed) – 0.3; Nominal (maximum speed) – 0.75	3-Speed Circulation Pump
PC3F2699IUF00/U	25 gpm	31	6-1/2 in. A to B ports End to End	Nominal (minimum speed) – 1.1; Nominal (maximum speed) – 1.7	3-Speed Circulation Pump
PC3F4344IUF00/U	45 gpm	17	8-1/2 in. A to B ports End to End	Nominal (minimum speed) – 1.1; Nominal (maximum speed) – 1.7	3-Speed Circulation Pump

AquaPUMP™ Accessories

Material Number	Fluid Temperature	Approximate, Dimensions (in.)	Description	
PCG100/U	230°F Maximum (110°C Maximum)	1 in.	1 inch Circulating Pump Flange Gasket	
PCG125/U	230°F Maximum (110°C Maximum)	1-1/4 in.	1-1/4 inch Circulating Pump Flange Gasket	
PCG150/U	230°F Maximum (110°C Maximum)	1-1/2 in.	1-1/2 inch Circulating Pump Flange Gasket	
PCV100/U	200°F Maximum (93°C Maximum)	1 in.	1 inch Circulating Pump Check Valve	
PCV125/U	200°F Maximum (93°C Maximum)	1-1/4 in.	1-1/4 inch Circulating Pump Check Valve	
PCV150/U	200°F Maximum (93°C Maximum)	1-1/2 in.	1-1/2 inch Circulating Pump Check Valve	

D146 Differential Pressure Regulators

The differential pressure regulator eliminates excessive pump head pressure, when most radiator valves are closed due to reduced demand, by controling flow through a bypass line when the difference between supply/return exceeds the setpoint.

- Install between supply and return sides of a hydronic system to stabilize pressure differential and reduce the effects of demand changes.
- Control maintains a constant differential between the two sides by opening a bypass whenever the difference between supply and return reaches the setpoint.
- Provides silent, trouble-free service.
- Easy installation; requires no electrical hookup.
- Easy adjustment of pressure by turning regulating cap.
- Built-in differential pressure indicator.
- Brass valve body with thermoplastic and stainless steel parts.
- Diaphragm of EPDM.

Valve Type: Pressure Regulating Valve
Connection Type: Angle type, female threaded NPT
Materials (Body): Brass (body), Stainless steel and engineered thermoplastics. EPDM diaphragm.

Outlet Pressure Adjustment Range (psi): 0-17 psi
Max. Inlet Pressure Rating (psi): 85 Psi
Operating Temperature Range: 230°F Maximum (110°C Maximum)

D146 Capacities

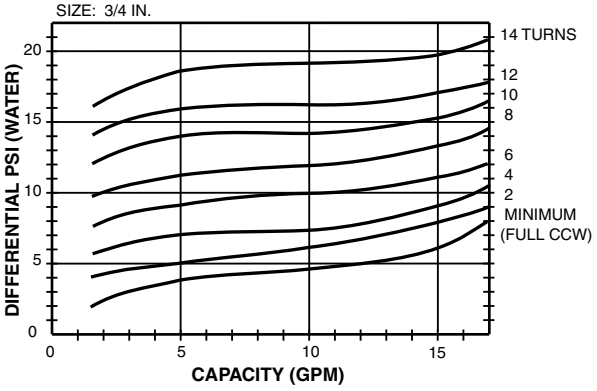

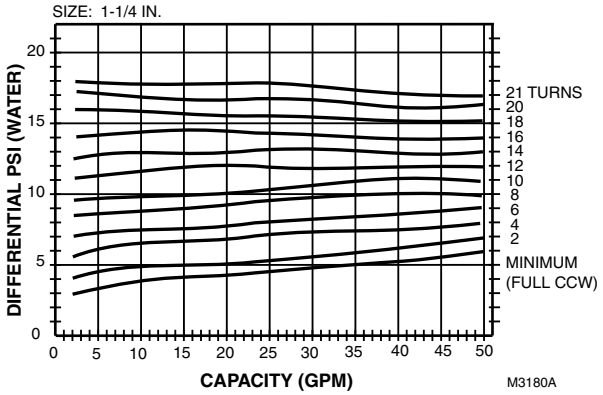

Material Number	Pipe Size (inch)	Pipe Size (DN)	Capacity	Approximate, Dimensions	Description	Includes
D146M1032	3/4 in.	DN20	120,000 Btu/hr; 18 gpm	6 1/4 in. high x 3 3/8 in. wide (160 mm high x 86 mm wide)	Differential Pressure Regulator, 3/4 in.	Built-in differential pressure indicator
D146M1040	1 1/4 in.	DN32	395,000 Btu/hr; 50 gpm	8 1/2 in. high x 4 1/4 in. wide (213 mm high x 109 mm wide)	Differential Pressure Regulator, 1 1/4in.	Built-in differential pressure indicator

EA79 Industrial Air Vents

The Honeywell EA79 Industrial Air Vent purges air from high pressure mains and equipment in hot or cold closed water systems.

- Built-in shutoff valve for servicing without system shutdown.
- Built-in vacuum breaker.
- Removable float/valve assembly for easy servicing.
- Safety drain connection and vent cap with leakage guard.
- Brass shell construction.
- Internal parts made of corrosion-resistant and chemical-resistant materials for use with water systems containing propylene glycol, mineral oils, or petroleum-based oils. Replaces Hoffman # 79 or Dole # 75 Vents.
- Maintains quiet and efficient operation.

Dimensions in inches (millimeters)

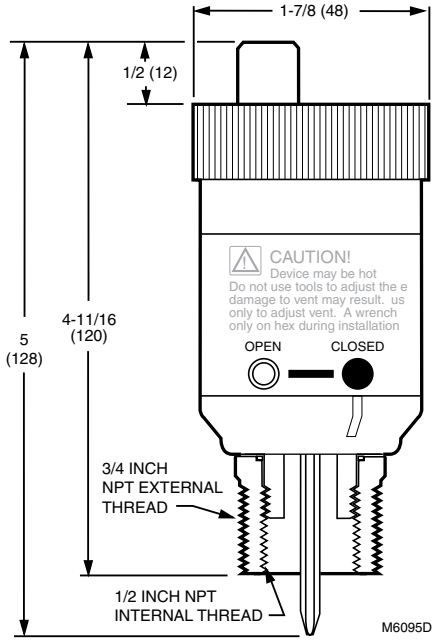

EA79 construction

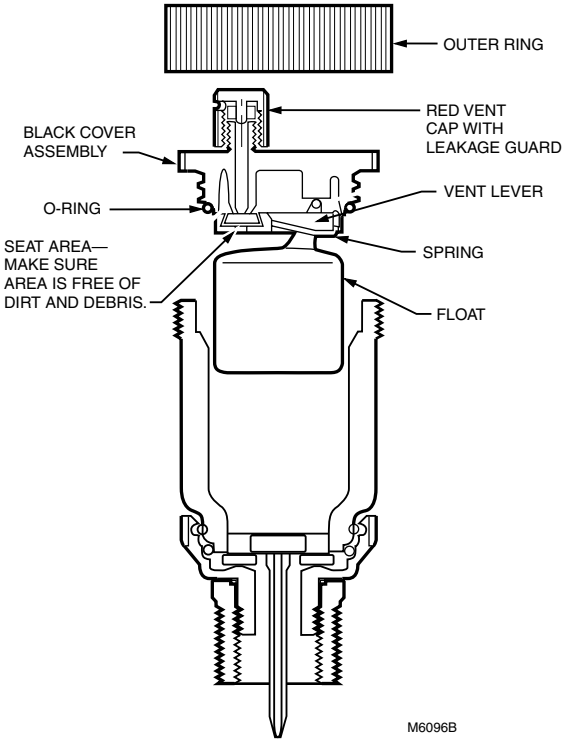

EA79 capabilities

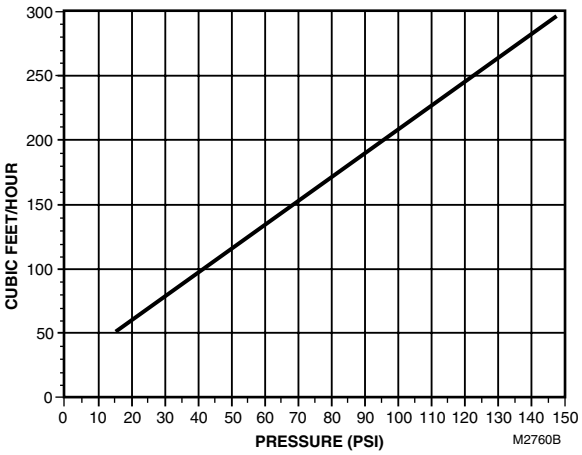

Application: Hydronics
Operating Temperature Range: 250°F Maximum (120°C Maximum)
Maximum Safe Operating Pressure (psi): 150 psi
Maximum Safe Operating Pressure (kPa): 1034 kPa
Approximate, Dimensions: 5 in. long x 1 7/8 in. diameter (128 mm long x 48 mm diameter)
Comments: Internal parts made of corrosion-resistant and chemical-resistant materials for use with hydronic systems that may contain concentrations of propylene or ethylene glycol.

Material Number	Connection Type	Connection Size (in.)	Description
EA79A1004	3/4 in. male NPT pipe thread with 1/2 in. female NPT pipe thread	3/4 in.	Industrial automatic air vent

EA122A Automatic Air Vent for Non-Heating System Applications

The Honeywell EA122A Automatic Air Vent purges air from high pressure mains and equipment in hot or cold potable water systems.

- Includes removable float/valve assembly for easy servicing.
- Not for use in steam systems.
- Body, cover and float assembly made of thermoplastics.
- Internal parts made of corrosion-resistant and chemical-resistant materials for use with water systems containing light concentrations of propylene glycol, mineral oils, or petroleum-based oils.
- Oil resistant seal.
- EPDM seat disc and O-ring.

Dimensions in inches (millimeters)

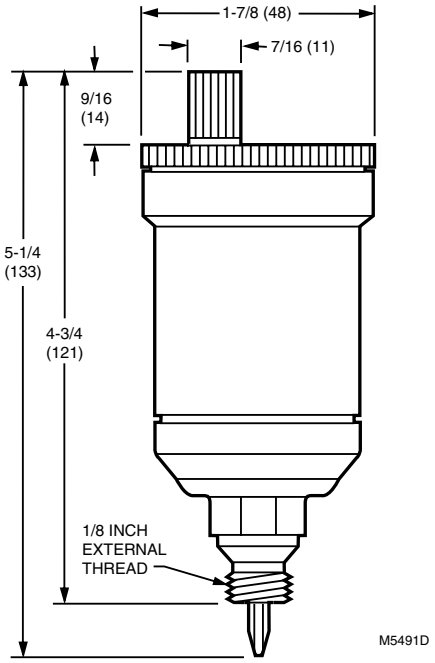

EA122A construction

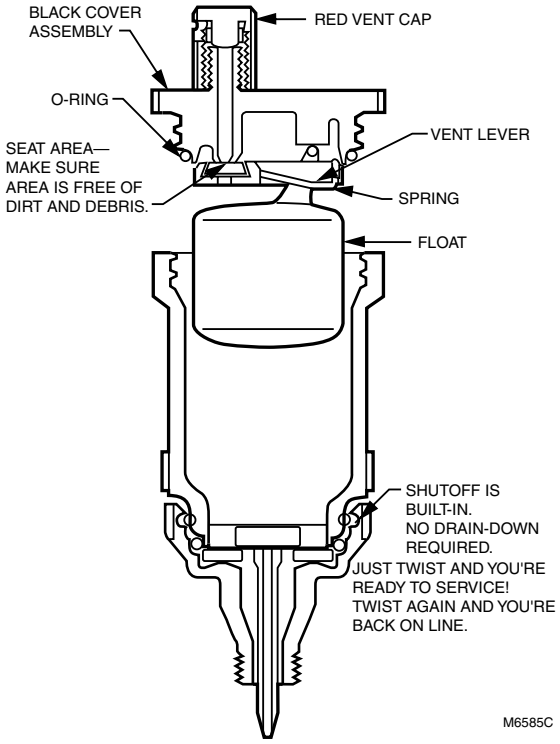

Application: Potable water installations
Operating Temperature Range: 212°F Maximum (100°C Maximum)
Maximum Safe Operating Pressure (psi): 90 psi
Maximum Safe Operating Pressure (kPa): 620 kPa
Approximate, Dimensions: 5 1/4 in. long x 1 7/8 in. diameter (133 mm long x 48 mm diameter)

Comments: Internal parts made of corrosion-resistant and chemical-resistant materials for use with hydronic systems that may contain concentrations of propylene or ethylene glycol.

Material Number	Connection Type	Connection Size (in.)	Description
EA122A1028	Male NPT	1/8 in.	Automatic air vent with built-in shut off valve; includes EPDM seat disc and O-ring.
EA122B117	Male NPT	1/8 in.	Automatic Air vent without build-in shutoff valve or leakage guard; includes EPDM seat disc and O-ring.

EA122A Automatic Air Vent for Heating System Applications

The Honeywell EA122A Automatic Air Vent purges air from high pressure mains and equipment in hot or cold closed water systems.

- Includes removable float/valve assembly for easy servicing.
- Not for use in steam systems.
- Body, cover and float assembly made of thermoplastics.
- Internal parts made of corrosion-resistant and chemical-resistant materials for use with water systems containing light concentrations of propylene glycol, mineral oils, or petroleum-based oils.
- Oil resistant seal.
- NBR seat disc and O-ring.

Dimensions in inches (millimeters)

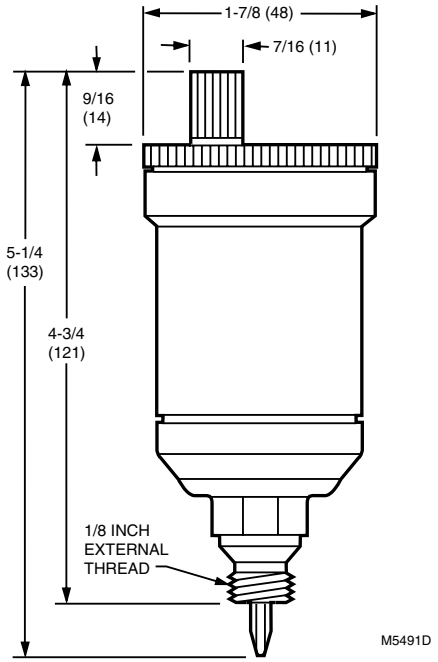

EA122A construction

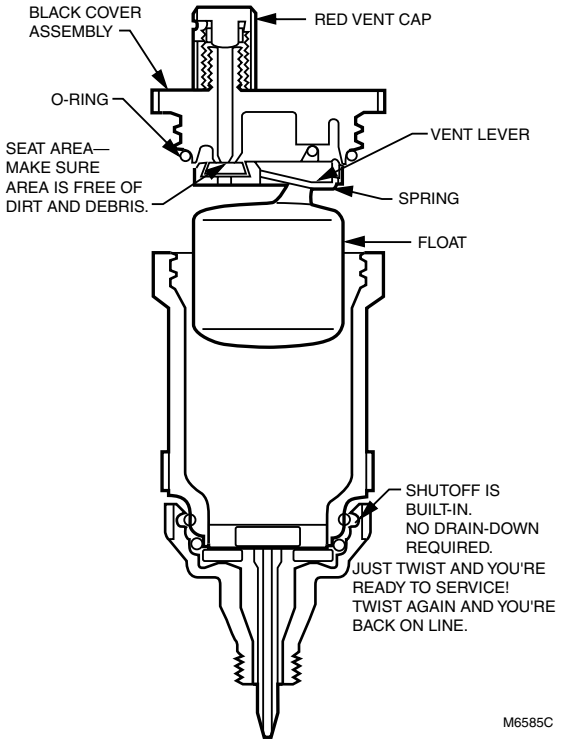

Application: Hydronic heating and cooling
Operating Temperature Range: 212°F Maximum (100°C Maximum)
Maximum Safe Operating Pressure (psi): 90 psi
Maximum Safe Operating Pressure (kPa): 620 kPa

Approximate, Dimensions: 5 1/4 in. long x 1 7/8 in. diameter (133 mm long x 48 mm diameter)
Comments: Internal parts made of corrosion-resistant and chemical-resistant materials for use with hydronic systems that may contain concentrations of propylene or ethylene glycol.

Material Number	Connection Type	Connection Size (in.)	Description
EA122A1002	Male NPT	1/8 in.	Automatic air vent with built-in shutoff valve and leakage guard, oil resistant

GoldTop™—Universal Air Vent for Residential and Commercial Heating and Cooling Systems

The GoldTop offers a convenient, one-fits-all concept, to stock one vent for all your venting needs, between 1 and 150 psi systems. Honeywell's revolutionary patented fulcrum design offers a venting rate of 3-4 times that of other products.

- Patent No. 5,988,201.

Application: Residential or commercial heating and cooling systems
Operating Temperature Range: 240°F Maximum (115°C Maximum)
Maximum Safe Operating Pressure (psi): 150 psi
Maximum Safe Operating Pressure (kPa): 1034 kPa
Approximate, Dimensions: 1 27/32 in. diameter x 3 1/4 in. long (24 mm diameter x 83 mm long)
Materials: Brass

Material Number	Connection Type	Connection Size (in.)	Weight	Description
FV180/U	Male NPT	1/8 in.	0.4 lb (0.18 kg)	1/8 in. NPT Goldtop Universal Air Vent for heating and cooling systems
FV180A/U	Male NPT	1/4 in.	0.4 lb (0.18 kg)	1/4 in. NPT Goldtop Universal Air Vent for heating and cooling systems

MaxiVent™ Air Vent for Heating and Cooling Systems

The Maxivent features a low profile, fit anywhere solid brass body and cover, and a high temperature polypropylene float.

Application: Residential or commercial heating and cooling systems
Operating Temperature Range: 240°F Maximum (115°C Maximum)
Maximum Safe Operating Pressure (psi): 150 psi
Maximum Safe Operating Pressure (kPa): 1034 kPa
Approximate, Dimensions: 2 in. high x 1 5/32 in. diameter (51 mm high x 29 mm diameter)
Materials: Brass

Material Number	Connection Type	Connection Size (in.)	Weight	Description
FV147/U	Male NPT	1/8 in.	0.12 lb (0.06 kg)	1/8 in. NPT Air Vent for heating and cooling systems
FV147A/U	Male NPT	1/4 in.	0.12 lb (0.06 kg)	1/4 in. NPT Air Vent for heating and cooling systems

AP400 Air Purger

Replacement Parts - Old Style AM Series (Aquamix)

- Heavy Duty cast iron construction
- 1 inch, 1 1/4 and 1 1/2 inch models (inlet and outlet)
- 1/2 inch bottom tapping for expansion tank mount
- 1/8 inch top tapping for air vent mount
- Directional flow arrow for correct installation

Application: Closed heating systems
Operating Temperature Range: 275°F Maximum (135°C Maximum)
Maximum Safe Operating Pressure (psi): 125 psi
Maximum Safe Operating Pressure (kPa): 862 kPa
Approximate, Dimensions: 6 in. long x 3-3/4 in. high x 2-3/8 in. wide (152 mm long x 95 mm high x 60 mm wide)
Materials: Cast Iron

Material Number	Connection Type	Pipe Size (inch)	Connection Size (in.)	Weight	Description
AP400/U	Female NPT	1 in.	Bottom: 1/2 in.; Top: 1/8 in.	4.2 lb (1.9 kg)	1 in. NPT Air Purger for closed heating systems
AP401/U	Female NPT	1 1/4 in.	Bottom: 1/2 in.; Top: 1/8 in.	3.8 lb (1.7 kg)	1 1/4 in. NPT Air Purger for closed heating systems
AP402/U	Female NPT	1 1/2 in.	Bottom: 1/2 in.; Top: 1/8 in.	8.6 lb (3.9 kg)	1 1/2 in. NPT Air Purger for closed heating systems

SuperVent® Air Eliminator — Eliminates Air from Hydronic Heating Systems without Bleeding

The Honeywell SuperVent, purges air through a no clog vent assembly, to control dirt and debris and minimize air vent fouling in Hydronic heating systems, while eliminating the need for bleeding.

- No clog vent.
- Dirt and Debris resistant.
- 360 degree adjustable collar ring for installation flexibility.
- Stainless steel concentrator which eliminates gurgling noise.
- Bronze body for rigid construction.
- Threaded connections.

Application: Residential or Commercial closed loop hydronic heating or chilled water systems
Operating Temperature Range: 240°F Maximum (115°C Maximum)
Maximum Safe Operating Pressure (psi): 125 psi
Maximum Safe Operating Pressure (kPa): 862 kPa
Materials: Bronze

How it works

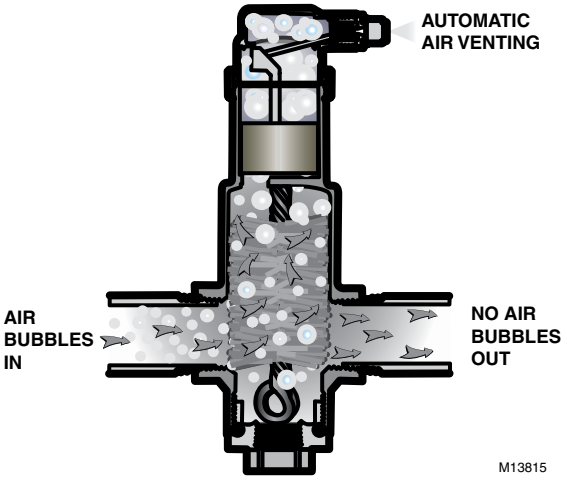

Material Number	Pipe Size (inch)	Approximate, Dimensions	Connection Type	Connection Size (in.)	Capacity (Cv)	Weight
PV075/U	3/4 in.	6 29/32 in. high x 2 11/16 in. wide; Maximum diameter: 1 13/16 in. (176 mm high x 68 mm wide; Maximum diameter: 46 mm)	Female NPT	1/2 in.	13 Cv	2 lb (0.9 kg)
PV075S/U	3/4 in.	6 29/32 in. long x 3 3/16 in. wide; Maximum diameter: 1 13/16 in. (176 mm high x 81 mm long; Maximum diameter: 46 mm)	Sweat	1/2 in.	13 Cv	2 lb (0.9 kg)
PV100/U	1 in.	6 1/2 in. high x 3 3/32 in. wide; Maximum diameter: 2 3/32 in. (192 mm high x 79 mm long; Maximum diameter: 53 mm)	Female NPT	1/2 in.	22 Cv	2.75 lb (1.2 kg)
PV100S/U	1 in.	6 1/2 in. high x 3 11/16 in. wide; Maximum diameter: 2 3/32 in. (192 mm long x 94 mm wide; Maximum diameter: 53 mm)	Sweat	1/2 in.	22 Cv	2.75 lb (1.2 kg)
PV125/U	1 1/4 in.	7 27/32 in. high x 3 11/16 in. wide; Maximum diameter: 2 1/2 in. (199 mm high x 94 mm wide; Maximum diameter: 64 mm)	Female NPT	1/2 in.	38 Cv	3.5 lb (1.6 kg)
PV125S/U	1 1/4 in.	7 27/32 in. high x 4 13/32 in. wide; Maximum diameter: 2 1/2 in. (199 mm high x 112 mm wide; Maximum diameter: 64 mm)	Sweat	1/2 in.	38 Cv	3.5 lb (1.6 kg)
PV150/U	1 1/2 in.	9 5/32 in. high x 4 5/16 in. long; Maximum diameter: 3 3/32 in. (233 mm high x 110 mm long; Maximum diameter: 79 mm)	Female NPT	1/2 in.	50 Cv	5.2 lb (2.4 kg)
PV150S/U	1 1/2 in.	9 5/32 in. high x 4 5/16 in. long; Maximum diameter: 3 3/32 in. (233 mm high x 110 mm long; Maximum diameter: 79 mm)	Sweat	1/2 in.	50 Cv	5.2 lb (2.4 kg)
PV200/U	2 in.	10 9/32 in. high x 5 3/16 in. long; Maximum diameter: 4 in. (261 mm high x 132 mm long; Maximum diameter: 102 mm)	Female NPT	1/2 in.	95 Cv	8 lb (3.6 kg)
PV200S/U	2 in.	10 9/32 in. high x 5 3/16 in. long; Maximum diameter: 4 in. (261 mm high x 132 mm long; Maximum diameter: 102 mm)	Sweat	1/2 in.	95 Cv	8 lb (3.6 kg)

SuperVent® Air Eliminator Universal Models — Eliminate Air from Hydronic Heating Systems without Bleeding

The Honeywell SuperVent, purges air through a no clog vent assembly, to control dirt and debris and minimize air vent fouling in Hydronic heating systems, while eliminating the need for bleeding.

- No clog vent.
- Dirt and Debris resistant.
- 360 degree adjustable collar ring for installation flexibility.
- Stainless steel concentrator which eliminates gurgling noise.
- Bronze body for rigid construction.
- Threaded connections.

Application: Residential or Commercial closed loop hydronic heating or chilled water systems
Connection Type: Female NPT
Operating Temperature Range: 240°F Maximum (115°C Maximum)

Maximum Safe Operating Pressure (psi): 125 psi
Maximum Safe Operating Pressure (kPa): 862 kPa
Materials: Bronze

Typical Installation

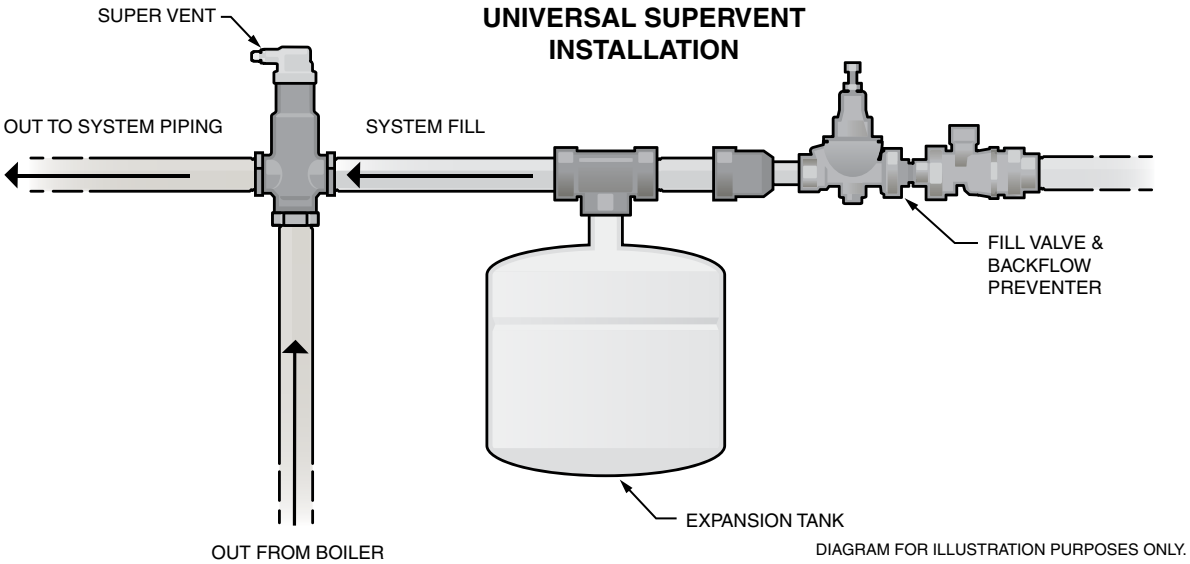

Material Number	Pipe Size (inch)	Connection Size (in.)	Capacity (Cv)	Approximate, Dimensions	Weight
PVU075/U	3/4 in.	3/4 in. bottom inlet	3.6 Cv	7 9/32 in. long x 2 11/16 in. wide; Maximum diameter: 1 13/16 in. (185 mm long x 68 mm wide; Maximum diameter: 46 mm)	2.1 lb (0.9 kg)
PVU100/U	1 in.	1 in. bottom inlet	6.2 CV	7 27/32 in. high x 4 13/32 in. wide; Maximum diameter: 2 3/32 in. (199 mm high x 112 mm wide; Maximum diameter: 53 mm)	2.8 lb (1.3 kg)
PVU125/U	1 1/4 in.	1 1/4 in. bottom inlet	10.5 Cv	8 1/4 in. high x 3 11/16 in. wide; Maximum diameter: 2 1/2 in. (212 mm high x 94 mm long; Maximum diameter: 64 mm)	3.6 lb (1.6 kg)
PVU150/U	1 1/2 in.	1 1/2 in. bottom inlet	14.3 Cv	9 13/32 in. high x 4 5/16 in. wide; Maximum diameter: 3 3/32 in. (239 mm high x 110 mm long; Maximum diameter: 79 mm)	5.2 lb (2.4 kg)

SuperVent® Vent Top for Heating and Cooling Systems

The SuperVent has high venting capacity and incorporates a check valve. Use with SuperVent PV Series products.

Application: Residential or commercial heating and cooling systems
Operating Temperature Range: 240°F Maximum (115°C Maximum)
Maximum Safe Operating Pressure (psi): 150 psi
Maximum Safe Operating Pressure (kPa): 1034 kPa
Materials: Brass

Material Number	Connection Type	Pipe Size (inch)	Pipe Size (DN)	Connection Size (in.)	Weight	Approximate, Diamensions
SV173/U	NPT	3/8 in.	DN10	3/8 in.	0.43 lb (0.19 kg)	3 in. high x 2 in. diameter; Maximum diameter: 2 in. (76 mm high x 51 mm diameter; Maximum diameter: 51 mm)
SV175/U	NPT	1/2 in.		1/2 in.	0.43 lb (0.19 kg)	3 in. high x 2 in. diameter; Maximum diameter: 2 in. (76 mm high x 51 mm diameter; Maximum diameter: 51 mm)

SuperVent Replacement Parts

Material Number	Description
PV-001RP/U	Replacement Air Vent Assembly for PowerVent (pre 2004) size 3/4 in., 1 in., 1 1/4 in., 1 1/2 in. and 2 in.
PV-020RP/U	PV SuperVent Vent Top Replacement (New Style 90 Degree)

Backflow Preventers with Intermediate Atmospheric Vent for Heating Systems

Honeywell BP900 backflow preventer is designed for continuous pressure applications on small supply lines. It uses an intermediate vacuum breaker to protect against backflow and back siphonage of contaminated water into portable water supplies.

- Ideal for boiler feed lines, livestock drinking fountains, trailer park water hook-ups, laboratory equipment and numerous other applications
- Suitable for hot or cold water service
- Designed for non-continuous backflow temperatures up to 250°F and working supply pressures up to 175 psi

Application: Backflow Preventer
Connection Type: NPT
Ambient Temperature Range: 250°F Maximum (121°C Maximum)
Maximum Safe Operating Pressure (psi): 175 psi
Maximum Safe Operating Pressure (kPa): 1207 kPa
Approximate, Dimensions: 4 7/8 in. long x 2 1/2 in. wide (124 mm long x 63 mm wide)
Approvals, CSA: Certified
Approvals, Others: ASSE Certified

Typical Installation

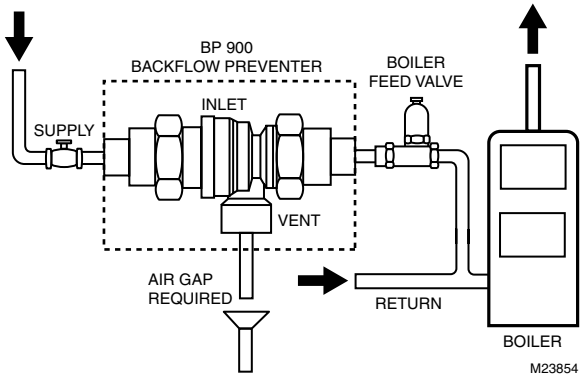

Material Number	Pipe Size (inch)	Pipe Size (DN)	Connection Size (in.)	Description	Weight
BP900/U	1/2 in.	DN15	1/2 in.	Double check intermediate vacuum breaker - 1/2 in. NPT	1.2 lb (0.54 kg)

“DialSet” Boiler Fill Valves

Pressure regulating valve for automatic control of boiler feed water and other pressure reducing applications. Especially constructed for expansion tank mounting.

- DialSet Fill Valve.
- Built in check valve.

Valve Type: DialSet Fill Valve
Pipe Size (inch): 1/2 in. Inlet Size – 1/2 in.
Connection Type: NPT; Inlet – Sweat or Threaded

Ambient Temperature Range: 212°F Maximum (100°C Maximum)
Pressure Range (psi): 8 psi to 50 psi
Materials (Body): Brass

Material Number	Application	Maximum Safe Operating Pressure (psi)	Maximum Safe Operating Pressure (kPa)	Weight	Description
FM911/U	DialSet boiler fill valve pressure reducing valve 15 psi preset and backflow preventer (VF06-100-SUSUT and BP900 assembly)	150 psi	1034 kPa	4 lb (1.8 kg)	1/2 in. NPT Backflow preventer and DialSet boiler fill assembly, includes union nut and both sweat and NPT tailpiece
VF06-100-SUSUT/U	DialSet Fill Valve pressure regulating boiler feed valve with check valve.	150 psi	1034 kPa	1.8 lb (0.8 kg)	1/2 in. sweat union pressure reducing valve, DialSet boiler fill valve, includes union nut and both sweat and NPT tailpiece

Sweat and Threaded Thermometers with Thermowells

Thermometer with Sweat or Threaded Connection.

- Brass thermowell is included to allow the thermometer to be removed without draining the system.
- 2 inch or 2 1/2 inch Dial.

Application: Brass thermowell is included to allow the thermometer to be removed without draining the system.
Temperature Range: 32°F to 250°F (0°C to 121°C)
Materials: Case: steel; Well: brass

Comments: Brass thermowell is included to allow the thermometer to be removed without draining the system.

Material Number	Connections	Approximate, Dimensions	Weight
GS200/U	1/2 in. Sweat	Dial Size – 2 in.; Stem length – 1 1/4 in. (Dial Size – 51 mm; Stem length – 51 mm)	0.21 lb (0.095 kg)
GS250/U	1/2 in. Sweat	Dial Size – 2 1/2 in.; Stem length – 1 1/4 in. (Dial Size – 63.5 mm; Stem length – 51 mm)	0.25 lb (0.114 kg)
GT161/U	1/2 in. NPT	Dial Size – 2 in.; Stem length – 1 1/2 in. (Dial Size – 51 mm; Stem length – 51 mm)	0.21 lb (0.095 kg)
GT162/U	1/2 in. NPT	Dial Size – 2 1/2 in.; Stem length – 1 1/2 in. (Dial Size – 63.5 mm; Stem length – 51 mm)	0.25 lb (0.114 kg)

Tridicators

Pressure/temperature gauge with relief set point indicator for boilers and shut off valve.

Dimensions Diagram

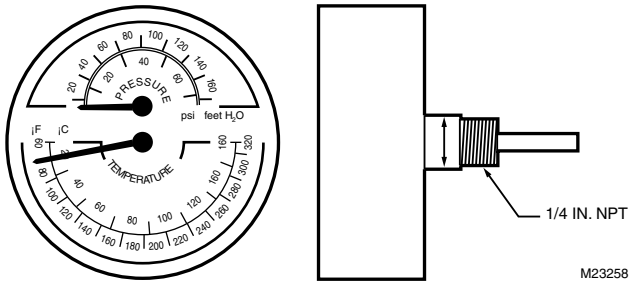

Application: Pressure/temperature gauge with relief set point indicator
Maximum Safe Operating Pressure (psi): 75 psi
Temperature Range: 60°F to 320°F (15°C to 160°C)

Material Number	Connections	Approximate, Dimensions	Weight	Comments
TD-090/U	1/4 in. NPT	Dial Size – 3 1/8 in.; Stem length – 1 21/32 in. (Dial Size – 79.4 mm; Stem length – 23 mm)	0.3 lb (0.14 kg)	Pressure/temperature gauge with relief set point indicator
TD-165/U	1/4 in. NPT	Dial Size – 3 1/8 in.; Stem length – 2 in. (Dial Size – 79.4 mm; Stem length – 42.1 mm)	0.3 lb (0.14 kg)	Pressure/temperature gauge with relief set point indicator
TDV-040/U	1/2 in. NPT	Dial Size – 3 1/8 in.; Stem length – 29/32 in. (Dial Size – 79.4 mm; Stem length – 23.02 mm)	0.4 lb (0.18 kg)	Pressure/temperature gauge with relief set point indicator and shut off valve

TK300 Series Expansion Tanks—Heating

Honeywell Expansion Tanks absorb hot water expansion in closed heating systems. They are equipped with butyl diaphragms to separate the air from the system water. Pre-pressurized, the tank keeps fluids circulating and maintains minimum pressure.

- Butyl/EPDM diaphragm - 9 times better than natural rubber
- Deep-drawn steel tank
- Controls system pressure
- Air-tight cushion-factory pre-charged to 12 psig and 100% tested

Maximum Safe Operating Pressure (psi): 100 psi
Maximum Safe Operating Pressure (kPa): 689 kPA

Operating Temperature Range: 240°F Maximum (115°C Maximum)
Comments: Heating

Material Number	Connection Size (in.)	Connection Type	Diameter	Height	Volume	Weight	Maximum Acceptance Volume	Materials
TK300-15/U	1/2 in.	Male NPT	8 in. (203.2 mm)	12 5/8 in. (321 mm)	2.0 gal (7.6 L)	5 lb (2.3 kg)	1 gal (3.8 L)	Steel shell; Heavy duty Butyl diaphragm
TK300-30/U	1/2 in.	Male NPT	11 in. (279 mm)	15 1/2 in. (394 mm)	4.4 gal (16.7 L)	9 lb (4.1 kg)	2.5 gal (9.5 L)	Steel shell; Heavy duty Butyl diaphragm
TK300-60/U	1/2 in.	Male NPT	11 in. (279 mm)	23 in. (584 mm)	7.6 gal (28.8 L)	14 lb (6.4 kg)	2.5 gal (9.5 L)	Steel shell; Heavy duty Butyl diaphragm
TK300-90/U	1/2 in.	Male NPT	15 3/8 in. (390.5 mm)	21 in. (533 mm)	14.0 gal (53.1 L)	23 lb (10.4 kg)	11.5 gal (40.1 L)	Steel shell; Heavy duty Butyl diaphragm

Expansion Tank Sizing based on BTU's

Boiler	Type of Radiation			
Net Output in 1000's of BTU/Hr	Finned Tube Baseboard or Radiant Panel	Convectors or Unit Heaters	Radiators Cast Iron	Baseboard Cast Iron
MBH	Use Model	Use Model	Use Model	Use Model
25	TK300-15	TK300-15	TK300-15	TK300-15
50	TK300-15	TK300-15	TK300-30	TK300-30
75	TK300-30	TK300-30	TK300-30	TK300-60
100	TK300-30	TK300-30	TK300-60	TK300-60
125	TK300-30	TK300-60	TK300-60	TK300-90
150	TK300-30	TK300-60	TK300-90	TK300-90
175	TK300-60	TK300-60	XPS-030V	XPS-030V
200	TK300-60	TK300-60	XPS-030V	XPS-030V
250	TK300-60	TK300-90	XPS-030V	XPS-040V
300	TK300-90	XPS-030V	XPS-030V	XPS-040V
350	XPS-030V	XPS-030V	XPS-040V	XPS-060V
400	XPS-030V	XPS-040V	XPS-040V	XPS-060V

Service Check Valves

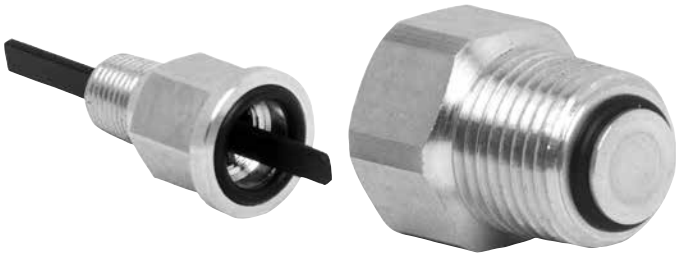

Service Check Valves for air vents and expansion tanks allow easy field service without draining system.

CAUTION: Reduce system temperature to ambient and pressure to 0 psi before servicing component. Failure to do so may result in injuries.

Maximum Safe Operating Pressure (psi): 100 psi
Maximum Safe Operating Pressure (kPa): 689 kPA
Operating Temperature Range: 240°F Maximum (115°C Maximum)

Material Number	Connection Size (in.)	Connection Type
SCV-0125/U	1/8 in.	Inlet FNPT, Outlet MNPT
SCV-050/U	1/2 in.	Inlet FNPT, Outlet MNPT

Boiler Trim Kit with SuperVent

Honeywell TK Series Combo Boiler Trim kits are a quick way to purchase boiler trim when doing a boiler change out. All kits with SuperVent include expansion tank and a high performance air eliminator.

Maximum Safe Operating Pressure (psi): 100 psi
Maximum Safe Operating Pressure (kPa): 689 kPA
Operating Temperature Range: 240°F Maximum (115°C Maximum)
Diameter: 11 in. (279 mm)

Material Number	Connection Size (in.)	Connection Type	Height	Volume	Weight	Maximum Acceptance Volume	Includes
TK30PV100FM/U	SuperVent: 1 in.; Tank: 1/2 in.	Tank: Male NPT; SuperVent: Female NPT	15 1/2 in. (394 mm)	4.4 gal. (16.7 L)	16 lb (7.3 kg)	2.5 gal. (9.5 L)	TK300-30, PV100, SCV-050, FM911
TK30PV100SFM/U	SuperVent: 1 in.; Tank: 1/2 in.	Tank: Male NPT; SuperVent: Sweat	15 1/2 in. (394 mm)	4.4 gal. (16.7 L)	16 lb (7.3 kg)	2.5 gal. (9.5 L)	TK300-30, PV100S, SCV-050, FM911
TK30PV125FM/U	SuperVent: 1 1/4 in.; Tank: 1/2 in.	SuperVent: Female NPT; Tank: Male NPT	15 1/2 in. (394 mm)	4.4 gal. (16.7 L)	16.8 lb (7.6 kg)	2.5 gal. (9.5 L)	TK300-30, PV125, SCV-050, FM911
TK30PV125SFM/U	SuperVent: 1 1/4 in.; Tank: 1/2 in.	Tank: Male NPT; SuperVent: Sweat	15 1/2 in. (394 mm)	4.4 gal. (16.7 L)	16.8 lb (7.6 kg)	2.5 gal. (9.5 L)	TK300-30, PV125S, SCV-050, FM911
TK60PV100SFMNC/U	SuperVent: 1 1/4 in.; Tank: 1/2 in.	Tank: Male NPT; SuperVent: Female NPT	23 in. (584 mm)	4.4 gal. (16.7 L)	15.3 lb (6.9 kg)	2.5 gal. (9.5 L)	TK300-60, PV100S, FM911
TK60PV125FMNC/U	SuperVent: 1 1/4 in.; Tank: 1/2 in.	Tank: Male NPT; SuperVent: Female NPT	23 in. (584 mm)	7.5 gal. (28.8 L)	17.5 lb (7.95 kg)	2.5 gal. (9.5 L)	TK300-60, PV125, FM911

Boiler Trim Kit with Air Purger

Honeywell TK Series Boiler Trim kits are convenient when doing a boiler change out. They include expansion tank, air purger and air vent; selected models include FM911 combination boiler fill valve/ backflow preventer and/or service check valves.

Maximum Safe Operating Pressure (psi): 100 psi
Maximum Safe Operating Pressure (kPa): 689 kPA
Operating Temperature Range: 240°F Maximum (115°C Maximum)
Diameter: 11 in. (279 mm)

Material Number	Connection Size (in.)	Connection Type	Height	Volume	Weight	Maximum Acceptance Volume	Includes
TK300-30A-1FM/U	Tank: 1/2 in.; Air Purger: 1 in.	Tank: Male NPT; Air Purger: Female NPT	15 1/2 in. (394 mm)	4.4 gal. (16.7 L)	16.6 lb (7.5 kg)	2.5 gal. (9.5 L)	TK300-30, AP400, FV180, SCV-0125, SCV-050, FM911
TK300-30A-2FM/U	Air Purger: 1 1/4 in.; Tank: 1/2 in.	Tank: Male NPT; Air Purger: Female NPT	15 1/2 in. (394 mm)	4.4 gal. (16.7 L)	16.6 lb (7.5 kg)	2.5 gal. (9.5 L)	TK300-30, AP401, FV180, SCV-0125, SCV-050, FM911

V135 Thermostatic Mixing or Diverting Valves

Thermostatic Mixing or Diverting Valves for use in hydronic heating systems as a three-way mixing or diverting valve; controls loop temperature in radiant heating systems.

- Includes plastic handle for manual operation.
- Knurled ring on T100R control head for easy attachment to V135.

Application: Thermostatic mixing/diverting valve for use in hydronic heating systems. Controls loop temperature in radiant heating systems.
Capacity: Standard
Temperature Range: 248°F Maximum (120°C Maximum)
Collar Diameter: 1 3/16 in. (30 mm)
Materials (Body): Bronze
Pressure Ratings (psi): Steam – 232 psi maximum
Pressure Ratings (kPa): Steam – 1601 kPa
Maximum Differential Pressure Ratings (Close-off) (psi): 17 psi maximum

Material Number	Approximate, Dimensions	Pipe Size (inch)	Pipe Size (DN)	Body Pattern	Capacity (Cv)	Connection Type	Used With
V135A1006	2 9/16 in. x 5 1/8 in. (64 mm x 128 mm)	3/4 in.	DN20	Three-way	3.7 Cv	Sweat	T100R
V135A1014	2 15/16 in. x 5 13/16 in. (74 mm x 148 mm)	1 in.	DN25	Three-way	5.8 Cv	Sweat	T100R
V135A1063	3 3/8 in. x 6 3/8 in. (86 mm x 162 mm)	1 1/4 in.	DN32	Three-way	5.8 Cv	Sweat	T100R

T100R Thermostatic Mixing or Diverting Valve Actuator

For use in hydronic heating systems with V135 Valves in a three-way mixing or diverting application. Controls loop temperature in radiant heating systems.

- T100R Thermostatic Actuator includes strap-on-pipe sensor.
- Knurled ring on T100R control head for easy attachment to V135.

Collar Diameter: 1 3/16 in. (30 mm)
Used With: V135

Material Number	Application	Capillary Length	Temperature Range	Sensor (Integral or Remote)	Setpoint (Integral or Remote)
T100R1004	Thermostatic Radiator Controller for use with V135 valve body for diverting or mixing applications.	6 ft. 8 in. (2 m)	50°F to 122°F (10°C to 50°C)	Remote	Remote
T100R1012	Thermostatic Radiator Controller for use with V135 valve body for diverting or mixing applications.	6 ft. 8 in. (2 m)	86°F to 158°F (30°C to 70°C)	Remote	Remote

V110 High Capacity Thermostatic Radiator Valves

V110D

V110E

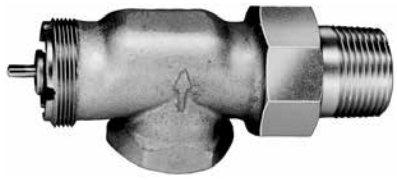

V110F

High Capacity Thermostatic Radiator Valves with T104 Actuators provide control of temperature by modulating the flow of hot water or steam through free-standing radiators, convectors and other heating units with high capacity requirements.

- Designed with the higher capacity normally required by North American heating systems.
- Valve seat disc, which is made of resilient material (EPDM), ensures tight shutoff on steam or hot water systems.
- Nickel-plated bronze casted body with working parts in cartridge insert for ease of service.
- All working parts are replaceable using service tool (MT110C1011) while valve remains in service, in-line, under pressure.
- Valves normally open without control mounted.
- Valves may be used with T104 Thermostatic Actuators.
- Meet ASHRAE Standard 102-1989.

Capacity: high
Temperature Range: 248°F Maximum (120°C Maximum)
Used With: T104
Pressure Ratings (psi): Hot Water – 150 psi maximum; Steam – 15 psi maximum
Pressure Ratings (kPa): Hot Water – 1034 kPa maximum; Steam – 103 kPa
Maximum Differential Pressure Ratings (Close-off) (psi): 17 psi maximum

Material Number	Application	Pipe Size (inch)	Pipe Size (DN)	Body Pattern	Capacity (Cv)	Capacity (Btu / hr - steam)	Connection Type	Materials (Body)	Cartridge Change Tool
V110D1000/U	Precise and automatic control of room temperature in two-pipe systems by modulating the flow of hot water or steam through high capacity heating units.	1/2 in.	DN15	Straight	4.6 Cv	127,000 Btu/hr	Threaded	Nickel Plated Bronze	Yes - Use MT110C1011
V110D1008/U		3/4 in.	DN20	Straight	5.8 Cv	162,000 Btu/hr	Threaded	Nickel Plated Bronze	Yes - Use MT110C1011
V110D1016/U		1 in.	DN25	Straight	7.0 Cv	193,000 Btu/hr	Threaded	Nickel Plated Bronze	Yes - Use MT110C1011
V110D1024/U		1 1/4 in.	DN32	Straight	8 Cv	193,000 Btu/hr	Threaded	Nickel Plated Bronze	Yes - Use MT110C1011
V110E1004/U	Precise and automatic control of room temperature in two-pipe systems by modulating the flow of hot water or steam through high capacity heating units when used with T104 Thermostatic Actuators	1/2 in.	DN15	Angle	4.6 Cv	127,000 Btu/hr	Threaded	Bronze	
V110E1012/U		3/4 in.	DN20	Angle	5.8 Cv	162,000 Btu/hr	Threaded	Bronze	
V110E1020/U		1 in.	DN25	Angle	7.0 Cv	193,000 Btu/hr	Threaded	Bronze	
V110E1028/U		1 1/4 in.	DN32	Angle	8 Cv	193,000 Btu/hr	Threaded	Bronze	
V110F1002/U		1/2 in.	DN15	Horizontal Angle	4.6 Cv	127,000 Btu/hr	Threaded	Bronze	
V110F1010/U		3/4 in.	DN20	Horizontal Angle	5.8 Cv	162,000 Btu/hr	Threaded	Bronze	
V110F1018/U		1 in.	DN25	Horizontal Angle	7.0 Cv	193,000 Btu/hr	Threaded	Bronze	

Dimensions in inches (millimeters)

V110D (Straight Body)

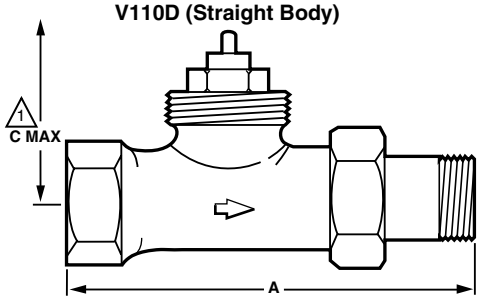

PIPE SIZE	A IN. (MM)	1 C MAX IN. (MM)
1/2 INCH	3-3/4 (95)	4-3/4 (121)
3/4 INCH	4-1/8 (105)	4-3/4 (121)
1 INCH	4-15/16 (125)	4-3/4 (121)
1-1/4 INCH	5-7/8 (149)	5 (127)

1 C MAX DIMENSION IS WITH T104 CONTROL INSTALLED. M18959A

Dimensions in inches (millimeters)

V110E (Angle Body)

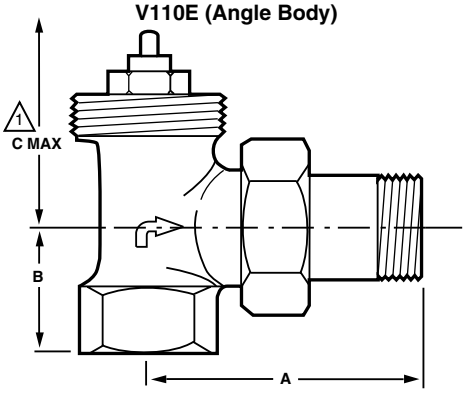

PIPE SIZE	A IN. (MM)	B IN. (MM)	1 C MAX IN. (MM)
1/2 INCH	2-9/16 (65)	1 (25)	4-3/4 (121)
3/4 INCH	2-5/8 (67)	1-1/8 (29)	4-3/4 (121)
1 INCH	3 (76)	1-5/16 (33)	4-3/4 (121)
1-1/4 INCH	3-5/8 (90)	1-11/16 (43)	5 (127)

1 C MAX DIMENSION IS WITH T104 CONTROL INSTALLED. M18960A

Dimensions in inches (millimeters)

V110F (Horizontal Angle Body)

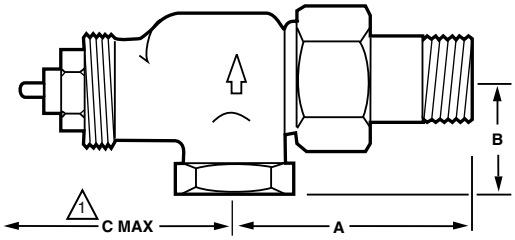

PIPE SIZE	A IN. (MM)	B IN. (MM)	1 C MAX IN. (MM)
1/2 INCH	2-1/4 (57)	1 (25)	5-1/8 (130)
3/4 INCH	2-9/16 (65)	1-1/8 (29)	5-1/4 (133)
1 INCH	2-15/16 (74)	1-3/16 (30)	5-1/4 (133)
1-1/4 INCH	3-1/2 (89)	2-3/16 (56)	5-1/4 (133)

1 C MAX DIMENSION IS WITH T104 CONTROL INSTALLED. M18961A

Typical Installation

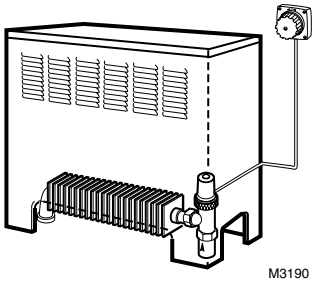

M3190

Typical Installations

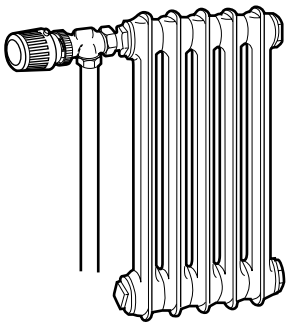

M4632

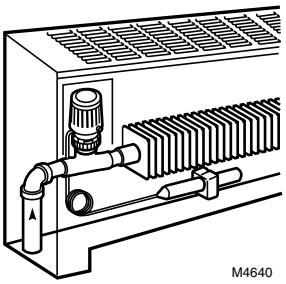

M4640

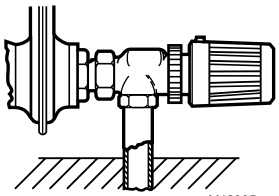

M12935

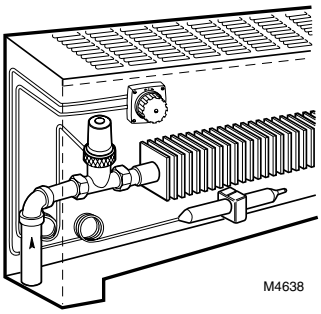

M4638

HR90 TheraPro Electronic Radiator Controller

Honeywell TheraPro HR90 is an electronic radiator controller with a modern design and provides features for convenience and energy saving. It is used as stand-alone controller for radiator heating control applications. For optimized readability of the backlight display the display position can be adjusted as well. The display is switched on as soon as a button is pressed or the wheel is rotated. Fast installation due to the simple lock mechanism closing the device at the radiator valve. Up to 3 pre-set standard time programs are selectable. After the installation the HR90 operates immediately to the factory set program.

- With the auto-window function, the radiator valve is closed when ventilating the room.
- In ECO mode, the room temperature is lowered by 6°F.
- Optimized control of the room temperature by start/stop the radiator controller calculates when to open or closing the valve in order to achieve the desired room temperature at the set time.
- Works with V2040 valves and Danfoss RA valve.

Application: For use on radiators
Controlled Fluid: Water or Steam
Temperature Range (F): 32°F to 122°F
Temperature Range (C): 0°C to 50°C
Scale Markings: Screen
Approximate, Dimensions (in.): 2.4 x 2.1 x 3.8
Approximate, Dimensions (mm): 60 x 54 x 96
Connection Type: M30x1.5
Materials (Body): Polycarbonate
Sensor Range: 40°F to 86°F (5°C to 30°C)
Electrical Ratings: 2 batteries 1,5V: LR6, AA, AM3, Lithium, or 2 rechargeable batteries 1,2V NiMH
Comments: IP30 Protection Class

Material Number	Description	Includes
HR90	Honeywell TheraPro HR90 is an electronic radiator controller with a modern design and provides features for convenience and energy saving.	Controller, Base plate, Display holder, Batteries, Screws, Adapter(s)

T104 High Capacity Thermostatic Radiator Valve Actuators

T104A

T104B

T104C

T104F

T104V

Provide precise and automatic control of room temperature in two-pipe systems by modulating the flow of hot water or steam through free-standing radiators, convectors and other heating units with high capacity requirements.

- Continually monitor and adjust room temperature for consistent comfort and relief from under-heating and overheating.
- Designed with the higher capacity normally required by North American heating systems.
- Valve seat disc, which is made of resilient material (EPDM), ensures tight shutoff on steam or hot water systems.
- Nickel-plated bronze casted body with working parts in cartridge insert for ease of service.
- Controls include sensor, setpoint dial and valve actuator; components may be integral or connected by capillary tubes.
- Require no electrical connections.
- Meet ASHRAE Standard 102-1989.
- 40 mm collar diameter.

Collar Diameter: 1 19/32 in. (40 mm)
Used With: V110

Material Number	Application	Capillary Length	Temperature Range	Sensor (Integral or Remote)	Setpoint (Integral or Remote)	Comments
T104A1040	Self-contained controller with sensor, setpoint dial and valve actuator in one unit. Adjustable limits. Mount horizontal. Not for use inside enclosures or in locations with restricted airflow around sensor. For V110 valves.		43°F to 79°F (6°C to 26°C)	Integral	Integral	Adjustable Limits
T104B1038	Controller with combined remote setpoint and sensor mounted on a wall. Setpoint/sensor connect with a capillary tube to an actuator, which mounts on the valve body. For V110 valves.	6 ft. 8 in. (2 m)	48°F to 79°F (9°C to 26°C)	Remote	Remote	
T104B1046		16 ft (4.9 m)	48°F to 79°F (9°C to 26°C)	Remote	Remote	
T104C1036	Controller with remote setpoint and sensor normally mounted with setpoint dial mounted on outside cabinet or enclosure; sensor mounted beneath heating coils in cold air return. Double capillaries. For V110 valves.	Two 4 1/2 ft (Two 1.4 m)	48°F to 79°F (9°C to 26°C)	Remote	Remote	
T104F1512	Thermostatic radiator valve controller for use with V110 series valves. With remote temperature sensing and integral setpoint. Adjustable limits.	6 ft. 8 in. (2 m)	43°F to 79°F (6°C to 26°C)	Remote	Integral	Adjustable Limits

Dimensions in inches (millimeters)

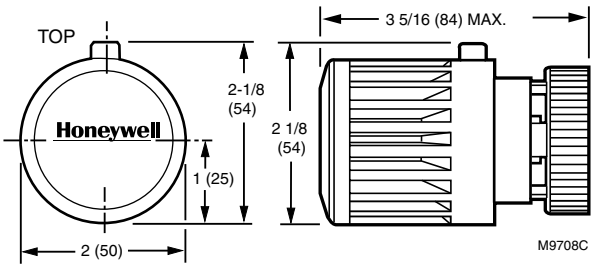

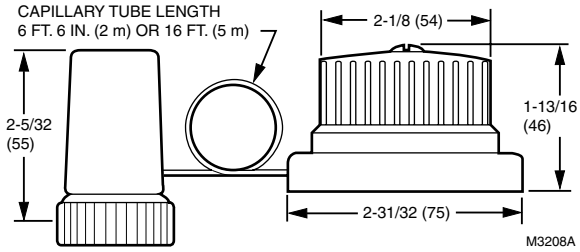

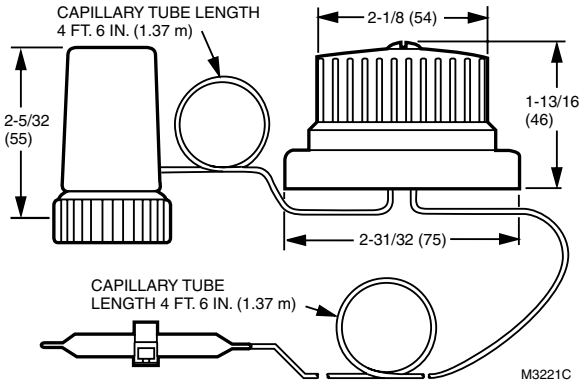

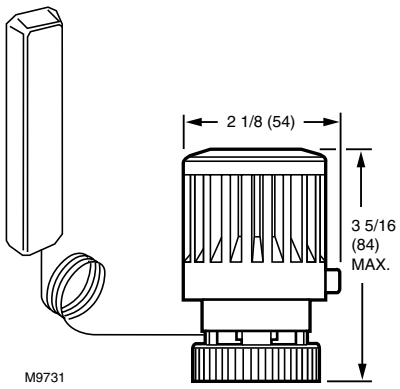

T104V

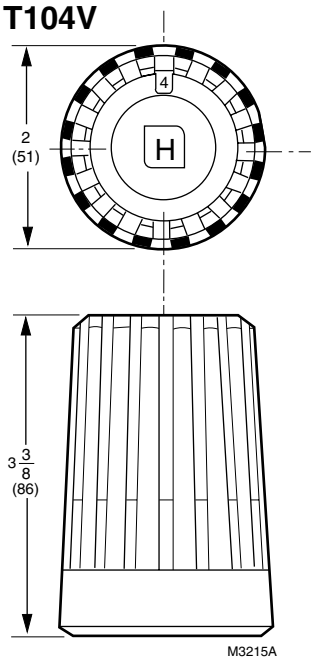

V2000 Series Valve Bodies Cross Reference to V100 Series

Use T100 Actuators With New V2000 Series Valve Bodies

V2000 Series (Current)	V100 Series (Obsolete)	Product Description
V2040DSL15	V100D1056	1/2 in. TRV Straight Body, Female NPT Inlet, Male NPT Tail-piece Outlet
V2040DSL20	V100D1064	3/4 in. TRV Straight Body, Female NPT Inlet, Male NPT Tail-piece Outlet
V2040DSL25	V100D1072	1 in. TRV Straight Body, Female NPT Inlet, Male NPT Tail-piece Outlet
V2040ESL15	V100E1055	1/2 in. TRV Vertical Body, Female NPT Inlet, Male NPT Tail-piece Outlet
V2040ESL20	V100E1063	3/4 in. TRV Vertical Body, Female NPT Inlet, Male NPT Tail-piece Outlet
V2040ESL25	V100E1071	1 in. TRV Vertical Body, Female NPT Inlet, Male NPT Tail-piece Outlet
V2040ASL15	V100F1054	1/2 in. TRV Horizontal, Female NPT Inlet, Male NPT Tail-piece Outlet
V2040ASL20	V100F1062	3/4 in. TRV Horizontal, Female NPT Inlet, Male NPT Tail-piece Outlet
V2040ASL25	V100F1070	1 in. TRV Horizontal, Female NPT Inlet, Male NPT Tail-piece Outlet
V200LDSL15	V100G5054	1/2 in. TRV Straight Body, Sweat Inlet, Sweat Outlet No Tail-piece
V200LDSL20	V100G5062	3/4 in. TRV Straight Body, Sweat Inlet, Sweat Outlet No Tail-piece
V2042HSL10	V100P1046	1/8 in. TRV (1/2 in. Body With 1/8 in. Adapter) Male NPT Inlet, Female NPT Outlet. One Pipe Steam
V2043HSL10	Y100P1001	1/8 in. TRV (1/2 in. Body With 1/8 in. Adapter) Male NPT Inlet, Female NPT Outlet. One Pipe Steam Includes SA123A1003
VS1200SL01		Replacement Cartridge New V2000 Series

V200; V2000 Series Standard Capacity Thermostatic Radiator Valves Body

V200LD

V2040D

V2040A, V2040E
(Straight body)

V2040E
(Angle body)

One-Pipe Steam Thermostatic Radiator Valves - Allow automatic temperature control in one-pipe steam or hot water systems for free standing radiators, convectors and other heating units with standard capacity requirements.

- Continually monitors and adjusts room temperature for consistent comfort and relief from under-heating and overheating.
- Adjustable balancing cartridge design made from resilient material (EPDM), ensures tight shut-off on steam and hot water systems.
- Nickel plated brass casted body.
- Replaceable cartridge for easy service with service tool.
- Controls include valve body, steam air vent.
- Used with T100 set point and capillary actuators.
- No electrical connection required for non-electric actuators.
- Normally open without control mounted.

Capacity: Standard
Temperature Range: 248°F Maximum (120°C Maximum)
Materials (Body): Nickel Plated Bronze
Cartridge Change Tool: Yes - Use VA8200A001
Pressure Ratings (psi): Hot Water – 150 psi maximum; Steam – 15 psi maximum
Pressure Ratings (kPa): Hot Water – 1034 kPa maximum; Steam – 103 kPa
Maximum Differential Pressure Ratings (Close-off) (psi): With T100 or T200: 15 psi, With MV100: 36 psi, For low noise: 3 psi
Maximum Differential Pressure Ratings (Close-off) (kPa): With T100 or T200: 103 kPa, With MV100: 248 kPa, For low noise: 20 kPa

Material Number	Application	Pipe Size (inch)	Pipe Size (DN)	Body Pattern	Capacity (Cv)	Capacity (Btu / hr - steam)	Connection Type	Connection Size	Used With
V200LDSL15	For baseboards and other installations with copper tubing.	1/2 in.	DN15	Straight	2.5 Cv	59,100 Btu/hr	Inlet – NPT; Outlet – Sweat both ends, no union	1/2 in.	T100
V200LDSL20		3/4 in.	DN20	Straight	2.7 Cv	63,800 Btu/hr	Inlet – NPT; Outlet – Sweat both ends, no union	3/4 in.	T100
V2040ASL15	Replaces most manual valves with minimum piping changes.	1/2 in.	DN15	Horizontal Angle	2.5 Cv	59,100 Btu/hr	Inlet – NPT; Outlet – Threaded	1/2 in.	T100A, M and V controls to conform to horizontal mounting requirements
V2040ASL20		3/4 in.	DN20	Horizontal Angle	2.7 Cv	63,800 Btu/hr	Inlet – NPT; Outlet – Threaded	3/4 in.	T100A, M and V controls to conform to horizontal mounting requirements
V2040ASL25		1 in.	DN25	Horizontal Angle	2.7 Cv	70,500 Btu/hr	Inlet – NPT; Outlet – Threaded	1 in.	T100A, M and V controls to conform to horizontal mounting requirements
V2040DSL15	Especially suited for baseboards and straight runs where manual valves were not originally installed.	1/2 in.	DN15	Straight	2.5 Cv	59,100 Btu/hr	Inlet – NPT; Outlet – Threaded	1/2 in.	
V2040DSL20		3/4 in.	DN20	Straight	2.7 Cv	63,800 Btu/hr	Inlet – NPT; Outlet – Threaded	3/4 in.	
V2040DSL25		1 in.	DN25	Straight	2.7 Cv	70,500 Btu/hr	Inlet – NPT; Outlet – Threaded	1 in.	
V2040ESL15	Use where installation space is limited	1/2 in.	DN15	Angle	2.5 Cv	59,100 Btu/hr	Inlet – NPT; Outlet – Threaded	1/2 in.	T100C, T100B, T100F
V2040ESL20		3/4 in.	DN20	Angle	2.7 Cv	63,800 Btu/hr	Inlet – NPT; Outlet – Threaded	3/4 in.	T100C, T100B, T100F
V2040ESL25		1 in.	DN25	Angle	2.7 Cv	70,500 Btu/hr	Inlet – NPT; Outlet – Threaded	1 in.	T100C, T100B, T100F

Thermostatic Radiator Valves and Actuators

Dimensions in inches (millimeters)

V200LD (Straight Body)

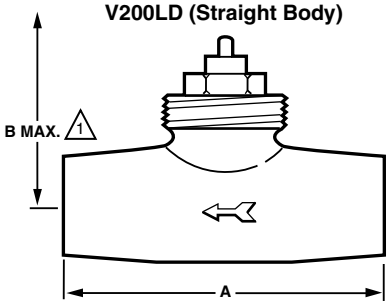

PIPE SIZE	A IN. (MM)	1 B MAX IN. (MM)
1/2 INCH	2-5/8 (66)	4-1/16 (104)
3/4 INCH	2-15/16 (74)	4-1/16 (104)

1 B MAX DIMENSION IS WITH T100A CONTROL INSTALLED.

M12933C

V2040D (Straight Body)

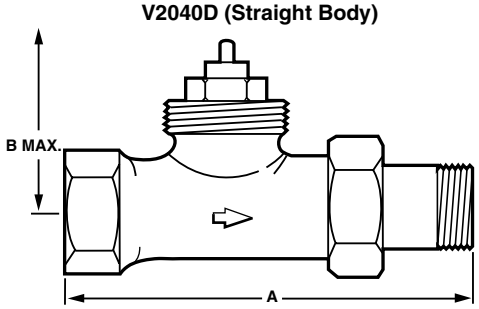

PIPE SIZE	A IN. (MM)	1 B MAX IN. (MM)
1/2 INCH	3-3/4 (95)	4-1/6 (104)
3/4 INCH	4-3/16 (106)	4-1/6 (104)
1 INCH	4-1/2 (114)	4-1/2 (114)

1 B MAX DIMENSION IS WITH T100A CONTROL INSTALLED.

M12930D

V2040A (Horizontal Angle Body)

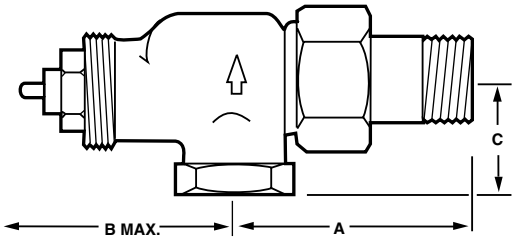

PIPE SIZE	A IN. (MM)	1 B MAX IN. (MM)	C IN. (MM)
1/2 INCH	2-1/8 (54)	4-1/2 (115)	1-1/8 (29)
3/4 INCH	2-1/2 (64)	5-3/16 (132)	1-3/16 (31)
1 INCH	2-15/16 (74)	5-3/16 (132)	1-7/16 (37)

1 B MAX DIMENSION IS WITH T100A CONTROL INSTALLED.

M12932C

V2040E (Angle Body)

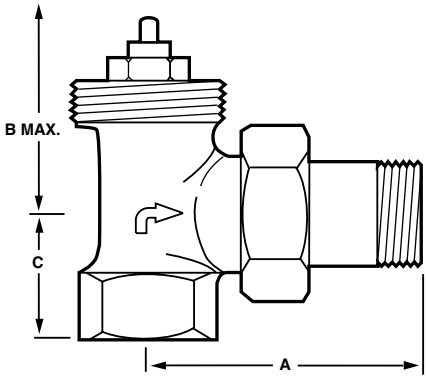

PIPE SIZE	A IN. (MM)	1 B MAX IN. (MM)	C IN. (MM)
1/2 INCH	2-5/16 (58)	3-13/16 (97)	1 (25)
3/4 INCH	2-5/8 (66)	3-13/16 (97)	1-1/8 (29)
1 INCH	2-15/16 (74)	4-5/16 (110)	1-5/16 (34)

1 B MAX DIMENSION IS WITH T100A CONTROL INSTALLED.

M12931D

Typical Installation

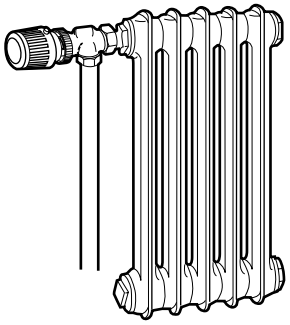

M4632

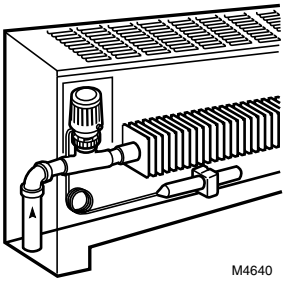

M4640

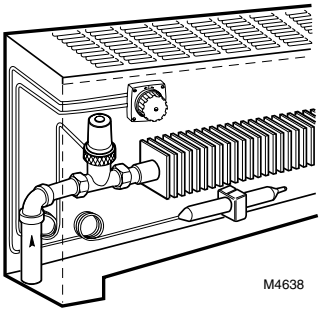

M4638

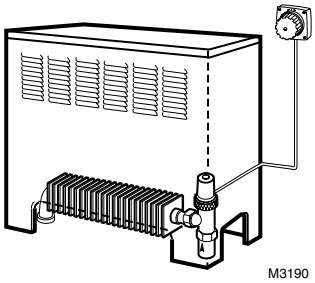

M3190

T100 Standard Capacity Thermostatic Radiator Actuators

T100B

T100C

T100F

Allow automatic temperature control in two-pipe steam or hot water systems for free standing radiators, convectors, and other heating units with standard capacity requirements. Provide comfort and energy savings at affordable prices.

- Continually monitor and adjust room temperature for consistent comfort and relief from under-heating and overheating.
- Valve seat disc, which is made of resilient material (EPDM), ensures tight shutoff on steam or hot water systems.
- Nickel-plated brass casted body with working parts in cartridge insert for ease of service.
- Controls include sensor, setpoint dial and valve actuator; components may be integral or connected by capillary tubes.
- Require no electrical connections.
- All working parts are replaceable using service tool (MT100C1016) while valve remains in service, in-line, under pressure.
- Valves normally open without control mounted.
- Valves may also be used with MV100 Electric Zone Valve Actuator.

Collar Diameter: 1 3/16 in. (30 mm)
Used With: V100, V2000

Material Number	Application	Capillary Length	Temperature Range	Sensor (Integral or Remote)	Setpoint (Integral or Remote)	Replaces	Comments
T1002W0NA	A self-contained control with sensor, setpoint dial and valve actuator in one unit. Mounts horizontal. Not for use inside enclosures or where airflow around sensor is restricted. Adjustable limits.		43°F to 79°F (6°C to 26°C)	Integral	Integral	American Steam - 02-100-00. Taco - 5202. Danfoss RA2000 - 013G8200. Ammark - 72.TM Macon - TM B22000. NT Macon - NTB B24000. (in combination with V2000)	Adjustable Limits
T100B1035	A control with combined remote setpoint and sensor mounted on wall. Connected by a capillary tube to an actuator, which is mounted on the valve body.	6 1/2 ft (2 m)	48°F to 79°F (9°C to 26°C)	Remote	Remote	American Steam - 02-300-00. Taco - 5206. Danfoss RA2000 - 013G8262. Ammark - 76. TM Macon - TML B42000. NT Macon - NTL B45000. in combination with V2000	
T100B1043	A control with combined remote setpoint and sensor mounted on wall. Connected by a capillary tube to an actuator, which is mounted on the valve body.	16 ft (5 m)	48°F to 79°F (9°C to 26°C)	Remote	Remote	Taco - 5207. Danfoss RA2000 - 013G8265. Ammark - 76L. (in combination with V2000)	
T100C1026	A control with remote setpoint and sensor mounted with setpoint dial on outside of heating cabinet; sensor mounted beneath heating coils in cold air return. Dual capillary.	Two 4 1/2 ft (Two 1.4 m)	48°F to 79°F (9°C to 26°C)	Remote	Remote	American Steam - 02-320-00. Taco - 5211. Danfoss RA2000 - 013G8233. Ammark - 74. TM Macon - TMLZ B52000. NT Macon - NTL B55000. (in combination with V2000)	
T100F1395	A control with remote temperature sensing and integral setpoint. Adjustable limits.	6 ft. 8 in. (2 m)	43°F to 79°F (6°C to 26°C)	Integral	Integral	American Steam - 02-120-00. Taco - 5203. Danfoss RA2000 - 013G8202. Ammark - 73. TM Macon - TMZ B32000. NT Macon - NTZ B35000. (in combination with V2000)	Adjustable Limits

Dimensions in inches (millimeters)

T100B

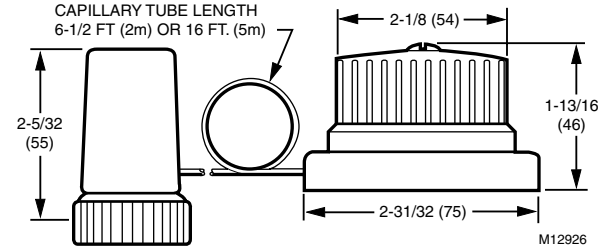

T100F

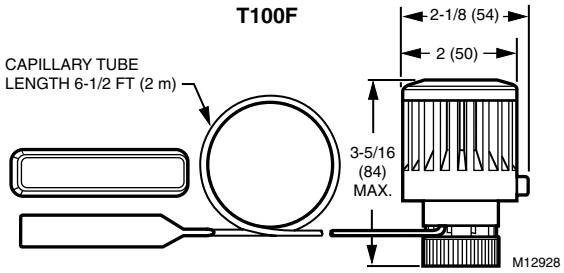

T100C

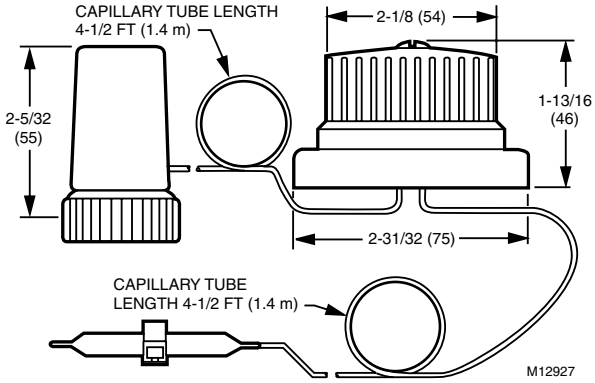

T1002W

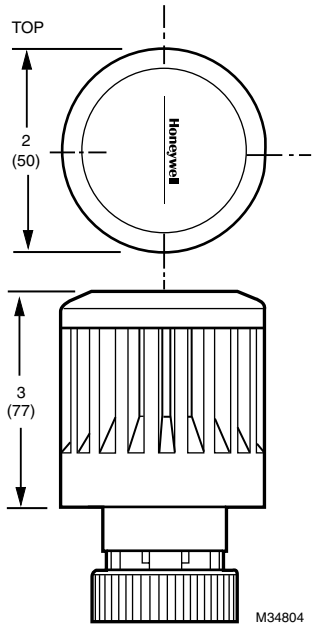

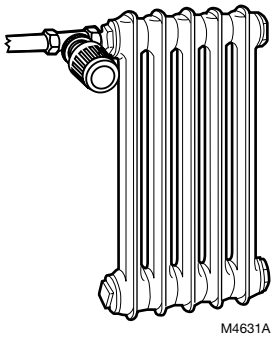

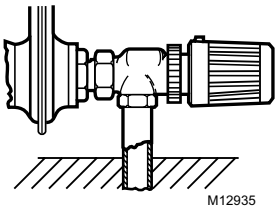

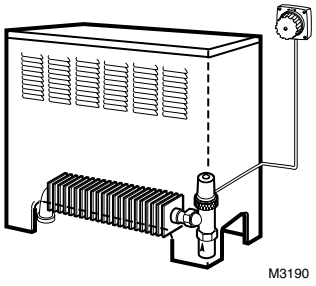

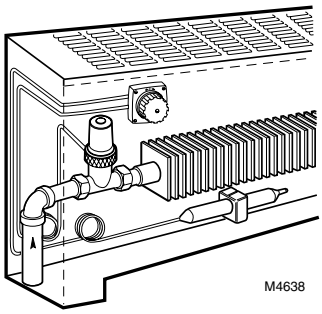

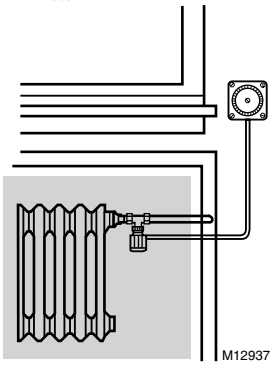

V2042H; V2043H One-pipe Steam Thermostatic Radiator Valve

One-Pipe Steam Thermostatic Radiator Valves - Allow automatic temperature control in one-pipe steam or hot water systems for free standing radiators, convectors and other heating units with standard capacity requirements.

- Continually monitors and adjusts room temperature for consistent comfort and relief from under-heating and overheating.
- Adjustable balancing cartridge design made from resilient material (EPDM), ensures tight shut-off on steam and hot water systems.
- Nickel plated brass casted body.
- Replaceable cartridge for easy service with service tool.
- Controls include valve body, steam air vent.
- Used with T100 set point and capillary actuators.
- No electrical connection required for non-electric actuators.
- Normally open without control mounted.

Application: Use for one pipe steam applications.
Pipe Size (inch): 1/8 in.
Body Pattern: Angle
Capacity: Standard
Temperature Range: 248°F Maximum (120°C Maximum)
Connection Type: Inlet – NPT; Outlet – Threaded
Connection Size (in.): 1/8 in.

Materials (Body): Nickel Plated Bronze
Cartridge Change Tool: Yes - Use VA8200A001
Used With: T100
Maximum Differential Pressure Ratings (Close-off) (psi): With T100 or T200: 15 psi, With MV100: 36 psi, For low noise: 3 psi
Maximum Differential Pressure Ratings (Close-off) (kPa): With T100 or T200: 103 kPa, With MV100: 248 kPa, For low noise: 20 kPa

Material Number	Pressure Ratings (psi)	Pressure Ratings (kPa)	Includes
V2042HSL10	Steam – 15 psi maximum	Steam – 103 kPa maximum	
V2043HSL10	Steam – Valve: 15 psi maximum; Vent: 6 psi maximum	Steam – Valve: 103 kPa maximum; Vent: 41 kPa maximum	V2042HSL10 plus steam/air vent

Dimensions in inches (millimeters)

V2042H (Body)/V2043H (Body with Vent)

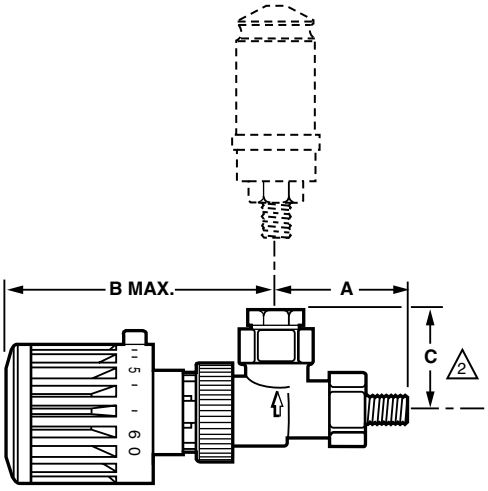

PIPE SIZE	A IN. (MM)	1 B MAX IN. (MM)	2 C IN. (MM)
3/8 INCH	1-11/16 (43)	3-13/16 (97)	1-3/16 (31)

1 B MAX DIMENSION IS WITH T100A CONTROL INSTALLED.

2 C DIMENSION IS WITHOUT THE STEAM/AIR VENT INSTALLED.

M17016B

Typical Installation

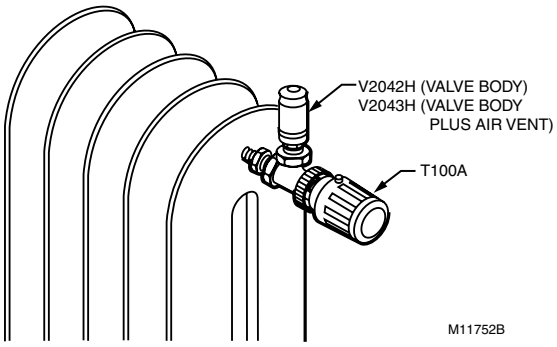

M11752B

Typical Installation

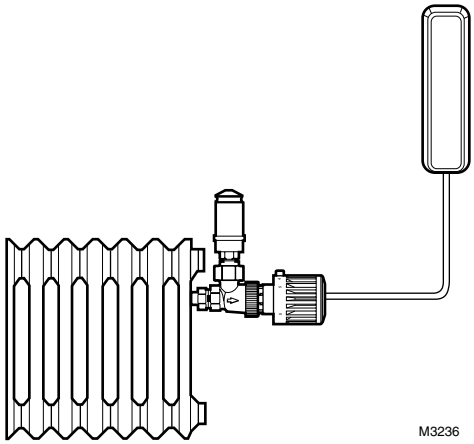

M3236

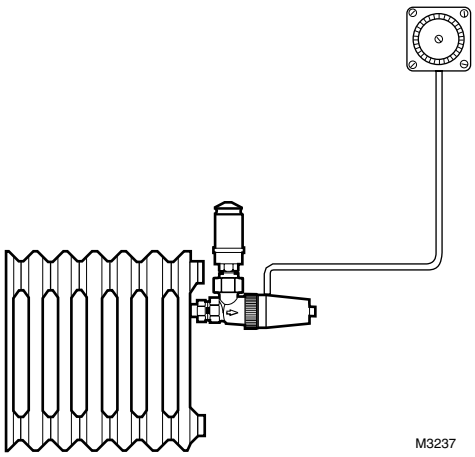

M3237

Hydronic Controls

V2000 Series Thermostatic Radiator Valve Accessories

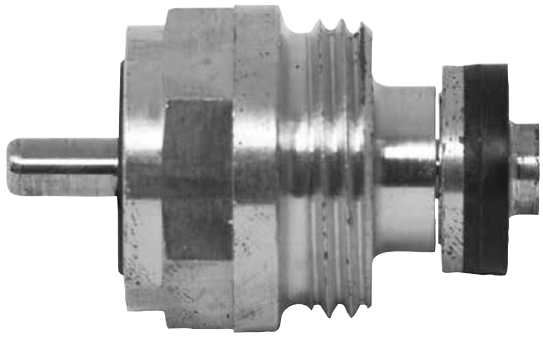

Approximate, Dimensions: (95 mm length)
Materials (Body): Bronze
Cartridge Change Tool: VA8200A001

V2000 Series Cartridge Balancing Procedure Step 1

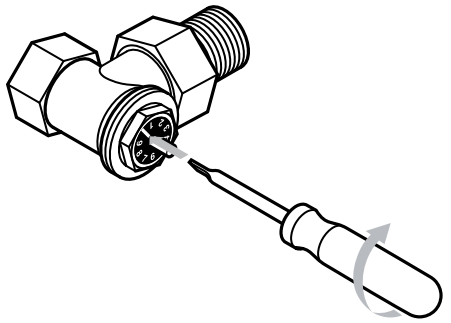

M22687

V2000 Series Cartridge Balancing Procedure Step 2

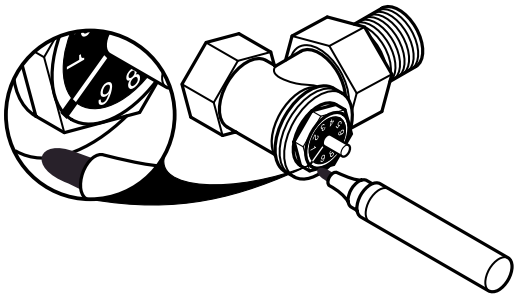

M22688

V2000 Series Cartridge Balancing Procedure Step 3

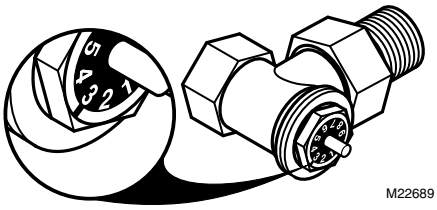

M22689

V2000 Series Cartridge Balancing Procedure Step 4

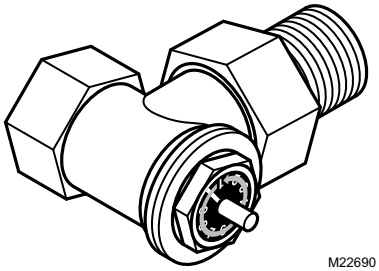

M22690

Material Number	Application	Description	Used With
VS1200SL01	Accessory or Replacement Part	Replacement cartridge for NEW V2000 (adjustable cartridge)	T100

MT100; MT110 Cartridge Changing Tool

The MT110 Valve Cartridge Changing Tool enables the user to remove, and clean or replace the valve cartridge while the valve remains pressurized. Boiler shutdown is not required.

- MT110 for V110 Series valves.

Collar Diameter: 1 19/32 in. (40 mm)

Remove control and loosen valve cartridge slightly.

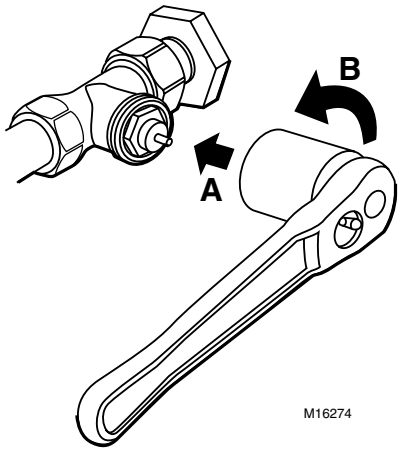

Open shut-off on drain cock, removing excess water and steam from chamber.

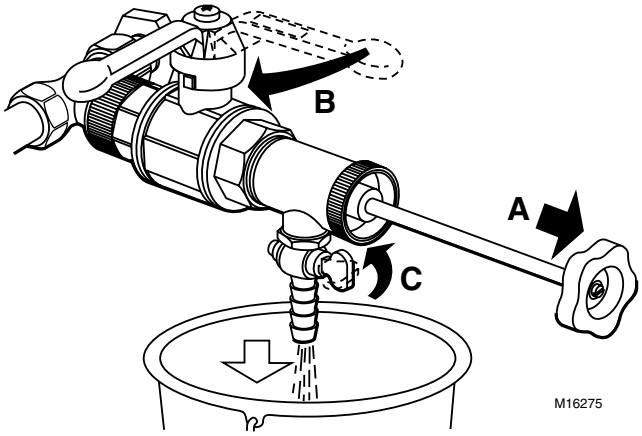

Tighten Cartridge Changer to valve body and close off drain cock.

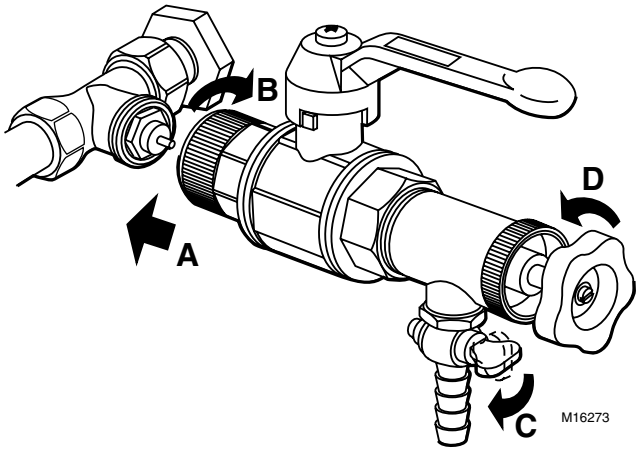

Unscrew end cap and remove cartridge from chamber. Clean or replace cartridge.

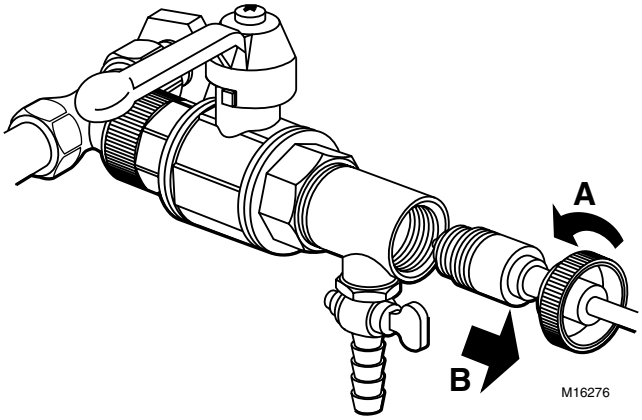

Material Number	Application	Description	Used With
MT110C1011/U	Cartridge changing tool, in service, in line, under pressure for V110 series valve.	Cartridge Changing Tool for in-line service of V110 valves	V100

Thermostatic Valve Accessories

Used With: V100 Series

Material Number	Description	Used With
CA100B1008	Replacement cartridge for old style V100 (metal cartridge body)	V100 Series
CA110C1007/U	Replacement Cartridge for V110	V110 Series

Expansion Tank Sizing based on BTU's

Boiler	Type of Radiation			
Net Output in 1000's of BTU/Hr	Finned Tube Baseboard or Radiant Panel	Convectors or Unit Heaters	Radiators Cast Iron	Baseboard Cast Iron
MBH	Use Model	Use Model	Use Model	Use Model
25	TK300-15	TK300-15	TK300-15	TK300-15
50	TK300-15	TK300-15	TK300-30	TK300-30
75	TK300-30	TK300-30	TK300-30	TK300-60
100	TK300-30	TK300-30	TK300-60	TK300-60
125	TK300-30	TK300-60	TK300-60	TK300-90
150	TK300-30	TK300-60	TK300-90	TK300-90
175	TK300-60	TK300-60	XPS-030V	XPS-030V
200	TK300-60	TK300-60	XPS-030V	XPS-030V
250	TK300-60	TK300-90	XPS-030V	XPS-040V
300	TK300-90	XPS-030V	XPS-030V	XPS-040V
350	XPS-030V	XPS-030V	XPS-040V	XPS-060V
400	XPS-030V	XPS-040V	XPS-040V	XPS-060V

TAXV Series Expansion Tanks—Commercial Usage

TAX Series (commercial) Expansion Tanks are designed to absorb hot water expansion in closed heating systems of large installations. TAX tanks are equipped with butyl diaphragms to separate the air from the system water (glycol).

- ASME construction: Horizontal TAX Series tanks.

Maximum Safe Operating Pressure (psi): 125 psi
Maximum Safe Operating Pressure (kPa): 862 kPa
Precharge (psi): 12 psi
Materials: Steel shell; Heavy duty Butyl diaphragm
Operating Temperature Range: 240°F Maximum (115°C Maximum)
Comments: ASME Construction

Material Number	Connection Size (in.)	Diameter	Height	Volume	Weight	Maximum Acceptance Volume
TAXV-015/U	1/2 in.	12 in. (304.8 mm)	19 1/4 in. (489 mm)	7.8 gal (29.6 L)	48 lb (21.8 kg)	2.5 gal (9.5 L)
TAXV-020/U	1/2 in.	12 in. (304.8 mm)	26 in. (660 mm)	10.9 gal (40.2 L)	61 lb (27.7 kg)	2.5 gal (9.5 L)
TAXV-040/U	1/2 in.	16 1/4 in. (412.7 mm)	29 1/2 in. (749 mm)	21.7 gal (82.2 L)	116 lb (52.7 kg)	11.3 gal (42.8 L)
TAXV-060/U	1/2 in.	16 1/4 in. (412.7 mm)	45 1/8 in. (1146 mm)	33.6 gal (127.3 L)	145 lb (65.9 kg)	11.3 gal (42.8 L)
TAXV-080/U	1/2 in.	16 1/4 in. (412.7 mm)	56 in. (1422 mm)	44.4 gal (168.3 L)	70 lb (89.1 kg)	22.6 gal (85.6 L)
TAXV-100/U	1/2 in.	16 1/4 in. (412.7 mm)	68 1/4 in. (1734 mm)	55.7 gal (211 L)	231 lb (105 kg)	22.6 gal (85.6 L)
TAXV-120/U	1 in.	24 in. (609.6 mm)	44 1/4 in. (1124 mm)	68 gal (257.7 L)	233 lb (105.9 kg)	34 gal (128.9 L)
TAXV-144/U	1 in.	24 in. (609.6 mm)	49 1/8 in. (1247.8 mm)	77.0 gal (291.8 L)	256 lb (116.4 kg)	34 gal (128.9 L)
TAXV-180/U	1 in.	24 in. (609.6 mm)	56 1/2 in. (1435 mm)	90 gal (341.1 L)	286 lb (130 kg)	34 gal (128.9 L)
TAXV-200/U	1 in.	24 in. (609.6 mm)	63 in. (1600 mm)	110 gal (416.9 L)	326 lb (148.2 kg)	34 gal (128.9 L)
TAXV-240/U	1 in.	30 in. (762 mm)	49 1/8 in. (1368.4 mm)	132.0 gal (500.3 L)	456 lb (207.3 kg)	46 gal (174.3 L)
TAXV-260/U	1 in.	30 in. (762 mm)	49 1/8 in. (1247.8 mm)	158.0 gal (500.3 L)	435 lb (207.3 kg)	56 gal (174.3 L)
TAXV-280/U	1 in.	30 in. (762 mm)	49 1/8 in. (1247.8 mm)	211.0 gal (500.3 L)	435 lb (207.3 kg)	84 gal (174.3 L)

XPS Series Honeywell Expansion Tanks

XPS Series Expansion Tanks absorb hot water expansion in closed heating systems in larger installations. They have butyl diaphragms to separate clamped design, keep fluids circulating and maintain minimum system pressure.

- For ASME construction consult factory.

Connection Type: Female NPT
Maximum Safe Operating Pressure (psi): 100 psi
Maximum Safe Operating Pressure (kPa): 689 kPA
Materials: Steel shell; Heavy duty Butyl diaphragm
Operating Temperature Range: 240°F Maximum (115°C Maximum)
Comments: Heating

Material Number	Connection Size (in.)	Diameter	Height	Volume	Weight	Maximum Acceptance Volume
XPS-030V/U	1 in.	15 3/8 in. (390.5 mm)	23 7/8 in. (606 mm)	14.0 gal (53.1 L)	25 lb (11.4 kg)	11.3 gal (42.8 L)
XPS-040V/U	1 in.	15 3/8 in. (390.5 mm)	31 5/8 in. (803 mm)	20.0 gal (75.8 L)	33 lb (15 kg)	11.3 gal (42.8 L)
XPS-060V/U	1 in.	15 3/8 in. (390.5 mm)	46 1/2 in. (584 mm)	32 gal (121.3 L)	43 lb (19.5 kg)	11.3 gal (42.8 L)
XPS-090V/U	1 1/4 in.	22 in. (558.8 mm)	36 in. (914 mm)	44 gal (166.8 L)	69 lb (31.4 kg)	34 gal (128.9 L)
XPS-110V/U	1 1/4 in.	22 in. (558.8 mm)	46 3/4 in. (876.3 mm)	62 gal (235 L)	92 lb (41.8 kg)	34 gal (128.9 L)
XPS-160V/U	1 1/4 in.	26 in. (660.4 mm)	47 1/4 in. (1200 mm)	86.0 gal (325.9 L)	123 lb (55.9 kg)	46 gal (174.3 L)

AM-1 Series Thermostatic Mixing Valve

NPT

AM-R "Heating Only"

Sweat

Union Standard and C

Honeywell AM-1 series adjusts, maintains, and limits the hot water temperature settings to provide comfort and protect equipment at home. While increasing the amount of safe, usable hot water, it efficiently offers anti-scald, anti-chill protection.

- Features dual purpose mixing or diverting values
- Offers constant water temperature under changing operating conditions
- Temperature is limited at any point and if cold water supply is interrupted, flow reduction occurs in seconds
- Provides reliable performance at minimum flow of 05 gpm and proportional valve for simultaneous control of hot and cold
- Maximum pressure 150 psi and maximum temperature of 212°F (100°C)
- Tamper-resistant design with nickel-plated brass construction and EPDM O-rings
- Designed for easy maintenance and Teflon® coating prevents mineral build-up and extends life
- Lead free products have products numbers end in LF

Applications: Domestic water; Nursing homes; Public facilities; Automatic faucets; Radiant floor heating; Space heating; Combo systems; Solar hot water; Greenhouses; Industrial applications; Photo processing

Pressure Drop Chart

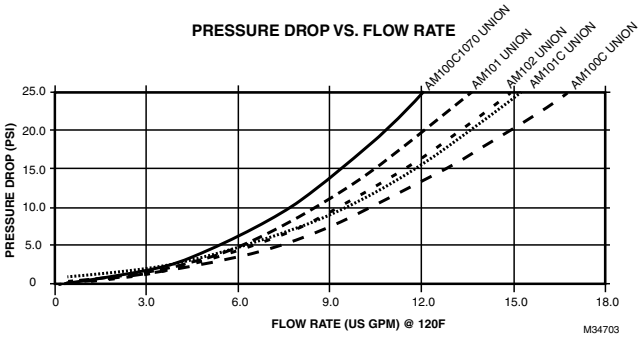

Material Number	Pipe Size in/(DN)	Connection Type	Capacity (Cv)	Operating Temperature °F (°C)	Approvals, ASSE	Comments	Includes
AM100-1LF/U	1/2 in. (DN15)	NPT	3.2 Cv	70°F to 145°F (21°C to 63°C)	1017	Low lead Content <.25% by weighted average	
AM100C1070UCPVC1LF	1/2 in. (DN15)	Union CPVC	1.8 Cv	70°F to 120°F (21°C to 49°C)	1070	Low lead Content <.25% by weighted average	Check valves on hot and cold ports
AM100C1070-UPEX1LF	1/2 in. (DN15)	Union PEX	1.8 Cv	70°F to 120°F (21°C to 49°C)	1070	Low lead Content <.25% by weighted average	
AM100C1070-US-1LF	1/2 in. (DN15)	Union Sweat	1.8 Cv	70°F to 120°F (21°C to 49°C)	1070	Low lead Content <.25% by weighted average	
AM100C1070-UT-1LF	1/2 in. (DN15)	Union NPT	1.8 Cv	70°F to 120°F (21°C to 49°C)	1070	Low lead Content <.25% by weighted average	
AM100C-1LF/U	1/2 in. (DN15)	NPT	3.2 Cv	70°F to 120°F (21°C to 49°C)	1017	Low lead Content <.25% by weighted average	
AM100C-UCPVC-1LF/U	1/2 in. (DN15)	Union CPVC	3.9 Cv	70°F to 120°F (21°C to 49°C)	1017	Low lead Content <.25% by weighted average	
AM100C-UPEX-1LF/U	1/2 in. (DN15)	Union PEX	3.9 Cv	70°F to 120°F (21°C to 49°C)	1017	Low lead Content <.25% by weighted average	
AM100C-US-1LF/U	1/2 in. (DN15)	Union Sweat	3.9 Cv	70°F to 120°F (21°C to 49°C)	1017	Low lead Content <.25% by weighted average	
AM100C-UT-1LF/U	1/2 in. (DN15)	Union NPT	3.9 Cv	70°F to 120°F (21°C to 49°C)	1017	Low lead Content <.25% by weighted average	Check valves on hot and cold ports
AM100R-UPEX-1/U	1/2 in. (DN15)	Union PEX	3.9 Cv	70°F to 180°F (21°C to 82°C)	No Approval	Heating Only	
AM100R-US-1/U	1/2 in. (DN15)	Union Sweat	3.9 Cv	70°F to 180°F (21°C to 82°C)	No Approval	Heating Only	
AM100R-UT-1/U	1/2 in. (DN15)	Union NPT	3.9 Cv	70°F to 180°F (21°C to 82°C)	No Approval	Heating Only	
AM100-UCPVC-1LF/U	1/2 in. (DN15)	Union CPVC	3.9 Cv	70°F to 145°F (21°C to 63°C)	1017	Low lead Content <.25% by weighted average	CPVC NPT Union

Material Number	Pipe Size in/(DN)	Connection Type	Capacity (Cv)	Operating Temperature °F (°C)	Approvals, ASSE	Comments	Includes
AM100-UPEX-1LF/U	1/2 in. (DN15)	Union PEX	3.9 Cv	70°F to 145°F (21°C to 63°C)	1017	Low lead Content <.25% by weighted average	
AM100-US-1LF/U	1/2 in. (DN15)	Union Sweat	3.9 Cv	70°F to 145°F (21°C to 63°C)	1017	Low lead Content <.25% by weighted average	Check valves on hot and cold ports
AM100-UT-1LF/U	1/2 in. (DN15)	Union NPT	3.9 Cv	70°F to 145°F (21°C to 63°C)	1017	Low lead Content <.25% by weighted average	Check valves on hot and cold ports
AM101-1LF/U	3/4 in. (DN20)	NPT	3.8 Cv	70°F to 145°F (21°C to 63°C)	1017	Low lead Content <.25% by weighted average	
AM101C1070UCPVC1LF	3/4 in. (DN20)	Union CPVC	1.8 Cv	70°F to 120°F (21°C to 49°C)	1070	Low lead Content <.25% by weighted average	
AM101C1070-UPEX1LF	3/4 in. (DN20)	Union PEX	1.8 Cv	70°F to 120°F (21°C to 49°C)	1070	Low lead Content <.25% by weighted average	
AM101C1070-US-1LF	3/4 in. (DN20)	Union Sweat	1.8 Cv	70°F to 120°F (21°C to 49°C)	1070	Low lead Content <.25% by weighted average	
AM101C1070-UT-1LF	3/4 in. (DN20)	Union NPT	1.8 Cv	70°F to 120°F (21°C to 49°C)	1070	Low lead Content <.25% by weighted average	
AM101C-1LF/U	3/4 in. (DN20)	NPT	3.8 Cv	70°F to 120°F (21°C to 49°C)	1017	Low lead Content <.25% by weighted average	
AM101C-UCPVC-1LF/U	3/4 in. (DN20)	Union CPVC	3.9 Cv	70°F to 120°F (21°C to 49°C)	1017	Low lead Content <.25% by weighted average	
AM101C-UPEX-1LF/U	3/4 in. (DN20)	Union PEX	3.9 Cv	70°F to 120°F (21°C to 49°C)	1017	Low lead Content <.25% by weighted average	Check valves on hot and cold ports
AM101C-US-1LF/U	3/4 in. (DN20)	Union Sweat	3.9 Cv	70°F to 120°F (21°C to 49°C)	1017	Low lead Content <.25% by weighted average	Check valves on hot and cold ports
AM101C-UT-1LF/U	3/4 in. (DN20)	Union NPT	3.9 Cv	70°F to 120°F (21°C to 49°C)	1017	Low lead Content <.25% by weighted average	
AM101R-UPEX-1/U	3/4 in. (DN20)	Union PEX	3.9 Cv	70°F to 180°F (21°C to 82°C)	No Approval	Heating Only	
AM101R-US-1/U	3/4 in. (DN20)	Union Sweat	3.9 Cv	70°F to 180°F (21°C to 82°C)	No Approval	Heating Only	
AM101R-UT-1/U	3/4 in. (DN20)	Union NPT	3.9 Cv	70°F to 180°F (21°C to 82°C)	No Approval	Heating Only	
AM101-UCPVC-1LF/U	3/4 in. (DN20)	Union CPVC	3.9 Cv	70°F to 145°F (21°C to 63°C)	1017	Low lead Content <.25% by weighted average	Check valves on hot and cold ports
AM101-UPEX-1LF/U	3/4 in. (DN20)	Union PEX	3.9 Cv	70°F to 145°F (21°C to 63°C)	1017	Low lead Content <.25% by weighted average	
AM101-US-1LF/U	3/4 in. (DN20)	Union Sweat	3.9 Cv	70°F to 145°F (21°C to 63°C)	1017	Low lead Content <.25% by weighted average	
AM101-UT-1LF/U	3/4 in. (DN20)	Union NPT	3.9 Cv	70°F to 145°F (21°C to 63°C)	1017	Low lead Content <.25% by weighted average	Check valves on hot and cold ports
AM102-1LF/U	1 in. (DN25)	NPT	4.3 Cv	70°F to 145°F (21°C to 63°C)	1017	Low lead Content <.25% by weighted average	
AM102C1070-US-1LF	1 in. (DN25)	Union Sweat	1.8 Cv	70°F to 120°F (21°C to 49°C)	1070	Low lead Content <.25% by weighted average	
AM102C-1LF/U	1 in. (DN25)	NPT	4.3 Cv	70°F to 120°F (21°C to 49°C)	1017	Low lead Content <.25% by weighted average	
AM102C-US-1LF/U	1 in. (DN25)	Union Sweat	3.9 Cv	70°F to 120°F (21°C to 49°C)	1017	Low lead Content <.25% by weighted average	
AM102C-UT-1LF/U	1 in. (DN25)	Union NPT	3.9 Cv	70°F to 120°F (21°C to 49°C)	1017	Low lead Content <.25% by weighted average	
AM102R-US-1/U	1 in. (DN25)	Union Sweat	3.9 Cv	70°F to 180°F (21°C to 82°C)	No Approval	Heating Only	
AM102R-UT-1/U	1 in. (DN25)	Union NPT	3.9 Cv	70°F to 180°F (21°C to 82°C)	No Approval	Heating Only	
AM102-US-1LF/U	1 in. (DN25)	Union Sweat	3.9 Cv	70°F to 145°F (21°C to 63°C)	1017	Low lead Content <.25% by weighted average	Check valves on hot and cold ports
AM102-UT-1LF/U	1 in. (DN25)	Union NPT	3.9 Cv	70°F to 145°F (21°C to 63°C)	1017	Low lead Content <.25% by weighted average	
YWAM102R-US-1/U	1 in. (DN25)	Union Sweat	3.9 Cv	70°F to 145°F (21°C to 63°C)	1017		Check valves on hot and cold ports

Mixing Valve Accessories

Material Number	Pipe Size in/(DN)	Connection Type	Operating Temperature °F (°C)	Description	Comments	
AM08-024LF/U	1/2 in. (DN15)	Union NPT	140°F Maximum (60°C Maximum)	Three 1/2 in. NPT Lead-Free Tailpieces	Low lead Content <.25% by weighted average	
AM08-025LF/U	3/4 in. (DN20)	Union NPT	140°F Maximum (60°C Maximum)	Three 3/4 in. NPT Lead-Free Tailpieces	Low lead Content <.25% by weighted average	
AM08-026LF/U	1 in. (DN25)	Union NPT	140°F Maximum (60°C Maximum)	Three 1 in. Lead-free NPT Tailpieces	Low lead Content <.25% by weighted average	
AM09-061LF/U	1/2 in. (DN15)	Union Sweat	140°F Maximum (60°C Maximum)	Three 1/2 in. Lead-free Sweat Tailpieces	Low lead Content <.25% by weighted average	
AM09-062LF/U	3/4 in. (DN20)	Union Sweat	140°F Maximum (60°C Maximum)	Three 3/4 in. Lead-free Sweat Tailpieces	Low lead Content <.25% by weighted average	
AM09-063LF/U	1 in. (DN25)	Union Sweat	140°F Maximum (60°C Maximum)	Three 1 in. Lead-free Sweat Tailpieces	Low lead Content <.25% by weighted average	
AM206-003LF/U	1/2 in. (DN20)	Union PEX	140°F Maximum (60°C Maximum)	Three 1/2 in. Lead-free PEX Tailpieces	Low lead Content <.25% by weighted average	
AM206-004LF/U	3/4 in. (DN20)	Union PEX	140°F Maximum (60°C Maximum)	Three 3/4 in. Lead-free PEX Tailpieces	Low lead Content <.25% by weighted average	
AM206-039/U	1/2 in. (DN20)	Union CPVC	140°F Maximum (60°C Maximum)	1/2 inch CPVC union kit. Includes tailpiece, union nut and gasket		
AM206-040/U	3/4 in. (DN20)	Union CPVC	140°F Maximum (60°C Maximum)	3/4 inch CPVC union kit. Includes tailpiece, union nut and gasket		
AM206-041/U	1/2 in. (DN20)	PEX	140°F Maximum (60°C Maximum)	1/2 inch PEX union kit. Includes tailpiece, union nut and gasket		
AM206-042/U	3/4 in. (DN20)	PEX	140°F Maximum (60°C Maximum)	3/4 inch PEX union kit. Includes tailpiece, union nut and gasket		
CVT-050/U	1/2 in. (DN15)	NPT	140°F Maximum (60°C Maximum)	1/2 in. female NPT x 1/2 in. male NPT Check Adapter. For AM-1 NPT valves		
CVT-075/U	3/4 in. (DN20)	NPT	140°F Maximum (60°C Maximum)	3/4 in. female NPT x 3/4 in. Check Adapter. For AM-1 NPT valves		
TS205-064/U	Use with All Mixing Valves	Adhesive strip	110°F to 140°F (43°C to 60°C)	Thermal Temperature Indicator Strip for Mixing Valve Setup and Outlet Temperature Monitoring. Included in all AM-1 Series STD and C models and AMX Series. Available as separate item	Included in all AM-1 Series STD and C models and AMX Series. Available as separate item	
TS206-080/U	Use with All Mixing Valves	Adhesive strip	105°F to 180°F (41°C to 82°C)	Thermal Temperature Indicator Strip for Mixing Valve Setup and Outlet Temperature Monitoring. Included in all AM-1 Series R models. Available as separate item	Included in all AM-1 Series R models. Available as separate item	

New Style AM-1 Series Valves Replacement Parts

Material Number	Capacity (Cv)	Operating Temperature °F (°C)	Description	
AM-1-020RP/U		80°F to 120°F (C Range); 60°F to 100°F (B Range) (15°C to 38°C (C Range); 27°C to 49°C (B Range))	AM-1 Series B or C Range Element, Spring, Diffuser, and plug assembly	
AM-1-030RP/U		70°F to 120°F (21°C to 49°C)	AM-1 1070 Series element, spring diffuser and plug assembly; AM-1 1070 Series Element, Spring, Diffuser, and plug assembly; Standard and R range	
AMCU-001RP/U	8 Cv	70°F to 120°F (21°C to 49°C)	AM-1 Union model check valve kit. Contains one AMCU100 and O-ring for original AM1 and all AMX100 mixing valves. Contains one AMCU200 and two O-rings for newer AM-1 valves where the check valve fits lush with valve body.	
AMCU100/U	8 Cv	70°F to 120°F (21°C to 49°C)	AM-1 Union check valve for original AM-1 valves where the check valve does not fit flush with valve body. Also for all AMX100 mixing valves. Contains one O-ring	

AMX Series DirectConnect™ Thermostatic Mixing Valves

Sweat or NPT

PEX

Honeywell AMX series DirectConnect™ reduces water heater installation time as the cold and hot port position eliminates the need for typical elbows and tees. Designed for safety to prevent scalding, it also increases user comfort.

- Designed to be directly installed on water heater hot outlet port
- Offers constant water temperature under changing operating conditions
- Temperature is adjustable using 3/16 allen wrench and if cold water supply is interrupted, flow reduction occurs in seconds
- Features brass/stainless construction and Teflon coated wear surfaces
- Heat trapping not required and recirculation portion option allows for fast response
- Lead free products have products numbers end in LF

Applications: Heat Pump Systems; Domestic water; Nursing homes; Public facilities; Automatic faucets; Radiant floor heating; Space heating; Combo systems; Solar hot water; Greenhouses; Industrial applications; Photo processing

Approvals, ASSE: 1017

Pressure Drop Chart

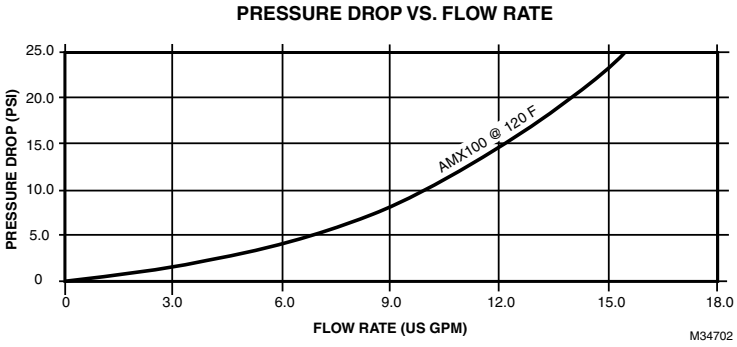

Dimensions in inches

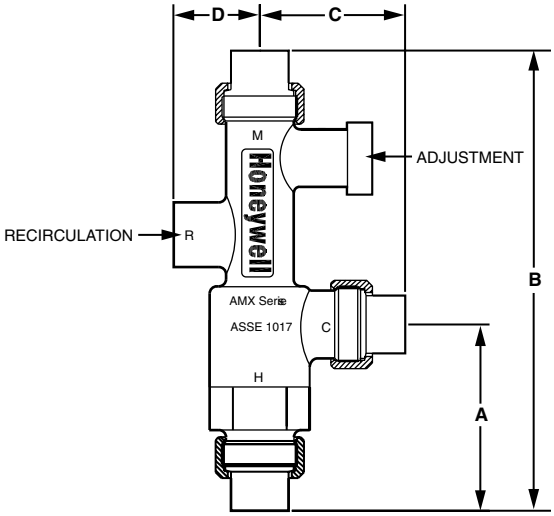

PRODUCT NUMBER	DIMENSIONS (INCHES)			
	A	B	C	D
AMX100-UCPVC-1-LF	3-1/2	8-7/16	2-11/16	1-1/2
AMX100-UPEX-1-LF	3-1/2	8-5/8	2-15/16	1-1/2
AMX100-US-1-LF	3-1/2	8-3/16	2-1/2	1-1/2
AMX100-UT-1-LF	3-1/2	8-1/2	2-13/16	1-1/2
AMX101-UCPVC-1-LF	4-3/16	9	2-1/2	1-1/2
AMX101-UPEX-1-LF	4-3/16	9-3/16	2-11/16	1-1/2
AMX101-US-1-LF	4-3/16	9	2-1/2	1-1/2
AMX101-UT-1-LF	4-3/16	9-11/16	3-1/2	1-1/2
AMX102-US-1-LF	4-1/2	10	3-1/2	1-1/2
AMX102-UT-1-LF	4-1/2	10.3	3-13/16	1-1/2

M27478B

Thermostatic Replacement Mixing Valve Installation

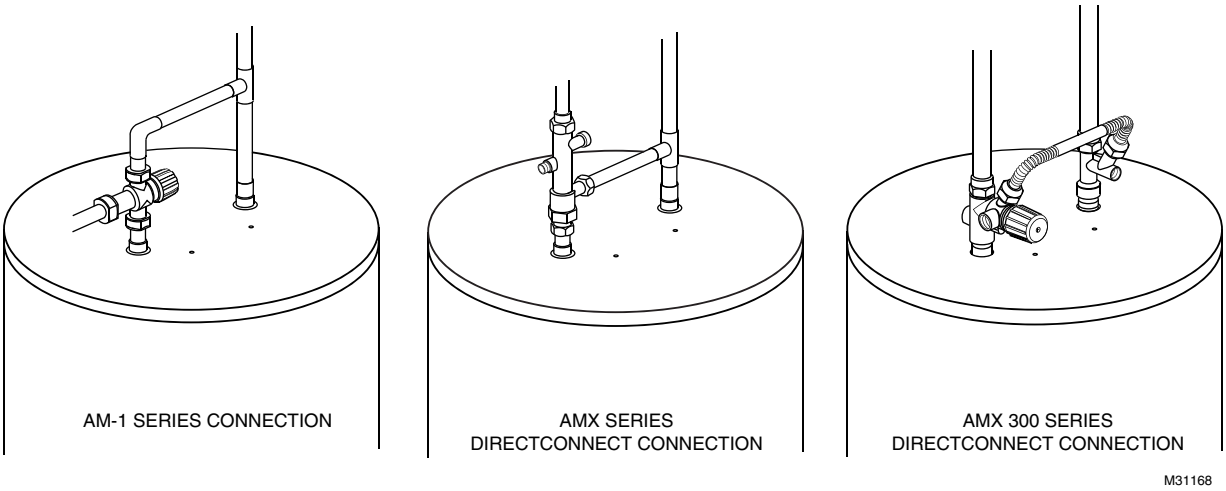

Material Number	Pipe Size in/(DN)	Connection Type	Capacity (Cv)	Operating Temperature °F (°C)	Comments	Includes
AMX100-UCPVC-1LF/U	1/2 in. (DN15)	Union CPVC, 3/4 in. Bottom	4 Cv	90°F to 130°F (32°C to 54°C)	Low lead Content <.25% by weighted average	Check valves on hot and cold ports
AMX100-UPEX-1LF/U	1/2 in. (DN15)	Union PEX, 3/4 in. Bottom	4 Cv	90°F to 130°F (32°C to 54°C)	Low lead Content <.25% by weighted average	3/4" FNPT Inlet, 2 1/2" Union Sweat fittings
AMX100-US-1LF/U	1/2 in. (DN15)	Union Sweat, 3/4 in. Bottom	4 Cv	90°F to 130°F (32°C to 54°C)	Low lead Content <.25% by weighted average	3/4" FNPT Inlet, 2 1/2" Union Sweat fittings
AMX101-UPEX-1LF/U	3/4 in. (DN20)	Union PEX, 3/4 in. Bottom	4 Cv	90°F to 130°F (32°C to 54°C)	Low lead Content <.25% by weighted average	3/4" FNPT Inlet, 2 3/4" Union Sweat fittings
AMX101-US-1LF/U	3/4 in. (DN20)	Union Sweat, 3/4 in. Bottom	4 Cv	90°F to 130°F (32°C to 54°C)	Low lead Content <.25% by weighted average	Check valves on hot and cold ports
AMX101-UT-1LF/U	3/4 in. (DN20)	Union NPT, 3/4 in. Bottom	4 Cv	90°F to 130°F (32°C to 54°C)	Low lead Content <.25% by weighted average	3/4" FNPT Inlet, 2 3/4" Union Threaded fittings
AMX102-US-1LF/U	1 in. (DN25)	Union Sweat, 1 in. Bottom	4 Cv	90°F to 130°F (32°C to 54°C)	Low lead Content <.25% by weighted average	1" FNPT Inlet, 2 1" Union Sweat fittings
AMX102-UT-1LF/U	1 in. (DN25)	Union NPT, 1 in. Bottom	4 Cv	90°F to 130°F (32°C to 54°C)	Low lead Content <.25% by weighted average	1" FNPT Inlet, 2 1" Union Threaded fittings

AMX300 Series DirectConnect™ Thermostatic Mixing Valve and Kits

Honeywell AMX300 series DirectConnect™ kits reduce installation time while providing Honeywell's industry-leading mixing valve technology, which offers excellent temperature stability and control and minimizes scalding risk to building occupants.

- Temperature is adjustable using push-twist-release locking hand wheel design and if cold water supply is interrupted, flow reduction occurs in seconds
- Kit (AMX300TLF or AMX302TLF) includes mixing valve, cold water tee fitting and flexible stainless steel connector. Does NOT include adapters.
- Recirculation portion option offers fast delivery of heated water to the furthest fixtures, increasing user comfort with more available hot water
- The alternate hot port bypasses hot water directly from the tank to non-mixed temperature applications
- Brass/stainless construction with Teflon coated wear surfaces for extended surface
- Lead free products have products numbers end in LF

Applications: Domestic Hot Water
Fluid Temperature: Mixed Water Supply — 100°F to 145°F (Mixed Water Supply — 38°C to 63°C)

Minimum Flow Rate: 0.95 lpm; Recirculation Port: 1/2 in. NPT; Alternate Hot Port: 1/2 in. NPT (0.25 gpm; Recirculation Port: 1/2 in. NPT; Alternate Hot Port: 1/2 in. NPT)
Maximum Safe Operating Pressure (psi): 150 psi

Pressure Drop Chart

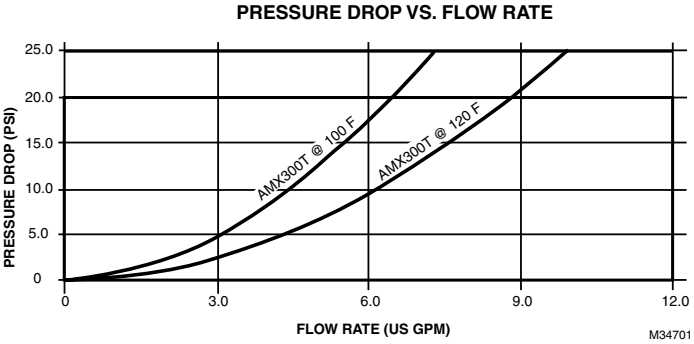

Material Number	Pipe Size in/(DN)	Connection Type	Capacity (Cv)	Operating Temperature °F (°C)	Description	Comments
AMX300TLF/U	1/2 in. (DN15)	Hot Inlet - Female NPT; Mixed Outlet - Male NPT	2.3 Cv	33°F to 80°F (cold water inlet); 100°F to 212°F (hot water inlet) (0.5°C to 27°C (cold water inlet); 38°C to 100 C) (hot water inlet))	DirectConnect water heater kit with 3/4 in. mixing valve, 3/4 in. cold water tee, and 8-in. SS flex connector	Low lead Content <.25% by weighted average
AMX302TLF/U	1 in. (DN25)	Hot Inlet - Female NPT; Mixed Outlet - Male NPT	2.3 Cv	33°F to 80°F (cold water inlet); 100°F to 212°F (hot water inlet) (0.5°C to 27°C (cold water inlet); 38°C to 100°C) (hot water inlet))	DirectConnect water heater kit with 3/4-in. ASSE 1017 mixing valve, 3/4-in. cold water tee, and 11-in. SS flex connector	Low lead Content <.25% by weighted average

AMX Series DirectConnect Replacement Part

Material Number	Capacity (Cv)	Operating Temperature °F (°C)	Description	
AMX-001RP/U		90°F to 130°F (32°C to 54°C)	AMX element, spring, plug assembly. For AMX100 series valves.	
AMX300-008/U		90°F to 130°F (32°C to 54°C)	Replacement 8" flex connector for AMX300T	
AMX300-011/U		90°F to 130°F (32°C to 54°C)	Replacement 11" flex connector for AMX300T	
AM-1-025RP/U		90°F to 130°F (32°C to 54°C)	Thermal element, spring, and plug assembly; Rebuild kit for AM-1 “Standard” (70 -145°F; 21-49°C) series and AMX300 series valves	
AMX300LF/U	2.1 Cv	33°F to 80°F (cold water inlet); 100°F to 212°F (hot water inlet) (0.5°C to 27°C (cold water inlet); 38°C to 100°C) (hot water inlet))	3/4 in. mixing valve (Replacement valve tor AMX300T and AMX302T DirectConnect mixing valve kits.)	

MX Series Large Flow Proportional Mixing or Diverting Valve. Protects People and Equipment, Saves Energy

Threaded

Flanged

The MX Series is a state-of-the-art mixing valve that manages the hot and cold supply based on control settings. Accurate control of temperature provides energy savings, increased comfort and safety. The Teflon wear surfaces prevent calcium buildup.

- Dual purpose mixing or diverting valve.
- Constant water temperature under different operating conditions.
- Proportional valve (control of hot and cold water).
- Flow reduction in seconds if cold water supply is interrupted.
- Maintains temperature with extremely low minimum flows.
- Temperature adjustable, tamper evident.
- Install in any position, heat trapping not required.
- Recirculation connection for fast response.
- Bronze/stainless construction.
- Wear surfaces Teflon coated to prevent deposit build-up.
- Union/tailpiece connections included.
- Tapped flange connections 2-1/2 in. and 3 in.
- Allen wrench for temperature adjustment included.
- ASSE 1017 and CSA listed (Union Models)

Applications: Any application requiring accurate control of hot water temperature based on the mixing of hot and cold water, such as: domestic water for homes, apartment, hotels, schools, nursing homes, offices, public facilities, space heating, radiant floor heating,

Weight (lb): 3.6 lb

Dimensions in inches (millimeters)

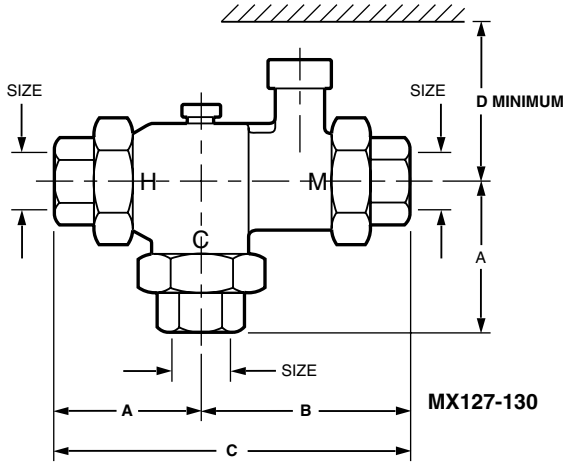

Product Number	Size NPT	Recir Port Size	Dimensions in inches (millimeters)			
			A	B	C	D
MX127	1”	1/2 (13)	2-51/64 (71)	3-45/64 (94)	6-1/2 (165)	6 (152)
MX128	1-1/4”	1/2 (13)	3-19/64 (84)	4-13/32 (112)	7-45/64 (196)	6-29/32 (175)
MX129	1-1/2”	1/2 (13)	3-19/32 (91)	5 (127)	8-19/32 (218)	7 (178)
MX130	2”	1/2 (13)	4-13/64 (107)	5-51/64 (147)	10 (254)	7-19/64 (211)
MX127C	1”	1/2 (13)	2-51/64 (71)	3-45/64 (94)	6-1/2 (165)	6 (152)
MX128C	1-1/4”	1/2 (13)	3-19/64 (84)	4-13/32 (112)	7-45/64 (196)	6-29/32 (175)
MX129C	1-1/2”	1/2 (13)	3-19/32 (91)	5 (127)	8-19/32 (218)	7 (178)
MX130C	2”	1/2 (13)	4-13/64 (107)	5-51/64 (147)	10 (254)	7-19/64 (211)

M23243C

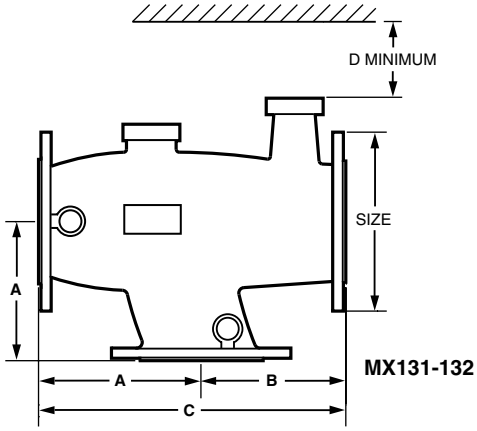

Product Number	Size NPT	Recir Port Size	Dimensions Inches (mm)			
			A	B	C	D
MX131	2-1/2” Flange	1 (25)	5-45/64 (145)	5-45/64 (145)	11-13/32 (290)	4 (102)
MX132	3” Flange	1-1/4 (32)	6-7/64 (155)	6-7/64 (155)	12-13/64 (310)	4 (102)

M27479

Mixing Valves

Pressure Drop Chart

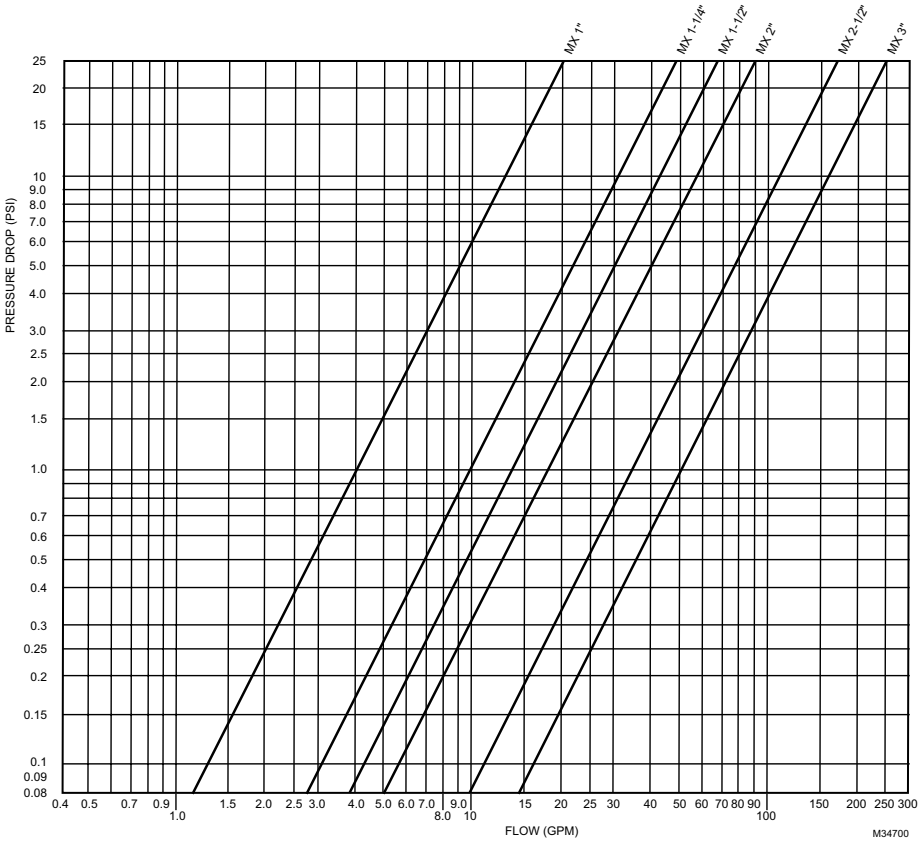

Material Number	Pipe Size in/(DN)	Connection Type	Capacity (Cv)	Operating Temperature °F (°C)	Description	Approvals, ASSE
MX127/U	1 in. (DN25)	NPT	4 Cv	113°F to 149°F (45°C to 65°C)	1 inch NPT MX Mixing Valves	1017
MX127C/U	1 in. (DN25)	NPT	4 Cv	86°F to 113°F (30°C to 45°C)	1 inch NPT MX Mixing Valves	1017
MX128/U	1 1/4 in. (DN32)	NPT	9.3 Cv	113°F to 149°F (45°C to 65°C)	1 1/4 inch MX NPT Mixing Valves	1017
MX128C/U	1 1/4 in. (DN32)	NPT	9.3 Cv	86°F to 113°F (30°C to 45°C)	1 1/4 inch NPT MX Mixing Valves	1017
MX129/U	1 1/2 in. (DN40)	NPT	13.5 Cv	113°F to 149°F (45°C to 65°C)	1 1/2 inch NPT MX Mixing Valves	1017
MX129C/U	1 1/2 in. (DN40)	NPT	13.5 Cv	86°F to 113°F (30°C to 45°C)	1 1/2 inch NPT MX Mixing Valves	1017
MX130/U	2 in. (DN50)	NPT	18 Cv	113°F to 149°F (45°C to 65°C)	2 inch NPT MX Mixing Valves	1017
MX130C/U	2 in. (DN50)	NPT	18 Cv	86°F to 113°F (30°C to 45°C)	2 inch NPT MX Mixing Valves	1017
MX131/U	2 1/2 in. (DN65)	Flanged	34 Cv	113°F to 149°F (45°C to 65°C)	2 1/2 inch Flanged MX Mixing Valves	
MX132/U	3 in. (DN80)	Flanged	50 Cv	113°F to 149°F (45°C to 65°C)	3 inch Flanged MX Mixing Valves	

MX Series Valves Replacement Parts

Material Number	Pipe Size in/(DN)	Description
MX050-RP/U	1/2 in. (DN15)	1/2 in. Recirculation adapter kit MX127 mixing valves. Includes 1/2 in. MNPT union nut and gasket
MX100-RP/U	1 in. (DN25)	Replacement gasket kit for MX127 mixing valves. Includes 3, 1-in. gaskets
MX125-RP/U	1 1/4 in. (DN32)	Replacement gasket kit for MX128 mixing valves. Includes 3, 1-1/4-in. gaskets
MX150-RP/U	1 1/2 in. (DN40)	Replacement gasket kit for MX129 mixing valves. Includes 3, 1-1/2-in. gaskets
MX200-RP/U	2 in. (DN50)	Replacement gasket kit for MX130 mixing valves. Includes 3, 2-in. gaskets
MX250-RP/U	2 1/2 in. (DN65)	Replacement gasket kit for MX131 mixing valves. Includes 3, 2-1/2-in. gaskets
MX300-RP/U	3 in. (DN80)	Replacement gasket kit for MX132 mixing valves. Includes 3, 3-in. gaskets

TX Series Expansion Tanks—Domestic Hot Water

The Honeywell Thermal Expansion Absorber is an expansion tank with a butyl diaphragm. The Thermal Expansion Tank controls pressure build-up in the system, eliminates relief valve spillage, protects fixtures and extends water heater life.

- Heavy duty butyl rubber diaphragm (FDA approved) isolates water from air.
- Polypropylene liner, 100% non-metallic, non-corrosive water reservoir.
- Prevents water hammer.
- Maintenance free.
- Protects water heater from harmful pressure cycling.
- Allows storage of expanded water with no increase in system pressures.
- Prevents backflow when supply pressure falls below system pressure.

Maximum Safe Operating Pressure (psi): 150 psi
Maximum Safe Operating Pressure (kPa): 1034 kPa
Precharge (psi): 40 psi

Operating Temperature Range: 200°F Maximum (93°C Maximum)
Comments: Potable

Material Number	Connection Size (in.)	Connection Type	Diameter	Height	Volume	Weight	Maximum Acceptance Volume	Materials
TX-5/U	3/4 in.	Male NPT	8 in. (203.2 mm)	12 5/8 in. (321 mm)	2.0 gal (7.6 L)	5 lb (2.27 kg)	0.9 gal (3.41 L)	Steel shell; Brass connection; Polypylene liner; Butyl diaphragm
TX-12/U	3/4 in.	Male NPT	11 in. (279 mm)	12 5/8 in. (321 mm)	4.4 gal (16.7 L)	5 lb (2.27 kg)	3.2 gal (12.1 L)	Steel shell; Butyl diaphragm; Polypylene liner; Brass connection
TX-25V/U	3/4 in.	Female NPT	15 3/8 in. (390.5 mm)	19 1/4 in. (489 mm)	10.3 gal (39 L)	23 lb (10.43 kg)	10.3 gal (39 L)	Steel shell; Butyl diaphragm; Brass connection; Polypylene liner
TX-30V/U	3/4 in.	Female NPT	15 3/8 in. (390.5 mm)	23 7/8 in. (606 mm)	14.0 gal (53.1 L)	25 lb (11.34 kg)	11.3 gal (42.8 L)	Steel shell; Brass connection; Polypylene liner; Butyl diaphragm
TX-42V/U	3/4 in.	Female NPT	15 3/8 in. (390.5 mm)	31 5/8 in. (803 mm)	20.0 gal (75.7 L)	33 lb (14.97 kg)	11.4 gal (43.2 L)	Steel shell; Butyl diaphragm; Polypylene liner; Brass connection

DS06 “DialSet” Low Lead Pressure Regulating Valve

With the Honeywell DialSet Pressure Regulating Valve, you don’t need a pressure gauge. The built-in adjustment dial eliminates the need for a gauge when adjusting the static pressure setting, but there is also an easily accessible gauge port on either side if you need it. This product has the capability to be installed by one individual and the reliability that helps to increase your profits through fewer callbacks. Plus, the DialSet PRV has the flexibility to work in a variety of applications.

- Built-In Dial-Set™- no guage is needed to install or set static pressure.
- Noncorroding Unitized Cartridge - contains all working parts and is easily replaceable
- Outlet adjustment range of 25 psi to 90 psi make it suitable for household, commercial, industrial and turf-and-irrigation applications.
- Install it just about anywhere. The internal and external threading allows for use in thread-by-thread, singleunion or double-union configurations.
- 1/4" NPT tap accessible from both sides to validate output
- Built in strainer to simplify maintenance
- Approvals - ASSE 1003, IAPMO, CSA, Low Lead Compliant

Materials: Bronze (body), Fabric Reinforced Diaphragm, Stainless Steel and Engineered Thermoplastics.
Outlet Pressure Adjustment Range (psi): 25-90 psi
Maximum Inlet Pressure Rating (psi): 250 psi
Gauge Tap: 1/4 in. NPT (two, one on each side of body).
Calibrated Adjustment Dial: Yes

Reducing Ratio: 10:1 Maximum
Union Fittings: Double-Union Sweat
Approvals, ASSE: Certified 1003-2009
Approvals, IAPMO: Listed
Approvals, CSA: Certified (B356-10)

Material Number	Pipe Size in/(DN)	Connection Type	Operating Temperature °F (°C)	Description
DS06-100-DUS-LF/U	1/2 in. (DN15)	Female NPT Threaded Inlet & Outlet Externally threaded for Unions	140°F Maximum (60°C Maximum)	1/2 Inch DS06 “dialset” low lead pressure regulating valve (PRV) - double union sweat
DS06-100-DUT-LF/U	1/2 in. (DN15)	Female NPT Threaded Inlet & Outlet Externally threaded for Unions	140°F Maximum (60°C Maximum)	1/2 Inch DS06 “dialset” low lead pressure regulating valve (PRV) - double union NPT
DS06-100-LF/U	1/2 in. (DN15)	Female NPT Threaded Inlet & Outlet Externally threaded for Unions	140°F Maximum (60°C Maximum)	1/2 Inch DS06 “dialset” low lead pressure regulating valve (PRV) - union body only
DS06-100-SUS-LF/U	1/2 in. (DN15)	Female NPT Threaded Inlet & Outlet Externally threaded for Unions	140°F Maximum (60°C Maximum)	1/2 Inch DS06 “dialset” low lead pressure regulating valve (PRV) - single union sweat
DS06-100-SUT-LF/U	1/2 in. (DN15)	Female NPT Threaded Inlet & Outlet Externally threaded for Unions	140°F Maximum (60°C Maximum)	1/2 Inch DS06 “dialset” low lead pressure regulating valve (PRV) - single union NPT
DS06-101-DUS-LF/U	3/4 in. (DN20)	Female NPT Threaded Inlet & Outlet Externally threaded for Unions	140°F Maximum (60°C Maximum)	3/4 Inch DS06 “dialset” low lead pressure regulating valve (PRV) - double union sweat
DS06-101-DUT-LF/U	3/4 in. (DN20)	Female NPT Threaded Inlet & Outlet Externally threaded for Unions	140°F Maximum (60°C Maximum)	3/4 Inch DS06 “dialset” low lead pressure regulating valve (PRV) - double union NPT
DS06-101-LF/U	3/4 in. (DN20)	Female NPT Threaded Inlet & Outlet Externally threaded for Unions	140°F Maximum (60°C Maximum)	3/4 Inch DS06 “dialset” low lead pressure regulating valve (PRV) - union body only
DS06-101-SUS-LF/U	3/4 in. (DN20)	Female NPT Threaded Inlet & Outlet Externally threaded for Unions	140°F Maximum (60°C Maximum)	3/4 Inch DS06 “dialset” low lead pressure regulating valve (PRV) - single union sweat
DS06-101-SUT-LF/U	3/4 in. (DN20)	Female NPT Threaded Inlet & Outlet Externally threaded for Unions	140°F Maximum (60°C Maximum)	3/4 Inch DS06 “dialset” low lead pressure regulating valve (PRV) - single union NPT
DS06-102-DUS-LF/U	1 in. (DN25)	Female NPT Threaded Inlet & Outlet Externally threaded for Unions	140°F Maximum (60°C Maximum)	1 Inch DS06 “dialset” low lead pressure regulating valve (PRV) - double union sweat
DS06-102-DUT-LF/U	1 in. (DN25)	Female NPT Threaded Inlet & Outlet Externally threaded for Unions	140°F Maximum (60°C Maximum)	1 Inch DS06 “dialset” low lead pressure regulating valve (PRV) - double union NPT
DS06-102-LF/U	1 in. (DN25)	Female NPT Threaded Inlet & Outlet Externally threaded for Unions	140°F Maximum (60°C Maximum)	1 Inch DS06 “dialset” low lead pressure regulating valve (PRV) - union body only
DS06-102-SUS-LF/U	1 in. (DN25)	Female NPT Threaded Inlet & Outlet Externally threaded for Unions	140°F Maximum (60°C Maximum)	1 Inch DS06 “dialset” low lead pressure regulating valve (PRV) - single union sweat
DS06-102-SUT-LF/U	1 in. (DN25)	Female NPT Threaded Inlet & Outlet Externally threaded for Unions	140°F Maximum (60°C Maximum)	1 Inch DS06 “dialset” low lead pressure regulating valve (PRV) - single union NPT
DS06-103-DUS-LF/U	1 1/4 in. (DN32)	Female NPT Threaded Inlet & Outlet Externally threaded for Unions	140°F Maximum (60°C Maximum)	1 1/4 Inch DS06 “dialset” low lead pressure regulating valve (PRV) - double union sweat
DS06-103-DUT-LF/U	1 1/4 in. (DN32)	Female NPT Threaded Inlet & Outlet Externally threaded for Unions	140°F Maximum (60°C Maximum)	1 1/4 Inch DS06 “dialset” low lead pressure regulating valve (PRV) - double union NPT
DS06-103-SUS-LF/U	1 1/4 in. (DN32)	Female NPT Threaded Inlet & Outlet Externally threaded for Unions	140°F Maximum (60°C Maximum)	1 1/4 Inch DS06 “dialset” low lead pressure regulating valve (PRV) - single union sweat
DS06-103-SUT-LF/U	1 1/4 in. (DN32)	Female NPT Threaded Inlet & Outlet Externally threaded for Unions	140°F Maximum (60°C Maximum)	1 1/4 Inch DS06 “dialset” low lead pressure regulating valve (PRV) - single union NPT
DS06-104-DUS-LF/U	1 1/2 in. (DN40)	Female NPT Threaded Inlet & Outlet Externally threaded for Unions	140°F Maximum (60°C Maximum)	1 1/2 Inch DS06 “dialset” low lead pressure regulating valve (PRV) - double union sweat
DS06-104-DUT-LF/U	1 1/2 in. (DN40)	Female NPT Threaded Inlet & Outlet Externally threaded for Unions	140°F Maximum (60°C Maximum)	1 1/2 Inch DS06 “dialset” low lead pressure regulating valve (PRV) - double union NPT

Material Number	Pipe Size in/(DN)	Connection Type	Operating Temperature °F (°C)	Description
DS06-104-LF/U	1-1/2 in. (DN40)	Female NPT Threaded Inlet & Outlet Externally threaded for Unions	140°F Maximum (60°C Maximum)	1-1/2 Inch DS06 “dialset” low lead pressure regulating valve (PRV) - union body only
DS06-104-SUS-LF/U	1 1/2 in. (DN40)	Female NPT Threaded Inlet & Outlet Externally threaded for Unions	140°F Maximum (60°C Maximum)	1 1/2 Inch DS06 “dialset” low lead pressure regulating valve (PRV) - single union sweat
DS06-104-SUT-LF/U	1 1/2 in. (DN40)	Female NPT Threaded Inlet & Outlet Externally threaded for Unions	140°F Maximum (60°C Maximum)	1 1/2 Inch DS06 “dialset” low lead pressure regulating valve (PRV) - single union NPT
DS06-105-DUS-LF/U	2 in. (DN50)	Female NPT Threaded Inlet & Outlet Externally threaded for Unions	140°F Maximum (60°C Maximum)	2 Inch DS06 “dialset” low lead pressure regulating valve (PRV) - double union sweat
DS06-105-DUT-LF/U	2 in. (DN50)	Female NPT Threaded Inlet & Outlet Externally threaded for Unions	140°F Maximum (60°C Maximum)	2 Inch DS06 “dialset” low lead pressure regulating valve (PRV) - double union NPT
DS06-105-SUS-LF/U	2 in. (DN50)	Female NPT Threaded Inlet & Outlet Externally threaded for Unions	140°F Maximum (60°C Maximum)	2 Inch DS06 “dialset” low lead pressure regulating valve (PRV) - single union sweat
DS06-105-SUT-LF/U	2 in. (DN50)	Female NPT Threaded Inlet & Outlet Externally threaded for Unions	140°F Maximum (60°C Maximum)	2 Inch DS06 “dialset” low lead pressure regulating valve (PRV) - single union NPT

DS06LF Pressure Regulating Valves—Repair Parts

Material Number	Description
D06FA-1/2	DS06 Low-Lead Replacement Parts 1/2" & 3/4" Valve Insert without Filter
D06FA-11/2	DS06 Low-Lead Replacement Parts 1 1/2" & 2" Valve Insert without Filter
D06FA-1B	DS06 Low-Lead Replacement Parts 1" & 1 1/4" Valve Insert without Filter
ES06F-1/2A	DS06 Low-Lead Replacement Parts 1/2" & 3/4" Replacement Filter Insert
ES06F-11/2A	DS06 Low-Lead Replacement Parts 1 1/2" & 2" Replacement Filter Insert
ES06F-1B	DS06 Low-Lead Replacement Parts 1" & 1 1/4" Replacement Filter Insert
SB06T-1	DS06 Low-Lead Replacement Parts 1" & 1 1/4"" Black Filter Bowl with O-Ring
SB06T-1/2	DS06 Low-Lead Replacement Parts 1/2" & 3/4" Black Filter Bowl with O-Ring
SB06T-11/2	DS06 Low-Lead Replacement Parts 1 1/2" & 2" Black Filter Bowl with O-Ring

D05/DS05 Pressure Regulating Valves (Obsolete valves)—Accessories

Material Number	Description	Used With
272840/U	Union gaskets for 1/2 in. D05/DS05 (package of 2)	D05A, D05D, D05G, DS05C, DS05D, DS05
272841/U	Union gaskets for 3/4 in. D05/DS05 (package of 2)	
K06U1069/U	Union kit for D05 for 1/2-in. NPT valves. Includes union nut, threaded tailpiece, and gasket	
K06U1077/U	Union kit for D05 for 3/4-in. NPT valves. Includes union nut, threaded tailpiece, and gasket	
K06U1085/U	Union kit for D05 for 1-in. NPT valves. Includes union nut, threaded tailpiece, and gasket	
K06U1093/U	Union kit for D05 for 1/2-in. sweat valves. Includes union nut, sweat tailpiece, and gasket	
K06U1101/U	Union kit for D05 for 3/4-in. sweat valves. Includes union nut, sweat tailpiece, and gasket	
K06U1119/U	Union kit for D05 for 1-in. sweat valves. Includes union nut, sweat tailpiece, and gasket	
K06U1135/U	Union kit for D05 for 1-1/4-in. NPT valves. Includes union nut, threaded tailpiece, and gasket	
K06U1143/U	Union kit for D05 for 1-1/4-in. sweat valves. Includes union nut, sweat tailpiece, and gasket	

D05/DS05 Pressure Regulating Valves (Obsolete valves)—Repair Parts

Material Number	Description	Used With
K05A1017	Repair Kit for old style D05A,G; DS05G 1 in. and 1-1/4 in. valves. Includes cartridge, screen and O-rings	D05A, D05D, D05G, DS05C, DS05D, DS05G
K05A1025	Repair kit for new D05T, DC05C,D,G 1/2 in., 3/4 in., and 1-in. valves. Includes cartridge, screen and O-ring	D05A, D05D, D05G, D05T, DS05C, DS05D, DS05G
K05B1007	Repair Kit for new D05T; DS05C,D,G 1/2-in. and 3/4-in. valves. Includes screen and O-rings	
K05B1015/U	Repair Kit for new D05T and DS05C,D,G 1-in. valves. Includes screen and O-rings	
K06A1003/U	Cartridge kit for D05G and DS05G 1/2 and 3/4 in. valves. Includes cartridge, screen and O-rings	D05A, D05D, D05G, DS05C, DS05D, DS05G
K06A1011/U	Cartridge kit for D05G and DS05G 1 and 1-1/4 in. valves. Includes cartridge, screen and O-rings	
K06A1019/U	Cartridge kit for D05G and DS05G 1/2 and 3/4 in. valves. Includes screen, plug and O-rings	
K06B1002/U	Cartridge kit for D05G and DS05G 1 and 1-1/4 in. valves. Includes screen, plug and O-rings	
K06B1018/U	Cartridge kit for D05G and DS05G 1 and 1-1/4 in. valves. Includes screen, plug and O-rings	
K06C1036/U	Spring kit for D05G and DS05G 1 and 1-1/4 in. valves. 21-85 psi. Includes spring and adjustment knob (grey)	
K06D1001/U	Cartridge kit for D05G and DS05G 1/2 and 3/4 in. valves. Includes cartridge and O-rings	

D06/DS06 Pressure Regulating Valves (Obsolete valves)—Accessories

Material Number	Description	Used With
272858/U	Union Gasket for 1 1/2 in. D06 and DS06 valves	D06F, D06G, DS06D, DS06G
272859/U	2 in. D06/DS06 union gaskets. Price per piece. Comes 10 pieces per bag	
K06U1037/U	Union kit with threaded tailpiece for 1 1/2 in. D06 and DS06G valves	
K06U1045/U	Union Kit with threaded tailpiece for 2in. D06 and DS06 valves	
K06U5034/U	Union Kit for 1 1/2 in. Sweat D06 and DS06.	
K06U5042/U	Union Kit for 2 in. Sweat D06 and DS06.	

D06/DS06 Pressure Regulating Valves (Obsolete valves)—Repair Parts

Material Number	Description	Used With
K06B1030	Cartridge kit for D06G and DS06G 1-1/2-in. and 2-in. valves. Includes strainer, support and 2 O-rings	D06F, D06G, DS06D, DS06G
K06C1060/U	Spring kit for D06G and DS06G 1-1/2 and 2 in. valves. 21-85 psi. Includes spring and adjustment knob (grey)	
K06D1017/U	Cartridge kit for D06G and DS06G 1-1/2 and 2 in. valves. Includes cartridge and O-rings	
K06D1044	Cartridge kit for D06G,T,U and DS06G 1-1/2-in. and 2in. valves. Includes cartridge, screen and O-rings.	

Lyric™ Water Leak and Freeze Detector

The average water leak causes $7000 in damage*. Be notified of a water leak while it's measured in drops. The Lyric™ Water Leak and Freeze Detector detects water with sensors on base of unit or has expanded coverage with included 4 ft. water sensing cable. Entire cable detects water.

- Conveniently place near sinks, washers, water heaters, sump pumps–anywhere leaks could happen. Battery life lasts up to 3 years without incident.
- Notification messages can alert you or your family/ friends, wherever you are, while audible (100 dB alarm) alerts sound when you are at home.
- Use to detect temperatures that can freeze pipes, and humidity that could damage valuables.
- Runs on WiFi - No Extra Hub or hardware purchase required.
- Daisy chain extra cable sensors and cover up to 500 feet of space with one leak detector.
- Reusable even after detecting an incident. After an alarm, simply wipe dry the detector and cable sensors and place them back into service.

* American Insurance Association

Material Number	Description	Power Method
CHW3610W1001/U	Water Leak Detector and Cable Sensor with 3 AA Batteries	Battery Operated
CHWES41013/U	Accessory Cable Sensor for Lyric Water Leak Detector	

F74C Reversing Rinsing Filter

F74C Reverse Rinsing Filters ensure a continuous supply of filtered water. The fine filter prevents the ingress of foreign bodies, such as rust particles and grains of sand. Both horizontal and vertical installations are possible.

- Whole House Protection
- Filtered water supplied even during reverse rinsing. Patented reverse rinsing system.
- Fast and thorough cleaning of the filter with a small amount of water.
- Bayonet connection enables simple retro-fitting of reverse rinsing actuator.
- Large filter surface.
- Shock resistant, clear synthetic material filter bowl enables easy inspection of filter contamination.
- Filter insert fully interchangeable.
- Simple operation.
- Tested for reliability.

Connection Type: Sweat and threaded
Materials: Body: Plastic with Brass Fittings; Sump: Clear Plastic
Screen Size: 100 micron screen

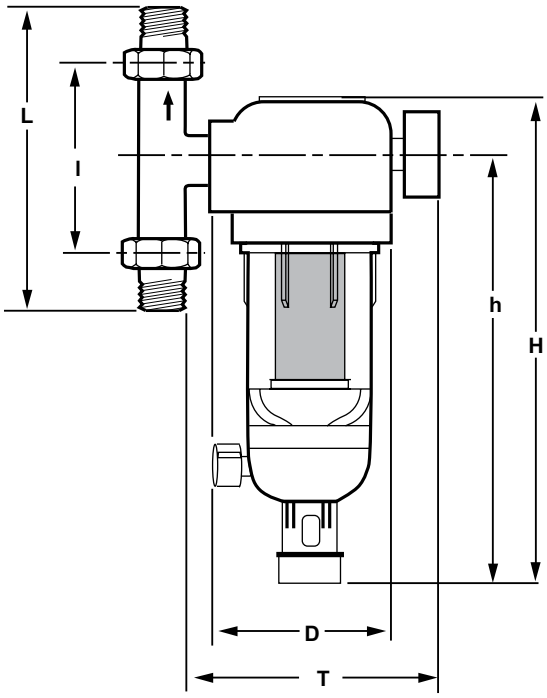

DIMENSION	IN INCHES (MM)
	F74C1015
H	12-13/16 (324)
h	11-3/16 (285)
L	6-3/8 (162)
l	3-9/16 (90)
D	4-1/8 (105)
T	5-5/16 (150)

M34736

Material Number	Pipe Size in/(DN)	Ambient Temperature Range	Maximum Safe Operating Pressure (psi)	Weight	Capacity (Cv)	Description	Includes
F74C1015	3/4 in. (DN20)	86°F Maximum (30°C Maximum)	230 psi	6 lb (2.7 kg)	6.4 Cv	3/4 inch Water filter	gauge and wrench

F76 Water Filters

High flow capacity water filter used to remove sediment and debris from residential or commercial water systems.

- Whole House Protection
- Ideally suited for sediment removal applications that would quickly plug and restrict the flow of normal filters.
- Used as a prefilter, the F76 protects elements of the water system, including specialized treatment devices or other common fixtures and appliances.
- The flow filtering capacity and ease of cleaning make the F76S ideal for the most demanding applications.
- Built-in secondary filter provides an uninterrupted supply of filtered water during backwashing.

Connection Type: NPT External Threaded and Sweat
Approximate Dimensions: 17 11/16 in. high x 6 11/16 in. wide x 3 13/16 in. deep (449 mm high x 170 mm wide x 97 mm deep)
Materials: Body: Brass; Sump: Clear Plastic
Screen Size: 100 micron screen

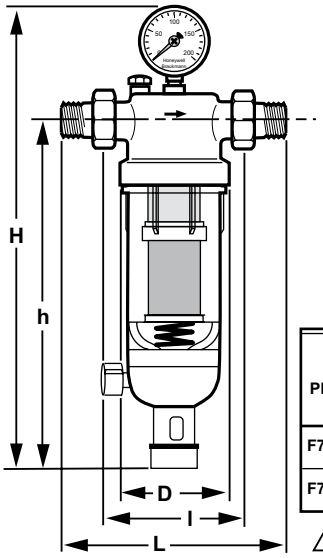

PRODUCT NUMBER AND SIZE	DIMENSIONS IN INCHES (MM)					
	L	I	D	H	h	1 WEIGHT
F76S1007 1/2 IN.	6-11/16 (170)	4-5/16 (110)	3-13/16 (97)	17-11/16 (449)	13-13/16 (350)	6.4 (2.9)
F76S1015 3/4 IN.	7 (178)	4-5/16 (110)	3-13/16 (97)	17-11/16 (449)	13-13/16 (350)	6.4 (2.9)

1 WEIGHT IN POUNDS (KILOGRAMS)

M34737

Material Number	Pipe Size in/(DN)	Ambient Temperature Range	Maximum Safe Operating Pressure (psi)	Weight	Capacity (Cv)	Description	Includes
F76S1007	1/2 in. (DN15)	104°F Maximum (40°C Maximum)	230 psi	6.4 lb (2.9 kg)	5.6 Cv	1/2 inch Water filter	gauge and service wrench
F76S1015	3/4 in. (DN20)	104°F Maximum (40°C Maximum)	230 psi	6.4 lb (2.9 kg)	8.4 Cv	3/4 inch Water filter	gauge and service wrench

MV876 Automatic Backwash Control

The MV876B Automatic-Backwash Control is available as an accessory. This control is fitted to the drain valve and is programmed by the user to automatically perform the backwash function according to the desired interval.

- Bayonet fitting simplifies upgrade to automatic backwash.
- 16 field-selectable backwash intervals (from every four minutes to once every three months) eliminate need for external timer.
- Connections for external control on the MV876 provide for use in automated systems and differential pressure control.
- MV876 can be manually activated to initiate backwash.
- Battery (AA) backup to ensure completion of backwash cycle in spite of power loss.

Backwash Intervals and Selection: 16 intervals from 4 min to 3 months, field adjustable via keypad
Display: Digital
Approximate Dimensions: 6 in. high, 2-3/4 in wide, 6-5/16 in. deep (152 mm high, 70 mm wide, 160 mm deep)
Electrical Ratings: 24 Vac, 10 W

Cycle Time (sec): 20 sec

Material Number	Description
MV876B1018	Automatic backwash control, fits 1/2 in. to 2 in. F76S models and F74C models.

Water Sediment Filter Parts and Accessories

Material Number	Description	Used With
901444	F76S Gasket 1/2-3/4"	F74C or F76S or FF06
901445	F76S Gasket 1"	F74C or F76S or FF06
901446	F76S Gasket 1-1/4"	F76S
901447	F76S Gasket 1-1/2"	F76S
901448	F76S Gasket 2"	F76S
AF11S-11/2A	Screen kit for F76S Water Filter 1-1/2 in. to 2 in.	F76S
AF11S-11/2B	Screen kit for F76S Water Filter 1-1/2 in. to 2 in.	F76S
AF11S-11/2C	Screen kit for F76S Water Filter 1-1/2 in. to 2 in.	F76S
AF11S-11/2D	Screen kit for F76S Water Filter 1-1/2 in. to 2 in.	F76S
AF11S-1A	Screen kit for F76S Water Filter 1/2 in. to 1-1/4 in.	F76S
AF11S-1B	Screen kit for F76S Water Filter 1/2 in. to 1-1/4 in.	F76S
AF11S-1C	Screen kit for F76S Water Filter 1/2 in. to 1-1/4 in.	F76S
AF11S-1D	Screen kit for F76S Water Filter 1/2 in. to 1-1/4 in.	F76S
AS06-1A	Filter mesh and sump O-ring (5 pcs)	

EXCEL 5000 SYSTEM ARCHITECTURE

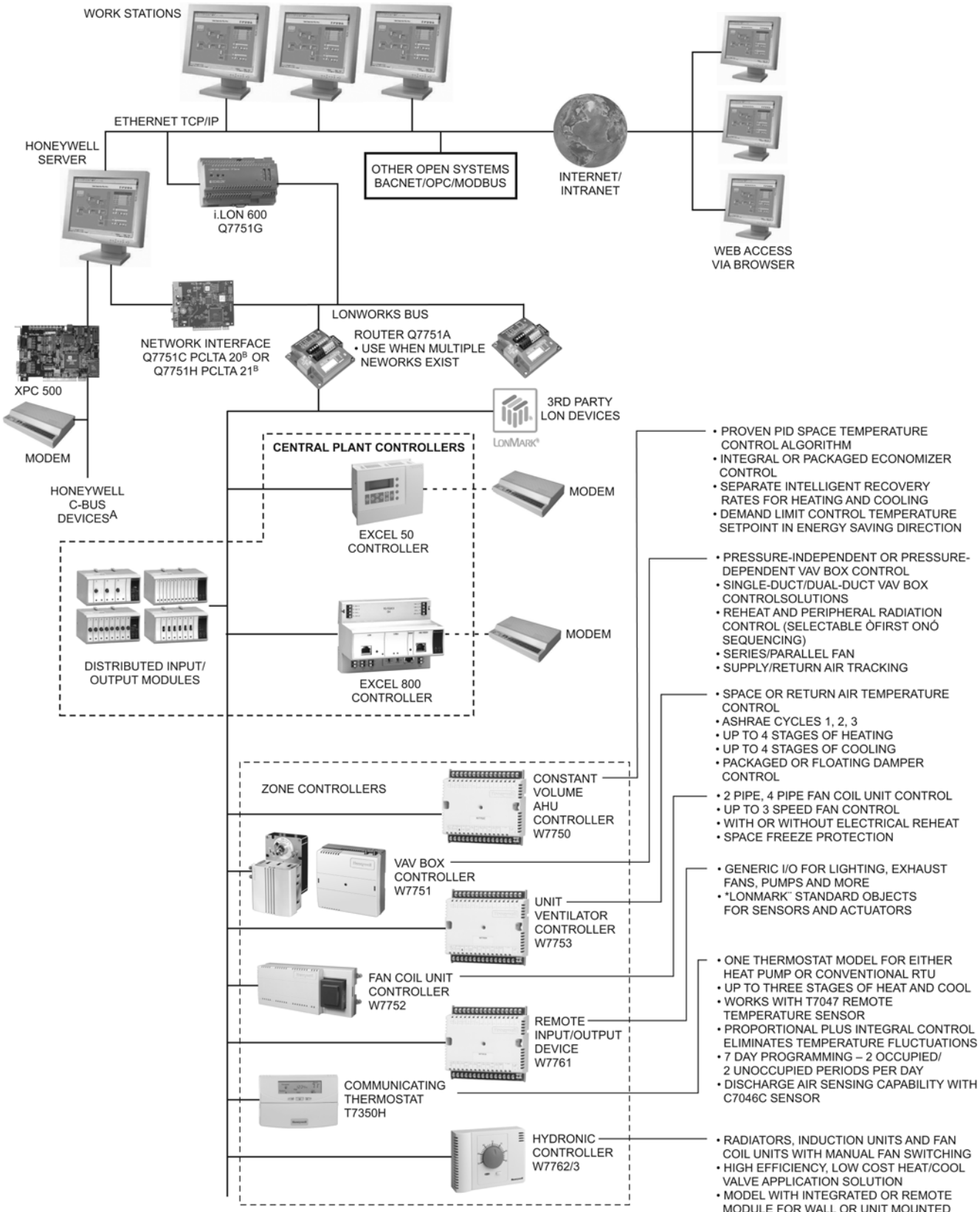

A PLANT CONTROLLERS MAY BE CONFIGURED TO COMMUNICATE ON THE LONWORKS BUS FOR OPEN SYSTEM JOBS OR THE HONEYWELL C-BUS.
B THE SYSTEM ONLY REQUIRES THE i.LON 600 OR THE PCLTA FOR EACH APPLICATION, NOT BOTH.

Controller Tools

The Excel CARE and Live CARE software packages are graphic tools to easily and quickly create and simulate application programs that run controllers in EXCEL 5000® Systems. Users can perform these functions without extensive knowledge of a programming language. Users systematically select control system graphic elements such as lighting and Heating, Ventilating, and Air Conditioning (HVAC) equipment and create control sequences in a Microsoft® Windows® environment. CARE software validates as the designer works, thus keeping the process free of errors. Work is completed quickly and efficiently. As part of the design process, CARE automatically creates comprehensive documentation and materials listings.

NOTE: All CARE products require a signed SOFTWARE LICENSE AGREEMENT prior to purchase. Ordering CARE via this website does not guarantee that you are approved for the purchase. Honeywell reserves the right to refuse shipment, if appropriate.

- Point-and-click programming
- Schematic drawing
- Control strategy
- Switching logic
- Time function
- Mathematical editor
- Standard library
- Documentation
- Control program simulation
- Applicable to EXCEL 5000 System controllers
- Password security

Application: Tool
Application Size: Small to Large
Compatible With: Excel 5000 System Controllers
Building Management Interface: EBI; SymmetrE; XBS
Network Communications: LonWorks Bus; C-Bus

Material Number	Description	Commissioning Software	Output Type	Used With	Includes
CARE-80-LNS	CARE: Graphic Programming Tool	CARE	Graphical Interface	Excel 5000 System Controllers	USB Drive with full installation of CARE 8 with voucher number
PROTPLUG-UP	CARE: Graphic Programming Tool Upgrade	CARE	Graphical Interface	Excel 5000 System Controllers	USB Drive with CARE 8 upgrade

SymmetrE

The Honeywell SymmetrE™ building management system brings your building's occupant needs, operational issues and budget pressures into perfect balance by monitoring and controlling heating, ventilation and air conditioning equipment.

Honeywell's SymmetrE™ PC workstation redefines what to expect from monitoring and controlling your building management system. The scalable software brings your building's occupant needs, operational issues and budget pressures into perfect balance.

- Total solution for Heating, Ventilation & Air conditioning Building Management Systems.
- Integration with a diverse range of devices, Internet and Intranet sources allowing intelligent management of key facility information.
- Uses Industry standard hardware and Windows® 2000 Professional and Windows XP® Professional Operating Systems
- Supports the leading open standards: BACnet®, LONMARK®, ODBC, OPC®, AdvanceDDE and Modbus®.
- Easy-to-use web-style interface reduces operator training costs and puts the user in control of every situation.
- Designed and developed to International Standard ISO® 9001:2000 for quality assurance.

SymmetrE R310; R410 Workstation

Application: Workstation Software
Used With: SymmetrE
Building Management Interface: SymmetrE

Material Number	Description
SYM-DB10-20-EXP/U	Expansion pack - 1000 to 2000 Point DB
SYM-DB10K-15K-EXP	Expansion Pack - 10,000 to 15,000 point DB
SYM-DB15K-20K-EXP	Expansion Pack - 15,000 to 20,000 point DB
SYM-DB20-35-EXP/U	Expansion pack - 2000 to 3500 Point DB
SYM-DB2-5-EXP/U	Expansion Pack - 250 to 500 point DB
SYM-DB35-50-EXP/U	Expansion pack - 3500 to 5000 Point DB
SYM-DB50-75-EXP/U	Expansion pack - 5000 to 7500 Point DB
SYM-DB5-10-EXP/U	Expansion pack - 500 to 1000 Point DB
SYM-DB75-10K-EXP/U	Expansion Pack - 7500 to 10,000 point DB
SYM-IF-ADVDDECL/U	Advance DDE Interface
SYM-IF-BAC/U	BACnet Client (R200 and later)
SYM-IF-OPCCL/U	OPC Client Interface
SYM-IF-XL5DIRDIAL	EXCEL 5000 Dial-up
SYM-NW-OPCSERV/U	OPC Server
SYM-OP-WEBPCTL/U	Web Point Control

SymmetrE Software

Application Size: Small to Large
Used With: Used with SymmetrE
Building Management Interface: SymmetrE

Material Number	Description
SymmetrE Software	
SYM-CD-310/U	CD for SymmetrE R310
SYM-DB250-500-EXP	SymmetrE Software
SYM-IF-XLDIAL/U	XL5000 Dialup Interface
SymmetrE Upgrade Software	
SYMR3UPG-1000/U	SymmetrE Software
SYMR3UPG-10K/U	SymmetrE Software
SYMR3UPG-15K/U	SymmetrE Software
SYMR3UPG-2000/U	SymmetrE Software
SYMR3UPG-20K/U	SymmetrE Software
SYMR3UPG-3500/U	SymmetrE Software
SYMR3UPG-500/U	SymmetrE Software
SYMR3UPG-5000/U	SymmetrE Software
SYMR3UPG-7500/U	SymmetrE Software
SYMSTB/U	SymmetrE Software

SymmetrE Upgrades

Material Number	Description
SYM-DB0500-UPG/U	Software version upgrade with 500 point DB
SYM-DB1000-UPG/U	Software version upgrade with 1000 point DB
SYM-DB10K-UPG/U	Software version upgrade with 10,000 point DB
SYM-DB15K-UPG/U	Software version upgrade with 15,000 point DB
SYM-DB2000-UPG/U	Software version upgrade with 2000 point DB
SYM-DB20KUPG/U	Software version upgrade with 20,000 point DB
SYM-DB20K-UPG/U	Software version upgrade with 20,000 point DB
SYM-DB3500-UPG/U	Software version upgrade with 3500 point DB
SYM-DB7500-UPG/U	Software version upgrade with 7500 point DB

SymmetrE R410 - Software/ Media

Application: Workstation Software
Building Management Interface: SymmetrE

Material Number	Description
SYM-BASE01/U	SymmetrE R410 Base Package 1
SYM-BASE02/U	SymmetrE R410 Base Package 2
SYM-BASE03/U	SymmetrE R410 Base Package 3
SYM-ZZDVD410/U	SymmetrE R410 Software on DVD

SymmetrE R410 - Upgrades

Application: Workstation Software
Building Management Interface: SymmetrE

Material Number	Description
SYM-UPGDR1/U	SYM Upgrade Unit - Release Minus 1
SYM-UPGDR2/U	SYM Upgrade Unit - Release Minus 2
SYM-UPGDR3/U	SYM Upgrade Unit - Release Minus 3
SYM-UPGDRX/U	SYM Upgrade Unit - Release Minus X

SymmetrE R310; R410 - Options

Application: Workstation Software
Building Management Interface: SymmetrE

Material Number	Description
SYM-DBP00250/U	250 Point Adder to Database Size
SYM-IF-BACNET/U	BACnet Client (R200 and later)
SYM-IF-MODBUS/U	Modbus Interface
SYM-OP-ALMPAG/U	Alarm Pager
SYM-OP-BACSERV/U	BACnet Server (R200 and later)
SYM-OP-DTXL/U	OPC Data Transfer - Local
SYM-OPEASYMB/U	Easy Mobile Services
SYM-OP-LNS/U	LNS Server
SYM-OP-LNSUPG/U	LNS Database Upgrade for systems with existing LNS Database
SYM-STB-UP-STN/U	Upgrade Browser client to full station client, R310 ONLY

Excel 800 Controller

With more power and fewer pieces to buy, the new Excel 800 Controller is the plant controller you can count on for years to come. Along with easy programming and extensive memory, it offers all the flexibility you've come to depend on from the Honeywell Excel 5000 product line. Best of all, you won't have to learn any new programming, because your old Excel 500 application programs work perfectly with the Excel 800 controller.

- Double the memory
- Reduced training needs, use your current Excel 500 application programs
- Hot-swappable replacement of defective I/O modules
- Easy-Access Terminals
- Simplified Installation

Frequency: 50 Hz; 60 Hz
Power Consumption: Max 5 VA (max. 4 W)
Voltage: 24 Vac/Vdc ±20%
Shipping and Storage Temperature Range: -4°F to +158°F (-20°C to +70°C)
Operating Humidity Range (% RH): 5 to 93% RH, non-condensing
Building Management Interface: EBI; SymmetrE; ACSELON
Network Communications: LonWorks Bus; C-Bus
Comissioning Software: CARE 8

Material Number	Application	Description	Output Type	Comments	Approvals, Underwriters Laboratories Inc.
XCL8010A	Built-up AHU; Hydronic; Chiller; Cooling Tower; Discharge Air; Boiler; Freely Programmable	Excel 800 Control System	Staged On/Off; Floating; Pulse Width Modulation; Analog/Modulating	CPU Module	UL 916
XCL8010AU	Built-up AHU; Hydronic; Chiller; Cooling Tower; Discharge Air; Boiler; Freely Programmable	Excel 800 Control System	Staged On/Off; Floating; Pulse Width Modulation; Analog/Modulating	CPU Module	UL916 and UL864

Used With: Excel 800 Controller
Frequency: 50 Hz; 60 Hz
Voltage: 24 Vac/Vdc ±20%
Shipping and Storage Temperature Range: -4°F to +158°F (-20°C to +70°C)
Operating Humidity Range (% RH): 5 to 93% RH, non-condensing
Building Management Interface: EBI; SymmetrE; ACSELON
Network Communications: Panel Bus
Comissioning Software: CARE 8

Material Number	Application	Description	I/O Count	Approvals, Underwriters Laboratories Inc.
XF821A	Input Module	Analog Input Module	8 analog input module (Panel)	UL916
XF821AU	Input Module	Analog Input Module	8 analog input module (Panel)	UL916 and UL864
XF822A	Output Module	Analog Output Module	8 Analog Outputs with override (Panel)	UL916
XF822AU	Output Module	Analog Output Module	8 Analog Outputs with override (Panel)	UL916 and UL864
XF823A	Input Module	Digital Input Module	12 binary input module (Panel)	UL916
XF823AU	Input Module	Digital Input Module	12 binary input module (Panel)	UL916 and UL864
XF824A	Output Module	Digital Output Module	6 relay output module (Panel)	UL916
XF824AU	Output Module	Digital Output Module	6 relay output module (Panel)	UL916 and UL864
XFU830A	Input/Output Module	Mixed I/O Module	8 analog input module (Panel); 8 AI's, 12 DI's, 8 AO's, 6 RO's	UL916
XFU830A/U	Input/Output Module	Mixed I/O Module	8 analog input module (Panel); 8 AI's, 12 DI's, 8 AO's, 6 RO's	UL916

Excel Distributed I/O

Distributed input/output modules allow you to monitor and control remote points with just a two-wire communication bus back to the main controller.

- LonMark Compliant.
- 2-wire LonWorks bus interface between controller and I/O.
- No additional field terminals required.
- Usable with Excel 800 controllers in conjunction with standard internal I/O modules.
- Automatic binding and commissioning to Excel 800 controllers when using CARE.

Application: Distributed I/O
Used With: Excel 800 Controller

Building Management Interface: EBI; SymmetrE; ACSELON
Commissioning Software: CARE 8

Material Number	Description	Network Communications	I/O Count	Comments	Approvals, CE
XFL821A	Distributed I/O - Analog input module	LonWorks Bus	8 analog input module (LON)		UL916
XFL821AU	Distributed I/O - Analog input module	LonWorks Bus	8 analog input module (LON)		UL916 and UL864
XFL822A	Distributed I/O - Analog output module	LonWorks Bus	8 analog output module (LON)		UL916
XFL822AU	Distributed I/O - Analog output module	LonWorks Bus	8 analog output module (LON)		UL916 and UL864
XFL823A	Distributed I/O - Digital input module	LonWorks Bus	12 binary input module (LON)	Includes 12 LEDs	UL916
XFL823AU	Distributed I/O - Digital input module	LonWorks Bus	12 binary input module (LON)	Includes 12 LEDs	UL916 and UL864
XFL824A	Distributed I/O - Digital output module	LonWorks Bus	6 relay output module (LON)		UL916
XFL824AU	Distributed I/O - Digital output module	LonWorks Bus	6 relay output module (LON)		UL916 and UL864
XFLR822A	Analog output manual override module	LonWorks Bus	8 Analog Outputs with override (LON)	The manual override module works even if the CPU is not working.	UL916
XFLR822AU	Analog output manual override module	LonWorks Bus	8 Analog Outputs with override (LON)	The manual override module works even if the CPU is not working.	UL916 and UL864
XFLR824A	Digital output manual override module	LonWorks Bus	6 relays with override (LON)	The manual override module works even if the CPU is not working.	UL916
XFLR824AU	Digital output manual override module	LonWorks Bus	6 relays with override (LON)	The manual override module works even if the CPU is not working.	UL916 and UL864
XFR822A	Analog output manual override module	Panel Bus	8 Analog Outputs with override (Panel)	The manual override module works even if the CPU is not working.	UL916
XFR822AU	Analog output manual override module	Panel Bus	8 Analog Outputs with override (Panel)	The manual override module works even if the CPU is not working.	UL916 and UL864
XFR824A	Digital output manual override module	Panel Bus	6 relays with override (Panel)	The manual override module works even if the CPU is not working.	UL916
XFR824AU	Digital output manual override module	Panel Bus	6 relays with override (Panel)	The manual override module works even if the CPU is not working.	UL916 and UL864
XFR825A	Actuator output module	Panel Bus	Actuator output module (Panel)		UL916
XFR825AU/U	Actuator output module	Panel Bus	Actuator output module (Panel)		UL916 and UL864

Excel 100 Controller

The Excel 100 Controllers are direct-digital control, microprocessor-based, programmable controllers that manage building functions.

- Stand-alone or networked operation for flexible use or expansion.
- CARE generated application programs for comprehensive control strategies.
- Analog or digital inputs and outputs for flexible point use.
- Multiple operator interface options for local or easy on-site changes.
- Point trending for timely information.
- Alarm handling facility to locally display the problem and remote dial out to act on it.
- Battery-backed RAM data to keep controller programming in place during power outage.
- Bus-Wide MMI provides local viewing/modification of point information of all controllers attached to the Communication Bus.

Application: Programmable Controller
Frequency: 50 Hz; 60 Hz
Power Consumption: 25 VA Max.
Voltage: 24 Vac/Vdc
Operating Temperature Range: 32°F to 122°F (0°C to 50°C)
Approximate, Dimensions: 9.25 in. high x 7.56 in. wide x 2.83 in. deep (235 mm high x 192 mm wide x 72 mm deep)

Shipping and Storage Temperature Range: -4°F to +140°F (-20°C to +60°C)
Approvals, Underwriters Laboratories Inc.: Form UL916
Approvals, FCC: Meets FCC Part 15, Subpart J for Class A equipment
Approvals, CE: Approved
Operating Humidity Range (% RH): 5 to 90% RH, non-condensing
Building Management Interface: EBI; SymmetrE; ACSELON
Commissioning Software: CARE

Material Number	Description	Network Communications	I/O Count	Output Type
XL100CU	Freely Programmable DDC controller	C-Bus	12 Digital Inputs; 12 Universal Inputs; 12 Universal Outputs	0-10 Vdc, 20mA

Excel 50 Controllers

A compact, programmable controller that manages small building control applications. Available with or without operator interface. Provides perfect solution for managing small building control applications and HVAC equipment control applications.

- Direct communication to C-bus & LonWorks bus and/or modems.
- DIN rail or panel door mounting.
- Available with or without operator interface.
- Stand-alone or networked operation.
- CARE-generated application programs; ability to reuse available CARE applications.
- Flash-EPROM for efficient downloads.
- Wiring simplicity: accessible and removable screw terminal blocks.
- Capacitor-backed RAM; no battery required.

Application: Built-up AHU, Chiller, Cooling Tower, Boiler, Freely Programmable
Frequency: 50 Hz; 60 Hz
Power Consumption: 72 VA, if fully equipped
Voltage: 24 Vac ± 20%
Operating Temperature Range: 32°F to 122°F (0°C to 50°C)
Approximate, Dimensions: 5.90 in. high x 7.79 in. wide x 3.19 in. deep (150 mm high x 198 mm wide x 81 mm deep)

Shipping and Storage Temperature Range: -4°F to +158°F (-20°C to +70°C)
Approvals, Underwriters Laboratories Inc.: Form UL916
Approvals, FCC: Meets FCC Part 15, Subpart J for Class A equipment
Operating Humidity Range (% RH): 5 to 93% RH, non-condensing
Building Management Interface: EBI; SymmetrE; ACSELON
Commissioning Software: CARE

Material Number	Description	Network Communications	I/O Count	Output Type	Comments	Includes	Approvals, CE
XL50A-UMMIPCCBLON	Freely Programmable DDC controller, with operator interface	LonWorks Bus; C-Bus	4 Digital Inputs, 8 Universal Inputs, 4 Universal Outputs, 6 Digital Outputs	Floating; Pulse Width Modulation; Analog/ Modulating; Staged On/Off	Includes Operator Interface	C-Bus / LonWorks Bus communication card	Approved
XL50A-UPCCBLON	Freely Programmable DDC controller	LonWorks Bus; C-Bus	4 Digital Inputs, 8 Universal Inputs, 4 Universal Outputs, 6 Digital Outputs	Floating; Pulse Width Modulation; Analog/ Modulating; Staged On/Off	Does not have Operator Interface	C-Bus / LonWorks Bus communication card	UL916

Excel Smart I/O

Excel Smart I/O modules feature software-configurable inputs and outputs and are suitable for installation throughout your buildings. They convert input signals to network variables and network variables into output signals for operating actuators.

- Flexible, software-configurable inputs/outputs.
- Flash memory for downloading applications.
- 2-wire FTT-10A LonWorks bus interface.
- Easily-accessible service button and a service LED.
- DIN rail mounting and wall-mounting supported.

Application: Configurable I/O
Frequency: 50 Hz; 60 Hz
Voltage: 24 Vac
Operating Temperature Range: 32°F to 122°F (0°C to 50°C)
Approximate, Dimensions: 5 in. wide x 3 in. length x 4.33 in. high (126 mm wide x 76 mm length x 110 mm high)
Shipping and Storage Temperature Range: -22°F to +158°F (-30°C to +70°C)

Approvals, CE: CE and EN 50081-1, LonMark Application Layer Guidelines Version 3.2
Operating Humidity Range (% RH): 5 to 90% RH, non-condensing
Building Management Interface: ACSELON; EBI; SymmetrE
Commissioning Software: CARE

Material Number	Description	Network Communications	I/O Count	Includes
XFC3A06001	Smart I/O module. Lon mark certified. Fixed terminals	LonWorks Bus	4 Digital Inputs; 2 Analog Outputs; 4 Universal Inputs	
XFC3D06001	Smart I/O module with Removable terminals, Lon mark Certified	LonWorks Bus	4 Digital Inputs; 2 Analog Outputs; 4 Universal Inputs	Six 3-position manual overrides and 10 colored status LEDs

Compact I/O

The Honeywell Compact I/O are LON modules with a certain number of digital inputs, analog inputs, digital outputs, analog outputs, and hubs used to record or control network variable points (SNVT's) on a LonWorks bus.

- Configured via LNS Plug-in.
- Easy Installation saves time and money.
- Easy to expand.
- Compact Design.

Application: Input / Output Module
Compatible With: Compact I/O Family
Voltage: 20 - 28 V AC/DC
Operating Temperature Range: 23°F to 131°F (-5°C to 55°C)
Shipping and Storage Temperature Range: -4°F to +158°F (-20°C to 170°C)
Approvals, Underwriters Laboratories Inc.: UL 916
Approvals, CE: Approved
Network Communications: LonWorks Bus
Commissioning Software: LNS Plug-in

Material Number	Description	I/O Count	Power Consumption	Approximate, Dimensions
XIO-10DI/U	Digital Input Module with 10 Inputs	10 Digital Inputs	63 mA (AC) / 21 mA (DC).	1.4 in. wide x 2.8 in. high x 2.6 in. deep (35 mm wide x 71 mm high x 66 mm deep)
XIO-4AO/U	Analog Output Module with 4 Outputs	4 Analog Outputs	150 mA (AC) / 70 mA (DC).	1.4 in. wide x 2.8 in. high x 2.6 in. deep (35 mm wide x 71 mm high x 66 mm deep)
XIO-4DI/U	Digital Input Module with 4 Inputs	4 Digital Inputs	63 mA (AC) / 21 mA (DC).	1.4 in. wide x 2.7 in. high x 2.6 in. deep (35 mm wide x 69 mm high x 66 mm deep)
XIO-4DO/U	Digital Output Module with 4 Outputs	4 Digital Outputs	205 mA (AC) / 67 mA (DC).	1.4 in. wide x 2.8 in. high x 2.9 in. deep (35 mm wide x 71 mm high x 74 mm deep)
XIO-8AI/U	Analog Input Module with 8 Inputs	8 Analog Inputs	57 mA (AC) / 30 mA (DC).	2.0 in. wide x 2.7 in. high x 2.6 in. deep (50 mm wide x 69 mm high x 66 mm deep)

Excel Operator Terminals

The Excel 5000 Operator Interfaces provide local access to Excel 5000 Controllers. XI581 functions as a controller mounted interface. XI582 functions as a desktop or panel/wall mounted interface. XI882 functions as a panel/wall mounted interface.

- Each terminal provides a simple, menu-driven display with extensive functions to view and modify data, such as setpoint values, actual temperature values, control status, and switching status.
- Menu-driven operation for user ease.
- Simple key functions to reduce customer training.
- Password protected operation, for multiple level users.
- Alarm handling capability to display critical alarms for on-site action.
- Backlit LCD display.
- 6 line by 32 character display (the XI882 is a 5.7 inch -320x240 pixel- color touchscreen).

Application: Interface; Display
Comments: Desktop or Panel/Wall Mounted
Used With: Excel 100 Controller; Excel 50 Controllers; Excel 800 Controller; Excel 500 Controller

Compatible With: Excel 50, 100, 500, and 800 controllers
Operating Temperature Range: 32°F to 122°F (0°C to 50°C)

Material Number	Description	Voltage	Approximate, Dimensions	Shipping and Storage Temperature Range	Operating Humidity Range (% RH)
XI582B-EU	Excel Operator Terminals (Desktop/Wall Mounted)	5 Vdc ± 10% (supplied by controller)	5.67 in. high x 7.68 in. wide x 1.24 in. deep (144 mm high x 192 mm wide x 31 mm deep)	-40°F to +158°F (-40°C to +70°C)	5 to 95% RH, non-condensing
XI882A	Excel Operator Terminals (Desktop/Wall Mounted)	24 Vac/Vdc	4 31/32 in. high x 6 39/64 in. wide x 1 49/64 in. deep (126 mm high x 168 mm wide x 45 mm deep)	-13°F to +158°F (-25°C to +70°C)	10 to 95% RH, non-condensing

Excel Web II Control System

Excel Web II is Honeywell's Ethernet-based, freely programmable Building Automation controller offering a combination of BACnet IP, BACnet MS/TP, and LONWORKS® communication. It demonstrates Honeywell's full commitment to reducing total installed cost and total building lifecycle cost for building investors and building operators.

- Reduced the total installed cost
- Universal operation
- Reduced cost for service, operation and maintenance
- Vendor independence
- 100 datapoints can be trended
- Fast application control
- Reliable control performance
- Embedded e-mail/SMS alarming
- Uses Honeywell CARE tool
- Flexible mounting options

Application: Communications adapter
Used With: Excel Web II
Voltage: 19 to 29 Vac or 20 to 30 Vdc; 9 VA

Material Number	Description
IF-LON	External USB-LON interface adapter

LonWorks Bus Accessories

Material Number	Description	Used With	
Q7740A1008/U	Two way repeater with connections for two network segments	LonMark Controllers	
Q7740B1006/U	Four way repeater with connections for four network segments	LonMark Controllers	
Q7750A2003	Excel 10 Zone Manager	LonMark Controllers	
Q7751A2010/U	Excel 10 router used for connection with four network segments, FT-10/FT-10	LonMark Controllers	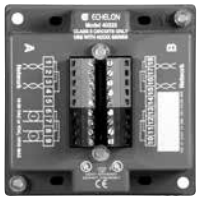
Q7751F1011/U	I.LON 100 - TP/FT - 10 NO MODEM	LonMark Controllers	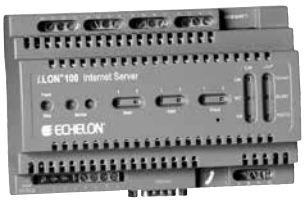
Q7751F1029/U	I.LON 100 - TP/FT - 10 NO MODEM	LonMark Controllers	
Q7751G2009/U	I.LON 600 FT - 10	LonMark Controllers	
Q7751H2007/U	PCLTA-21/TP-1250		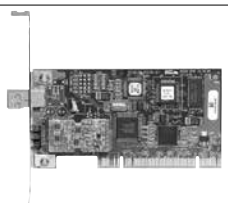
Q7751J2002/U	MPR-50 Multi-Port Router		
Q7752B2009/U	Serial LonTalk Adapter, FTT-10A	LonMark Controllers	

Material Number	Description	Used With	
Q7752C2007/U	U10 - USB Network Interface with Cable		

Excel Controller Accessories

Material Number	Description	Used With	
14500087-004/U	Dodd relay with 12 Vdc coil, switches 120 Vac or 28 Vdc @ 3 amps, used with 14507222 Relay for XL100 Controller	14507222	
14506747-001/U	SUB PANEL, 1/2 Ring, ALUMINUM, UNDRILLED	Panels	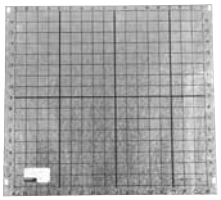
14506747-002/U	SUB PANEL, Full Ring, ALUMINUM, UNDRILLED	Panels	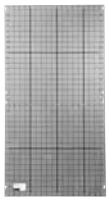
14507063-002/U	Power Supply Cable To Connect Power To Excel Controller	Excel 5000 System Controllers	
14507063-003/U	Power Supply Cable (Tinned Ends) To Connect Power Module To Excel Controller	Excel 5000 System Controllers	
14507222-001/U	Relay Module, Four Relays. Includes Hand-Off-Auto Switches And LEDs	Excel 100B; Excel 500/600 Controller	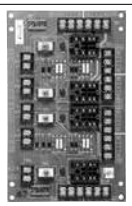
14507222-002/U	Relay Module, Four Relays. Includes LEDs	14507222	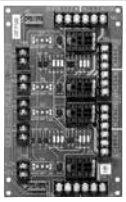

Excel 5000 System

Material Number	Description	Used With	
14507287-001/U	Power Module, 120 Vac Input, 50 Va Controller Transformer With Convertible Outlet And Breaker	Excel 5000 System Controllers	
14507287-002/U	Power Module, 120 Vac Input, 50 Va Controller Transformer Plus 100 Va Accessory Transformer With Convertible Outlet And Breaker,	Excel 5000 System Controllers	
14507287-003/U	Power Module, 120 Vac Input, 50 Va Controller Transformer Plus 100 Va Accessory Transformer And 24 Vdc Accessory Transformer With Convertible Output And Breaker	Excel 5000 System Controllers	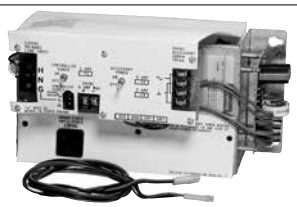
14507287-004/U	Power Module, 220/240 Vac Input, 50 Va Controller Transformer, With Convertible Outlet And Breaker	Excel 5000 System Controllers	
14507287-006/U	Power Module, 220/240 Vac Input, 50 Va Controller Transformer Plus 100 Va Accessory Transformer And 24 Vdc Accessory Transformer With Convertible Outlet And Breaker	Excel 5000 System Controllers	
14507287-007/U	50 VA Excel 5000 access power module for Excel 5000 applications	Excel 5000 System Controllers	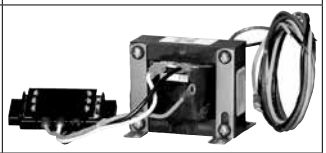
14507324-001/U	High speed, C-bus network repeater, panel mount (without cover) to extend bus length.	Excel 5000 System Controllers	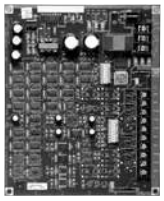
14507324-002/U	High speed, C-bus network repeater, field mount (with cover) to extend bus length.	Excel 5000 System Controllers	
14507547-001/U	C-bus to DB-25 connector cable, to connect internal RS-485 adapter board to C-bus	Excel 5000 System Controllers	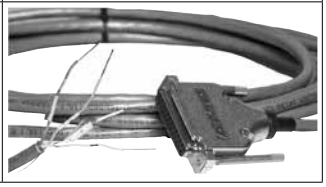

Material Number	Description	Used With	
14507549-001/U	ADAPTER MODULE, RS232 TO RS485	C-Bus	
14507551-001/U	Cable assembly, com port to adapter module, 30 in.	14507549	
14507551-002/U	Cable assembly, com port to adapter module, 10 ft	14507549	
14507552-001/U	Cable assembly, power to adapter module, used with C-Bus and XBS, 11 inches long	14507549	
14507552-002/U	Cable assembly, power to adapter module, used with C-Bus and XBS, 15 inches long	14507549	
14507741-003/U	C-Bus Building Network Adapter for 10BaseT Ethernet	C-Bus	
206168B/B	Controller Assembly for W7751F or D, (Bulk pack only, must be purchased in packs of 10)	Excel 10 Controllers	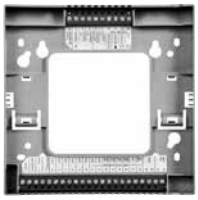
206168BB/U	Electronics for Excel 10 - W7751D and F Controller (Subbases not included) order in increments of 10	W7751D, F	
EXCELON	LonWork Network Management Tool	Excel 5000 System Controllers	
MCE3	Relay Module, Two Spat Outputs, One Spat Output		
S7760A2031/U	Excel 15 Command Display	Excel 10 Controllers; Excel 15 Controllers; Command Display	
XAL10/U	Labels (Package Of 10)	Excel 800 Controller	
XI882-ACC	Excel Touch Accessory kit including replacement Power Wire Terminal, Touch Pen & Holder, Mounting Clips, and Ethernet Cable	XI882	
XL-ONLINE	Excel Online, Commissioning tool for EXCEL 5000 Controllers	Excel 5000 System Controllers	
XL-ONLINE-CD/U	Excel Online, Commissioning tool for EXCEL 5000 Controllers	Excel 5000 System Controllers	

Excel 5000 System

Material Number	Description	Used With	
XM500-US/U	Remote communication module, TCP/IP WAN Modem. Emulates a Hayes compatible phone modem to convert serial data to Ethernet - TCP/IP packets.	Excel 5000 System Controllers	
XS812	Test Connector	Excel 800 Distributed I/O	
XS814	Auxiliary terminal block (10)	Excel 800 Distributed I/O	
XS815	Cross Connector 6 Relays (20)	Excel 800 Distributed I/O	
XS816	Bus Bridge (10)	Excel 800 Distributed I/O	
XS830	10 Auxiliary Terminal Blocks for Distribution of Signals and Power	Excel 800 Distributed I/O	
XS831	10 Auxiliary Terminal Blocks for Current Inputs	Excel 800 Distributed I/O	
XSU821-22	Terminal socket analog modules	Excel 800 Distributed I/O	
XSU823	Terminal socket binary input	Excel 800 Distributed I/O	
XSU824-25	Terminal socket relay output	Excel 800 Distributed I/O	
XW565	Cable to XI582 Connects operator interface to controller, 15 ft (5m)	Excel 500/600 Controller	
XW882	Cable from XI582 to XL800-RS232 (RJ45)	Excel 800 Distributed I/O	
XW884	Adapter cable, XI582 (RJ45) to old XL500	Excel 800 Distributed I/O	
XW885	Cable from PC to XL800-RS232 (RJ45)	Excel 800 Distributed I/O	

WEBs–AX™ System Integration

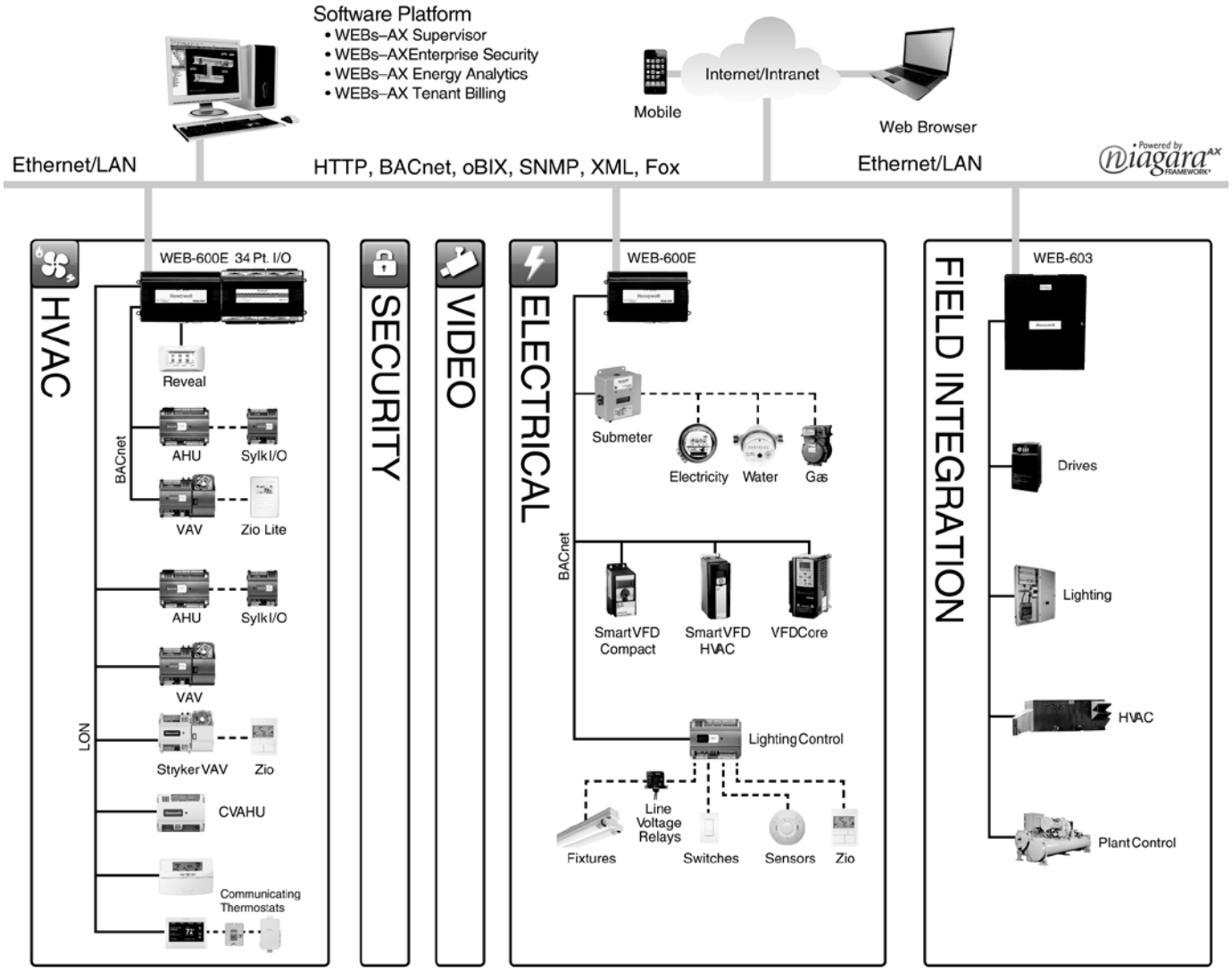

HVAC OPTIONS:

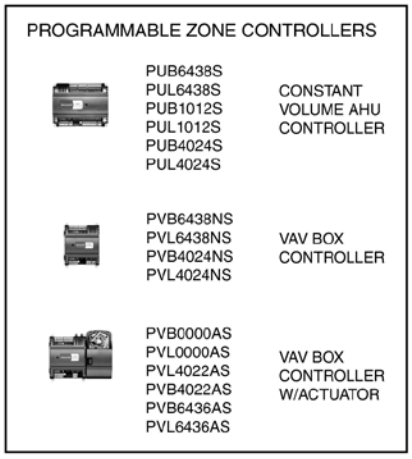

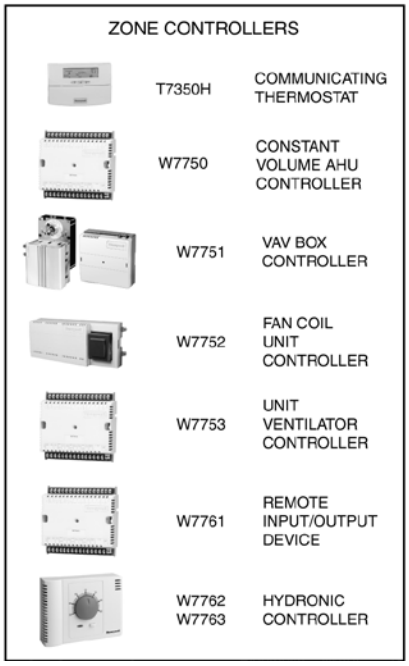

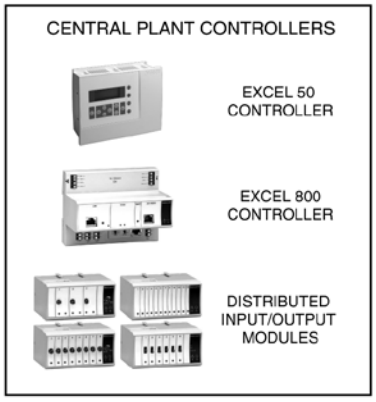

M34718B

WEBs–AX™ System Options

HVAC

Product	Part Number	Operating System [a]	Device Limit	Open License Available	Description
Small Building Supervisor	WEB-S-AX-3-O/U	Windows 32/64 Bit	3	Yes	WEBs-AX Supervisor software 32bit or 64bit Windows Open License. Includes Niagara Historical Database, Workplace AX, and OBIX client-server driver to connect to Niagara based devices. Max of 3 Connected WEBs Controllers
Medium Building Supervisor	WEB-S-AX-100-O/U	Windows 32/64 Bit	100	Yes	WEBs-AX Open License Supervisor software for 32bit or 64bit Windows. Includes Niagara Historical Database, Workplace AX, OBIX client-server driver for connecting to Niagara based controllers only. 100 Max device Limit.
Large Building Supervisor	WEB-S-AX-UNL-O/U	Windows 32/64 Bit	No Limit	Yes	WEBs-AX Open License Supervisor software for 32bit or 64bit Windows. Includes Niagara Historical Database, Workplace AX, OBIX client-server driver for connecting to Niagara based controllers only. No device limit
Supervisor Upgrade	WEB-S-AX-100-UP/U	Windows 32/64 Bit	N/A	N/A	Upgrade Small building Windows supervisor from a max of 3 WEBs Controllers to a max of 100 WEBs Controllers.
	WEB-S-AX-UNL-UP/U	Windows 32/64 Bit	N/A	N/A	Upgrade Medium Building Windows Supervisor from a max of 100 WEBs-AX Controllers to an unlimited number of WEBs Controllers.
Small Building Supervisor	W-S-AX-LNX3-O/U	Linux	3	Yes	WEBs-AX Open License Supervisor software for 32bit or 64bit Linux. Includes Niagara Historical Database, Workplace AX, OBIX client-server driver for connecting to Niagara based controllers only. 3 Device Max
Medium Building Supervisor	W-S-AX-LNX100-O/U	Linux	100	Yes	WEBs-AX Open License Supervisor software for 32bit or 64bit Linux. Includes Niagara Historical Database, Workplace AX, OBIX client-server driver for connecting to Niagara based controllers only. 100 Device Limit
Large Building Supervisor	W-S-AX-LNXUNL-O/U	Linux	No Limit	Yes	WEBs-AX Open License Supervisor software for 32bit or 64bit Windows. Includes Niagara Historical Database, Workplace AX, OBIX client-server driver for connecting to Niagara based controllers only. No device limit
Supervisor Upgrade	W-S-AX-LNX100-UP/U	Linux	N/A	N/A	WEBs-AX Supervisor software for 32-bit or 64-bit Linux. Includes Niagara Historical Database, Workplace AX, OBIX client-server driver for connecting to Niagara based controllers only. No device limit.
	WEB-S-AX-LNXUNL-UP/U	Linux	N/A	N/A	Upgrade Small Building Linux Supervisor from a max of 3 WEBs Controllers to a max of 100 WEBs Controllers.

[a] Windows 32-Bit operating system: Windows XP Pro, Windows 7, Windows 2003 or 2008 server VMware Server Version 2
Windows 64-Bit operating system Win64 version of Windows XP Professional or Win64 version of Windows 7 VMware Server Version 2,
Linux operating system Red Hat Enterprise Linux 5

Applications

ENERGY

Product	Part Number	Device Limit	Description
Tenant Billing	WEB-TBS-AX/U	10 Tenants	WEBs Tenant Billing Service (TBS), includes license for 10 tenants. Must be installed on WEBStation-AX
	WEB-TBS-AX-10/U	10 Tenants	Adds 10 tenants to a TBS License
	WEB-TBS-AX-25/U	25 Tenants	Adds 25 tenants to a TBS License
	WEB-TBS-AX-50/U	50 Tenants	Adds 50 tenants to a TBS License
	WEB-TBS-AX-100/U	100 Tenants	Adds 100 tenants to a TBS License
Energy Analytics	WES-STA-AX/U	1 Controller	Allows multiple points within 1 controller to be retrieved and used within energy analytics
	WES-PNT-AX/U	1 Point	Allows 1 point to be retrieved and used within energy analytics

Driver

WEB Station

Driver	Connectivity	Open Protocol
Assure ID*	Ethernet	
BACnet		Yes
DB2		Yes
File (CSV)		Yes
HTTPS (SSL)		Yes
LON		Yes
MODBUS		Yes
MSSQL		Yes
MySQL		Yes
Niagara (Fox)		
OBIX (XML)		Yes
OPC		Yes
OpenADR		Yes
Oracle		Yes
RedLINK		
SNMP		Yes
Video		

*Available as an option for Enterprise Security

WEB Controller

Driver	Connectivity	Open Protocol
AmericanAuto	Serial	
AndoverAC-256	Serial	
Andover (INF)	Serial	
BACnet	Ethernet/Serial	Yes
Carrier (CCN)	Serial	
Flex Serial	Serial	
GPRS	Wireless	Yes
Honeywell (C-bus)	Serial	
HTTPS (SSL)	Ethernet	Yes
LON	Ethernet/FTT-10 Twisted Pair	Yes
McQuay (OPL)	Serial	
MODBUS	Ethernet/Serial	Yes
OPC	Ethernet	Yes
OpenADR	Ethernet	Yes
RedLINK	Wireless	
Security Comm.*	Serial	Yes
SMS	Ethernet	Yes
SNMP	Ethernet	Yes
Video	Ethernet	
Z-Wave	Wireless	Yes

*Available as an option for Security Controllers

NOTE: A list of available drivers is posted on the Honeywell Buildings Forum (http://buildingsforum.honeywell.com)

M34734

Controllers

	Platform	Memory	I/O	Open License	Communication Ports	Description
	WEB-300E	256 MB 128 MB Flash	Din 16/34	O	2 10/100 MB Ethernet ports, NDIO port and 2 communication card option slots, 2 serial (RS232, RS485)	The WEB-300E standard features include Niagara station and Web User Interface Standard drivers include oBIX client/server and Niagara Network (Fox) client/server .
	AX3-PPC	256 MB 128 MB Flash	Din 16/34	O	2 10/100 MB Ethernet ports, NDIO port and 2 communication card option slots, 1 USB, 2 serial (RS232, RS485)	The AX3-PPC special licensed product with limited drivers features include Niagara station and Web User Interface. Standard drivers include oBIX client/server and Niagara Network (Fox) client/server Requires AX release 3.7 or higher.
	WEB-600E	128 MB 128 MB Flash	Din 16/34	O	2 10/100 MB Ethernet ports NDIO Port 2 serial (RS-232, RS-485) 2 Communication card option slots	The WEB-600E standard features include WEBs-AX station and Web User Interface and SRAM Module. Standard drivers include oBIX Client / Server and Niagara Network (Fox) Client / Server. The WEB-600E is designed for Battery less operation and DIN rail mounting. Requires release 3.6.47 or higher
	WEB-603	128 MB 128 MB Flash	6 Universal Inputs, 4 Form C Relay Outputs	O	2 10/100 MB Ethernet ports 2 serial (RS-232, RS-485) 1 LonWorks port – FTT-10A 1 Option slot	The WEB-603 standard features include Web User Interface and Niagara Connectivity, and oBIX Client/Server driver. Includes steel wall mountable enclosure with 120V power supply. Can host either a WEB R2 station 2.301.535 or higher or a WEBs-AX station release 3.6.47 or higher.
	WEB-645	128 MB 128 MB Flash	—	O	2 10/100 MB Ethernet ports, 2 RJ-45 Connectors for RS-232 port 4 Screw Terminal RS-485 ports 1 Communication Card Option Slot	The WEB-645 standard features include Niagara Station, Web User Interface and WEBs Connectivity, and oBIX Client/Server driver. Includes steel wall mountable enclosure with 120V power supply. Can host either a WEB R2 station 2.301.535 or higher or a WEBs-AX station release 3.6.47 or higher.
	WEB-RB-603	128 MB 128 MB Flash	6 Universal Inputs, 4 Form C Relay Outputs	O	2 10/100 MB Ethernet ports 2 serial (RS-232, RS-485) 1 LonWorks port – FTT-10A 1 Option slot	Direct-fit replacement circuit board for a WEB-403 controller, with matching connector sockets for unplug-replug installation with existing controller wiring. The WEB-RB-603 standard features include Web User Interface and Niagara Connectivity, and oBIX Client/Server driver. The unit can host either a WEB R2 station 2.301.535 or higher or a WEBs-AX station release 3.6.47 or higher.
	WEB-RB-645	128 MB 128 MB Flash	—	O	2 10/100 MB Ethernet ports, 2 RJ-45 Connectors for RS-232 port 4 Screw Terminal RS-485 ports 1 Communication Card Option Slot	Direct-fit replacement circuit board for a WEB-545 controller, with matching connector sockets for unplug-replug installation with existing controller wiring. The WEB-645 standard features include Niagara Station, Web User Interface and WEBs Connectivity, and oBIX Client/Server driver. The unit can host either a WEB R2 station 2.301.535 or higher or a WEBs-AX station release 3.6.47 or higher..
	WEB-700	1 GB 1 GB Flash	Ext. 16	O	2 Gigabit Ethernet ports, 2 standard communication card slots, 2 serial (RS232, RS485)	The WEB-700 standard features include Niagara station and Web User Interface. Standard drivers include oBIX client/server and Niagara Network (Fox) client/server. Requires AX Release 3.5 or higher
	SEC-H-602	256 MB RAM 128 MB Flash	6 Supervised Inputs, 4 Form C Relay Outputs, and 3 Digital Inputs	•	Connections for 2 Card Readers, includes 2 10/100 MB Ethernet ports, (1) RS-485 serial port, (1) RS-232 serial port, and 2 communication card option slots	Includes WEBs Security Appliance, Web UI and the following standard drivers: oBIX client/server, Niagara Network (Fox) client/server and BACNet IP Server, and BACNet IP Server. Supports up to 32 card readers, 20,000 personnel records and 50000 transactional history records and security/BAS from single controller
	SEC-H-616	256 MB RAM 128 MB Flash	6 Supervised Inputs, 4 Form C Relay Outputs, and 3 Digital Inputs	•	Connections for 2 Card Readers, 2 10/100 MB Ethernet ports, (1) RS-485 serial port, (1) RS-232 serial port, and 2 communication card option slots	Includes WEBs Security Appliance, Web UI and the following standard drivers: oBIX client/server, Niagara Network (Fox) client/server and BACNet IP Server, and BACNet IP Server. Supports up to 32 card readers, 20,000 personnel records and 50,000 transactional history records and security/BAS from single controller

O = Open licensed controller is optional
• = Controller comes standard with open license

SECURITY

Product	Part Number	Operating System	Device Limit	Open License Available	Description
Security Small Building Supervisor	SEC-H-ENT-6/U	Windows 32/64 Bit	6	No	WEBs-AX Security SBS, includes enterprise security application with 32 reader license, both MySQL and MS SQL Server database drivers and oBIX client/server driver for connecting to Niagara based controllers only. 6 Controller and 64 Reader Limit.
Security Medium Building Supervisor	SEC-H-ENT-100/U	Windows 32/64 Bit	100	No	Security Supervisor with MySQL and MS SQL Includes enterprise security application with 32 reader license, WEBs-AX Security Supervisor, both MySQL and MS SQL Server database drivers and oBIX client/server driver for connecting to Niagara based controllers only. Max of 100 Security Controllers.
Security Large Building Supervisor	SEC-H-ENT-250/U	Windows 32/64 Bit	250	No	Security Large System Supervisor with MySQL and MS SQL. Includes enterprise security application with 32 reader license, WEBs-AX Security, and both MySQL and MS SQL Server database drivers. 250 Controller Limit. Includes OBIX client/server driver for connecting to Niagara based controllers only.
Supervisor Upgrade	SEC-H-U-100/U	Windows 32/64 Bit	N/A	N/A	Security ENT upgrade. Upgrade an existing SEC-H-ENT-6 SBS Security Supervisor to a SEC-H-ENT-100 Security Supervisor. Supervisor requires additional reader licenses to expand system capacity.
	SEC-H-U-250/U	Windows 32/64 Bit	N/A	N/A	Security ENT upgrade. Upgrade an existing SEC-H-ENT-100 Security AX Supervisor to a SEC-H-ENT-250 Large System Security Supervisor. Supervisor requires additional reader licenses to expand system capacity.

M34733

Accessories

Product Options	Part Number	Serial/ Wireless/ Twisted Pair	Description
Reveal – small display (color & grayscale)	LCD-CT043A100/U	Serial	Color LCD Touchscreen
	LCD-GT043A100/U	Serial	Grayscale LCD Touchscreen
I/O modules – din mount (16/34 points), remote (16)	IO-16-H/U	Serial	Includes 8 Universal Inputs, 4 Form A Relay Outputs, and 4 0-10 VDC Analog Outputs. 16 Point I/O Module
	IO-34-H/U	Serial	Includes 16 Universal Inputs, 10 Form A Relay Outputs, and 8 0-10 VDC Analog Outputs. This IO-34 also contains an on-board 24V AC/DC power supply
	IO-16-REM-H/U	Serial	Includes 8 Universal Inputs, 4 Form A Relay Outputs, and 4 0-10 VDC Analog Outputs.
	SEC-H-RIO/U	Serial	Security Remote I/O
	SEC-H-R2R/U	Serial	Security Remote Reader
Option Cards	NPB-2X-RS485/U	Serial	RS 485 Card
	NPB-2X-RedLINK	Serial	Honeywell RedLINK Card
	NPB-GPRS-W-H/U	Wireless	GPRS Modem Kit
	NPB-RS232/U	Serial	RS 232 Card
	NPB-ZWAVE/U	Wireless	Z-wave Card
	TB-VWG-APP-1014/U	Wireless	Wireless Zigbee Card

M34732

WEBs–AX™ System HVAC Controllers Options

Programmable Field Controllers

	Controller Model[d]	Communication Protocol[a]	Equipment Type	UI	DI	AO	DO	Velocity Pressure Sensor (Microbridge)	Series 60 Floating Actuator
	PUB6438S	BACnet MS/TP	Unitary	6	4	3	8	NO	NO
	PUL6438S	LonWorks		6	4	3	8	NO	NO
	PUB6438SR	BACnet MS/TP		6	4	3	8[c]	NO	NO
	PUL6438SR	LonWorks		6	4	3	8[c]	NO	NO
	PVB6438NS	BACnet MS/TP	VAV	6	4	3	8	YES	NO
	PVL6438NS	LonWorks		6	4	3	8	YES	NO
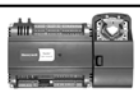	PVB6436AS	BACnet MS/TP	VAV	6	4	3	6	YES	YES
	PVL6436AS	LonWorks		6	4	3	6	YES	YES
	PUL1012S	LonWorks	Unitary	1[b]	0	1	2	NO	NO
	PUB1012S	BACnet MS/TP							
	PUL4024S	LonWorks		4[b]	0	2	4	NO	NO
	PUB4024S	BACnet MS/TP							
	PVL4024NS	LonWorks	VAV	4[b]	0	2	4	YES	NO
	PVB4024NS	BACnet MS/TP							
	PVL0000AS	LonWorks	VAV	0	0	0	0	YES	YES
	PVB0000AS	BACnet MS/TP							
	PVL4022AS	LonWorks		4[b]	0	2	2	YES	YES
	PVB4022AS	BACnet MS/TP							

UI - Universal Input, DI - Digital Input, AO - Analog Output, and DO - Digital Output
[a] BACnet models BTL listed
[b] One Universal Input (UI-1*) is user selectable as a fast digital pulse meter
[c] DO's are 24 VAC relays (1.0 amp running)
[d] Spyder Individually Licensed Controller (ILC) is a fully programmable controller for any Niagara[AX] Framework® platform providing the greatest flexibility. Each model listed as an ILC model.

Additional I/O Module

	Model	Communication Protocol	Universal Input	Digital Input	Analog Output	Digital Output
	SIO6042	Sylk	6	0	4	2
	SIO4022	Sylk	4	0	2	2
	SIO12000	Sylk	12	0	0	0

Advanced Configurable Field Controllers

	Model	Communication Protocol	Programmable Type	UI	DI	AO	DO	Velocity Pressure Sensor (Microbridge)	Series 60 Floating Actuator
	CUL6438SR-CV1	LonWorks	CVAHU	6	4	3	8[a]	NO	NO
	CVL4024NS-VAV1	LonWorks	VAV	4	0	2	4	YES	NO
	CVL4022AS-VAV1	LonWorks	VAV	4	0	2	2	YES	YES

[a] DO's are 24 VAC relays (1.0 amp running)

Configurable Field Controllers

	Model	Application	Inputs						Outputs			
			Wall Module	Resistive	Voltage	Dry Contact Digital	Bypass Button	Integrated Actuator	Relay	Triac	Analog	LED
	W7750A	CVAHU	•	1		2	•		6			1
	W7750B	CVAHU	•	4	2	4	•			8		1
	W7750C	CVAHU	•	4	2	4	•			5	3	1
	W7753	Unit Ventilator	•	2	2	4	•			8		
	W7761	Remote Input/Output		2	2	4				8		
	W7751H	VAV	•	1	1		•	•		4		1
	W7751B/D/F	VAV	•	2	1	3	•			8		1
	W7752	FCU	•			1	•		3			1
	W7762/3	Hydronic Controller	•						1	4		
	T7350H	Communicating Thermostat							8			

• = Comes standard

M34731

WEB-600E Controller

The WEB-600E is ideal for smaller facilities, remote sites, and for distributing control and monitoring throughout large facilities. Optional input/output modules can be plugged in for applications where local control is required. The WEB-600E also supports a wide range of field busses for connection to remote I/O and stand-alone controllers. In small facility applications, the WEB-600E is all you need for a complete system.

The WEB-600E serves data and rich graphical displays to a standard web browser via an Ethernet LAN or remotely over the Internet, or dial-up modem. In larger facilities, multibuilding applications and large-scale control system integrations, WEBs-AX Supervisor™ software can be used to aggregate information (real-time data, history, alarms, etc.) from large numbers of WEBs into a single unified application. The WEBs-AX Supervisor can manage global control functions, support data passing over multiple networks, connect to enterprise level software applications, and host multiple, simultaneous client workstations connected over the local network, the Internet, or dial-up modem.

- Embedded PowerPC Platform@ 524 MHz
- Supports open and legacy protocols
- QNX Real-time Operating System
- Web User interface (standard) serves rich graphical browser presentations
- Run stand-alone control, energy management, and integration applications within the WEB-600E series controllers
- Supports two optional communications boards
- Optional 16 and 34 point I/O Modules
- Data Recovery Services prevents data loss during power interruptions
- Optional battery is available for extended runtime

Material Number	Description	Application	Used With
W-600E-AX-DEMO/U	128 MB RAM/128 MB Flash, 2 10/100 Mb Ethernet ports, 1 RS-485 serial port, 1 RS232 serial port, NDIO port, 2 comm card slots, and SRAM module. Includes oBIX Client/Server and Fox Client/Server. Requires AX release 3.6 or higher.		WEBs-AX
WEB-600E/U	The WEB-600E is designed for Battery less operation and DIN rail mounting. Standard features include WEBs-AX station and Web User Interface. Standard drivers include oBIX Client / Server and Niagara Network (Fox) Client / Server.	Controller	WEBs-AX Platform
WEB-600E-O/U	The WEB-600E is designed for Battery less operation and DIN rail mounting. Standard features include WEBs-AX station and Web User Interface. Standard drivers include oBIX Client / Server and Niagara Network (Fox) Client / Server.	Controller	WEBs-AX Platform
WEB-600E-US/U	The WEB-600E is designed for Battery less operation and DIN rail mounting. Standard features include WEBs-AX station and Web User Interface. Standard drivers include oBIX Client/Server and Niagara Network (Fox) Client/Server. Made in USA	Controller	WEBs-AX Platform
WEB-600E-US-O/U	The WEB-600E is designed for Battery less operation and DIN rail mounting. Standard features include WEBs-AX station and Web User Interface. Standard drivers include oBIX Client/Server and Niagara Network (Fox) Client/Server. Made in USA	Controller	WEBs-AX Platform

WEB-201; WEB-600; WEB-600E Accessories

Used With: WEB-201; WEB-600
Compatible With: WEB-201 Platform; WEB-600 Platform
Operating Temperature Range: 32°F to 122°F (0°C to 50°C)
Operating Humidity Range (% RH): 5 to 95% RH, non-condensing
Building Management Interface: WEBs-AX

Material Number	Description	I/O Count	Commissioning Software	Approvals, Underwriters Laboratories Inc.	Approvals, CSA	Approvals, FCC	Approvals, CE
Enclosure							
ENC-H-001/U	WEBs Small Enclosure including 24 Vac Power Supply and 120 Vac Power Input (18 in. high x 12 in. wide x 4 in. deep)						
ENC-H-002/U	WEBs Large Enclosure including 24 Vac Power Supply and 120 Vac Power Input (28 in. high x 12 in. wide x 4 in. deep)						
ENC-H-BPK-1/U	WEBs Small Enclosure Backplate (8 in. x 11 in.)						
ENC-H-BPK-2/U	WEBs Large Enclosure Backplate (11 in. x 11 in.)						
Input / Output Expansion Module							
IO-16-H/U	16 Point Input / Output Expansion Module	8 Universal Inputs, 4 Digital Relay Outputs, 4 Analog Outputs		UL 916, cUL listed	CSA C22.2 No. 205-M1983 Signal Equipment	FCC part 15 Class A	Approved
IO-16-H-US/U	16 Point Input / Output Expansion Module (Manufactured in USA)	8 Universal Inputs, 4 Digital Relay Outputs, 4 Analog Outputs		UL 916, cUL listed	CSA C22.2 No. 205-M1983 Signal Equipment	FCC part 15 Class A	Approved
IO-34-H/U	34 Point Input / Output Expansion Module including Internally dedicated 24 Volt Power Supply	16 Universal Inputs, 10 Digital Relay Outputs, 8 Analog Outputs		UL 916, cUL listed	CSA C22.2 No. 205-M1983 Signal Equipment	FCC part 15 Class A	Approved
IO-34-H-US/U	34 Point Input / Output Expansion Module (Manufactured in USA) including Internally dedicated 24 Volt Power Supply	17 Universal Inputs, 10 Digital Relay Outputs, 8 Analog Outputs		UL 916, cUL listed	CSA C22.2 No. 205-M1983 Signal Equipment	FCC part 15 Class A	Approved
Modem Option Card							
NPB-GPRS-H/U	WEBs Cellular Modem without SIM Card		WEBs AX				
NPB-GPRS-W-H/U	WEBs Cellular Modem with Wyless SIM Card		WEBs AX				
Power Adapter							
NPB-WPM-US/U	Wall Power Adapter - US Plug type			UL 916, cUL listed	CSA C22.2 No. 205-M1983 Signal Equipment	FCC part 15 Class A	Approved
Power Module							
NPB-PWR-H/U	24 Volt DIN mounted power module			UL 916, cUL listed	CSA C22.2 No. 205-M1983 Signal Equipment	FCC part 15 Class A	Approved
Service Fee							
WEBS-REIMAGE/U	Re-imaging service for Out of Warranty WEBs controllers						

WEB-201/WEB-600 Drivers

Honeywell WEB-201 Platform

Applications: Software-Driver
Building Management Interface: WEBs-AX

Material Number	Description	Compatible With	Used With
NPM-128/U	WEB-201 Memory Expansion License from 64 to 128 MB	WEB-201 Platform	WEB-201
NPM-256MB/U	WEB-600 Memory Expansion License from 128 to 256 MB	WEB-600 Platform	WEB-600

WEB-300E Controller

The WEB-300E is a member of Honeywell's suite of Java-based controller/server products, software applications and tools, which are designed to integrate a variety of devices and protocols into unified, distributed systems. Honeywell WEBs-AX products are powered by the revolutionary WEBs-AX Framework, the industry's first software technology designed to integrate diverse systems and devices into a seamless system.

- Embedded Power PC platform @ 400 MHz
- Supports open and legacy protocols
- QNX Real-time Operating System
- Web User interface (standard) serves rich graphical browser presentations
- Run stand-alone control, energy management, and integration applications within the WEB-300E series controllers
- Supports two optional communications boards
- Optional 16 and 34 point I/O Modules
- Data Recovery Services prevents data loss during power interruptions
- Optional battery is available for extended runtime
- Open or closed licensing options

Includes: Two Ethernet ports, one RS-232 port, and one RS-485 port. Web User Interface and Niagara Connectivity included. oBIX Client/Server driver included.
Operating Temperature Range: 32°F to 140°F (0°C to 60°C)
Approvals, Underwriters Laboratories Inc.: UL 916
Approvals, CSA: CSA C22.2

Approvals, FCC: FCC part 15 Class A
Approvals, CE: Approved
Operating Humidity Range (% RH): 5 to 95% RH, non-condensing
Building Management Interface: WEBs-AX

Material Number	Description	Application	Used With
WEB-300E	Includes two Ethernet ports, one RS-232 port, and one RS-485 port. Web User Interface and Niagara Connectivity included. oBIX Client/Server driver included.	Controller is ideal for smaller facilities, remote sites, and for distributing control and monitoring throughout large facilities	WEBs-AX Platform
WEB-300E-AX-DEMO	Web 300E demo kit	Demo Controller Kit	WEBs AX Platform
WEB-300E-O	WEB-300E with Open License, includes two Ethernet ports, one RS-232 port, and one RS-485 port. Web User Interface and Niagara Connectivity included. oBIX Client/Server driver included.	Controller is ideal for smaller facilities, remote sites, and for distributing control and monitoring throughout large facilities	WEBs-AX Platform

WEB-700 Controller

The WEB-700/O is a next generation embedded server product that runs on the standard NiagaraAX platform. This embedded server platform supports multiple applications like building automation and energy management on the same platform. The WEB-700 is designed to provide high performance for control functions in a convenient din-rail mounted package. The WEB-700 can be accessed by remote Web browsers over a local Intranet or via the Internet or an optional GPRS Modem card.

For medium to large facilities, the WEB-700 is an ideal solution – this powerful platform with its embedded user interface and rich graphical displays is all that's needed to handle the control, monitoring, and energy applications of a medium to large sized facility.

For multi-site enterprise applications, or large scale control applications, the WEB-700 is ideal for providing the distributed control and monitoring required for reliable operation of a large scale system. The WEBs-AX Supervisor may be used to aggregate data from multiple sites and controllers, manage global control functions, monitor energy usage, support multiple networks, and host multiple client connections for a single unified system presentation.

- QNX® Operating System with IBM J9 Java Virtual Machine
- Supports standard Niagara objects and feature set components
- Powerful 440Epx PowerPC processor @ 667 MHz.
- Scalable Plug-in DDR-2 memory (field upgradable)
- Gigabit Ethernet & USB ports
- RS-232 and Isolated RS-485 ports
- Communication option slots for optional communication interface cards
- Supports Serial RS-232, RS-485 communication protocols with optional drivers
- Supports LonWorks with optional communication card, BACnet, Modbus, Sedona Framework with optional wireless option card, and Remote I/O modules
- Power - 15 volts DC @ 20 W from optional universal input Din-rail mounted supply
- Rechargeable internal NIMH battery backup, for short term power fail events
- Built-in recharging and monitoring support for an external 12V sealed lead-acid backup battery, for longer power fail durations. Built-in contact inputs are also available for UPS monitoring
- Multiple Mounting Options – DIN rail mounting or panel mounting using tabs on unit base

Includes: WEB User Interface, Niagara Connectivity (Fox), oBix Client/Server driver
Compatible With: WEBs-AX Platform
Operating Temperature Range: 32°F to 122°F (0°C to 50°C)
Approximate, Dimensions: 6 3/8 in. wide x 4 7/64 in. high x 2.5 in. deep; 8 1/2 in. wide x 6 in. high x 2 5/8 in. high (215.9 mm wide x 152.4 mm high x 68.3 mm high; 16.2 cm wide x 10.5 cm high x 6.4 cm deep)
Shipping and Storage Temperature Range: 32°F to 140°F (0°C to 60°C)
Approvals, Underwriters Laboratories Inc.: UL 916, cUL listed
Approvals, CSA: CSA C22.2 No. 205-M1983 Signal Equipment
Approvals, FCC: FCC part 15 Class A
Approvals, CE: Approved
Operating Humidity Range (% RH): 5 to 95% RH, non-condensing
Building Management Interface: WEBs-AX

Replacement Parts:
WEB-700/U – WEB-700 Controller

Accessories:
WEB-700/U – WEB-700 Controller
WEB-700-O/U – WEB-700 Controller

Material Number	Description	Application	Used With
WEB-700/U	WEB-700 Controller	Controller	WEBs-AX Platform
WEB-700-O/U	WEB-700 Controller	Controller	WEBs-AX Platform

AX3-PPC Programmable Plant Controller

Honeywell's AX3-PPC Programmable Plant Controller is part of Honeywell's portfolio of Java-based controller/server products, software applications and tools, designed to integrate a variety of devices and protocols into unified, distributed systems.

- 34 hardware control points (expandable with NDIO and NRIO modules).
- Pre-Licensed for five remote devices – either BACnet, Modbus or Lon.
- Web User interface serves rich presentations and live data to any browser.
- Two Communications board sockets for optional communications card.
- Built-in 24 volt AC/DC input power supply.
- Din Rail mountable for quick installation.
- Supports up to 150 total points and up to 5 remote devices.

Includes: Standard drivers include oBIX Client / Server and Niagara Network (Fox) Client / Server. Also includes Modbus, BACnet and Lon drivers limited to a total of 5 devices or 150 points per controller.
I/O Count: 16 Universal Inputs (Type 3 (10k) Thermistors, 0-1000 ohm, 0-10 volts, 0-20 mA with external resistor); 10 relay outputs (Form A contacts, 24 VAC @.5 amp rated); 8 analog outputs (0-10 volt DC)
Voltage: Requires 24 Vac or 24 Vdc Power Source
Operating Temperature Range: 32°F to 140°F (with battery 32°F to 122°F) (0°C to 60°C (with battery 0°C to 50°C))
Approximate, Dimensions: Including mounting ears 13-3/32 in. wide x 4-13/16 in. high (including connectors) x 2-7-16 in. deep (Including mounting ears 33.26 cm wide x 12.24 cm high (including connectors) x 6.19 cm deep)
Shipping and Storage Temperature Range: 32°F to 140°F (0°C to 60°C)
Approvals, Underwriters Laboratories Inc.: UL 916

Approvals, CSA: cUL listed to Canadian Standards Association (CSA) C22.2 No. 205-M1983 "Signal Equipment"
Approvals, FCC: FCC part 15 Class B
Approvals, CE: Approved
Operating System: WEBs-AX 3.8 or later
Power Input: 24 Volt AC or DC input power supply; Termination is via screw type terminal block
Operating Humidity Range (% RH): 5 to 95% RH, non-condensing
Building Management Interface: WEBs-AX
Network Communications: 2 Ethernet Ports – 10/100 Mbps (RJ-45 Connectors); 1 RS 232 Port (RJ-45 connector); 1 RS 485 non isolated port (Screw Connector on base board); 2 card slots for optional communication cards

Material Number	Description	Application	Used With
AX3-PPC	AX 334 PROGRAMMABLE PLANT CONTROLLER 34 IO	Controller is ideal for controlling and monitoring a building system including HVAC equipment, lighting, and meters.	WEBs-AX Platform
AX3-PPC-O	AX 334 PROGRAMMABLE PLANT CONTROLLER 34 IO WITH OPEN LICENSE	Controller is ideal for controlling and monitoring a building system including HVAC equipment, lighting, and meters.	WEBs-AX Platform

WEB-603; WEB-645 Controller

Honeywell's WEB-603 and WEB-645 are embedded platform controller/servers designed for remote monitoring and control applications. The units combine integrated control, supervision, data logging, alarming, scheduling and network management functions with Internet connectivity and web serving capabilities in a small, compact platform. The controller/servers make it possible to control and manage external devices over the Internet and present real time information to users in web-based graphical views. In addition to supporting WEBs-AX Framework applications, the controller/servers can optionally support Niagara R2 applications. This option provides the ideal platform for projects currently utilizing WEBs-R2 technology where a cost-effective migration to the flagship WEBs-AX Framework is desired. The WEBs-AX platform can be installed and optionally configured to support a facility utilizing a WEBs-R2 Framework application today. At a later date, the facility can migrate to a WEBs-AX Framework application, thus spreading the cost of the migration across multiple phases. These controller/servers are ideal for smaller facilities, remote sites, and for distributing control and monitoring throughout large facilities. It is also ideal for managing and controlling today's energy applications.

- Embedded PowerPC Platform@ 524 MHz
- One LON FTT10A port for LON device integration
- Web UI services to support many simultaneous users using an optional internal modem over the intranet or Internet via a standard web browser

WEB-603 Connections
- Direct, on-board I/O with six universal inputs, and 4 Form C relay outputs
- One RS-485 port for connection to open and proprietary protocol devices
- One RS-232 port for Integration or technical support
- One option slot supporting NPB-XXX option modules

WEB-645 Connections
- Four RS-485 ports for connection to open and proprietary protocol devices
- Two RS-232 ports (electrically isolated) for Integration or technical support
- One WEBs-AX option slot supporting NPB-XXX option modules

Application: Controller
Used With: WEBs-AX Platform
Operating Temperature Range: 32°F to 122°F (0°C to 50°C)
Approximate, Dimensions: 11 in. wide x 14 in. high x 2 1/2 in. deep (27.94 cm wide x 35.56 cm high x 6.35 cm deep)
Shipping and Storage Temperature Range: 32°F to 158°F (0°C to 70°C)
Approvals, Underwriters Laboratories Inc.: UL 916, cUL listed
Approvals, CSA: CSA C22.2 No. 205-M1983 Signal Equipment
Approvals, FCC: FCC part 15 Class B
Approvals, CE: Approved
Operating Humidity Range (% RH): 5 to 95% RH, non-condensing
Building Management Interface: WEBs-AX

Material Number	Description	Includes
WEB-603-AX/U	WEB-603 controller, with on-board I/O points with metal enclosure. Requires WEBs-AX 3.6.47 Release or later when operating an AX workstation.	Base Unit including two Ethernet ports, one RS-232 port, one RS-485 port, one LonWorks® FTT-10A port, six universal inputs, four Form C relay outputs, and closed NiCS. Web User Interface and Niagara Connectivity included. oBIX Client/Server driver included.
WEB-603-AX-O/U	WEB-603 controller Open license, with on-board I/O points with metal enclosure. Requires WEBs-AX 3.6.47 Release or later when operating an AX workstation.	Base Unit including two Ethernet ports, one RS-232 port, one RS-485 port, one LonWorks® FTT-10A port, six universal inputs, four Form C relay outputs, and open NiCS. Web User Interface and Niagara Connectivity included. oBIX Client/Server driver included.
WEB-603I-AX/U	Controller	International version of Base Unit including two Ethernet ports, one RS-232 port, one RS-485 port, one LonWorks® FTT-10A port, six universal inputs, four Form C relay outputs, and closed NiCS. Web User Interface and Niagara Connectivity included. oBIX Client/Server driver included.
WEB-603I-AX-O/U	Controller	International version of Base Unit including two Ethernet ports, one RS-232 port, one RS-485 port, one LonWorks® FTT-10A port, six universal inputs, four Form C relay outputs, and open NiCS. Web User Interface and Niagara Connectivity included. oBIX Client/Server driver included.
WEB-645-AX/U	WEB-645 controller with on-board I/O points with metal enclosure. Requires WEBs-AX 3.6.47 Release or later when operating an AX workstation.	Base Unit including two Ethernet ports, two RS-232 ports, four RS-485 ports, one LonWorks® FTT-10A port, and closed NiCS. Web User Interface and WEBs Connectivity included. oBIX Client/Server driver included.
WEB-645-AX-O/U	WEB-645 controller Open license, with on-board I/O points with metal enclosure. Requires WEBs-AX 3.6.47 Release or later when operating an AX workstation.	Base Unit including two Ethernet ports, two RS-232 ports, four RS-485 ports, one LonWorks® FTT-10A port, and open NiCS. Web User Interface and WEBs Connectivity included. oBIX Client/Server driver included.
WEB-645I-AX/U	Controller	International version of the Base Unit including two Ethernet ports, two RS-232 ports, four RS-485 ports, one LonWorks® FTT-10A port, and closed NiCS. Web User Interface and WEBs Connectivity included. oBIX Client/Server driver included.
WEB-645I-AX-O/U	Controller	International version of the Base Unit including two Ethernet ports, two RS-232 ports, four RS-485 ports, one LonWorks® FTT-10A port, and open NiCS. Web User Interface and WEBs Connectivity included. oBIX Client/Server driver included.

WEB-403 and WEB-545 Replacement Boards

Honeywell's WEB-RB-603 and WEB-RB-645 are embedded replacement controller/server platforms designed for remote monitoring and control applications. These specially designed units provide direct replacement/upgrade capabilities for the older WEB-403 and WEB-545 controllers respectively. The embedded controllers combine integrated control, supervision, data logging, alarming, scheduling and network management functions, integrated I/O with Internet connectivity and web serving capabilities in a small, compact platform. The WEB-RB-603 and WEB-RB-645 make it possible to control and manage external devices over the Internet and present real time information to users in web-based graphical views.

In addition to supporting WEBs-AX powered by NiagaraAX Framework applications, the WEB-RB-603 and WEB-RB-645 can optionally support WEBs-R2 applications. This option provides the ideal platform for projects currently utilizing WEBs-R2 technology where a cost-effective migration to WEBs-AX solution is desired. The WEBs-AX compatible platform can be installed and optionally configured to support a facility utilizing a WEBs-R2 Framework application today. At a later date, the facility can migrate to a NiagaraAX Framework application, thus spreading the cost of the migration across multiple phases.

The WEB-RB-603 and WEB-RB-645 are designed to provide installers an optimized approach to upgrading older Niagara R2 based installations or NiagaraAX installations which currently utilize the WEB-403 or WEB-545 controllers. The WEB-RB-603 or WEB-RB-645 is an exact format replacement circuit board with all connectors and mounting holes in the same locations as the original WEB-403 and WEB-545 products. This design facilitates an easy removal and replacement process requiring minimal time to achieve.

WEB-RB-603 Communications
- Two 10/100 Mb Ethernet port – RJ-45 connection
- One RJ-45 connector for RS-232 port
- One screw terminal RS-485 port (up to 78,600 baud for MSTP)
- One LonWorks port – FTT-10A with Weidmuller connector
- One option slot

WEB-RB-645 Communications
- Two 10/100 Mb Ethernet port – RJ-45 connection
- Two RJ-45 connectors for RS-232 port
- Four screw terminal RS-485 ports (up to 78,600 baud for MSTP)
- One LonWorks port – FTT-10A with Weidmuller connector
- One option slot

Application: Controller
Used With: WEBs-AX Platform
Operating Temperature Range: 32°F to 122°F (0°C to 50°C)
Shipping and Storage Temperature Range: 32°F to 158°F (0°C to 70°C)
Approvals, Underwriters Laboratories Inc.: UL 916, cUL listed
Approvals, CSA: CSA C22.2 No. 205-M1983 Signal Equipment
Approvals, FCC: FCC part 15 Class B
Operating Humidity Range (% RH): 5 to 95% RH, non-condensing
Building Management Interface: WEBs-AX

Material Number	Description	Includes
WEB-R2-RB-6XX-O/U	R2 License for Replacement Board	WEBs-R2 application option which allows the installer to utilize an R2 based station on either the WEB-RB-603 or WEB-RB-645 platforms. Includes WEBs-R2 station license and individual drivers transferred from original license.
WEB-RB-603/U	Direct-fit replacement circuit board for a WEB-403 controller	Base Unit including two Ethernet ports, two RS-232 ports, four RS-485 ports, one LonWorks® FTT-10A port, and closed NiCS. Web User Interface and WEBs Connectivity included. oBIX Client/Server driver included.
WEB-RB-645/U	Direct-fit replacement circuit board for a WEB-545 controller	Base Unit including two Ethernet ports, two RS-232 ports, four RS-485 ports, one LonWorks® FTT-10A port, and open NiCS. Web User Interface and WEBs Connectivity included. oBIX Client/Server driver included.

WEBs-AX Software Controller

PC/ Workstation-based Controller.

Compatible With: W-SJ-1M-AX
Building Management Interface: WEBs-AX

Material Number	Description	Application	Used With
SJ-2M-UPG-AX/U	Upgrade for WEBs-AX SoftJACE. Increases Niagara point count from 10M to 30M.	Software-Driver	WEBs-AX Soft Controller
W-SJ-1M-AX/U	WEBs-AX SoftJACE software for Windows XP	Controller	WEBs-AX Platform

WEBs-AX Platform - Displays

Reveal™ is an easy-to-operate and robust operator unit for the entire range of WEBs-AX and ComfortPoint (CP) supervisory Controllers. Reveal's touch-panel operation screens allow for easy and self-explanatory operation by finger-tip. User-configurable fast-access lists can contain selected data points, time programs, and parameters, thus permitting plant oriented and customer-oriented operation. Reveal uses Honeywell's patent pending EZ-Nav™ technology to provide real-time status information on an easy-to-use, wall-mounted touch-screen LCD. Reveal has a 480 x 272, High Definition, 24-bit Full Color backlit LCD display. It is also available in a 16-level Extended Temperature gray-scale display. Both displays have a viewing area of 8 in² (51.6 cm²). Reveal has customizable user screens, multi-language capability, and permission-based access control. With these features it provides site personnel the ability to quickly and conveniently access setpoint changes, local alarm data, and other system information. This device can be configured through the WEBs or ComfortPoint (CP) workbench/supervisor using a software driver.

- Multi-Language capable
- Password protection
- Upgrade of installed systems
- System-wide information access
- Multiple Displays for a single Controller
- Protocol independent
- Maintenance free
- Network security

Application: Display
Compatible With: WEB-545, WEB-403; WEB-201, WEB-600
Voltage: 24 Vac
Approximate, Dimensions: 6 9/16 in. long x 3 11/16 in. wide x 1 7/16 in. deep (167 mm long x 93 mm wide x 36 mm deep)
Approvals, CSA: Certified

Approvals, FCC: FCC part 15 Class B requirements
Approvals, CE: CE Mark
Operating System: Windows CE
Operating Humidity Range (% RH): 5 to 95% RH, non-condensing
Building Management Interface: WEBs-AX
Commissioning Software: WEBs AX

Material Number	Description	Network Communications	Output Type	Operating Temperature Range	Shipping and Storage Temperature Range	Used With
LCD-CT043A100/U	Reveal Color Touch screen	1 RS 485	Graphical Interface	14°F to 122°F (-10°C to +50°C)	-4°F to +140°F (-20°C to +60°C)	WEBs-AX Controllers
LCD-GT043A100/U	Reveal Grayscale Touch screen	1 RS 485	Graphical Interface	-4°F to 158°F (-20°C to 70°C)	-22°F to 176°F (-30°C to 80°C)	WEBs-AX Controllers

WEBs-AX Platform - Drivers for Controllers

Honeywell AX software drivers and options for P/C Workstations

Application: Software-Driver
Compatible With: WEBs-AX Controllers
Building Management Interface: WEBs-AX

Material Number	Description	Used With
DR-AAMPHP-AX/U	American Automatrix PHP Driver over RS-232 or RS-485	WEBs-AX Controllers
DR-AAMPUP-AX/U	American Automatrix PUP Driver over RS-232 or RS-485	WEBs-AX Controllers
DR-AC256-AX/U	AC256 Driver	WEBs-AX Controllers
DR-AINF-AX/U	Anfover Infinity Driver for WEBs-AX controllers	WEBs-AX Controllers
DR-BAC-CLI-AX/U	BACnet IP Client Driver over Ethernet	WEBs-AX Controllers
DR-BAC-SR-EXP-AX	BACnet server option to add to client	WEBs-AX Controllers
DR-BAC-SRV-AX/U	BACNet Server includes BACNet IP Client	WEBs-AX Controllers
DR-CBUS-AX/U	C-BUS DRIVER LICENSE FOR WEBs AX	WEBs-AX Controllers
DR-EIB-AX	EIB Konnex IP Driver	WEBs-AX Platform
DR-FLX-AX/U	Flex Driver over RS-232 or RS-485	WEBs-AX Controllers
DR-GLOBAL-AX/U	Enables control of IR controlled AV equipment via an RS-323 connection to a Global Cache FC module	WEBs-AX Controllers
DR-HELVAR-AX/U	Helvar Lighting Control Driver	WEBs-AX Controllers
DR-HORTS-AX/U	Driver for European Hortsmann meters	WEBs-AX Controllers
DR-JOSAM-AX/U	Josam Grease Trap Sensor Driver	WEBs-AX Controllers
DR-LANGOVN-AX/U	Lang Oven over RS-232 or RS-485	WEBs-AX Controllers
DR-LONDRIV-AX/U	LON works FTT10 Driver	WEBs-AX Controllers
DR-LON-IP-AX/U	LON over IP Driver	WEBs-AX Controllers
DR-MBUS232-AX/U	M-Bus RS-232 Driver	WEBs-AX Controllers
DR-MCQUAY-AX/U	McQuay Driver for OPM	
DR-MDB-AX/U	Driver for Modbus RTU or ASCII over RS-485 or RS232	WEBs-AX Controllers
DR-MDB-S-AX/U	Data server to Modbus Master devices over RS485	WEBs-AX Controllers
DR-MDB-TCP-AX/U	Driver for Modbus TCP (25 node limit recommended)	WEBs-AX Controllers
DR-MDB-TS-AX/U	Data server to Modbus Master devices over TCP	WEBs-AX Controllers
DR-MSTP-AX/U	MSTP BACnet communications via RS-485 port	WEBs-AX Controllers
DR-NS-SIMADR-1/U	AX SUPERVISOR DRIVER FOR ONE ADDITIONAL OPENADR CLIENT CONNECTIVITY TO DRAS SERVER. DR-NS-SIMADR-AX MUST BE ALREADY PRESENT ON HOST	
DR-NS-SIMADR-AX/U	AX SUPERVISOR DRIVER FOR OPENADR CLIENT CONNECTIVITY TO DRAS SERVER	
DR-REVEAL-ILD	Driver for Reveal LCD Programmable Display	WEBs-AX Controllers
DR-S-EIB-500	KNX and EIB Driver additional 500 points	WEBs-AX Platform
DR-S-EIB-AX	KNX and EIB Driver first 500 points	WEBs-AX Platform
DR-SIMADR-1/U	AX CONTROLLER DRIVER FOR ONE ADDITIONAL OPENADR CLIENT CONNECTIVITY TO DRAS SERVER. DR-SIMADR-AX MUST BE ALREADY PRESENT ON HOST	
DR-SIMADR-AX/U	AX CONTROLLER DRIVER FOR OPENADR CLIENT CONNECTIVITY TO DRAS SERVER	
DR-SMSALRM-AX/U	Enables SMS alarms to be sent to any mobile phone via a GSM/GPRS modem connected to the RS-232	WEBs-AX Controllers
DR-SNMP-AX/U	Driver for importing data from SNMP compliant devices. Also exports WEBs alarms to SNMP devices.	WEBs-AX Controllers
DR-SPYDER-BAC/U	BACnet Spyder Controllers Driver for WEBs AX	WEBs-AX Controllers
DR-SPYDER-LON/U	Lon Spyder Controllers Driver for WEBs AX	WEBs-AX Controllers
DR-VDROOT-AX/U	VeederRoot Driver	WEBs-AX Controllers
H-SP-SSL/U	BACnet IP Client Driver over Ethernet	WEBs-AX Controllers
WEB-AX-EMB/U	Embedded WEBPro-AX tool	WEBs-AX Controllers

WEBs-AX Platform - Software

Application: Software
Building Management Interface: WEBs-AX

Material Number	Description	Used With
W-ALARM-CONSL/U	WEBs-AX Alarm Console software for Windows XP	WEBs-AX Platform
WEB-S-AX-W/U	AX Workbench	WEBs-AX Platform

WEBs-AX Platform - Supervisor Software

Application: Software
Building Management Interface: WEBs-AX

Accessories:
WEB-S-AX/U – WEBStation-AX Workstation software for Windows XP

Material Number	Description	Used With
Honeywell AX Supervisor Software		
WEB-S-AX/U	WEBStation-AX Workstation software for Windows XP	WEBs-AX Platform
WEB-S-AX-100-O/U	WEBs-AX Open License Supervisor software for 32bit or 64bit Windows. Includes Niagara Historical Database, Workplace AX, OBIX client-server driver for connecting to Niagara based controllers only. Request CD at time of purchase. 100 Max device Limit.	
WEB-S-AX-100-UP/U	Upgrade Small building Windows supervisor from a max of 3 WEBs Controllers to a max of 100 WEBs Controllers.	
WEB-S-AX-3-O/U	WEBs-AX Supervisor software 32bit or 64bit Windows Open License. Includes Niagara Historical Database, Workplace AX, and OBIX client-server driver to connect to Niagara based devices. Request CD at time of Purchase. Max of 3 Connected WEBs Controllers	
WEB-S-AX-O/U	WEBStation-AX Workstation software for Windows XP	WEBs-AX Platform
WEB-S-AX-UNL-O/U	WEBs-AX Open License Supervisor software for 32bit or 64bit Windows. Includes Niagara Historical Database, Workplace AX, OBIX client-server driver for Niagara based controller connectivity only. Request CD at time of purchase. No Controller Device Limit	
WEB-S-AX-UNL-UP/U	Upgrade Medium building Windows supervisor from a max of 100 WEBs Controllers to unlimited connectivity (as many WEBs Controllers as the PC can handle)	
W-S-AX-LNX100-O/U	WEBs-AX Open License Supervisor software for 32bit or 64bit Linux. Includes Niagara Historical Database, Workplace AX, OBIX client-server driver for connecting to Niagara based controllers only. Request CD at time of purchase. 100 Device Limit	
W-S-AX-LNX100-UP/U	Upgrade Small Building Linux Supervisor from a max of 3 WEBs Controllers to a max of 100 WEBs Controllers	
W-S-AX-LNX3-O/U	WEBs-AX Open License Supervisor software for 32bit or 64bit Linux. Includes Niagara Historical Database, Workplace AX, OBIX client-server driver for connecting to Niagara based controllers only. Request CD at time of purchase. 3 Device Max	
W-S-AX-LNXUNL-O/U	WEBs-AX Supervisor software for 32-bit or 64-bit Linux. Includes Niagara Historical Database, Workplace AX, OBIX client-server driver for connecting to Niagara based controllers only. Request CD at time of purchase. No device limit.	
W-S-AX-LNXUNL-UP/U	Upgrade Medium building Linux supervisor from a max of 100 WEBs Controllers to unlimited connectivity (as many WEBs Controllers as the PC can handle)	
Honeywell WEBs-AX™ Enterprise Security is a comprehensive access control and security management solution built on a truly open, IP based platform. It uses NiagaraAX Framework, for unparalleled interoperability in traditional security environments.		
SEC-H-ENT-100/U	Includes enterprise security application with 32 reader license, WEBs-AX Security Supervisor, both MySQL and MS SQL Server database drivers and OBIX client/server driver for connecting to Niagara based controllers only. Max of 100 Security Controllers.	
SEC-H-ENT-100-MA/U	Annual software maintenance agreement when purchased with any Enterprise Security Supervisor. Includes new and interim releases for one year from date of purchase.	
SEC-H-ENT-250/U	Includes enterprise security application with 32 reader license, WEBs-AX Security, and both MySQL and MS SQL Server database drivers. 250 Controller Limit. Includes OBIX client/server driver for connecting to Niagara based controllers only.	
SEC-H-ENT-250-MA/U	Annual software maintenance agreement when purchased with any Large Scale Enterprise Security Supervisor. Includes new and interim releases for one year from date of purchase.	
SEC-H-ENT-6/U	WEBs-AX Security SBS, includes enterprise security application with 32 reader license, both MySQL and MS SQL Server database drivers and OBIX client/server driver for connecting to Niagara based controllers only. 6 Controller and 64 Reader Limit.	
SEC-H-ENT-6-MA/U	Annual software maintenance agreement when purchased with any Security Small Building Supervisor. Includes new and interim releases for one year from date of purchase.	
SEC-H-REV-100/U	New release software upgrade for Enterprise Security Supervisor. Price includes all applications and drivers licensed for the Supervisor. Upgrades the Supervisor to the current release.	
SEC-H-REV-250/U	New release software upgrade for Enterprise Security Large System Supervisor. Price includes all applications and drivers licensed for the Supervisor. Upgrades the Supervisor to the current release.	
SEC-H-REV-6/U	New release software upgrade for Enterprise Security Small Building Supervisor. Price includes all applications and drivers licensed for the Supervisor. Upgrades the Supervisor to the current release.	
SEC-H-U-100/U	Security ENT upgrade. Upgrade an existing SEC-H-ENT-6 SBS Security Supervisor to a SEC-H-ENT-100 Security Supervisor. Supervisor requires additional reader licenses to expand system capacity.	
SEC-H-U-250/U	Security ENT upgrade. Upgrade an existing SEC-H-ENT-100 Security AX Supervisor to a SEC-H-ENT-250 Large System Security Supervisor. Supervisor requires additional reader licenses to expand system capacity.	

WEBs-AX Platform - Drivers for Supervisors

Application: Software-Driver
Building Management Interface: WEBs-AX

Material Number	Description	Used With
Honeywell AX software drivers and options for P/C Workstations		
DR-NS-BAC-500/U	Additional 500 point block for WEBStation-AX BACnet driver	WEBs-AX Supervisors
DR-NS-BAC-AX/U	AX Supervisor BACnet Driver	WEBs-AX Supervisors
DR-NS-MDB-500/U	Additional 500 point block for WEBStation-AX MDB TCP Driver	WEBs-AX Supervisors
DR-NS-MDB-AX/U	AX Supervisor Modbus TCP Driver	WEBs-AX Supervisors
DR-NS-OBIX500/U	Additional 500 point block for AX Supervisor oBix Driver	WEBs-AX Supervisors
DR-NS-OBIX-AX/U	AX Supervisor oBix Driver	WEBs-AX Supervisors
DR-NS-OPC-500/U	Additional 500 point block for WEBStation-AX OPC Client Driver	WEBs-AX Supervisors
DR-NS-OPC-AX/U	AX Supervisor OPC Driver	WEBs-AX Supervisors
DR-NS-SNMP-500/U	Additional 500 point block for WEBStation-AX SNMP Driver	WEBs-AX Supervisors
DR-NS-SNMP-AX/U	AX Supervisor SNMP Driver	WEBs-AX Supervisors
S-AX-BCSRV-AX/U	AX Supervisor BACNet IP Server Driver	WEBs-AX Supervisors
S-DB-CSV/U	File Network Device Driver for importing CSV files	WEBs-AX Supervisors
S-DB-DB2/U	WEBStation-AX driver for DB2 database	WEBs-AX Supervisors
S-DB-MYSQL/U	WEBStation-AX driver for Microsoft MySQL database	WEBs-AX Supervisors
S-DB-ORCL/U	WEBStation-AX driver for Oracle database	WEBs-AX Supervisors
S-DB-SQL/U	WEBStation-AX driver for Microsoft SQL database	WEBs-AX Supervisors
Honeywell AX Supervisor Software		
SUP-REN-ASD/U	Annual Renewals for ASD	WEBs-AX Supervisors
SUP-REN-CON/U	Annual Renewals for Contractors	WEBs-AX Supervisors
SUP-SWAM-AX	Annual Maintenance for Supervisors	WEBs-AX Supervisors
Honeywell Energy Analytics Solution based on WEBs-AX platform		
WES-PNT-AX/U	WEBs Energy Analytics Point License. Licenses one point for monitoring on a WEBs-AX Supervisor	WEBs-AX Supervisors
WES-STA-AX/U	WEBs Energy Analytics Station License. Licenses one controller station connection to Energy Analytics with unlimited points.	WEBs-AX Supervisors

WEBs-AX Platform - Accessories

Application: Accessory-Parts
Compatible With: WEB-201, WEB-600
Approximate, Dimensions: 6 ft Long (2 Meter Long)
Building Management Interface: WEBs-AX

Material Number	Description	Used With
H-GPRS-CBL-EXT/U	GPRS Modem Extension Cable	WEB-201; WEB-600
H-GPRS-SIM-W/U	Wysless SIM card for GPRS Modem	WEB-201; WEB-600
NPB-BATT-7/U	Replacement NiMH Battery for WEB/CP-700 Controller	WEB-700, CP-700
NPB-BATTERY/U	REPLACEMENT BATTERY ASSEMBLY FOR WEB-201 AND WEB-600 CONTROLLERS	WEB-201; WEB-600

WEBs Platform - Accessories

Application: Accessory-Parts
Building Management Interface: WEBs

Material Number	Description	Used With
H10429/U	6 POSITION CONNECTOR FOR IO-16-H AND WEB-IO-16	WEB-545; WEB-403; WEB-201; WEB-600
H10598/U	2 POSITION CONNECTOR FOR IO-34-H AND WEB IO-34	WEB-545; WEB-403; WEB-201; WEB-600
H10599/U	12 POSITION CONNECTOR FOR IO-34-H AND WEB-IO-34	WEB-545; WEB-403; WEB-201; WEB-600
H10600/U	15 POSITION CONNECTOR FOR IO-34-H AND WEB IO-34	WEB-545; WEB-403; WEB-201; WEB-600
H10713/U	3 POSITION SCREW PIN MOUNT CONNECTOR	WEBs-AX Controllers
H10714/U	4 POSITION SCREW PIN MOUNT CONNECTOR	WEBs-AX Controllers
H10716/U	6 POSITION SCREW PIN MOUNT CONNECTOR	WEBs-AX Controllers
H10717/U	7 POSITION SCREW PIN MOUNT CONNECTOR	WEBs-AX Controllers
H10747/U	End of Line Resistor Pack	SEC-H-600, SEC-H-201
H10763/U	6 Conductor Wiring Harness	SEC-H-600, SEC-H-201
H10764/U	6 Conductor Wiring Harness	SLA BATTERY WIRING HARNESSS; SEC-H-600, SEC-H-201
H10765/U	SECURITY ENCLOSURE LOCK W/ KEYS	SEC-H-600, SEC-H-201
H10767/U	Tamper Switch for Security Enclosure	SEC-H-600, SEC-H-201
H11166/U	Replacement right-angle GPRS modem stub antenna	WEB-602-XPR, CP-602-XPR
H11686/U	NPB-ZWAVE replacement RP-SMA coax-mounted antenna (915 MHz)	
H11696/U	Hardware Bag for WEB/CP-700	WEB-700, CP-700
H-CBL-SED-EXT/U	Z-WAVE EXTENSION CABLE	

WEBs-AX Platform

Application: Option Card
Building Management Interface: WEBs-AX

Material Number	Description	Used With
Option Card – Option Cards for WEB-201, 600 controllers.		
DR-NS-BAC-CLI/U	BACnet IP Client Driver, includes license for 500 BACnet points. WEBs-AX Supervisor License	WEBs-AX Platform
Software-Driver – Honeywell AX software drivers and options for P/C Workstations		
DR-NS-BAC-AWS-UP/U	Upgrade from an Operator Workstation (OWS) to an Advanced Workstation (AWS). WEBs-AX Supervisor Upgrade	
DR-NS-BAC-CL-UP/U	BACnet Client Upgrade, adds BACnet IP client functions to a BACnet IP server for the WEB-AX Supervisor. Includes license for 500 BACnet points.	WEBs-AX Platform
DR-NS-BACNET/U	BACnet IP Client driver with BACnet Export functions for WEBs-AX Supervisor. Includes license for 500 BACnet points. Note: Adding OWS and AWS to this part invalidates the BTL listing	
DR-NS-BAC-OWS/U	Add BACnet Operator Workstation (OWS) to the WEBs-AX Supervisor, requires the BACnet IP Client driver	
DR-NS-BAC-SRV/U	BACnet IP Server for the WEBs-AX Supervisor	WEBs-AX Platform
DR-NS-BAC-SRV-UP/U	Add BACnet export functions to a BACnet IP Client Driver for the WEBs-AX Supervisor	WEBs-AX Platform
DR-SOX-ETH-AX/U	Sedona Framework SOX driver allows for WEBs Controller communication to Sedona Framework enabled Ethernet and Wi-Fi networks. Unlimited network point and device counts. Controller Wi-Fi option card NOT INCLUDED. Requires WEBs-AX 3.6 or later.	WEBs-AX Platform
DR-SOX-JEN-AX/U	Allows WEBs Controller to communicate to Sedona Framework enabled Jennic 802.15.4 wireless networks. Unlimited network point and device counts. Sedona Framework Jennic Option Card for RF communication NOT INCLUDED. Requires WEBs-AX 3.6 or later.	WEBs-AX Platform
DR-S-SOX-ETH-500/U	Additional 500 point block for Sedona Framework SOX communication driver allowing for Supervisor communication to Sedona Framework enabled Ethernet and Wi-Fi networks. Requires WEBs-AX 3.6 or later.	WEBs-AX Platform
DR-S-SOX-ETH-AX/U	Sedona Framework SOX driver allows for WEBs Controller communication to Sedona Framework enabled Ethernet and Wi-Fi networks. Unlimited network point and device counts. Controller Wi-Fi option card NOT INCLUDED. Requires WEBs-AX 3.6 or later.	WEBs-AX Platform

WEBs-AX Software

Application: Software
Used With: WEBs-AX Platform
Building Management Interface: WEBs-AX

Material Number	Description
WEB-MA-AX/U	WEBs-AX Annual Software Maintenance

Honeywell Security Portfolio

Flexibility is the key to Honeywell WEBs-AX™ Security, which is built on the NiagaraAX Framework®. Whether you need single site or enterprise access control, intrusion detection, video surveillance or a combination of all, WEBs-AX Security has the solution for you.

WEBs-AX Security can work as a standalone system or integrate easily with other WEBs-AX products as well as third-party devices for information-sharing on the enterprise level.

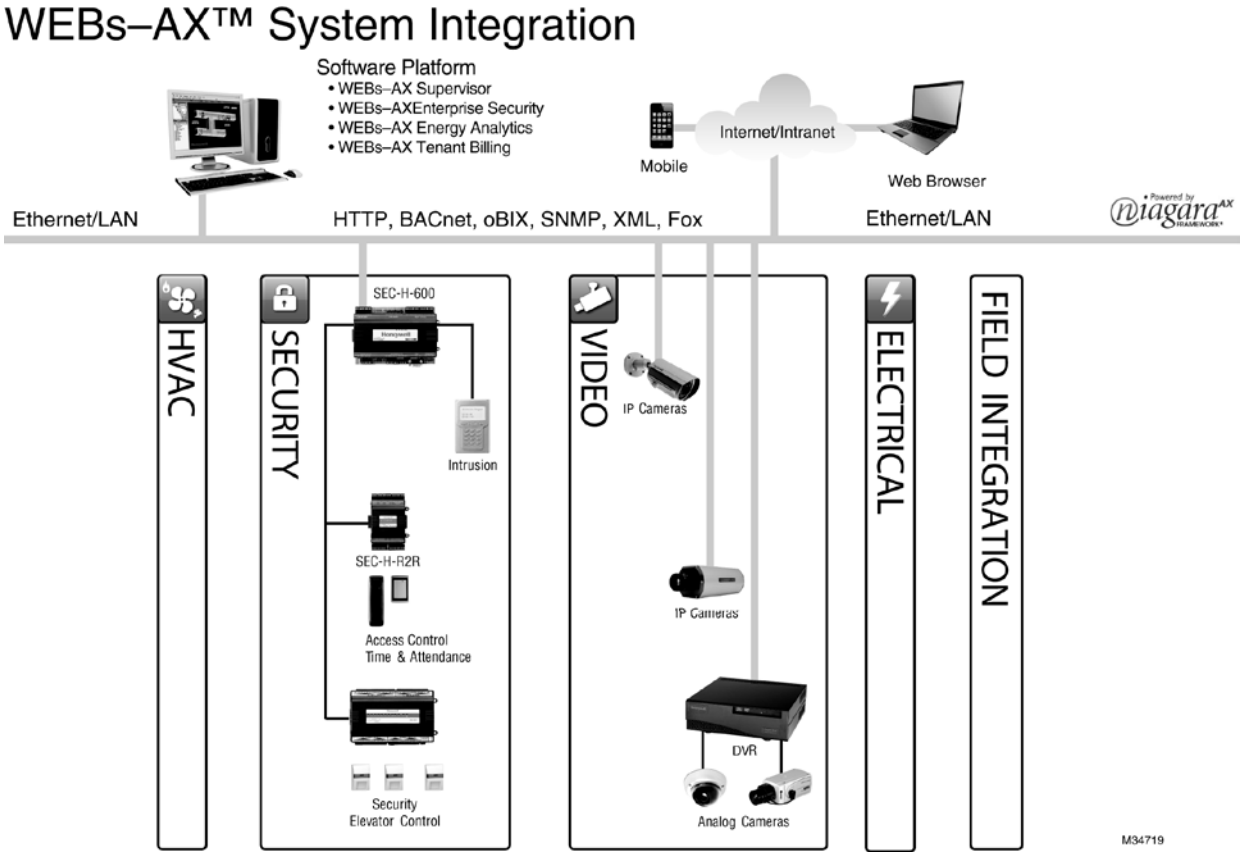

WEBs-AX Security Solution Options

- WEBs-AX Enterprise Security—A comprehensive security and access control system for one or more facilities and integration with existing building systems including HVAC, lighting, video, and energy analysis. Ideal for single medium to large facilities or multi-site facilities.
- WEBs-AX Standalone Security—An out-of-the-box, Web-enabled solution for access control, intrusion detection, and video surveillance. Ideal for small to medium sized facilities.
- WEBs-AX Compact Security—A cost-effective solution for integrating access control, security, video surveillance, and building automation systems. A cost-effective solution for small to medium sized facilities.
- WEBs-AX Integrated Video—Video drivers that provide an open video framework designed to integrate with diverse manufacturer IP and analog devices and protocols.

WEBs-AX Security Solutions

Facility	Doors	Open System Integration Capable	Solution	Selection Information
Single Facility	< 32	No	Standalone Security	See Security Controllers on page 8
Single Facility	< 16	Yes	Compact Security	See Security Controller with Compact Drivers on page 8
Single Facility	32+	Yes	Enterprise Security	See Security Controllers (page 8); Security with Compact Drivers (page 8) and Enterprise Security (page 9)
Multiple Facility	Unlimited	Yes	Enterprise Security	

WEBs-AX Security System

WEBs-AX Security Controllers Selection

Features and Options			
Controllers		**SEC-H-602**	**SEC-H-616**
	Card Readers	2 with option for 32 max*	16 with option for 16 max*
	Digital Input/Output Points	120/120*	120/120*
	Remote Reader Modules (R2R)	15*	15*
	Remote I/O Modules (RIO)	15*	15*
	Intrusion Keypads	6	6
	Personnel	20,000	20,000
	Access Rights	250	250
	Access Zones	50	50
	Intrusion Zones	25	25
	On-line Historical Records	50,000	50,000
	Simultaneous System Users	10	10
Video Drivers	DR-JAC-MAXPRO-4	**MAXPRO NVR & 4 Cameras	**MAXPRO NVR & 4 Cameras
	DR-JAC-DED-AX/U	**Dedicated Micros DVR & 4 Cameras	**Dedicated Micros DVR & 4 Cameras
	DR-JAC-AXS-4/U	**4 Axis IP Cameras	**4 Axis IP Cameras
	DR-JAC-MLS-4/U	**Mileston NVR & 4 Cameras	**Mileston NVR & 4 Cameras
	DR-JAC-RPD-4/U	**Rapid Eye DVR & 4 Cameras	**Rapid Eye DVR & 4 Cameras
Integration Options	Video (Cameras)	16	16

* A total of 15 modules can be connected to the SEC-H-602 or SEC-H-616 controllers in any combination. Points and reader counts depend on mix of reader modules up to a maximum of 120 I/O regardless of number of modules.
** Any combination of Video Drivers can be added to enable a maximum of 16 cameras per controller.

WEBs-AX Compact Security Selection

Features and Options		DR-SEC-LON (LON Focus)	DR-SEC-BAC (BACnet Focus)	DR-SEC-LON-FTT	DR-SEC-BAC-MSTP	DR-SEC-BAC-TCP	DR-SEC-MDB-RTU	DR-SEC-MDB-TCP
Controller		SEC-H-616 or SEC-H-602 with the addition of the SEC-H-602-UP option						
Security Capabilities	Card Readers	16*						
	Digital Inputs/Output Points	120/120*						
	Remote Reader Modules (R2R)	15**						
	Remote I/O Modules (RIO)	15**						
	Intrusion Keypads	2						
	Personnel	20,000						
	Access Zones	50						
	Intrusion Zones	25						
	On-line Historical Records	50,000						
	Point Histories	No Limit	No Limit	300	300	300	300	300
	Simultaneous System Users	10						
Video Drivers	DR-JAC-MAXPRO-4	**MAXPRO NVR & 4 Cameras						
	DR-JAC-DED-AX/U	Dedicated Micros DVR & 4 Cameras						
	DR-JAC-AXS-4/U	4 Axis IP Cameras						
	DR-JAC-MLS-4/U	**Mileston NVR & 4 Cameras						
	DR-JAC-RPD-4/U	**Rapid Eye DVR & 4 Cameras						
Open Device/ Points Supported	LonWorks Devices/Points	60 / 2000	5 / 100	60 / 2000				
	BACnet Devices/Points (IP or MSTP)	5 / 100	60 / 2000		60 / 2000			
	BACnet IP Devices/Points					60 / 2000		
	Modbus TCP Devices/Points	5 / 100	5 / 100					60 / 2000
	Modbus RTU Devices/Points	5 / 100	5 / 100				60 / 2000	
	SNMP (over Ethernet) Devices/Points	5 / 100	5 / 100					
Integration Capabilities	Video (Cameras)	16 Cameras						
	HVAC	.						
	Lighting	.						
	Other Open Systems	.						

* A total of 16 modules can be connected to the SEC-H-602 or SEC-H-616 controllers in any combination. Points and reader counts depend on mix of reader modules.
** A total of 15 modules can be connected to the SEC-H-602 or SEC-H-616 in any combination. Points and reader counts depend on mix of reader modules.

WEBs-AX™ Enterprise Security Software

WEBs-AX Enterprise Security is a comprehensive access control and security management solution, built on a truly open, IP based platform. Developed using the NiagaraAX Framework, WEBs-AX Enterprise Security provides unparalleled interoperability within traditional security environments and extends seamlessly to create a unified, intelligent building by integrating with today's diverse facility systems including environmental controls, lighting, energy management, and video.

Enterprise Security provides scalability ranging from single door solutions to multi-building/multi-campus deployments. Entirely accessible from any standard web browser, the solution provides flexible access into the system any time, anywhere, while liberating end users from dedicated client workstations in the traditional client /server model. WEBs-AX Enterprise Security is open – open architecture, open framework, open distribution, and open protocol support.

- Truly open solution-connectivity via oBIX, BACnet, SNMP, Modbus, Lon, and other optional non-proprietary protocols
- Web based security application – easily managed via a standard browser anytime, anywhere
- Supports database connectivity to MS SQL Server 2003 and MySQL
- Distributed architecture for increased reliability and control at remote locations
- Centrally managed card holder and credential database
- Quick click access to video playback related to individual alarm events
- UL-294 and CE listed systems
- Advanced occupancy restriction rules through access zone functionality
- Alarm Escalation
- Scheduled unlock on first validation
- Elevator control
- Live credential enrollment from any card reader
- Intrusion detection
- Configurable Operator Access Levels
- Simultaneous support for multiple credential formats

System Capacities

Personnel	Card Readers	Access Rights	Schedules	Access Zones	On-Line History Records	Simultaneous System Users	Area Controllers	Integrated Cameras
1,000,000	10,000	25,000	25,000	25,000	25,000,000	25	500	No Limit

Product Number	Description
WEBs-AX Enterprise Security Server Software	
SEC-H-ENT-6/U	WEBs-AX Security SBS, includes enterprise security application with 32 reader license, both MySQL and MS SQL Server database drivers and OBIX client/server driver for connecting to Niagara based controllers only. 6 Controller and 64 Reader Limit.
SEC-H-ENT-100/U	Security Supervisor with MySQL and MS SQL Includes enterprise security application with 32 reader license, WEBs-AX Security Supervisor, both MySQL and MS SQL Server database drivers and OBIX client/server driver for connecting to Niagara based controllers only. Max of 100 Security Controllers.
SEC-H-ENT-250/U	Security Large System Supervisor with MySQL and MS SQL. Includes enterprise security application with 32 reader license, WEBs-AX Security, and both MySQL and MS SQL Server database drivers. 250 Controller Limit. Includes OBIX client/server driver for connecting to Niagara based controllers only.
SEC-H-U-100/U	Security ENT upgrade. Upgrade an existing SEC-H-ENT-6 SBS Security Supervisor to a SEC-H-ENT-100 Security Supervisor. Supervisor requires additional reader licenses to expand system capacity.
SEC-H-U-250/U	Security ENT upgrade. Upgrade an existing SEC-H-ENT-100 Security AX Supervisor to a SEC-H-ENT-250 Large System Security Supervisor. Supervisor requires additional reader licenses to expand system capacity.
SEC-H-REV-6/U	New release software upgrade for Enterprise Security Small Building Supervisor. Price includes all applications and drivers licensed for the Supervisor. Upgrades the Supervisor to the current release.
SEC-H-REV-100/U	New release software upgrade for Enterprise Security Supervisor. Price includes all applications and drivers licensed for the Supervisor. Upgrades the Supervisor to the current release.
SEC-H-REV-250/U	New release software upgrade for Enterprise Security Large System Supervisor. Price includes all applications and drivers licensed for the Supervisor. Upgrades the Supervisor to the current release.
SEC-H-ENT-6-MA/U	Annual software maintenance agreement when purchased with any Security Small Building Supervisor. Includes new and interim releases for one year from date of purchase.
SEC-H-ENT-100-MA/U	Annual software maintenance agreement when purchased with any Enterprise Security Supervisor. Includes new and interim releases for one year from date of purchase.
SEC-H-ENT-250-MA/U	Annual software maintenance agreement when purchased with any Large Scale Enterprise Security Supervisor. Includes new and interim releases for one year from date of purchase.

Option Cards

Option Cards for WEB-201, 600 controllers.

Operating Temperature Range: 32°F to 122°F (0°C to 50°C)
Shipping and Storage Temperature Range: 32°F to 140°F (0°C to 60°C)
Operating Humidity Range (% RH): 5 to 95% RH, non-condensing
Building Management Interface: WEBs-AX

Material Number	Application	Description	Operating System	
NPB-2X-REDLINK	Optional RedLINK Communications Card	RedLINK Communication Card for WEB-201/600/700		
NPB-2X-RS485/U	Optional Communications Card	Dual Port RS-485 Communication Card for WEB-201/600/700	The controller requires NiagaraAX build level 3.1.24 or higher	
NPB-LON/U	Optional Communications Card	LonWorks Communication Card for WEB-201/600/700		
NPB-RS232/U	Optional Communications Card	Single Port RS-232 Communication Card for WEB-201/600/700		
NPB-WIFI-7/U	Optional Wireless LAN Connection Card	MiniPCI WiFi 802.11 b/g option card for WEBs-700	Requires a WEB-700 controller with QNX operating system and WEBs-AX Release 3.6 or later for operation	

Modules

Honeywell WEBs-AX™ Security Modules expand the capacity of WEBs-AX Security Controllers.

- Available in SEC-H-RIO, remote input/output module, and SEC-H-R2R remote reader modules

Used With: WEBs-AX Platform
Operating Temperature Range: 32°F to 122°F (0°C to 50°C)
Shipping and Storage Temperature Range: 32°F to 140°F (0°C to 60°C)
Approvals, Underwriters Laboratories Inc.: UL Listed
Approvals, CSA: CSA C22.2 No. 205-M1983 Signal Equipment
Approvals, FCC: FCC part 15 Class A
Operating Humidity Range (% RH): 5 to 95% RH, non-condensing
Building Management Interface: WEBs-AX

Material Number	Application	Description	I/O Count	Network Communications	Approvals, CE	Includes	
IO-16-REM-H/U	Input / Output Expansion Module	16 Point Remote Input / Output Expansion Module to monitor and control building automation points	8 Universal Inputs, 4 Digital Relay Outputs, 4 Analog Outputs		Approved		
SEC-H-R2R/U	WEBs-AX Remote Reader Module	WEBs-AX Security 2 Reader Module to expand the capacity of your WEBs-AX Security Controller	2 proximity card readers, 4 Supervised Inputs, 2 Form C Relay Outputs, 2 Digital Inputs.	2 Ethernet Ports - 10/100 Mbps (RJ-45 Connectors); 1 RS 232 Port (9 pin D-shell connector); 1 RS 485		Contains removable screw terminal connectors, and status indication LEDs	
SEC-H-RIO/U	WEBs-AX Input / Output Module	WEBs-AX Security Input/Output Module to expand the capacity of your WEBs-AX Security Controller	8 Supervised Inputs, 8 Form C Relay Outputs, 2 Digital Inputs	2 Ethernet Ports - 10/100 Mbps (RJ-45 Connectors); 1 RS 232 Port (9 pin D-shell connector); 1 RS 485		Contains removable screw terminal connectors, and status indication LEDs	

Compact Security Solution Drivers

WEBs Security Solution provides a cost-wise option on the SEC-H-600 platform. A LON or BACnet Focused Driver Option Pack determines device integration. WEBs-AX applications allow thin-client configuration of the access control and security functions.

Application: Software-Driver
Used With: WEB-S-AX; WEB-S-AX-LNX; WEB-S-AX-64; WEB-S-AX-SBS
Compatible With: WEB-S-AX, WEB-S-AX-SBS, W-SJ-1M-AX
Building Management Interface: WEBs-AX

Material Number	Description	Includes
DR-SUP-AXS-4/U	WEB Supervisor Video Driver for 4 additional Axis cameras	Driver for 4 additional cameras. Requires DR-SUP-DED-AX.
DR-SUP-AXS-AX/U	WEB Supervisor BASE Video Driver for Axis Cameras	Base driver for Dedicated Micros DVR and 16 cameras
DR-SUP-DED-4/U	WEB Supervisor Video Driver for 4 additional cameras	Driver for 4 additional cameras. Requires DR-SUP-DED-AX.
DR-SUP-DED-AX/U	WEB Supervisor BASE Video Driver for Dedicated Micros DVR	Base driver for Dedicated Micros DVR and 16 cameras
DR-SUP-MLS-4/U	WEB Supervisor Video Driver for 4 additional Axis cameras	Driver for 4 additional cameras. Requires DR-SUP-DED-AX.
DR-SUP-MLS-AX/U	WEB Supervisor BASE Video Driver for Axis Cameras	Base driver for Dedicated Micros DVR and 16 cameras

Compact Security Solution Drivers

WEBs Compact Security Solution provides a cost-effective solution for integrating access control, security, video surveillance, and building automation on the SEC-H-600 platform. A Lon or BACnet Focused Driver Option Pack determines the mix of controlled devices that can be integrated onto the platform. The embedded WEBs-AX security control application allows thin-client configuration of the access control and security functions. WEBs-AX Workbench software is required for configuration of the HVAC devices. Note that card reader and personnel record capacities are reduced when using the Compact Security Drivers. Option cards to interface with BACnet, Lon, Modbus, and SNMP are ordered separately.

- Web based security application easily managed via a standard browser anytime, anywhere
- Truly open solution-connectivity via oBIX, BACnet, SNMP, Modbus, Lon, and other optional nonproprietary protocols
- Supports database connectivity to MS SQL Server 2003 and MySQL
- Distributed architecture provides increased reliability and control at remote locations
- Centrally managed card holder and credential database. Live credential enrollment from any card reader, and simultaneous support for multiple credential formats.
- UL-294 and CE listed systems
- Configurable Operator Access Levels
- Advanced occupancy restriction rules through access zone functionality
- Features alarm escalation, elevator control, intrusion detection, scheduled unlock on first validation, and quick click access to video playback related to individual alarm events

Application: Software-Driver
Building Management Interface: WEBs-AX

Material Number	Description	Compatible With	Used With	Includes
Compact Security Solution Drivers				
DR-JAC-AXS-4/U	WEB Video Driver for 4 Axis cameras	SEC-H-600, WEB-600	SEC-H-600; WEB-600	Driver for Dedicated Micros DVR and 4 cameras. 16 camera limit for each WEB-600 or SEC-H-600.
WEBs-AX Enterprise Security Software				
DR-JAC-DED-AX/U	WEB Video Driver for 4 cameras	SEC-H-600, WEB-600	WEB-600; SEC-H-600	Driver for Dedicated Micros DVR and 4 cameras. 16 camera limit for each WEB-600 or SEC-H-600.
DR-JAC-MLS-4/U	WEB Video Driver for 4 Axis cameras	SEC-H-600, WEB-600	SEC-H-600; WEB-600	Driver for Dedicated Micros DVR and 4 cameras. 16 camera limit for each WEB-600 or SEC-H-600.
DR-SEC-BAC/U	BACnet focused Driver Pack	SEC-H-600	SEC-H-600	Driver for 60 LON devices, 2000 LON points, 5 BACnet Devices, 100 BACnet points, 5 Modbus devices (TCP or RTU), 100 Modbus points, 5 SNMP devices, 100 SNMP points; Driver for 60 BACnet devices, 2000 BACnet points, 5 Lon devices, 100 Lon points, 5 Modbus
DR-SEC-LON/U	LON focused Driver Pack	SEC-H-600	SEC-H-600	Driver for 60 LON devices, 2000 LON points, 5 BACnet Devices, 100 BACnet points, 5 Modbus devices (TCP or RTU), 100 Modbus points, 5 SNMP devices, 100 SNMP points

Readers and Keypads

OmniProx™ Proximity Card Readers

Honeywell's OmniProx™ family is a complete line of 125 kHz HID compatible proximity readers that delivers outstanding and consistent performance in a small package with attractive styling and colors to fit any décor.

All OmniProx™ readers (except the OP90) include three bezels: black, charcoal gray and ivory and are constructed with rugged polycarbonate materials potted for both indoor and outdoor applications.

For locations that require a proximity reader able to withstand the vandal-prone environments, such as: universities, schools, elevators and prisons, the OP90 vandal-resistant reader comes standard in a zinc die-cast metal housing.

Building Management Interface: WEBs-AX

Material Number	Description	Application	Used With	
OKH2N34	OmniClass 16K PVC Card plus HID Prox (34-Bit)	Card plus HID Prox	WEBs-AX Platform	
OKP2N34	OmniClass 16K PVC Card (34-Bit)	OmniClass PVC Card	WEBs-AX Platform	
OP10HONE	OmniProx Small Mount Reader with Honeywell Logo	Card Reader		
OP10HONR	OmniProx HID Compatible, Smallest Mullion Reader 2”/5 cm - Honeywell logo RoHS Compliant	Card Reader		
OP30HONE	OmniProx Mullion Mount Reader with Honeywell Logo	Card Reader		
OP30HONR	OmniProx HID Compatible, Mini Mullion Reader 3.5”/8.9 cm - Honeywell logo RoHS Compliant	Card Reader		
OP40HONE	OmniProx Wall Mount Reader with Honeywell Logo	Card Reader		
OP40HONR	OmniProx HID Compatible, Single-Gang (US) Reader 4”/10.2 cm - Honeywell Logo RoHS Compliant	Card Reader		
OP90HONE	OmniProx Vandal Resistant Mount Reader with Honeywell Logo	Card Reader		
OP90HONR	OmniProx HID Compatible, metal, single or double-gang (US) reader 2”/5 cm - Honeywell logo RoHS Compliant	Card Reader		

Readers and Keypads

Smartkey Intrusion Keypad and Display

The SEC-H-INT-KP Smartkey Intrusion Keypad and Display is used for arming and disarming areas protected by intrusion monitoring. Requires NPB-2X-RS485 Option card to interface with and SEC-H-600 and SEC-H-201.

Comments: Requires NPB-2X-RS485 Option Card
Compatible With: SEC-H-201, SEC-H-600
Power Consumption: 150 mA
Voltage: 12 Vdc
Operating Temperature Range: 14°F to 131°F (-10°C to 44°C)
Approximate, Dimensions: 3-5/32 in. wide x 5 in. high (80 mm wide x 127 mm high)
Shipping and Storage Temperature Range: 14°F to 131°F (-10°C to 55°C)
Building Management Interface: WEBs-AX
Network Communications: RS-485

Material Number	Description	Application	
SEC-H-INT-KP/U	WEBs Security Intrusion Keypad / Display	Display/Keypad	

Enclosures

Custom enclosures are available for secure mounting of the WEBs-AX Security controller and the Remote Reader and Input/Output modules. Three sizes are available to allow for various combinations of controllers and remote modules and all are equipped with a key lock and tamper switch. The medium and large enclosures may be ordered with a factory mounted universal voltage power supply (NPB-PWR-UN-H) covered by a protective metal shield. Knockouts are provided on top, bottom and sides for external connections. The enclosure interiors have a generous amount of space for cable management. These enclosures are required to maintain the UL access control and FCC listing. The Security controller MUST be mounted in a WEBs-AX Security enclosure with integral supply to properly charge the on-board NiMH batteries and maintain the controller listings.

- Three sizes of custom enclosures available for various combinations of controllers/modules
- Enclosures equipped with key lock and tamper switch

Used With: WEBs-AX Platform
Building Management Interface: WEBs-AX

Material Number	Application	Description	
SEC-ENC-H-1/U	Enclosure	Security panel medium enclosure with integral NPB-PWR-UN-H universal power supply. 17" W x 15" H x 4" D with DIN rail, tamper switch, key lock, and capacity for 2 user provided SLA backup batteries. Can enclose one Security Controller, or 2 reader modules or one Remote I/O module.	
SEC-ENC-H-1NP/U	Enclosure	Security panel medium enclosure. 17" W x 15" H x 4" D with DIN rail, tamper switch, key lock, and capacity for 2 user provided SLA backup batteries. Can enclose 2 reader modules or one Remote I/O module plus one additional reader module in place of the integral power supply not included with this part.	
SEC-ENC-H-2/U	Enclosure	Security panel large enclosure with integral NPB-PWR-UN-H universal power supply. 17" W x 22" H x 4" D with DIN rails, tamper switch, key lock, and capacity for 2 user provided SLA backup batteries. Can enclose one Security Controller and up to four Reader Modules, or two I/O modules, or two Reader Modules and one I/O Module.	
SEC-ENC-H-2NP/U	Enclosure	Security panel large enclosure. 17" W x 22" H x 4" D with DIN rails, tamper switch, key lock, and capacity for 2 user provided SLA backup batteries. Can enclose up to seven Reader modules or three I/O modules plus one additional Reader module in place of the integral power supply not included with this part. Other combinations of Reader and I/O modules are possible.	
SEC-ENC-H-3/U	Enclosure	WEBs-AX Security Small enclosure 6 in. W x 9 in. H x 4 in. D with DIN rail, tamper switch and key lock. Encloses one Reader module.	
NPB-PWR-UN-H/U	Power Module	90 - 263 V AC 50/60 Hz Auto sensing Power Supply Module, DIN Rail Mountable 15 VDC Output.	

SEC-H-6XX Controllers

WEBsAX provides automation, allowing users to combine multiple protocols with legacy systems and use the web to view and edit underlying systems. The Security Controller is a web based out of the box answer for access control and intrusion detection.

- Integrated management of access control, alarm monitoring, and credential database
- Pre-defined custom reports on-screen or exported
- Web-based security application - easily managed via a web browser anytime, anywhere
- Web User Interface serves rich presentations and live data to a browser
- No thick client software required
- Custom graphic floor plans and equipment displays
- User-definable Wiegand card formats
- Intuitive, guided setup wizard
- Robust, modular solution for smaller facilities
- Seamlessly integrates to HVAC, Lighting, and Energy Management in the WEBsAX Automation System
- Connectivity to any BAS system via BACnet®, and oBIX
- IT connectivity includes XML, oBIX, SNMP
- Built on the NiagaraAX Framework - the industry's leading facility management software platform
- SEC-H-201: Expandable to 16 readers and 64 input and 64 output points. Up to 2500 personnel credentials
- SEC-H-600: Expandable to 32 readers / 120 input and 120 output points. Up to 10,000 personnel credentials.

Application: Controller
Includes: 256 MB RAM/128 MB Flash, (2) 10/100 Mb Ethernet ports, (1) RS-485 serial port, (1) RS-232 serial port, and 2 communication card option slots.
Used With: WEBs-AX Platform
Frequency: 50 Hz; 60 Hz
Operating Temperature Range: 32°F to 122°F (0°C to 50°C)
Shipping and Storage Temperature Range: 32°F to 140°F (0°C to 60°C)

Approvals, FCC: FCC part 15 Class A
Operating System: QNX RTOS; IBM J9 JVM Java Virtual Machine; NiagaraAX
Operating Humidity Range (% RH): 5 to 95% RH, non-condensing
System Requirements: PowerPC 440 524 MHz processor with 256 MB DDR RAM & 128 MB Serial Flash
Building Management Interface: WEBs-AX
Network Communications: 2 Ethernet Ports - 10/100 Mbps (RJ-45 Connectors); 1 RS 232 Port (9 pin D-shell connector); 1 RS 485

Material Number	Description	Comments
SEC-H-602	WEBs-AX Security Enhanced Controller	The Security Controller is designed for DIN rail mounting; Licensed for 2 Card Readers, Security and Videos, Connections for 2 Card Readers, 6 Supervised Inputs, 4 Form C Relay Outputs, and 3 Digital Inputs.
SEC-H-616	WEBs-AX Security Enhanced Controller	The Security Controller is designed for DIN rail mounting; Licensed for 16 Card Readers, Security, Videos and HVAC, Connections for 2 Card Readers, 6 Supervised Inputs, 4 Form C Relay Outputs, and 3 Digital Inputs.
SEC-H-616-DEMO	WEBs-AX Security 616 Demo Controller Kit	Licensed for 16 Card Readers, Security, Videos and HVAC, Connections for 2 Card Readers, 6 Supervised Inputs, 4 Form C Relay Outputs, and 3 Digital Inputs.

SEC-H-6XX Controller Accessories

Used With: WEBs-AX Platform

Material Number	Description	Compatible With
SEC-602-UP	Security SEC-H-602 controller upgrade. Upgrades the SEC-H-602 controller to a SEC-H-616 controller license, supporting a minimum of 16 card readers. Upgrade also enables support for HVAC drivers on the security controller.	SEC-H-602
SEC-8-RDR	Security eight reader expansion module. Increases the maximum number of readers on a SEC-H-602 or SEC-H-616 by eight readers.	SEC-H-602, SEC-H-616

WEBs-AX™ Enterprise Security Software

Honeywell WEBs-AX™ Enterprise Security is a comprehensive access control and security management solution built on a truly open, IP based platform. It uses NiagaraAX Framework, for unparalleled interoperability in traditional security environments.

- Web based security application easily managed via a standard browser anytime, anywhere
- Truly open solution-connectivity via oBIX, BACnet, SNMP, Modbus, Lon, and other optional nonproprietary protocols
- Supports database connectivity to MS SQL Server 2003 and MySQL
- Distributed architecture provides increased reliability and control at remote locations
- Centrally managed card holder and credential database. Live credential enrollment from any card reader, and simultaneous support for multiple credential formats.
- UL-294 and CE listed systems
- Configurable Operator Access Levels
- Advanced occupancy restriction rules through access zone functionality
- Features alarm escalation, elevator control, intrusion detection, scheduled unlock on first validation, and quick click access to video playback related to individual alarm events

Building Management Interface: WEBs-AX

Material Number	Description	Application	Compatible With	Operating System	Used With
SEC-H-BAS-U/U	Upgrade security supervisor to allow BAS driver functionality.	Software-Driver	SEC-H-201, SEC-H-600	Windows NT, Windows 64, Linux	SEC-H-600, SEC-H-201
SEC-H-ENT-U/U	Adds Enterprise Security to WEBs-AX or SBS Supervisor. Includes 32 reader license and both SQL/MySQL database drivers.	Security Supervisor			
SEC-H-R-1024/U	Expands enterprise security license by 1024 readers.	Software-Driver	SEC-H-201, SEC-H-600		SEC-H-600, SEC-H-201
SEC-H-R-16/U	Expands enterprise security license by 16 readers.	Software-Driver	SEC-H-201, SEC-H-600		SEC-H-600, SEC-H-201
SEC-H-R-256/U	Expands enterprise security license by 256 readers.	Software-Driver	SEC-H-201, SEC-H-600		SEC-H-600, SEC-H-201
SEC-H-R-64/U	Expands enterprise security license by 64 readers.	Software-Driver	SEC-H-201, SEC-H-600		SEC-H-600, SEC-H-201

WEBs-AX Enterprise Security Software

Honeywell WEBs-AX™ Enterprise Security is a comprehensive access control and security management solution built on a truly open, IP based platform. It uses NiagaraAX Framework, for unparalleled interoperability in traditional security environments.

- Web based security application easily managed via a standard browser anytime, anywhere
- Truly open solution-connectivity via oBIX, BACnet, SNMP, Modbus, Lon, and other optional nonproprietary protocols
- Supports database connectivity to MS SQL Server 2003 and MySQL
- Distributed architecture provides increased reliability and control at remote locations
- Centrally managed card holder and credential database. Live credential enrollment from any card reader, and simultaneous support for multiple credential formats.
- UL-294 and CE listed systems
- Configurable Operator Access Levels
- Advanced occupancy restriction rules through access zone functionality
- Features alarm escalation, elevator control, intrusion detection, scheduled unlock on first validation, and quick click access to video playback related to individual alarm events

Application: Software
Building Management Interface: WEBs-AX

Material Number	Description	Used With
SEC-H-MT-AX/U	WEBs-AX Security Maintenance Software	WEBs-AX Platform

Miscellaneous

Material Number	Description	Used With
H10499/U	Replacement NiMH Battery Pack for Security Controllers	SEC-H-600, SEC-H-201

Spyder Programmable Controllers

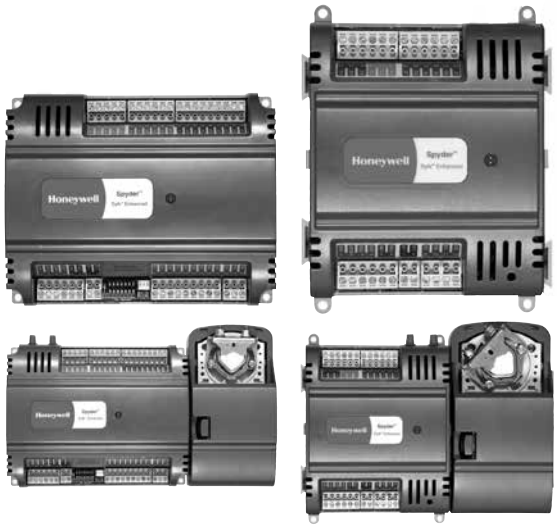

Spyder® continues to evolve and is now a more flexible controller that is easier to use and designed for faster installation and programming. Built to work with the WEBs-AX system, Spyder gives you the versatility you need to control more of your building's systems, and the flexibility to communicate with the protocols you're using. So whether you choose the Spyder, Spyder Micro or Spyder with Relays, you'll have the right controllers, which can be installed faster for more competitive bids.

Application Size: Small to Large
Comments: Onboard 20 VDC power supply
Compatible With: WEBs AX
Frequency: 50 Hz; 60 Hz
Voltage: 24 Vac with a valid range of 20 to 30 Vac
Setpoint Temperature Range: Programmable
Shipping and Storage Temperature Range: -40°F to 150°F (-40°C to 65.5°C)
Approvals, Underwriters Laboratories Inc.: UL 916
Approvals, CSA: Certified
Approvals, FCC: FCC Part 15, Subpart B, Class B
Approvals, CE: Approved
Operating Humidity Range (% RH): 5 to 95% RH, non-condensing
Commissioning Software: WEBs AX

Material Number	Description	I/O Count	Output Type	Power Consumption	Operating Temperature Range	Approximate, Dimensions	Building Management Interface	Network Communications	Includes
Unitary									
PUB1012S/U	Spyder Programmable Unitary Controller	1 UI, 0 DI, 1 AO, 2 DO	Pulse Width Modulation, Floating, Staged On/Off	5 VA	-40°F to 150°F (-40°C to 65.5°C)	6.27 in. high x 4.8125 in. wide x 2.26 in. deep (159 mm high x 122 mm wide x 57 mm deep)	WEBs-AX	BACnet MS/TP	
PUB1012S-ILC/U	Spyder ILC Programmable Unitary Controller	1 UI, 0 DI, 1 AO, 2 DO	Pulse Width Modulation, Floating, Staged On/Off	5 VA	-40°F to 150°F (-40°C to 65.5°C)			BACnet	
PUB4024S/U	Spyder Programmable Unitary Controller	4 UI, 0 DI, 2 AO, 4 DO	Pulse Width Modulation, Floating, Staged On/Off	5 VA	-40°F to 150°F (-40°C to 65.5°C)		WEBs-AX	BACnet MS/TP	
PUB4024S-ILC/U	Spyder ILC Programmable Unitary Controller	4 UI, 0 DI, 2 AO, 4 DO	Pulse Width Modulation, Floating, Staged On/Off	5 VA	-40°F to 150°F (-40°C to 65.5°C)			BACnet	
PUB6438S/U	Spyder Programmable Unitary Controller	6 UI, 4 DI, 3 AO, 8 DO	Pulse Width Modulation, Floating, Staged On/Off	5 VA	-40°F to 150°F (-40°C to 65.5°C)	5.45 in. high x 6.85 in. wide x 2.26 in. deep (138.4 mm high x 174 mm wide x 57.4 mm deep)		BACnet MS/TP	
PUB6438S-ILC/U	Spyder ILC Programmable Unitary Controller	6 UI, 4 DI, 3 AO, 8 DO	Pulse Width Modulation, Floating, Staged On/Off	5 VA	-40°F to 150°F (-40°C to 65.5°C)			BACnet MS/TP	
PUB6438S-ILC-US/U	Spyder ILC Programmable Unitary Controller	6 UI, 4 DI, 3 AO, 8 DO	Pulse Width Modulation, Floating, Staged On/Off	5 VA	-40°F to 150°F (-40°C to 65.5°C)			BACnet MS/TP	
PUB6438SR/U	Spyder Programmable Unitary Controller	6 UI, 4 DI, 3 AO, 8 DO	Relay DO's, Staged On/Off	5 VA	-40°F to 150°F (-40°C to 65.5°C)			BACnet	
PUB6438SR-ILC/U	Spyder ILC Programmable Unitary Controller	6 UI, 4 DI, 3 AO, 8 DO	Relay DO's, Staged On/Off	5 VA	-40°F to 150°F (-40°C to 65.5°C)			BACnet	

Spyder Controllers

Material Number	Description	I/O Count	Output Type	Power Consumption	Operating Temperature Range	Approximate, Dimensions	Building Management Interface	Network Communications	Includes
PUL1012S/U	Spyder Programmable Unitary Controller	1 UI, 0 DI, 1 AO, 2 DO	Pulse Width Modulation, Floating, Staged On/Off	5 VA	-40°F to 150°F (-40°C to 65.5°C)	6.27 in. high x 4.8125 in. wide x 2.26 in. deep (159 mm high x 122 mm wide x 57 mm deep)		LonWorks	
PUL1012S-ILC/U	Spyder ILC Programmable Unitary Controller	1 UI, 0 DI, 1 AO, 2 DO	Pulse Width Modulation, Floating, Staged On/Off	5 VA	-40°F to 150°F (-40°C to 65.5°C)			LonWorks	
PUL1012S-ILC-US/U	Spyder ILC Programmable Unitary Controller	1 UI, 0 DI, 1 AO, 2 DO	Pulse Width Modulation, Floating, Staged On/Off	5 VA	-40°F to 150°F (-40°C to 65.5°C)			LonWorks	
PUL4024S/U	Spyder Programmable Unitary Controller	4 UI, 0 DI, 2 AO, 4 DO	Pulse Width Modulation, Floating, Staged On/Off	5 VA	-40°F to 150°F (-40°C to 65.5°C)			LonWorks	
PUL4024S-ILC/U	Spyder ILC Programmable Unitary Controller	4 UI, 0 DI, 2 AO, 4 DO	Pulse Width Modulation, Floating, Staged On/Off	5 VA	-40°F to 150°F (-40°C to 65.5°C)			LonWorks	
PUL4024S-ILC-US/U	Spyder ILC Programmable Unitary Controller	4 UI, 0 DI, 2 AO, 4 DO	Pulse Width Modulation, Floating, Staged On/Off	5 VA	-40°F to 150°F (-40°C to 65.5°C)			LonWorks	
PUL6438S/U	Spyder Programmable Unitary Controller	6 UI, 4 DI, 3 AO, 8 DO	Pulse Width Modulation, Floating, Staged On/Off	5 VA	-40°F to 150°F (-40°C to 65.5°C)	5.45 in. high x 6.85 in. wide x 2.26 in. deep (138.4 mm high x 174 mm wide x 57.4 mm deep)		LonWorks	
PUL6438S-ILC/U	Spyder ILC Programmable Unitary Controller	6 UI, 4 DI, 3 AO, 8 DO	Pulse Width Modulation, Floating, Staged On/Off	5 VA	-40°F to 150°F (-40°C to 65.5°C)			LonWorks	
PUL6438S-ILC-US/U	Spyder ILC Programmable Unitary Controller	6 UI, 4 DI, 3 AO, 8 DO	Pulse Width Modulation, Floating, Staged On/Off	5 VA	-40°F to 150°F (-40°C to 65.5°C)			LonWorks	
PUL6438SR/U	Spyder Programmable Unitary Controller	6 UI, 4 DI, 3 AO, 8 DO	Relay DO's, Staged On/Off	5 VA	-40°F to 150°F (-40°C to 65.5°C)			LonWorks	
PUL6438SR-ILC/U	Spyder ILC Programmable Unitary Controller	6 UI, 4 DI, 3 AO, 8 DO	Relay DO's, Staged On/Off	5 VA	-40°F to 150°F (-40°C to 65.5°C)			LonWorks	
VAV									
PVB0000AS/U	Spyder Programmable VAV Controller	0 UI, 0 DI, 0 AO, 0 DO	Pulse Width Modulation, Floating, Staged On/Off	9 VA	32°F to 122°F (0°C to 50°C)	6.27 in. high x 8.27 in. wide x 2.26 in. deep (159 mm high x 211 mm wide x 57 deep)	WEBs-AX	BACnet MS/TP	Integrated Actuator & Pressure Sensor
PVB0000AS-ILC/U	Spyder ILC Programmable VAV Controller with Integrated Actuator	0 UI, 0 DI, 0 AO, 0 DO	Pulse Width Modulation, Floating, Staged On/Off	9 VA	32°F to 122°F (0°C to 50°C)			BACnet	Integrated Actuator & Pressure Sensor
PVB4022AS/U	Spyder Programmable VAV Controller	4 UI, 0 DI, 2 AO, 2 DO	Pulse Width Modulation, Floating, Staged On/Off	9 VA	32°F to 122°F (0°C to 50°C)		WEBs-AX	BACnet MS/TP	Integrated Actuator & Pressure Sensor
PVB4022AS-ILC/U	Spyder ILC Programmable VAV Controller with Integrated Actuator	4 UI, 0 DI, 2 AO, 2 DO	Pulse Width Modulation, Floating, Staged On/Off	9 VA	32°F to 122°F (0°C to 50°C)			BACnet	Integrated Actuator & Pressure Sensor
PVB4024NS/U	Spyder Programmable VAV Controller	4 UI, 0 DI, 2 AO, 4 DO	Pulse Width Modulation, Floating, Staged On/Off	5 VA	32°F to 122°F (0°C to 50°C)	6.27 in. high x 4.8125 in. wide x 2.26 in. deep (159 mm high x 122 mm wide x 57 mm deep)	WEBs-AX	BACnet MS/TP	Onboard Pressure Sensor
PVB4024NS-ILC/U	Spyder ILC Programmable VAV Controller	4 UI, 0 DI, 2 AO, 4 DO	Pulse Width Modulation, Floating, Staged On/Off	5 VA	32°F to 122°F (0°C to 50°C)			BACnet	Onboard Pressure Sensor

Material Number	Description	I/O Count	Output Type	Power Consumption	Operating Temperature Range	Approximate, Dimensions	Building Management Interface	Network Communications	Includes
PVB6436AS/U	Spyder Programmable VAV Controller	6 UI, 4 DI, 3 AO, 6 DO	Pulse Width Modulation, Floating, Staged On/Off	9 VA	32°F to 122°F (0°C to 50°C)	6.27 in. high x 10.32 in. wide x 2.26 in. deep (159.2 mm high x 262 mm wide x 57.4 mm deep)		BACnet MS/TP	Integrated Actuator & Pressure Sensor
PVB6436AS-ILC/U	Spyder ILC Programmable VAV Controller	6 UI, 4 DI, 3 AO, 6 DO	Pulse Width Modulation, Floating, Staged On/Off	9 VA	32°F to 122°F (0°C to 50°C)			BACnet MS/TP	Integrated Actuator & Pressure Sensor
PVB6436AS-ILC-US/U	Spyder ILC Programmable VAV Controller	6 UI, 4 DI, 3 AO, 6 DO	Pulse Width Modulation, Floating, Staged On/Off	9 VA	32°F to 122°F (0°C to 50°C)			BACnet MS/TP	Integrated Actuator & Pressure Sensor
PVB6438NS/U	Spyder Programmable VAV Controller	6 UI, 4 DI, 3 AO, 8 DO	Pulse Width Modulation, Floating, Staged On/Off	5 VA	32°F to 122°F (0°C to 50°C)	5.76 in. high x 6.85 in. wide x 2.26 in. deep (146.2 mm high x 174 mm wide x 57.4 mm deep)		BACnet MS/TP	Onboard Pressure Sensor
PVB6438NS-ILC/U	Spyder ILC Programmable VAV Controller	6 UI, 4 DI, 3 AO, 8 DO	Pulse Width Modulation, Floating, Staged On/Off	5 VA	32°F to 122°F (0°C to 50°C)			BACnet MS/TP	Onboard Pressure Sensor
PVB6438NS-ILC-US/U	Spyder ILC Programmable VAV Controller	6 UI, 4 DI, 3 AO, 8 DO	Pulse Width Modulation, Floating, Staged On/Off	5 VA	32°F to 122°F (0°C to 50°C)			BACnet MS/TP	Onboard Pressure Sensor
PVL0000AS/U	Spyder Programmable VAV Controller	0 UI, 0 DI, 0 AO, 0 DO	Pulse Width Modulation, Floating, Staged On/Off	9 VA	32°F to 122°F (0°C to 50°C)	6.27 in. high x 8.27 in. wide x 2.26 in. deep (159 mm high x 211 mm wide x 57 deep)		LonWorks	Integrated Actuator & Pressure Sensor
PVL0000AS-ILC/U	Spyder ILC Programmable VAV Controller	0 UI, 0 DI, 0 AO, 0 DO	Pulse Width Modulation, Floating, Staged On/Off	9 VA	32°F to 122°F (0°C to 50°C)			LonWorks	Integrated Actuator & Pressure Sensor
PVL0000AS-ILC-US/U	Spyder ILC Programmable VAV Controller	0 UI, 0 DI, 0 AO, 0 DO	Pulse Width Modulation, Floating, Staged On/Off	9 VA	32°F to 122°F (0°C to 50°C)			LonWorks	Integrated Actuator & Pressure Sensor
PVL4022AS/U	Spyder Programmable VAV Controller	4 UI, 0 DI, 2 AO, 2 DO	Pulse Width Modulation, Floating, Staged On/Off	9 VA	32°F to 122°F (0°C to 50°C)			LonWorks	Integrated Actuator & Pressure Sensor
PVL4022AS-ILC/U	Spyder ILC Programmable VAV Controller	4 UI, 0 DI, 2 AO, 2 DO	Pulse Width Modulation, Floating, Staged On/Off	9 VA	32°F to 122°F (0°C to 50°C)			LonWorks	Integrated Actuator & Pressure Sensor
PVL4022AS-ILC-US/U	Spyder ILC Programmable VAV Controller	4 UI, 0 DI, 2 AO, 2 DO	Pulse Width Modulation, Floating, Staged On/Off	9 VA	32°F to 122°F (0°C to 50°C)			LonWorks	Integrated Actuator & Pressure Sensor
PVL4024NS/U	Spyder Programmable VAV Controller	4 UI, 0 DI, 2 AO, 4 DO	Pulse Width Modulation, Floating, Staged On/Off	5 VA	32°F to 122°F (0°C to 50°C)	6.27 in. high x 4.8125 in. wide x 2.26 in. deep (159 mm high x 122 mm wide x 57 mm deep)		LonWorks	Onboard Pressure Sensor
PVL4024NS-ILC/U	Spyder ILC Programmable VAV Controller	4 UI, 0 DI, 2 AO, 4 DO	Pulse Width Modulation, Floating, Staged On/Off	5 VA	32°F to 122°F (0°C to 50°C)			LonWorks	Onboard Pressure Sensor
PVL4024NS-ILC-US/U	Spyder ILC Programmable VAV Controller	4 UI, 0 DI, 2 AO, 4 DO	Pulse Width Modulation, Floating, Staged On/Off	5 VA	32°F to 122°F (0°C to 50°C)			LonWorks	Onboard Pressure Sensor
PVL6436AS/U	Spyder Programmable VAV Controller	6 UI, 4 DI, 3 AO, 6 DO	Pulse Width Modulation, Floating, Staged On/Off	9 VA	32°F to 122°F (0°C to 50°C)	6.27 in. high x 10.32 in. wide x 2.26 in. deep (159.2 mm high x 262 mm wide x 57.4 mm deep)		LonWorks	Integrated Actuator & Pressure Sensor
PVL6436AS-ILC/U	Spyder ILC Programmable VAV Controller	6 UI, 4 DI, 3 AO, 6 DO	Pulse Width Modulation, Floating, Staged On/Off	9 VA	32°F to 122°F (0°C to 50°C)			LonWorks	Integrated Actuator & Pressure Sensor
PVL6436AS-ILC-US/U	Spyder ILC Programmable VAV Controller	6 UI, 4 DI, 3 AO, 6 DO	Pulse Width Modulation, Floating, Staged On/Off	9 VA	32°F to 122°F (0°C to 50°C)			LonWorks	Integrated Actuator & Pressure Sensor

Spyder Controllers

Material Number	Description	I/O Count	Output Type	Power Consumption	Operating Temperature Range	Approximate, Dimensions	Building Management Interface	Network Communications	Includes
PVL6438NS/U	Spyder Programmable VAV Controller	6 UI, 4 DI, 3 AO, 8 DO	Pulse Width Modulation, Floating, Staged On/Off	5 VA	32°F to 122°F (0°C to 50°C)	5.76 in. high x 6.85 in. wide x 2.26 in. deep (146.2 mm high x 174 mm wide x 57.4 mm deep)		LonWorks	Onboard Pressure Sensor
PVL6438NS-ILC/U	Spyder ILC Programmable VAV Controller	6 UI, 4 DI, 3 AO, 8 DO	Pulse Width Modulation, Floating, Staged On/Off	5 VA	32°F to 122°F (0°C to 50°C)			LonWorks	Onboard Pressure Sensor
PVL6438NS-ILC-US/U	Spyder ILC Programmable VAV Controller	6 UI, 4 DI, 3 AO, 8 DO	Pulse Width Modulation, Floating, Staged On/Off	5 VA	32°F to 122°F (0°C to 50°C)			LonWorks	Onboard Pressure Sensor

Spyder Accessories

Accessories for Spyder Controllers.

Approximate, Dimensions: 7.20 in. high x 7.48 in. wide x 2.30 in. deep (183 mm high x 190 mm wide x 58 mm deep)

Material Number	Description	Used With
WB10707/U	Spyder Micro Wiring Box (must be ordered in multiple of 10)	Spyder Micro

Stryker Configurable Controllers

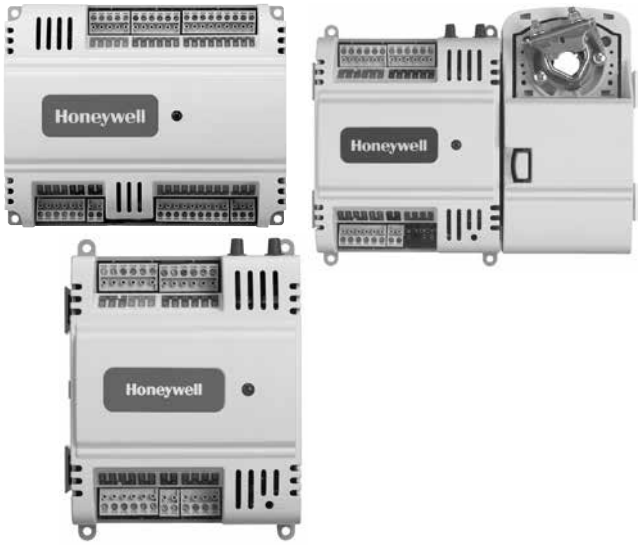

Stryker is the controller you want when you need to do an install and want the job done quickly. It's perfect for jobs with a large number of variable air volume (VAV) boxes or constant volume air handling units (CVAHU) where programming time can be significant. With Stryker you'll have a robust controller that can be easily installed. Its off-the-shelf configurations will be functioning in seconds.

- Uses the Echelon® LONWORKS® network protocol.
- Free Topology Transceiver (FTT) high-speed 78 kilobit communications network.
- Capable of stand-alone operation, but can also use LONWORKS® Bus network communications.
- Sylk™ bus for use with Sylk-enabled sensors.
- 120 controllers per Q7751A, B Router when configured as a repeater.
- Field configurable for control, input, and output functions using the NIAGARA FRAMEWORK® software.
- Built-in Zone Control functions include a remote wall module interface and a scheduler.
- Pressure-independent or pressure-dependent single Variable Air Volume (VAV) control.
- Microbridge air flow sensor with dual integral restrictor design.
- Easy user access to air flow sensor inputs.
- Actuator (CVL4022AS-VAV1 only) mounts directly onto VAV box damper shaft and has up to 44 lb-in. (5 Nm) torque, 90-degree stroke, and 90 second timing at 60 Hz.
- All wiring connections are made to removable terminal blocks to simplify controller installation and replacement.
- Both controller housing and actuator are UL plenum rated.

Application Size: Small to Large
Comments: Onboard 20 VDC power supply
Compatible With: WEBs AX
Frequency: 50 Hz; 60 Hz
Voltage: 24 Vac with a valid range of 20 to 30 Vac
Shipping and Storage Temperature Range: -40°F to 150°F (-40°C to 65.5°C)
Approvals, Underwriters Laboratories Inc.: UL 916

Approvals, CSA: Certified
Approvals, FCC: FCC Part 15, Subpart B, Class B
Approvals, CE: Approved
Operating Humidity Range (% RH): 5 to 95% RH, non-condensing
Building Management Interface: WEBs AX
Network Communications: LonWorks
Commissioning Software: WEBs AX

Material Number	Description	Application	I/O Count	Output Type	Power Consumption	Setpoint Temperature Range	Operating Temperature Range	Approximate, Dimensions	Includes
CUL6438SR-CV1/U	Stryker Lon Configurable CVAHU Controller, 6 Universal/ 4 Digital Inputs, 3 Analog/8 Relay Outputs	CVAHU	6 Universal Inputs, 4 Digital Inputs, 3 Analog Outputs, 8 Relay Outputs		5 VA	Configurable	-40°F to 150°F (-40°C to 65.5°C)	5.45 in. high x 6.85 in. wide x 2.26 in. deep (138 mm high x 174 mm wide x 57 mm deep)	
CVL4022AS-VAV1/U	Spyder Programmable VAV Controller	VAV	4 Universal Inputs, 0 Digital Inputs, 2 Analog Outputs, 2 Digital Outputs	Pulse Width Modulation, Floating, Staged On/Off	9 VA	Programmable	32°F to 122°F (0°C to 50°C)	6.27 in. high x 8.27 in. wide x 2.26 in. deep (159 mm high x 211 mm wide x 57 deep)	Integrated Actuator & Pressure Sensor
CVL4024NS-VAV1/U	Spyder Programmable VAV Controller	VAV	4 Universal Inputs, 0 Digital Inputs, 2 Analog Outputs, 4 Digital Outputs	Pulse Width Modulation, Floating, Staged On/Off	5 VA	Programmable	32°F to 122°F (0°C to 50°C)	6.27 in. high x 4.8125 in. wide x 2.26 in. deep (159 mm high x 122 mm wide x 57 mm deep)	Onboard Pressure Sensor

Sylk IO Modules

The Sylk IO devices are part of the Spyder family. The three IO devices are designed to seamlessly integrate with Spyder with relay controllers using only Sylk™ for communication. These devices expand the footprint of a single Spyder, increasing the controller's ability to be applied in applications that require a large amount of physical I/O. The Sylk IO devices are programmable using existing Spyder wire sheets through the Niagara Framework® software. Since the Sylk IO devices are extensions of the Spyder LON and Spyder BACnet controllers, the same Spyder feature will be leveraged in the WebPro workbench tool and the WEBs-AX JACE controller.

The Sylk IO devices are intended for use in HVAC applications that require a programmable controller where the IO count is more than the full sized Spyder point count. All devices provide flexible, universal inputs for external sensors while SIO6042 and SIO4022 provide a combination of analog and digital outputs.

- Expands a single Spyder controller's IO count by 8-12 IO per device.
- Up to three devices for LON Spyders and up to two devices for BACnet Spyders can be applied.
- Communicates through Sylk™ bus freeing up IO for more applications.
- Program logic resides in a single controller and uses the existing Spyder wire sheet.
- Programming is built directly into the Spyder tool.
- Installation can be done locally or remotely.
- Field configurable and programmable for control, input, and output functions using the Niagara Framework® software.
- All wiring connections are made to removable terminal blocks to simplify device installation and replacement.
- The device housing is UL plenum rated.

Application: Accessory
Application Size: Small to Large
Compatible With: WEBs AX
Setpoint Temperature Range: Programmable
Operating Temperature Range: -40°F to 150°F (-40°C to 65.5°C)
Approximate, Dimensions: 6.27 in. high x 4.75 in. wide x 2.26 in. deep (159 mm high x 120.6 mm wide x 57.4 mm deep)
Shipping and Storage Temperature Range: -40°F to 150°F (-40°C to 65.5°C)

Approvals, Underwriters Laboratories Inc.: UL 916
Approvals, CSA: Certified
Approvals, FCC: FCC Part 15, Subpart B, Class B
Approvals, CE: Approved
Operating Humidity Range (% RH): 5 to 95% RH, non-condensing
Building Management Interface: WEBs AX
Network Communications: Sylk
Commissioning Software: WEBs AX

Material Number	Description	I/O Count	Frequency	Power Consumption	Voltage
SIO12000	Sylk IO Module, 12 Universal/0 Digital Inputs, 0 Analog/0 Digital Outputs	12 Universal/0 Digital Inputs, 0 Analog/0 Digital Outputs	51 Hz; 60 Hz	3 VA	25 Vac with a valid range of 20 to 30 Vac
SIO4022	Sylk IO Module, 4 Universal/0 Digital Inputs, 2 Analog/2 Digital Outputs	4 Universal/0 Digital Inputs, 2 Analog/2 Digital Outputs	53 Hz; 60 Hz	4 VA	27 Vac with a valid range of 20 to 30 Vac
SIO6042	Sylk IO Module, 6 Universal/0 Digital Inputs, 4 Analog/2 Digital Outputs	6 Universal/0 Digital Inputs, 4 Analog/2 Digital Outputs	52 Hz; 60 Hz	5 VA	26 Vac with a valid range of 20 to 30 Vac

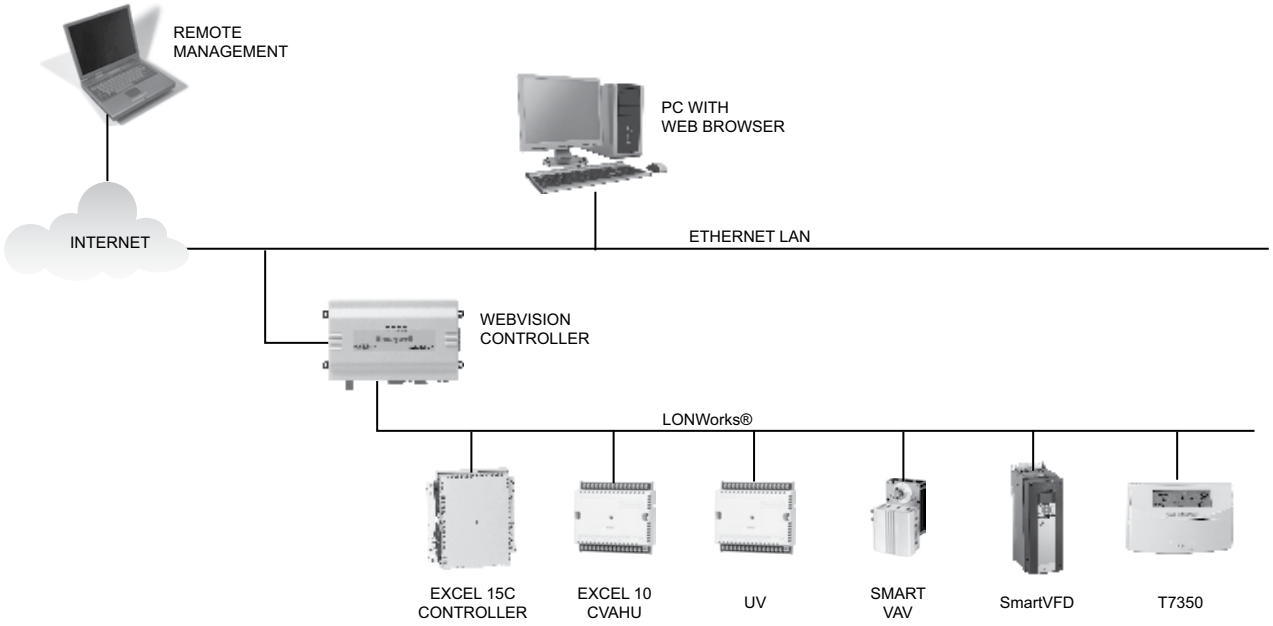
REMOTE
MANAGEMENT
PC WITH
WEB BROWSER
INTERNET
ETHERNET LAN
WEBVISION
CONTROLLER
LONWorks®
EXCEL 15C
CONTROLLER
EXCEL 10
CVAHU
UV
SMART
VAV
SmartVFD
T7350

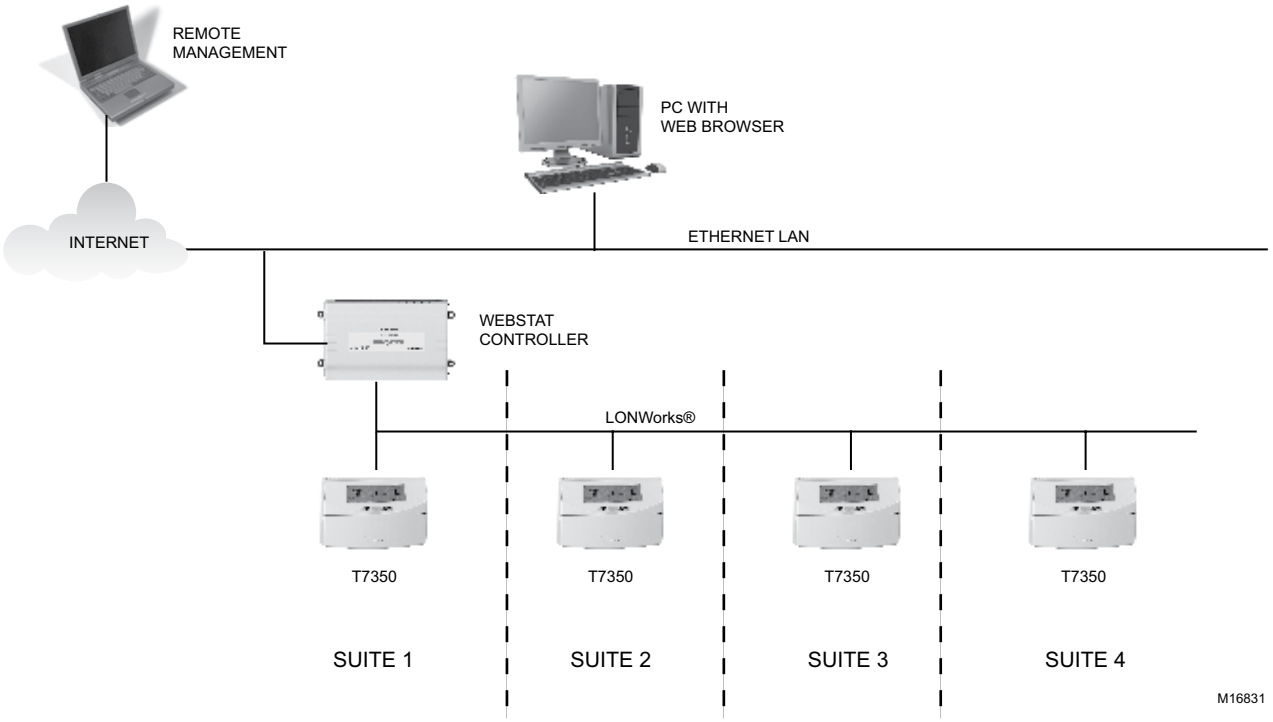
REMOTE
MANAGEMENT
PC WITH
WEB BROWSER
INTERNET
ETHERNET LAN
WEBSTAT
CONTROLLER
LONWorks®
T7350
T7350
T7350
T7350
SUITE 1
SUITE 2
SUITE 3
SUITE 4
M16831

WebStat Controller

Honeywell Integrated Building Automation Solution based on WEBs-AX

- Remote Monitoring
- Remote Programming
- Up to 20 T7350H Thermostats
- Plug-and-Play Setup
- Universal Programming, Commissioning and Graphics Tool
- Alarm Email Notification
- Trending
- Thermostat Self-Discovery
- Wiring Diagram Generation Tool.

Application: Controller
Application Size: Up to 20 T7350H Thermostats with free software upgrade
Operating Temperature Range: 32°F to 122°F (0°C to 50°C)
Approximate, Dimensions: 6 3/8 in. wide x 4 7/64 in. high x 2.5 in. deep (16.2 cm wide x 10.5 cm high x 6.4 cm deep)

Shipping and Storage Temperature Range: 32°F to 140°F (0°C to 60°C)
Approvals, Underwriters Laboratories Inc.: UL 916, cUL listed
Approvals, CSA: CSA C22.2 No. 205-M1983 Signal Equipment
Approvals, FCC: FCC part 15 Class A
Approvals, CE: Approved
Operating Humidity Range (% RH): 5 to 95% RH, non-condensing

Material Number	Description	Network Communications	Commissioning Software	Used With	Compatible With	Includes
W7350A1000/U	WebStat Controller	LonWorks	WebStat	LonWorks bus	T7350H Communicating Thermostats	Lon Card and Power Supply

WebVision Controller

Honeywell WebVision is a low cost building manager with remote monitoring and programming for complete HVAC system management from a single interface. A step-up from WebStat, it extends the scope to support HVAC zone and unitary controllers.

- Web-based monitoring, control, commissioning and programming of up to 120 LON devices
- Easy installation (plug-and-play setup) of embedded software
- Single universal tool for device configuration and customization of graphics
- Alarms, shedules and trends to completely manage building automation system
- Demand Limit Control (DLC) and VAV Balancing
- Allows different user profiles for customized access: contractor, facility manager and tenant

Application: Controller; Building Automation Appliance
Application Size: Up to 120 LON devices, including EXCEL 10s, EXCEL 15C, T7350, and VFDs
Operating Temperature Range: 32°F to 122°F (0°C to 50°C)
Approximate, Dimensions: 6 3/8 in. wide x 4 7/64 in. high x 2.5 in. deep (16.2 cm wide x 10.5 cm high x 6.4 cm deep)

Shipping and Storage Temperature Range: 32°F to 140°F (0°C to 60°C)
Approvals, Underwriters Laboratories Inc.: UL 916, cUL listed
Approvals, CSA: CSA C22.2 No. 205-M1983 Signal Equipment
Approvals, FCC: FCC part 15 Class A
Approvals, CE: Approved
Operating Humidity Range (% RH): 5 to 95% RH, non-condensing

Material Number	Description	Network Communications	Commissioning Software	Used With	Compatible With	Includes
WWS-VL1A1000/U	WebVision Controller	LonWorks	WebVision	LonWorks bus	Excel 10s; Excel 15C; T7350H Communicating Thermostats	Pre-installed LON card and Power Supply

Accesssories for WebStat and WebVision

Honeywell Integrated Building Automation Solution based on WEBs-AX

- Remote Monitoring
- Remote Programming
- Up to 20 T7350H Thermostats
- Plug-and-Play Setup
- Universal Programming, Commissioning and Graphics Tool
- Alarm Email Notification
- Trending
- Thermostat Self-Discovery
- Wiring Diagram Generation Tool.

Application: Accessory-Parts
Compatible With: W7350A1000|WWS-VL1A1000
Building Management Interface: WebStat|WebVision

Material Number	Description	Used With
W-BATTERY/U	REPLACEMENT BATTERY ASSEMBLY FOR WEBSTAT AND WEBVISION	WSS-VLA1000|W7350A1000

Lighting Stryker Configurable Lighting Controllers

Using Honeywell Lighting Stryker to integrate lighting into building automation systems makes smart buildings even brighter. Honeywell Lighting Stryker delivers low voltage control and integration with building automation systems. It's the easy way to add lighting automation, including scheduling, lighting scenes, demand response and much more.

- Pre-programmed and Configurable
- Through WEBs-AX can network multiple zones
- Configured for 0-10V dimming and switching control
- Relay output option allows for full "off" of 0-10V systems
- Zio Smart Scene Selector serves as both configuration tool and scene selector
- Designed for the HVAC Contractor to install, configure and maintain
- Easier to install and takes less time to configure than proprietary lighting control systems
- BMS connectivity via BACnet objects for easy commissioning and integration to Honeywell and other building automation systems

Application: Pre-programmed low voltage lighting control device designed to accept inputs from occupancy/vacancy sensors, switches, photocells and networks to drive line voltage relays and dimming for energy efficient lighting systems.
Application Size: Small to Large
Comments: Onboard 20 VDC power supply
Compatible With: BACnet. WEBs AX and can Standalone
Frequency: 50 Hz; 60 Hz
Power Consumption: 5 VA
Voltage: 24 Vac with a valid range of 20 to 30 Vac
Operating Temperature Range: -40°F to 150°F (-40°C to 65.5°C)

Approximate, Dimensions: 5.45 in. high x 6.85 in. wide x 2.26 in. deep (138.4 mm high x 174 mm wide x 57.4 mm deep)
Shipping and Storage Temperature Range: -40°F to 150°F (-40°C to 65.5°C)
Approvals, Underwriters Laboratories Inc.: UL 916
Approvals, CSA: Certified
Approvals, FCC: FCC Part 15, Subpart B, Class B
Approvals, CE: Approved
Operating Humidity Range (% RH): 5 to 95% RH, non-condensing
Building Management Interface: WEBs AX, TR75 Zio
Network Communications: BACnet

Material Number	Description	Includes	Output Type	Commissioning Software
CLB6438S/U	Lighting Stryker Programmable Lighting Control - BACnet		Pulse Width Modulation, Floating, Staged On/Off	Bult-In - Through TR75
YCLB6438S-1	Lighting Stryker Programmable Lighting Control - BACnet with TR75 Configuation/ Scene Selection Device	TR75 Zio Plus Configuration/Scene Selection Device	Pulse Width Modulation, Floating, Staged On/Off	Bult-In - Through TR75

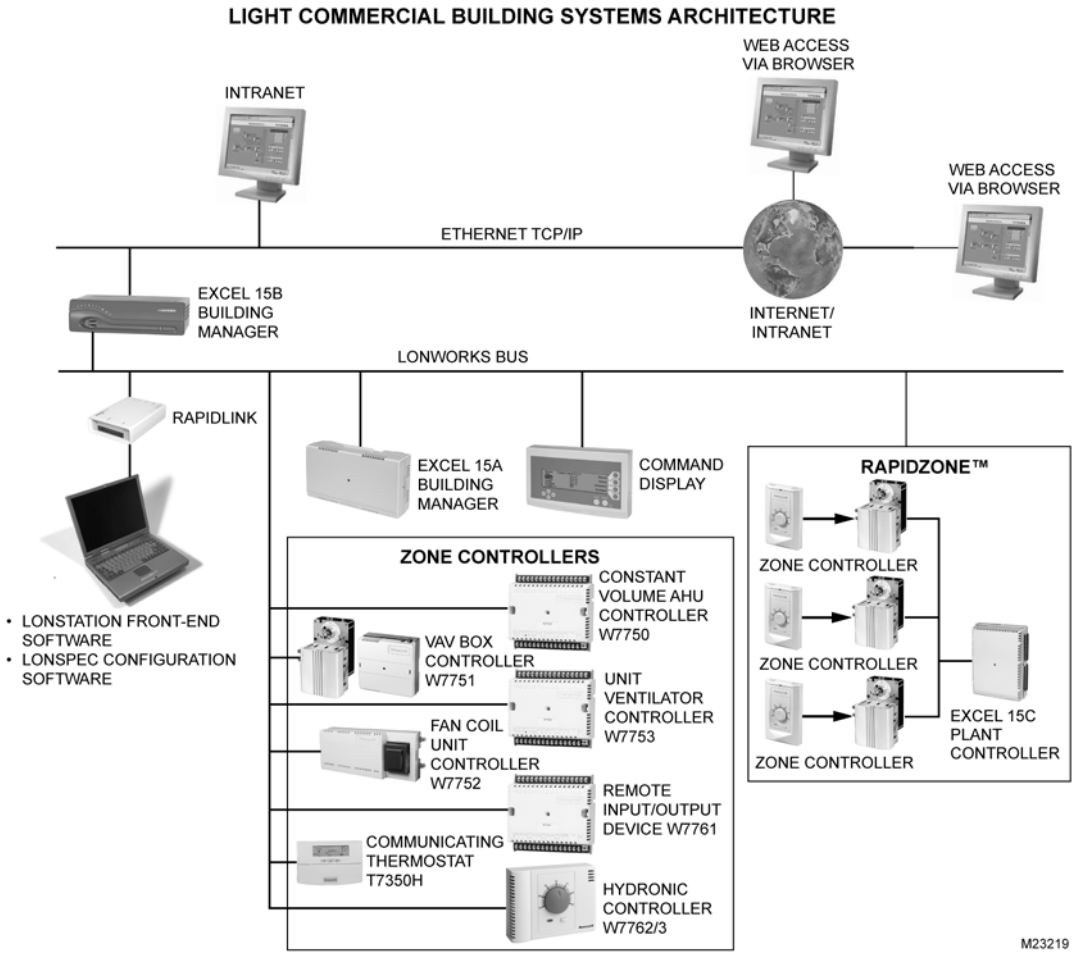
LIGHT COMMERCIAL BUILDING SYSTEMS ARCHITECTURE
WEB ACCESS VIA BROWSER
INTRANET
WEB ACCESS VIA BROWSER
ETHERNET TCP/IP
EXCEL 15B BUILDING MANAGER
INTERNET/ INTRANET
LONWORKS BUS
RAPIDLINK
EXCEL 15A BUILDING MANAGER
COMMAND DISPLAY
RAPIDZONE™
ZONE CONTROLLER
ZONE CONTROLLER
ZONE CONTROLLER
EXCEL 15C PLANT CONTROLLER
• LONSTATION FRONT-END SOFTWARE
• LONSPEC CONFIGURATION SOFTWARE
ZONE CONTROLLERS
CONSTANT VOLUME AHU CONTROLLER W7750
VAV BOX CONTROLLER W7751
UNIT VENTILATOR CONTROLLER W7753
FAN COIL UNIT CONTROLLER W7752
REMOTE INPUT/OUTPUT DEVICE W7761
COMMUNICATING THERMOSTAT T7350H
HYDRONIC CONTROLLER W7762/3
M23219

LonStation Software

LONSTATION. Software is a Windows® based application / PC workstation used for monitoring and managing the Light Commercial Building Solution (LCBS) controllers.

- Easy-to-use drag and drop setup of LonWorks networks and devices.
- Configuration, monitoring and binding of LCBS devices.
- Familiar Windows platform user interface Training available through the Honeywell Authorized Trainer Program.

Application: Software
Building Management Interface: LonStation
Network Communications: LonWorks Bus

Material Number	Description	Commissioning Software	Comments
ZL7762A1026/U	LonStation - Software 5.1.0	LonSpec	Excel LonStation

Q7770 RapidLink

The Excel 10 Q7770A RapidLink device is a complete network interface unit for a FTT LonWorks® Bus network. RapidLink is equipped with an on-board modem that eliminates the requirement for an on-site modem for remote connections.

- High performance communications protocol provides for faster communication of data to your LonWorks network.
- Fixed 115,200 bits per second (bps) serial bit rate with auto-baud detection.
- Uses LonTalk® LonWorks® network protocol.
- 9 to 24 Vac or Vdc power input using removable screw terminals or a 9 Vdc barrel connector.
- Color-coded, removable screw terminals for network and power wiring.

Operating Temperature Range: 32°F to 100°F (0°C to 38°C)
Shipping and Storage Temperature Range: -40°F to +185°F (-40°C to +85°C)
Operating Humidity Range (% RH): 25 to 95% RH at 50°C

Building Management Interface: LonWorks Bus
Network Communications: LonWorks Bus

Material Number	Description	Application	Voltage	Commissioning Software	Comments
Q7770A1001/U	RapidLink Dial Up Network Adapter	Interface- Small to Large Applications	9 to 24 Vac or Vdc		Transceiver Type: Transformer isolated, differential Manchester transceiver Display Two service LEDs indicate service request information for each segment; Status LED indicates when network traffic is occurring
50000591-001/U	RapidLink Accessory Kit (U.S.)	Accessory or Replacement Part		LCBS	

W7760A Excel 15 Controller

The Excel 15 W7760A Building Manager is a LonMark® compliant device, used to monitor and control HVAC equipment and other miscellaneous loads in a distributed network. The optional lithium battery allows up to four years of continuous power.

- Programmable control of mechanical equipment and auxiliary points.
- Configurable inputs/outputs are expandable with up to three Excel 10 Remote Input/Output (RIO) devices.
- 6 General Purpose Configurable (PID) Control Loops.
- 6 General Purpose Configurable (Non-Linear) Control Loops.
- 8 Start/Stop Control Loops (max of 6 events per day).
- Easy Programming the LonSpecTM Software. Two piece construction for easy installation.
- Easy access to all I/O points for checkout while operations.
- LonTalk® Network communication protocol.
- LonWorks® Free Topology Transceiver (FFT).
- Adaptive Intelligent Recovery.
- Setpoint reset.
- Remote Equipment Monitoring and Control.
- 8 schedules of five different occupancy states (when used with a W7760A Building Manager).
- Demand Limit Control (from a W7760 Building Manager).

Application: Built-up AHU; Packaged RTU; Chiller; Boiler; Heat Pump Systems
Application Size: 20 Nodes
Frequency: 50 Hz; 60 Hz
Power Consumption: 20 VA (with no digital outputs), 100 VA (with digital outputs)
Operating Temperature Range: 32°F to 113°F (0°C to 45°C)
Approximate, Dimensions: 6 5/32 in. high x 10 19/32 in. wide x 3 7/32 in. deep (156 mm high x 259 mm wide x 82 mm deep)

Shipping and Storage Temperature Range: -4°F to +158°F (-20°C to +50°C)
Approvals, Underwriters Laboratories Inc.: UL and cUL listed UL916 as a Class 2 device
Approvals, FCC: Listed Part 15 Subpart J. Class A
Building Management Interface: LonStation
Network Communications: LonWorks Bus
Commissioning Software: LonSpec; RapidZone

Material Number	Description	I/O Count	Output Type	Used With	Comments
W7760A2011/U	Excel 15 building manager	4 Digital Inputs, 8 Analog Inputs, 8 Digital Outputs, 2 Analog Outputs	Analog/Modulating, Staged On/Off, Floating, Pulse Width Modulation	LonWorks bus; S7760A Command Display	Can also be used to provide timekeeping abilities to the Excel 15C

W7760C Excel 15 Controller

The Excel 15 W7760C Plant Controller, monitors and controls HVAC equipment and other miscellaneous loads in a distributed network. The W7760C Plant Controller communicates via the 78 kilobaud LonWorks Network, using a free topology transceiver (FTT).

- Programmable control of mechanical equipment and auxilary points.
- Configurable inputs/outputs are expandable with up to three Excel 10 Remote Input/Ouput (RIO) devices.
- Eight digital inputs, eight analog inputs.
- Eight optically isolated digital outputs, six 0-20 mA analog outputs.
- Easy programming with LonSpec software.
- Two-piece contruction.
- Easy access to all I/O point for check-out while operational.
- LonTalk Network communication protocol.
- LonWorks Free Topology Transceiver (FTT).

Application: Built-up AHU; Packaged RTU; Chiller; Boiler; Heat Pump Systems
Frequency: 50 Hz; 60 Hz
Power Consumption: 18 VA max, with no digital outputs
Voltage: 24 Vac
Operating Temperature Range: -40°F to +150°F (-40°C to +65°C)
Approximate, Dimensions: 7 1/2 in. high x 5 1/4 in. wide x 1 15/16 in. deep (191 mm high x 133 mm wide x 49 mm deep)

Shipping and Storage Temperature Range: -4°F to +122°F (-20°C to +50°C)
Approvals, Underwriters Laboratories Inc.: UL/cUL Listed: UL916 (E14480)
Approvals, FCC: Listed: Part 15 Subpart J, Class A: European Community Mark: Conforms to European Consortium standards
Building Management Interface: LonStation
Network Communications: LonWorks Bus

Material Number	Description	Commissioning Software	I/O Count	Output Type	Used With	Comments
W7760C2017/U	Excel 15C Plant Manager	LonSpec; RapidZone	8 Analog Inputs, 6 Analog Outputs, 8 Digital Inputs, 8 Digital Outputs	Analog/Modulating, Pulse Width Modulation, Staged On/Off	S7760A Command Display; LonWorks bus	Designed to be used with the Light Commercial building solution. Requires a W7760A be connected to the LonWorks bus in order to have scheduling information

W7750 Constant Volume Air Handling Unit

- Designed for both staged heating/cooling control and modulating heating/cooling control.
- Uses either Series 60 Floating Control or PWM (W7750B only) providing modulating control for heating/cooling equipment.
- Supports two types of economizer control: modulating control and enable/disable control.
- Provides Proportional Integral Derivative (PID) temperature control.
- Uses an adaptive algorithm (patent pending) that continuously adjusts the discharge air setpoint as needed (W7750B only).
- Motion sensor interface for enhanced energy savings.
- Window sensor input for additional energy savings.

The W7750A, B, C are LonMark® compliant Constant Volume Air Handling Unit Controllers used to control single zone and heat pump air handlers.

- High side triac switching (B and C only).
- Freezestat protection for HVAC equipment (B and C only).
- Analog outputs (C only).
- Factory configured via EEPROM with critical user parameter default values.
- Uses LonTalk® network (E-Bus) communications protocol.
- High-speed 78 kilobit communications network.
- Conforms with Echelon® LonMark® HVAC Interoperability standard for Roof Top Unit controllers (profile number 8030).
- Free Topology Transceiver (FTT) network technology is insensitive to polarity, simplifying installation.
- Capable of stand-alone operation and has enhanced features available when using the E-Bus network communications.

Used With: See Application Selection Guide (63-7046)
Output Type: Staged On/Off, Floating, Pulse Width Modulation
Frequency: 50 Hz; 60 Hz
Voltage: 24 Vac
Setpoint Temperature Range: 45°F to 99°F (7°C to 37°C)
Operating Temperature Range: -40°F to +150°F (-40°C to +66°C)
Approximate, Dimensions: 5 5/8 in. high x 6 in. wide x 2 1/8 in. deep (143 mm high x 152 mm wide x 54 mm deep)
Shipping and Storage Temperature Range: -40°F to +150°F (-40°C to +65°C)
Approvals, Underwriters Laboratories Inc.: UL 916 (E7741) and cUL (E87741)
Operating Humidity Range (% RH): 5 to 95% RH, non-condensing
Network Communications: LonWorks Bus
Commissioning Software: CARE; LonSpec; RapidZone; LNS Plug-in

Material Number	Description	Application	Application Size	I/O Count	Contact Ratings	Power Consumption
W7750A2005/U	Constant Volume AHU Controller	Packaged RTU; Conventional or Heat Pump Systems	2 Heat / 2 Cool	6 Digital Outputs (relay), 3 Analog Inputs, 3 Digital Inputs	1.5 A Run @ 24 Vac; 7.5 A inrush @ 24 Vac	6 VA
W7750B2011/U	Constant Volume AHU Controller	Packaged RTU; Heat Pump Systems	3 Heat / 3 Cool	6 Analog Inputs, 5 Digital Inputs, 8 Digital Outputs (triac)	.5 A @ 24Vac (triac)	12 VA
W7750C2001/U	Constant Volume AHU Controller	Packaged RTU; Heat Pump Systems	3 Heat / 3 Cool	3 Analog Outputs, 6 Analog Inputs, 5 Digital Inputs, 5 Digital Outputs (triac)	.5 A @ 24Vac (triac); 4 to 20 mA (analog)	12 VA

W7751 Variable Air Volume Controllers

W7751B, D & F VAV II Controllers provide pressure independent or dependent airflow control and series and parallel fan control with one and two duct applications. W7751H & J Smart VAV Actuator are VAV Box Controllers with an ML6174B Actuator.

- Uses Echelon® LonWorks® protocol.
- W7751B, D, F use Free Topology Transceiver (FTT) networks and are compliant with VAV device object type number 8010 functional LonMark® profile.
- Energy saving setpoint reset for electrical demand limit control.
- Actuator included with W7751H mounts directly onto VAV box damper shaft and has up to 70 lb-in. torque, 90 degrees stroke, and 90 sec.
- Timing at 60 Hz.
- High speed 78 kilobit communications network.
- Capable of standalone operation, but uses E-Bus network communications.
- Easy user-access to the network communications jack.
- Uses enhanced microbridge-type airflow sensor with dual integral restrictor design.
- Easy user-access to airflow sensor inputs.
- Provides Proportional Integral Derivative (PID) temperature control.
- Designed for pressure independent Variable Air Volume (VAV) control.
- Floating hot water and three-stage electric or modulating hot water heat.
- Provides nonlinear floating algorithm for velocity control loops.
- Individual zone pressurization for supply and exhaust control.
- Factory configured via EEPROM with critical user parameters default values.
- Motion sensor interface for enhanced energy savings.
- Supports Terminal Regulated Air Volume (TRAV) concept.
- Pressurize and depressurize, night purge, and morning warm-up sequences supported.
- Wall module options for sensor, setpoint and bypass.
- Software selectable limits on remote setpoint adjustments.
- Three integrated 8 bit pipelined microprocessors running at 10 MHz.
- 14 bit A/D converter.
- 32K by 8 ROM/PROM, 512 bytes of EEPROM, and 2048 bytes of static RAM.
- W7751D, F mount to a standard 4 x 4 in. and 5 x 5 in. junction box or snapped to 35 by 7.5 mm EN50022 DIN Rail.
- Subbase provides the slotted hole pattern for the R7450 series IRC devices (118 x 87 mm).

Application: VAV Terminal Box
Output Type: Pulse Width Modulation, Floating, Staged On/Off
Compatible With: See Application Selection Guide (63-7045)
Frequency: 50 Hz; 60 Hz
Voltage: 24 Vac with a valid range of 20 to 30 Vac
Setpoint Temperature Range: 45 to 99°F (7 to 37°C)
Operating Temperature Range: 32°F to 125°F (0°C to 52°C)
Shipping and Storage Temperature Range: -40°F to +150°F (-40°C to +65°C)

Approvals, Underwriters Laboratories Inc.: UL 916 (E7741) and cUL (E87741)
Approvals, CE: Approved
Operating Humidity Range (% RH): 5 to 95% RH, non-condensing
Network Communications: LonWorks Bus
Commissioning Software: CARE; LonSpec; RapidZone; LNS Plug-in

Material Number	Description	Power Consumption	Approvals, CSA	Approvals, FCC	Comments
W7751B2010/U	Excel 10 VAV II Controller Printed Wiring Board	10 VA	Listed: File number LR95329-3	Meets FCC part 15 Class A and Class B requirements	Mountable on Snaptrack
W7751D2016/U	Excel 10 VAV II Controller	10 VA	Listed: File number LR95329-3	Meets FCC part 15 Class A and Class B requirements	Internally wired subbase, UUKL approval for use on fire systems
W7751F2011/U	Excel 10 VAV II Controller	10 VA	Listed: File number LR95329-3	Meets FCC part 15 Class A and Class B requirements	Externally wired subbase, UUKL approval for use on fire systems
W7751H2025/U	Excel 10 Smart VAV Actuator includes ML6161 Actuator mounted directly on the VAV box	6 VA		Meets FCC part 15 Class B requirements	UUKL approval for use on fire systems
W7751J2004/U	Excel 10 Smart VAV Actuator includes ML6161 Actuator mounted directly on the VAV box	6 VA maximum		Meets FCC part 15 Class B requirements	Does not have pressure sensor, supports pressure dependent only

W7752 Fan Coil Unit Controllers

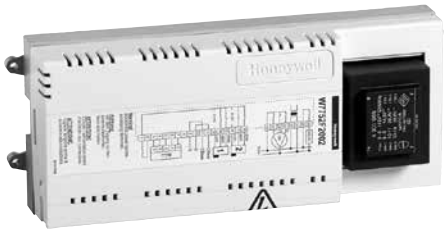

W7752 Fan Coil Unit Controllers provide room temperature control for two & four pipe fan coil units with optional electric heating coils and can control single, two or three speed fans. Is suitable for systems using electric heat and compressors.

- LonMark® Fan Coil Unit HVAC profile #8020.
- Stand-alone operation or on high-speed 78 kilobit Echelon® Bus (E-Bus) network direct connection of thermal actuators, fan switch, electric heat.
- Factory-configured default parameters.
- Wide range of supported valves and actuators.
- Interlocks and time delays to protect equipment.
- Slim design fits into narrow fan coil units.
- Terminations all on one side allow controller to be positioned at back of fan coil unit.
- Integral 115 Vac or 230 Vac transformer.

Application: Fan Coil Unit
Used With: See Application Selection Guide (63-7043)
Frequency: 50 Hz; 60 Hz
Power Consumption: 30 VA maximum
Setpoint Temperature Range: 32°F to 104°F (0°C to 40°C)
Operating Temperature Range: 32°F to 122°F (0°C to 50°C)
Approximate, Dimensions: 4 1/8 in. high x 10 1/8 in. wide x 2 1/2 in. deep (101 mm high x 257 mm wide x 60 mm deep)

Shipping and Storage Temperature Range: -40°F to +150°F (-40°C to +70°C)
Approvals, FCC: Meets FCC part 15 class B requirements
Approvals, CE: CE mark; EN50081-1; EN50082-1
Operating Humidity Range (% RH): 5 to 95% RH, non-condensing
Network Communications: LonWorks Bus
Commissioning Software: CARE; LonSpec; RapidZone; LNS Plug-in

Material Number	Description	Application Size	I/O Count	Output Type	Voltage	Includes
W7752D2007	Fan Coil Unit Controllers	2-pipe; 4-pipe; 3 Heat / 3 Cool	3 Analog Inputs, 1 Digital Input, 1 Digital Output (3 speed fan control), 2 Analog Outputs (H/C triac), 1 Digital Output	Staged On/Off, Floating, Pulse Width Modulation	230 Vac (+10%, -15%) with electric heat relay	250 Vac 10A electric reheat relay and 3 fan speed relays
W7752G2000	Fan Coil Unit Controllers	3 Heat / 3 Cool; 2-pipe; 4-pipe	3 Analog Inputs, 1 Digital Input, 1 Digital Output (3 speed fan control), 2 Analog Outputs (H/C triac), 1 Digital Output	Staged On/Off, Floating, Pulse Width Modulation	115 Vac (+10%, -15%) without electric heat relay	3 fan speed relays

W7753 Unit Vent Controllers

W7753A is a direct digital controller for unit ventilators with staged, floating, or pulse width modulation output using pre-programmed heating, cooling, economizer, and ASHRAE cycles I, II, or III algorithms.

- Uses standard Echelon® LonMark Unit Ventilator functional profile for openness and interoperability with LonMark devices.
- Applications include unit ventilators with up to two stages heat/cool; floating heat/cool/economizer, pulse width modulating (PWM) heat/cool/economizer; ASHRAE Cycles I, II, III.
- Two unused digital outputs can be used as free points controlled by the network for lighting, exhaust fan.
- Can be used for indoor air quality control using an external sensor/control and economizer minimum position reset.
- Provides optional energy-saving setpoints for heating/cooling in unoccupied/occupied and standby modes.
- Optional control sequence shutdown via window/door open digital input.
- On-board network jacks for quick commissioning and troubleshooting using the E-Vision configuration tool.
- On-board status LED.
- Free topology transceiver (FTT) for flexible installation.
- UL94-5V flame-retardant construction.

Application: Unit Ventilator
Application Size: 2 Heat / 2 Cool
Frequency: 50 Hz; 60 Hz
Power Consumption: 6 VA
Setpoint Temperature Range: 55°F to 85°F (13°C to 29°C)
Approximate, Dimensions: 5 5/8 in. high x 6 in. wide x 2 1/8 in. deep (143 mm high x 152 mm wide x 54 mm deep)

Shipping and Storage Temperature Range: -40°F to +150°F (-40°C to +65°C)
Approvals, Underwriters Laboratories Inc.: UL 916
Approvals, FCC: FCC part 15 Class B requirements
Network Communications: LonWorks Bus
Commissioning Software: CARE; LonSpec; RapidZone; LNS Plug-in

Material Number	Description	I/O Count	Output Type	Used With	Comments
W7753A2002/U	Unit Ventilator Controller	8 Digital Outputs (triac), 2 Analog Inputs (resistive), 2 Analog Inputs (voltage), 4 Digital Inputs	Staged On/Off, Floating, Pulse Width Modulation	See Application Selection Guide (63-7044)	One T7770 wall module input

W7761 Remote Input/Output Device

The W7761 extends the distribution of input and output devices across an Echelon network.

- Each input/output is individually controlled from the Zone Manager.
- Uses Echelon LonTalk® communication protocol.
- Free topology transceiver (FTT) for flexible installation.
- On-board network jacks.
- On-board status LED.
- Flame retardant construction (UL94-V5 rated).

Application: Remote I/O
Application Size: 2 Heat / 2 Cool
Frequency: 50 Hz; 60 Hz
Power Consumption: 6 VA maximum
Voltage: 24 Vac with a valid range of 20 to 30 Vac
Operating Temperature Range: -40°F to +150°F (-40°C to +65°C)
Approximate, Dimensions: 5 5/8 in. high x 6 in. wide x 2 1/8 in. deep (143 mm high x 152 mm wide x 54 mm deep)
Shipping and Storage Temperature Range: -40°F to +150°F (-40°C to +65°C)
Approvals, Underwriters Laboratories Inc.: Component Recognized: File No. SA481
Approvals, CSA: Listed: File No. LR95329-3
Operating Humidity Range (% RH): 5 to 95% RH, non-condensing
Network Communications: LonWorks Bus

Material Number	Description	Commissioning Software	I/O Count	Output Type	Comments
W7761A2010/U	Excel 10 Remote IOD	LNS Plug-in; CARE; LonSpec; RapidZone	2 Analog Inputs (voltage), 4 Analog Inputs (resistive), 4 Digital Inputs, 8 Digital Outputs (triac)	Staged On/Off, Floating, Pulse Width Modulation	UUKL approval for use on fire systems

W7762; W7763 Hydronic Controller

W7762 Hydronic controllers cover a wide range of control applications including radiators, induction units, fan coil units with manual switching, and simple VAV. They are suitable for unit/wall mounting as stand-alone or part of a LonWorks bus network.

- High efficiency, low cost Heat/Cool valve application solution.
- Model with integrated or remote wall module LonWorks Open protocol: flexibility now and for the future.
- LonMark profile #8020.
- Direct connection of thermal actuators.
- Wide range of supported valves and actuators.

Application: Hydronic Controller
Application Size: 2-pipe; 4-pipe; 3 Heat / 3 Cool
Output Type: Floating, Pulse Width Modulation, Staged On/Off, Multi-stage Electric
Frequency: 50 Hz; 60 Hz
Power Consumption: 0.5 VA maximum (no load)
Voltage: 24 Vac ± 20%
Setpoint Temperature Range: 32°F to 158°F (0°C to 70°C)
Operating Temperature Range: 32°F to 122°F (0°C to 50°C)
Approximate, Dimensions: 3 5/32 in. high x 4 11/32 in. wide x 1 21/32 in. deep (80 mm high x 110 mm wide x 42 mm deep)
Shipping and Storage Temperature Range: -4°F to +158°F (-20°C to +70°C)
Approvals, Underwriters Laboratories Inc.: Component Recognized: File No. SA481
Approvals, CSA: Listed: File No. LR95329-3
Operating Humidity Range (% RH): 5 to 95% RH, non-condensing
Network Communications: LonWorks Bus

Material Number	Description	Commissioning Software	Comments	Includes
W7762B1027	Excel 10 Hydronic Controller	CARE; LonSpec; RapidZone; LNS Plug-in	2 inputs and 2 control outputs	
W7763C1016	Excel 10 Hydronic Controller	CARE; LonSpec; RapidZone; LNS Plug-in	3 Inputs, 2 Control Outputs	An integral setpoint knob, sensor, bypass button, and LED
W7763C1024	Excel 10 Hydronic Controller	CARE; LNS Plug-in	Relative Setpoint Adjustment	An integral setpoint knob, sensor, bypass button, and LED
W7763C1032	Excel 10 Hydronic Controller	CARE; LNS Plug-in	Relative Setpoint Adjustment	An integral setpoint knob, sensor, bypass button, and LED

Y7751- W7751F VAV Unit Controller and ML6161B Actuator

W7751F2003 VAV II Controllers provide pressure independent or dependent airflow control and series and parallel fan control. Extra outputs control VAV box reheat coils. ML6161B2024 controls dampers in VAV terminal units and mounting on ball valves.

- Uses Echelon LonWorks Protocol.
- High Speed 78 kilobit communications network.
- Easy user-access to the network communications jack.
- Easy user-access to the airflow sensor inputs.
- Provides Proportional Integral Derivative (PID) temperature control.
- Designed for pressure independent Variable Air Volume (VAV) control.
- Floating hot water and three-stage electric or modulating hot water heat.
- Provides nonlinear floating algorithm for velocity control loops.
- Factory configured via EEPROM with critical user parameters default values.
- ML6161B2024 is a Direct Couple, Gereral Purpose, Non-Spring Return Actuator.
- Rated at 35 lb-in. torque with a 90 degree stroke.

Building Management Interface: EBI; SymmetrE; ACSELON

Material Number	Application	Description	Network Communications	Commissioning Software	Includes
Y7751F2001/U	VAV Controller with FFT base with enclosure and outward facing terminal strips	Package containing a W7751F VAV Controller and a ML6161 Actuator	LonWorks Bus	CARE; LonSpec; RapidZone; LNS Plug-in	One W7751F 2003 and one ML6161B 2024

W7760B Excel 15 Controller

The Excel 15 W7760B Building Manager is a Light Commercial Building Solution (LCBS) operator interface (network server) and LONWORKS® Bus supervisory device, used to connect the user to the Internet/LAN/WAN and provide multi-user access to web pages.

- Internet Network appliance with hard drive.
- Supports up to 120 Excel 10 and Excel 15 W7760C controllers.
- Self-discovery of devices (nodes) on the LONWORKS® network.
- Automatically creates a Device Status List (DSL).
- Automatically creates display pages for each supported Excel 10 and Excel 15 W7760C controller.
- Automatically configures Trends Log for supported Excel 10 and Excel 15 W7760C controller.
- Up to 100 user configured Trend Logs.
- Scheduling of Excel 10 devices and Excel 15 W7760C objects.
- Reports and logs alarm data.
- E-mails reports of alarm data.
- View Excel 10 and Excel 15 W7760C data, modify setpoints and command Occupied bypass.
- Real Time Clock (RTC) for time stamping with time synchronization.
- Multi-user access.

Application: Built-up AHU; Packaged RTU; Chiller; Boiler; Heat Pump Systems
Application Size: 120 nodes
Used With: LonWorks bus; S7760A Command Display
Output Type: Staged On/Off, Graphical Interface, Floating, Pulse Width Modulation, Analog/Modulating
Frequency: 50 Hz; 60 Hz
Power Consumption: 20 VA
Operating Temperature Range: 41°F to 95°F (5°C to 35°C)
Approximate, Dimensions: 6 5/32 in. high x 10 19/32 in. wide x 3 7/32 in. deep (156 mm high x 259 mm wide x 82 mm deep)
Shipping and Storage Temperature Range: -4°F to +149°F (-20°C to +65°C)
Approvals, Underwriters Laboratories Inc.: UL and cUL listed UL916 as a Class 2 device
Approvals, FCC: Listed Part 15 Subpart J. Class A
Operating Humidity Range (% RH): 10% to 85% non-condensing
System Requirements: Internet Explorer 5.5 or higher
Building Management Interface: Excel 15B
Network Communications: LonWorks Bus

Material Number	Description	Comments
W7760B2001/C	Excel 15 building manager	Can also be used to provide timekeeping abilities to the Excel 15C
W7760B2001/U	Excel 15 building manager	Can also be used to provide timekeeping abilities to the Excel 15C

T7067 Thermostat and Transmitter

T7067A Thermostat and T7067B Transmitter control space temperature when used with W973 Logic Panel.

- Separate heat and cool adjustable setpoint levers provide adjustable deadband from 3°F to 30°F (2°C to 17°C).
- Separate 1-16 Vdc voltage ramps provide independent heating and cooling signals to W973 Single Zone Logic Panel.
- Two light-emitting diodes (LEDs) under T7067 cover for system checkout.
- C7046A Discharge Air Sensor provides temperature anticipation.
- One T7067 can control up to 6 W973 panels in parallel.
- Mount on standard 2 x 4 in. vertical outlet box or on a non-conductive flat surface.
- All models include wiring plate and locking cover.

Application: Module
Application Size: Depends on Logic Panel (W973)
Output Type: Voltage Ramp
Voltage: 20 Vdc from W973 panel
Setpoint Temperature Range: 55°F to 85°F (13°C to 29°C)
Approximate, Dimensions: 4 5/8 in. high x 2 13/16 in. wide x 1 1/4 in. deep (118 mm high x 71 mm wide x 32 mm deep)

Shipping and Storage Temperature Range: -40°F to +150°F (-40°C to +65°C)
Approvals, DOD Guidelines: Meets
Approvals, ASHRAE Guidelines: Meets ASHRAE 90-75

Accessories:
S963D1001/U – 2 Potentiometers that simulate the ramp signals of a T7067 Thermostat

Material Number	Control System	Compatible With	Description	Comments
T7067A1008/U	W973 single zone	Q667 subbase, W973 Logic Panel	Solid State Thermostat designed to be used with the W973 logic panel to control the operation of single zone packaged air conditioning equipment.	Integral temperature sensor without thermometer; Number of stages of heating and cooling depends on the chosen Logic Panel
T7067B1006/U	W973 single zone	Q667 subbase, W973 Logic Panel	Transmitter designed for use with a T7047C1025 or T7022A1010 remote temperature sensor	Must order T7047C, G remote temperature sensor or T7022A remote duct temperature sensor separately

T7080 Electronic Dual Setpoint Thermostat

Used in W7080 control system to provide modulating space temperature control.

- Separate heat and cool adjustable setpoint levers provide adjustable deadband from 3°F to 30°F (2°C to 17°C).
- Single 2 to 22 Vdc voltage ramp provides heating/cooling signal to W7080 Load Analyzer.
- Outputs constant 12 Vdc when sensed temperature is within deadband range.
- Ramp output decreases on call for heat: increases on call for cooling.
- C7100B or C7046B Air Temperature Sensors are used to provide heating/cooling anticipation (one required for each zone thermostat) and can also be optionally used as remote return air temperature sensors with the T7080B transmitter.
- Operates on 24 Vdc supplied by W7080A Load Analyzer.
- Mounts on standard 2 x 4 in. outlet box or on nonconductive flat surface.

Application Size: 3 Heat / 3 Cool
Control System: W7080 control system
Voltage: 24 Vdc
Setpoint Temperature Range: 55°F to 85°F (13°C to 29°C)
Approximate, Dimensions: 4 5/8 in. high x 2 13/16 in. wide x 1 1/4 in. deep (118 mm high x 71 mm wide x 32 mm deep)

Shipping and Storage Temperature Range: -40°F to +150°F (-40°C to +65°C)
Approvals, DOD Guidelines: Meets
Approvals, ASHRAE Guidelines: Meets ASHRAE 90-75

Material Number	Application	Output Type
T7080A1019/U	Packaged RTU; Furnace; Split System	Voltage Ramp
T7080B1017/U	Packaged RTU; Furnace; Heat Pump Systems; Split System	Voltage Ramp

W7080 Load Analyzer

Controls heating, cooling and space demand oriented economizer operation in the Honeywell Electronic Dual Setpoint Multizone control system.

- Controls 3 stages of on/off heating, modulated heating, modulated economizer, 3 stages of on/off cooling and modulated cooling.
- Responds to highest heating and cooling demand signal from up to 12 T7080 Zone Thermostat/Transmitters.
- Analyzer is short-circuit protected source of 24 Vdc power for zone thermostat/transmitter, sensor and W7081A Limit Controller Package.
- Switches all stages off when power is interrupted; switches stages on when power is restored.
- Compressor turn-on time delays must be incorporated for each compressor.
- No adjustment or calibrations required.
- Night setback and cooling shutdown for individual or all zones by addition of time-clock.
- Mounts with 4 No. 8 Screws (not provided) through holes in base.

Application Size: 3 Heat / 3 Cool
Contact Ratings: NO 240 VA inrush @ 24 Vac, 60 VA running @ 24 Vac; NC 75 VA inrush @ 24 Vac, 30 VA running @ 24 Vac
Electrical Connections: 1/4 in. quick-connect male terminals
Frequency: 50 Hz; 60 Hz
Voltage: 24 Vdc
Operating Temperature Range: -40°F to +150°F (-40°C to +65°C)
Approximate, Dimensions: 6 1/4 in. high x 4 1/8 in. wide x 2 5/16 in. deep (159 mm high x 105 mm wide x 59 mm deep)
Shipping and Storage Temperature Range: -40°F to +150°F (-40°C to +65°C)
Approvals, Underwriters Laboratories Inc.: Component Recognized
Approvals, CSA: Component Recognized
Approvals, DOD Guidelines: Meets
Approvals, ASHRAE Guidelines: Meets ASHRAE 90-75

Material Number	Application	Control System	Compatible With	Description	Comments
W7080A1016/U	Packaged RTU; Furnace; Split System	W7080 control system	T7080 Thermostat	Load Analyzer, 3 Heat/ 3 Cool	Load analyzer provides control of On/Off and modulated cooling and modulated economizer functions

W7081 Limit Controller

Used with W7080A Load Analyzer to provide cold deck low limit, hot deck high limit, and economizer/mixed air low limit functions.

- Limits the maximum and minimum temperatures of the hot and cold deck and of the mixed air by supplying modified demand signals to the W7080A Load Analyzer and to the economizer.
- The positive limits stabilize deck temperatures under light load conditions providing greater comfort and reducing energy usage.
- Has jumper selectable setpoints for each of its 3 functions.
- Compact to fit easily in HVAC system control panel.
- Mounts with 4 No. 8 screws (not provided) through holes in base.

Application Size: Small (<20 I/O Points)
Electrical Connections: 1/4 in. quick-connect male terminals
Power Consumption: 0.29 VA maximum
Operating Temperature Range: -40°F to +150°F (-40°C to +65°C)
Approximate, Dimensions: 6 1/4 in. high x 4 1/8 in. wide x 2 5/16 in. deep (159 mm high x 105 mm wide x 59 mm deep)
Shipping and Storage Temperature Range: -40°F to +150°F (-40°C to +65°C)
Approvals, Underwriters Laboratories Inc.: Component Recognized
Approvals, CSA: Component Recognized
Approvals, DOD Guidelines: Meets
Approvals, ASHRAE Guidelines: Meets ASHRAE 90-75

Material Number	Application	Control System	Compatible With	Description
W7081A1015/U	Packaged RTU; Furnace; Heat Pump Systems; Split System	W7080 control system	W7080 Load analyzer	Limit Controller

W7100A, C Discharge Air Temperature Controller

Maintains an average discharge air temperature in variable air volume (VAV) systems, or other systems requiring discharge air control of multistage cooling or heating. Reduces kilowatt demand and consumption by maintaining the minimum amount of heating or cooling capacity required to hold the discharge air setpoint. Utilizes economizer for free cooling when available.

- W7100 Controller maintains an average discharge air temperature in variable air volume (VAV) cooling systems by modulating an economizer and sequencing stages of mechanical cooling
- The W7100 can be applied to electric makeup air and other systems requiring discharge air control of multistage heating or cooling
- Staging capacity of the W7100A, C can be extended six stages using a W7101A Satellite Sequencer
- When power is interrupted, the system cycles to all stages off
- When power is restored, the economizer will first be modulated open (if enthalpy is suitable), then stages of mechanical cooling will be sequenced on
- If enthalpy is not suitable for economizer operation, the first stage of cooling or heating is energized within five minutes
- Reset signal from either space sensor or outdoor air sensor

Electrical Connections: 1/4 in. quick-connect male terminals
Frequency: 50 Hz; 60 Hz
Power Consumption: 12 VA at 24 Vac, 50/60 Hz (max).
Voltage: 20 to 30 Vac
Setpoint Temperature Range: 40°F to 90°F (4°C to 32°C)
Operating Temperature Range: 40°F to 90°F (4°C to 32°C)
Approximate, Dimensions: 8 5/8 in. high x 6 1/2 in. wide x 3 in. deep (219 mm high x 161 mm wide x 76 mm deep)

Shipping and Storage Temperature Range: -40°F to +150°F (-40°C to +65°C)

Accessories:
S963B1037/U – Manual Potentiometer (480 ohm)
S963B1078/U – Manual Potentiometer (500 ohm)
S963B1128/U – Manual Potentiometer (135 ohm)

Material Number	Application	Application Size	Control System	Output Type	Contact Ratings	Description	Comments
W7100A1053/U	Discharge Air	0 Heat / 6 Cool	W7100 family	Staged On/Off	NO 240 VA inrush @ 24 Vac, 60 VA running @ 24 Vac; NC 75 VA inrush @ 24 Vac, 30 VA running @ 24 Vac; NO 750 VA inrush @ 120/240 Vac, 75 VA running @ 120/240 Vac; NC 240 VA inrush @ 40 Vac, 30 VA running @ 24 Vac	20 to 30 Vac Discharge air temperature controller	Additional stages of heating and cooling can be achieved by adding a W7101 Satellite Sequencer
W7100C1018/U	Discharge Air	2 Heat / 4 Cool	W7100 family	Staged On/Off	NO 750 VA inrush @ 120/240 Vac, 75 VA running @ 120/240 Vac; NC 240 VA inrush @ 40 Vac, 30 VA running @ 24 Vac; NO 240 VA inrush @ 24 Vac, 60 VA running @ 24 Vac; NC 75 VA inrush @ 24 Vac, 30 VA running @ 24 Vac	20 to 30 Vac Discharge air temperature controller	Additional stages of heating and cooling can be achieved by adding a W7101 Satellite Sequencer

W7100G Discharge Water Temperature Controller

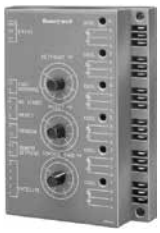

Controls discharge water temperature in reciprocating chiller and cooling tower applications.

- The W7100G maintains average discharge water temperature by staging on and off compressors, unloaders of water tower fans as required.
- Provides up to six stages of cooling.
- Use W7101A for expanding up to 10 cooling stages.
- Advanced proportional plus integral microprocessor control algorithm minimizes droop.
- Soft start to minimize compressor cycling during system start up.
- Adjustable minimum on/off timing and time delay between stages of either 30 or 60 seconds.
- Reset of discharge water temperature based on either outdoor air or space sensor signal.
- Use C7170 Sensor for sensing water temperature.
- LEDs indicate which stages of cooling are energized.
- Use S963B Potentiometer for remote setpoint capability.

Contact Ratings: NO 750 VA inrush @ 120/240 Vac, 75 VA running @ 120/240 Vac; NC 240 VA inrush @ 40 Vac, 30 VA running @ 24 Vac; NO 240 VA inrush @ 24 Vac, 60 VA running @ 24 Vac; NC 75 VA inrush @ 24 Vac, 30 VA running @ 24 Vac
Electrical Connections: 1/4 in. quick-connect male terminals
Frequency: 50 Hz; 60 Hz
Power Consumption: 12 VA at 24 Vac, 50/60 Hz (max).
Voltage: 20 to 30 Vac
Operating Temperature Range: -40°F to +150 F

Approximate, Dimensions: 8 5/8 in. high x 6 1/2 in. wide x 3 in. deep (219 mm high x 161 mm wide x 76 mm deep)
Shipping and Storage Temperature Range: -40°F to +150°F (-40°C to +65°C)

Accessories:
S963B1037/U – Manual Potentiometer (480 ohm)
S963B1078/U – Manual Potentiometer (500 ohm)
S963B1128/U – Manual Potentiometer (135 ohm)

Material Number	Application	Application Size	Control System	Output Type	Compatible With	Description	Comments
W7100G1001/U	Chiller	0 Heat / 6 Cool	W7100 family	Staged On/Off	W7101 Satellite Expansion Module	20 to 30 Vac Discharge Air or Water Temperature Controller	4 additional stages of cooling can be added with W7101A

W9076 Digital Temperature Indicator

W9076 temperature indicators provide continuous LED display of temperature in commercial building uses. Allows user selection of Fahrenheit or Celsius readings in the range of -40°F to 199°F (-40°C to 93°C).

- Fahrenheit or Celsius display is field selectable.
- Solid state sensor provides fast response, accurate temperature readings.
- The 3-1/2 digit LED display has 0.3 inch numerals.
- Front mounting permits fast, easy installation.

Application: Monitors temperature is space or ducts, and fluid in hot or cold water pipes
Contact Ratings: 49 mm diameter, 70 mm long
Frequency: 50 Hz; 60 Hz
Voltage: 24 Vac, +25%, -15%. For each volt above 26 Vac, derate ambient temperature by 5°F (2.8°C)
Operating Temperature Range: -40°F to +199°F (-40°C to +93°C)
Approximate, Dimensions: 4 9/16 in. high x 1 15/16 wide x 2 3/4 in. deep (116 mm high x 49 mm wide x 70 mm deep)

Accessories:
107324A – Capillary Holder Assembly for duct insertion, 8 3/8 in. long
131524A/U – Capillary Holder Assembly, 8 3/8 in. long, duct insertion

Replacement Parts:
121371A/U – Copper. Bulb size: 3/8 in. x 3 in. (10 mm x 76 mm). Well size: 3 in. (76 mm) insertion, 1 1/2 in. NPT. Includes mounting clamp.
121371E/U – Stainless steel. Bulb size: 3/8 in. x 3 in. (10 mm x 76 mm). Well size: 3 in. (76 mm) insertion, 1 1/2 in. (38 mm) insulation, 1/2 in. (13 mm) NPT. Includes mounting clamp.
131524A/U – Capillary Holder Assembly, 8 3/8 in. long, duct insertion
230038A/U – Replacement Faceplate Lens for use with W9076

Material Number	Description	Comments	Includes	Used With
W9076A1000/U	Digital Temperature indicator that provides a continuous LED display for temperature (includes sensor)	Solid state sensor usable up to 300 ft (91 m)	194950E Sensor	T7047C1090 Case (for wall mounting the remote sensor), 121371A Immersion Well, 131524A/107324A/311266D Holders for duct mounting sensor, 107408 Heat-inductive compound

W973 Logic Panel

Control heating, cooling and economizer operation in commercial air conditioning and heat pump equipment.

- Proven, reliable temperature control.
- Many flexible versions to meet your application needs.
- Panels can be used with staged gas, oil, or electric heat; modulating gas, hot water, or steam heat; and direct expansion or modulating chilled water cooling.
- Control up to 3 on-off heat or cool stages or up to 10 on-off heat and/or cool stages using W975 Satellite Sequencers.
- Modulating dc current signal controls economizer heating or cooling valve motors.
- T7067 Dual Setpoint Thermostat/Transmitter located in controlled space provides heating and cooling input signal based on space demand.
- C7046A sensor located in discharge air duct provides heating/cooling anticipation and economizer modulating low limit signal.
- System cycles all stages off on power interruption.
- When power is restored, system sequences required stages on with timed inter-stage delay.

Compatible With: T7067 Thermostat with Q667 subbase
Contact Ratings: NO 240 VA inrush @ 24 Vac, 60 VA running @ 24 Vac; NC 75 VA inrush @ 24 Vac, 30 VA running @ 24 Vac
Electrical Connections: 1/4 in. quick-connect male terminals
Frequency: 50 Hz; 60 Hz
Power Consumption: 8 VA
Control System: W973 single zone
Voltage: 24 Vac
Operating Temperature Range: -40°F to +150°F (-40°C to +66°C)
Approximate, Dimensions: 6 1/4 in. high x 4 1/8 in. wide x 2 5/16 in. deep (159 mm high x 105 mm wide x 59 mm deep)

Shipping and Storage Temperature Range: -30°F to +150°F (-34°C to +65°C)
Approvals, Underwriters Laboratories Inc.: Component Recognized: File No. SA481
Approvals, CSA: File No. LR95329-3

Accessories:
4074EAC/U – Resistor Kit. Required for use when using M7364, M7164, M7184, M7186, M7685, or M7185 motors with W973

Material Number	Application	Application Size	Output Type	Comments
W973A1017/U	Packaged RTU; Furnace; Heat Pump Systems; Split System	2 Heat / 2 Cool	Staged On/Off	
W973B1016/U	Packaged RTU; Furnace; Heat Pump Systems; Split System	3 Heat / 3 Cool	Staged On/Off	Provides modulating heating output and modulating cooling output
W973B1024/U	Packaged RTU; Furnace; Heat Pump Systems; Split System	3 Heat / 3 Cool	Staged On/Off	Provides modulating heating output and modulating cooling output
W973E1005/U	Packaged RTU; Furnace; Heat Pump Systems; Split System	0 Heat / 4 Cool	Staged On/Off	
W973J1017/U	Packaged RTU; Furnace; Heat Pump Systems; Split System	4 Heat / 4 Cool	Staged On/Off	
W973J1025/U	Packaged RTU; Furnace; Heat Pump Systems; Split System			

Environmental Control Systems Accessories

Material Number	Description	Used With	
230038A/U	Replacement Faceplate Lens for use with W9076	W9076	
S963B1003/U	Manual Potentiometer (360 ohm)	T7022; T7023	
S963B1037/U	Manual Potentiometer (480 ohm)		
S963B1078/U	Manual Potentiometer (500 ohm)		
S963B1086/U	Manual Potentiometer (1000 ohm)		
S963B1128/U	Manual Potentiometer (135 ohm)		
S963B1136/U	Manual Potentiometer (270 ohm)		
S963B1177/U	Manual Potentiometer (480 ohm)		
S963D1001/U	2 Potentiometers that simulate the ramp signals of a T7067 Thermostat		

L480; L482 Refrigeration Controller

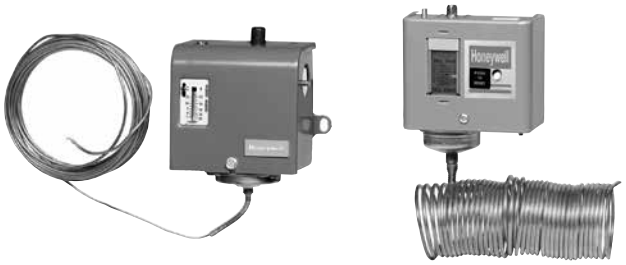

Used to limit or control temperature in air conditioning systems or refrigerated enclosures.

- Applications include freezer cabinets, display cases, beverage coolers, milk cooling tanks and air conditioners.
- Can act as a frost alarm operator in storehouses or orchards where frost would damage crops or equipment.
- Dual temperature scaleplate provided for both Fahrenheit and Celsius readings.

Type: Averaging element
Voltage: 120 Vac; 240 Vac
Frequency: 50 Hz; 60 Hz
Capillary Length: 20 ft (6.1 m)
Approvals, Underwriters Laboratories Inc.: File: SA481, Guide: SDFY
Approvals, CSA: Certified: File No. LR95329-1

L482 Dimensions in inches (millimeters)

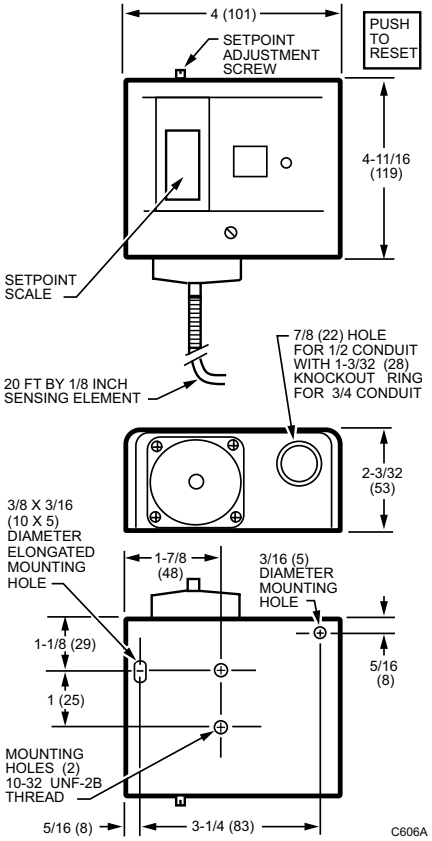

L482 Dimensions in inches (millimeters)

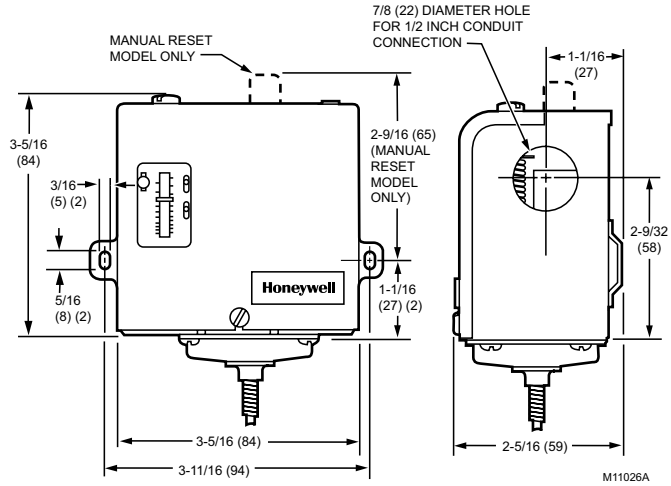

Material Number	Application	Differential Temperature	Operating Temperature Range	Setpoint Temperature Range	Switching	Contact Ratings	Comments
L480B1239/U	Acts as frost alarm in storehouses, orchards, or other locations where frost could damage crops or equipment.	10°F (5.6°C)	125°F Maximum (52°C Maximum)	20°F to 60°F	1 SPDT	120 Vac – 10.2 AFL, 61.2 ALR; 240 Vac – 6.5 AFL, 39.0 ALR	
L480G1044/U	For temperature or limit control of air conditioning systems and refrigeration units.	15°F (8°C)	125°F Maximum (52°C Maximum)	20°F to 60°F	1 SPST	120 Vac – 10.2 AFL, 61.2 ALR; 240 Vac – 6.5 AFL, 39.0 ALR	Manual reset
L482A1004/U	Provides temperature or limit control of air conditioning systems by operating electric motors for dampers, valves, compressors, or fans.	5°F (2.8°C)	140°F Maximum (60°C Maximum)	34°F to 55°F	2 SPST, one N.O., one N.C.	120 Vac – Main: 8.0 AFL, 48.0 ALR, Aux: 6.0 AFL, 36.0 ALR; 240 Vac – Main: 5.1 AFL, 30.6 ALR, Aux: 3.0 AFL, 18.0 ALR	Manual reset; Range stop cannot be removed

T4031A; T6031A Refrigeration Temperature Controller

Provide limit or temperature control in refrigerated areas where remote mounting of sensing element is required.

- Liquid-filled copper elements provide rapid sensing to control the compressor system.
- Control temperature in a duct, tank, freezer or cooler.
- Controller element can be directly immersed in the controlled medium.
- Adjustable control setpoint.
- Ambient temperature compensation provides good temperature control.
- Refer to T775 Electronic Remote Temperature Controller where more exact control is required and/or remote controller location is preferred.

Dimensions in inches (millimeters)

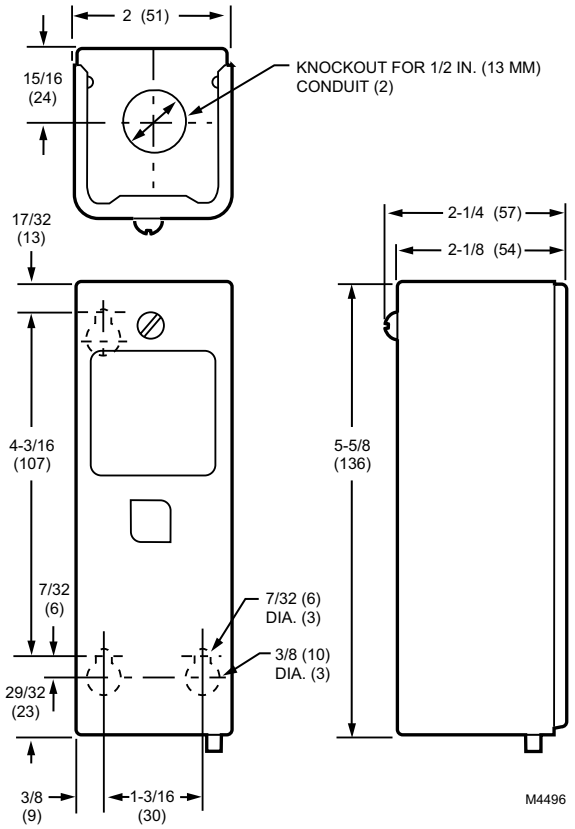

Type: Remote bulb
Voltage: 120 Vac; 240 Vac
Contact Ratings: 120 Vac – 8.0 AFL, 48.0 ALR; 240 Vac – 5.1 AFL, 30.6 ALR
Approximate, Dimensions: 5 5/8 in. high x 2 in. wide x 2 1/4 in. deep (143 mm high x 51 mm wide x 57 mm deep)
Sensor Element: Copper bulb
Operating Temperature Range: 125°F Maximum (52°C Maximum)
Bulb Size: 3/8 in. diameter x 3 in. long (10 mm diameter x 76 mm long)
Approvals, Underwriters Laboratories Inc.: File SA481, Vol. 3, Sec. 5, Guide SPFY
Approvals, CSA: Certified: File No. LR95329-1

Material Number	Application	Switching	Capillary Length	Differential Temperature	Setpoint Temperature Range	Tradeline Value	Comments
T4031A1073/U	Provides control of cooled or refrigerated space	1 SPST	8 ft (2.44 m)	3.5°F	-30°F to +90°F		
T6031A1011/U	Provides control of cooled or refrigerated space	1 SPDT	5 ft (1.5 m)	3.5°F to 16°F	15°F to 90°F		
T6031A1029/U	Provides control of cooled or refrigerated space	1 SPDT	8 ft (2.4 m)	3.5°F to 16°F	-30°F to +90°F	Super Tradeline	Includes mounting plate, hanger and screws
T6031A1052/U	Provides control of cooled or refrigerated space	1 SPDT	5 ft (1.5 m)	3.5°F to 16°F	-30°F to +90°F		
T6031A1060/U	Provides control of cooled or refrigerated space	1 SPDT	20 ft (6.1 m)	3.5°F to 16°F	-30°F to +90°F		
T6031A1086/U	Provides control of cooled or refrigerated space	1 SPDT	8 ft (2.4 m)	(1.9°C to 8.9°C)	(-35°C to +30°C)		Celsius model
T6031A1136/U	Provides control of cooled or refrigerated space	1 SPDT	8 ft (2.4 m)	3.5°F to 16°F	-30°F to +90°F		
T6031A1219/U	Provides control of cooled or refrigerated space	1 SPDT	8 ft (2.4 m)	(1.9°C to 8.9°C)	(-35°C to +30°C)		Celsius model, Bi-lingual French
T6031A1227/U	Provides control of cooled or refrigerated space	1 SPDT	5 ft (1.5 m)	(1.9°C to 8.9°C)	(-35°C to +30°C)		Celsius model, Bi-lingual French
T6031A1235/U	Provides control of cooled or refrigerated space	1 SPDT	20 ft (6.1 m)	(1.9°C to 8.9°C)	(-35°C to +30°C)		Celsius model, Bi-lingual French

S437; S637 Sail Switch

S437 Sail Switches respond to the air velocity in heating or warm air ducts, such as used in farm crop dryers. The switch completes a 24V or line voltage burner control circuit only when the blower or fan has produced a preset air velocity.

- Micro Switch SPST snap switch is operated by metal sail inserted in an air stream.
- Sail can trimmed to one-half the original size to double the velocity required to close the snap switch contacts.
- Switch differential can be manually adjusted by turning a knurled knob on the snap switch.
- A conduit knockout is located on each end of the case for wiring convenience.

Application: Sail Switch
Contact Ratings (AFL): 8.0 A @ 120 Vac; 5.1 A @ 240 Vac; 2.0 A @ 24 Vac; 15.0 A @ 6 Vdc; 7.5 A @ 12 Vdc
Contact Ratings (ALR): 48.0 A @ 120 Vac; 30.6 A @ 240 Vac

Ambient Temperature Range: 150°F Maximum (66°C Maximum)
Approvals, CSA: CSA: Guide: MFHZ
Approvals, Underwriters Laboratories Inc.: UL: File: MP2618

Material Number	Switching	Operating Velocity (fpm)	Operating Velocity (m/s)	Approximate, Dimensions	Insertion Length
S437A1009/U	1 SPST	1900 fpm-2250 fpm	9.7 m/s-11.4 m/s	2 15/16 in. high x 3 3/4 in. wide x 2 in. deep; Sail Dimensions – 1 in. x 3 in. (59 mm high x 95 mm wide x 51 mm deep; Sail Dimensions – 25 mm x 76 mm)	3 1/2 in. (89 mm)
S437A1025/U	1 SPST	1900 fpm-2250 fpm	9.7 m/s-11.4 m/s	2 15/16 in. high x 3 3/4 in. wide x 2 in. deep; Sail Dimensions – 1 1/2 in. x 4 in. (59 mm high x 95 mm wide x 51 mm deep; Sail Dimensions – 38 mm x 102 mm)	3 1/2 in. (89 mm)
S637A1004/U	1 SPDT	1900 fpm-2250 fpm	9.7 m/s-11.4 m/s	2 15/16 in. high x 3 3/4 in. wide x 2 in. deep; Sail Dimensions – 1 in. x 3 in. (59 mm high x 95 mm wide x 51 mm deep; Sail Dimensions – 25 mm x 76 mm)	3 1/2 in. (89 mm)

T4031C; T6031C, D Ambistat Controller

Ambient temperature compensated, high-limit controllers for HVAC, agriculture, and industrial applications.

- Suitable for line-voltage, low voltage, or millivolt (PowerPile) control of bulk milk tanks, beverage dispensing machines, ice cube machines, dishwashers, crop drying, tobacco curing, and similar applications.
- Enclosed snap action switches available with SPST or SPDT action.
- Models available that make or break on temperature rise.
- Screwdriver adjustment for temperature setting; external knob option.
- Immersion well not included.

Dimensions in inches (millimeters)

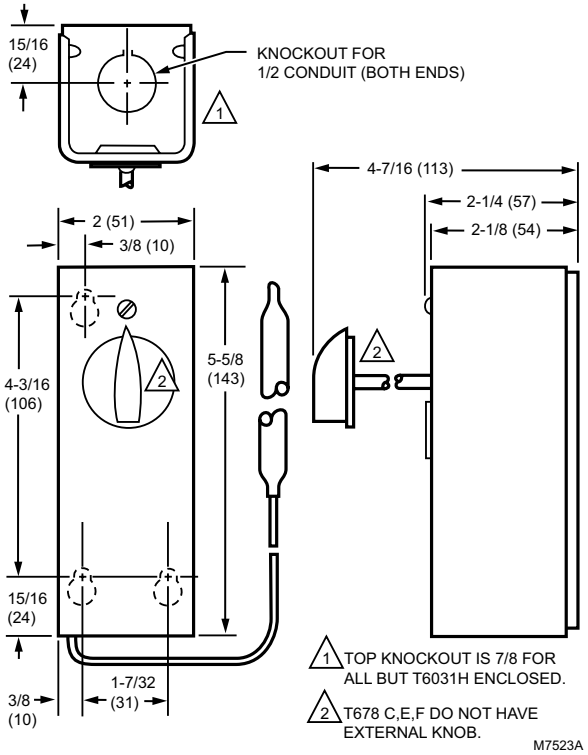

Application: Line-voltage, low-voltage or millivolt (PowerPile) control of bulk milk tanks, beverage dispensing machines, ice cube machines, dishwashers, crop drying, tobacco curing and similar applications.
Type: Remote bulb
Output: relay
Voltage: 120 Vac; 240 Vac
Frequency: 50 Hz; 60 Hz
Approximate, Dimensions: 5 5/8 in. high x 2 in. wide x 2 1/8 in. deep (143 mm high x 51 mm wide x 54 mm deep)
Sensor Inputs: 1
Bulb Size: 3/8 in. diameter x 2 7/8 in. long (10 mm diameter x 73 mm long)
Color: Gray
Approvals, Underwriters Laboratories Inc.: Component Recognized

Material Number	Sensor Element	Capillary Length	Differential Temperature	Setpoint Temperature Range	Operating Temperature Range	Relay Outputs	Contact Ratings	Tradeline Value	Comments
T4031C1012/U	Copper bulb	5 1/2 ft (1.7 m)	5°F (2.8°C)	40°F to 180°F (4°C to 82°C)	205°F Maximum (96°C Maximum)	1 SPST, break on temperature rise	120 Vac – 8.0 AFL, 48.0 ALR; 240 Vac – 5.1 AFL, 30.6 ALR		Break on temperature rise
T6031C1009/U	Copper bulb	5 1/2 ft (1.7 m)	2°F (1.1°C)	40°F to 180°F (4°C to 82°C)	205°F Maximum (96°C Maximum)	1 SPDT	120 and 240 Vac – 120 VA pilot duty	Tradeline	
T6031C1058/U	Stainless steel bulb	5 ft (1.5 m)	2°F (1.1°C)	100°F to 240°F (38°C to 116°C)	265°F Maximum (130°C Maximum)	1 SPDT	120 and 240 Vac – 120 VA pilot duty		
T6031D1015/U	Copper bulb	5 1/2 ft (1.7 m)	5°F (2.8°C)	40°F to 180°F (4°C to 82°C)		1 SPDT	120 Vac – 8.0 AFL, 48.0 ALR; 240 Vac – 5.1 AFL, 30.6 ALR		
T6031D1031/U	Copper bulb	5 1/2 ft (1.7 m)	5°F (2.8°C)	0°F to 70°F (-18°C to +21°C)	170°F Maximum (77°C Maximum)	1 SPDT	120 Vac – 8.0 AFL, 48.0 ALR; 240 Vac – 5.1 AFL, 30.6 ALR		
T6031D1049/U	Copper bulb	5 1/2 ft (1.7 m)	7°F (3.9°C)	30°F to 270°F (-1°C to +132°C)	305°F Maximum (152°C Maximum)	1 SPDT	120 Vac – 8.0 AFL, 48.0 ALR; 240 Vac – 5.1 AFL, 30.6 ALR		

T6031E Unit Thermostat

Ambient temperature compensated, high-limit controllers for HVAC, agriculture and industrial applications.

- Suitable for line-voltage, low voltage, or millivolt (Powerpile) control of bulk milk tanks, beverage dispensing machines, ice cube machines, dishwashers, crop drying, tobacco curing, and similar applications.
- Enclosed snap action switches available with SPST or SPDT action.
- Models available that make or break on temperature rise.
- Screwdriver adjustment for temperature setting; external knob option.
- Immersion well not included.

Dimensions in inches (millimeters)

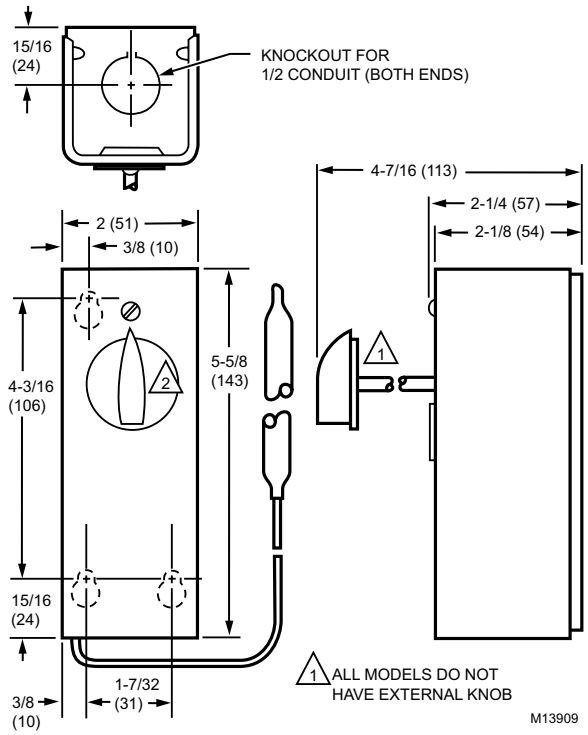

Application: Remote bulb temperature control
Type: Remote bulb
Voltage: 120 Vac; 240 Vac
Frequency: 50 Hz; 60 Hz
Contact Ratings: 120 Vac – 3.2 AFL, 19.2 ALR; 240 Vac – 1.6 AFL, 9.6 ALR
Approximate, Dimensions: 5 5/8 in. high x 2 in. wide x 2 1/8 in. deep (143 mm high x 51 mm wide x 54 mm deep)
Sensor Element: Copper bulb
Bulb Size: 5/16 in. diameter x 11 11/16 in. long (8 mm diameter x 297 mm long)
Operating Temperature Range: 150°F Maximum (66°C Maximum)
Color: Gray
Approvals, Underwriters Laboratories Inc.: Component Listed
Approvals, CSA: Listed

Material Number	Setpoint Temperature Range	Differential Temperature	Capillary Length	Relay Outputs	Output	Sensor Inputs
T6031E1004/U	55°F to 90°F (13°C to 32°C)	1.5°F (0.8°C)	5 1/2 ft (1.7 m)	1 SPDT	relay	1

T4054 Return Air Controller

Provides SPDT heavy-duty, line-voltage temperature control in ventilation, heating or cooling systems.

- Use in a variety of farm, industrial or commercial applications.
- Wall or duct mount in any position.
- Fast response, tin-plated element not affected by adverse environment.
- Rugged case.
- Mounts on flat surface with three screws.
- T6064 provides fast response with hydraulic temperature sensing elements mounted on the unit.

Application: Provides control in heating systems
Type: Filled element
Voltage: 120 Vac; 240 Vac
Frequency: 50 Hz; 60 Hz
Approximate, Dimensions: 7 5/8 in. high x 2 5/8 in. wide x 2 in. deep (194 mm high x 67 mm wide x 51 mm deep)
Sensor Element: Fast response capillary

Operating Temperature Range: 125°F Maximum (52°C Maximum)
Accuracy: ±6°F (±3.3°C)
Differential Temperature: 3.5°F (1.9°C)
Color: Gray
Approvals, Underwriters Laboratories Inc.: Listed: E4436, vol. 5, sec. 12, Guide XAPX
Approvals, CSA: CSA Listed: Report -1

Material Number	Application	Setpoint Temperature Range	Relay Outputs	Output	Sensor Inputs	Contact Ratings	Comments
T4054A1000/U	Provides control in heating systems	36°F to 100°F (2°C to 38°C)	1 SPST	relay	1	120 Vac – 16.0 AFL, 96.0 ALR; 240 Vac – 8.0 AFL, 48.0 ALR	Make R to B on temperature fall
T4054B1016/U	Provides control in cooling systems	36°F to 100°F (2°C to 38°C)	1 SPST	relay	1	120 Vac – 16.0 AFL, 80.0 ALR; 240 Vac – 8.0 AFL, 40.0 ALR	Make R to W on temperature rise

T6054 Utility Line Voltage Thermostat

Provides SPDT heavy-duty, line-voltage temperature control in ventilation, heating or cooling systems.

- Use in a variety of farm, industrial or commercial applications.
- Wall or duct mount in any position.
- Fast response, tin-plated element not affected by adverse environment.
- Rugged case.
- Mounts on flat surface with three screws.

Dimensions in inches (millimeters)

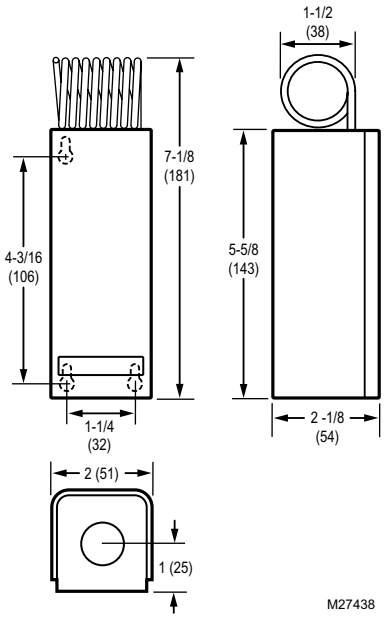

Application: Provides control in ventilation, heating, cooling or heating-cooling systems
Type: Filled element
Voltage: 120 Vac; 240 Vac
Frequency: 50 Hz; 60 Hz
Contact Ratings: 120 Vac – 7.4 AFL, 44.4 ALR; 240 Vac – 3.7 AFL, 22.2 ALR
Approximate, Dimensions: 7 1/4 in. high x 2 5/8 in. wide x 2 in. deep (184 mm high x 67 mm wide x 51 mm deep)
Sensor Element: Copper filled element
Accuracy: ±10°F (±5.6°C)
Color: Gray
Tradeline Value: Tradeline
Approvals, Underwriters Laboratories Inc.: Listed: E4436, vol. 5, sec. 12, Guide XAPX
Approvals, CSA: CSA Listed: Report -1

Material Number	Operating Temperature Range	Setpoint Temperature Range	Differential Temperature	Relay Outputs	Output	Sensor Inputs	Includes
T6054A1005/U	125°F Maximum (52°C Maximum)	-30°F to +110°F (-34°C to +43°C)	3.5°F (1.9°C)	1 SPDT	relay	1	Case

T631A, B, C Farm Controllers

Provide line voltage control of heating, cooling and ventilating systems in farm buildings or storage areas.

- Use in barns, poultry houses, hog barns, pump houses, milk houses and crop storage houses.
- Treated to resist corrosion.
- Slots in front and bottom of case provide maximum air circulation over the coiled sensing element.
- SPDT snap switches permanently sealed against corrosion.
- Easy mounting using screws through holes in back of case.

Dimensions in inches (millimeters)

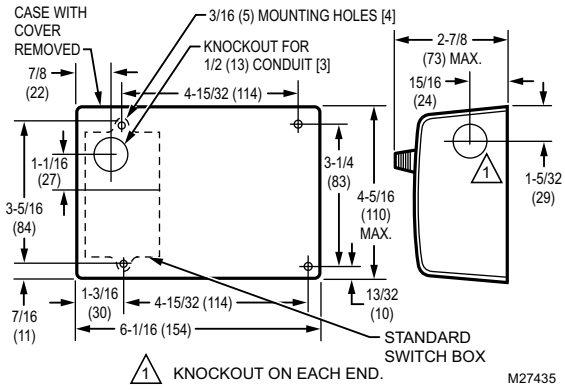

Application: Provide line voltage control of heating, cooling and ventilating systems in farm buildings or storage areas
Type: Agricultural Temperature Controller
Frequency: 50 Hz; 60 Hz
Approximate, Dimensions: 4 5/16 in. high x 6 1/16 in. wide x 2 7/8 in. deep (110 mm high x 154 mm wide x 73 mm deep)
Sensor Element: Coiled Copper Tube
Color: T631A, B-Red finish; T631C-Gray finish
Approvals, Underwriters Laboratories Inc.: File No. E4436 Vol. 1 Sec. UL Guide XAPX
Approvals, CSA: Certified: File No. LR1620, Guide No. 400-E-O

Material Number	Contact Ratings
T631A1006/U	24 Vac – 2.0A AFL; 120 Vac – 7.4 AFL, 44.4 ALR; 240 Vac – 3.7 AFL, 22.2 ALR
T631A1022/U	24 Vac – 2.0A AFL; 120 Vac – 7.4 AFL, 44.4 ALR; 240 Vac – 3.7 AFL, 22.2 ALR
T631A1030/U	24 Vac – 2.0A AFL; 120 Vac – 7.4 AFL, 44.4 ALR; 240 Vac – 3.7 AFL, 22.2 ALR
T631A1063/U	24 Vac – 2.0A AFL; 120 Vac – 7.4 AFL, 44.4 ALR; 240 Vac – 3.7 AFL, 22.2 ALR
T631A1113/U	120 Vac – 16.0 AFL, 96.0 ALR; 240 Vac – 8.0 AFL, 48.0 ALR
T631A1154/U	24 Vac – 2.0A AFL; 120 Vac – 7.4 AFL, 44.4 ALR; 240 Vac – 3.7 AFL, 22.2 ALR
T631A1162/U	24 Vac –2.0A AFL; 120 Vac – 16.0 AFL, 96.0 ALR; 240 Vac – 8.0 AFL, 48.0 ALR
T631B1005/U	24 Vac – 2.0A AFL; 120 Vac – 7.4 AFL, 44.4 ALR; 240 Vac – 3.7 AFL, 22.2 ALR
T631B1054/U	120 Vac – 16.0 AFL, 96.0 ALR; 240 Vac – 8.0 AFL, 48.0 ALR
T631B1070/U	24 Vac –2.0A AFL; 120 Vac – 16.0 AFL, 96.0 ALR; 240 Vac – 8.0 AFL, 48.0 ALR
T631C1012/U	120 Vac – 16.0 AFL, 96.0 ALR; 240 Vac – 8.0 AFL, 48.0 ALR
T631C1020/U	24 Vac – 2.0A AFL; 120 Vac – 7.4 AFL, 44.4 ALR; 240 Vac – 3.7 AFL, 22.2 ALR
T631C1038/U	24 Vac – 2.0A AFL; 120 Vac – 7.4 AFL, 44.4 ALR; 240 Vac – 3.7 AFL, 22.2 ALR
T631C1046/U	24 Vac – 2.0A AFL; 120 Vac – 7.4 AFL, 44.4 ALR; 240 Vac – 3.7 AFL, 22.2 ALR
T631C1053/U	24 Vac – 2.0A AFL; 120 Vac – 7.4 AFL, 44.4 ALR; 240 Vac – 3.7 AFL, 22.2 ALR
T631C1103/U	120 Vac – 16.0 AFL, 96.0 ALR; 240 Vac – 8.0 AFL, 48.0 ALR
T631C1160/U	24 Vac – 2.0A AFL; 120 Vac – 7.4 AFL, 44.4 ALR; 240 Vac – 3.7 AFL, 22.2 ALR

Material Number	Operating Temperature Range	Setpoint Temperature Range	Differential Temperature	Output	Interstage Differential Temperature	Voltage	Comments
T631A1006/U	120°F Maximum (49°C Maximum)	35°F to 100°F	2°F (1.1°C)	1 SPDT		24 Vac or 120/240 Vac	
T631A1022/U	150°F Maximum (66°C Maximum)	70°F to 140°F	2°F (1.1°C)	1 SPDT		24 Vac or 120/240 Vac	
T631A1030/U	125°F Maximum (52°C Maximum)	0°F to 70°F	3°F (1.7°C)	1 SPDT		24 Vac or 120/240 Vac	
T631A1063/U	125°F Maximum (52°C Maximum)	-10°F to +100°F	3°F (1.7°C)	1 SPDT		24 Vac or 120/240 Vac	
T631A1113/U	120°F Maximum (49°C Maximum)	35°F to 100°F	3.5°F (1.9°C)	1 SPDT (1 hp at 0.7 kW)		120 Vac; 240 Vac	
T631A1154/U	120°F Maximum (49°C Maximum)	(0°C to 40°C)	2°F (1.1°C)	1 SPDT		24 Vac or 120/240 Vac	Celsius model
T631A1162/U	120°F Maximum (49°C Maximum)	35°F to 100°F	2°F (1.1°C)	1 SPDT (1 hp at 0.7 kW)		24 Vac or 120/240 Vac	
T631B1005/U	120°F Maximum (49°C Maximum)	35°F to 100°F	2°F (1.1°C)	2 SPDT	1.9°C (3.5°F)	120 Vac; 240 Vac	
T631B1054/U	120°F Maximum (49°C Maximum)	35°F to 100°F	2°F (1.1°C)	2 SPDT (1 hp at 0.7 kW)	0°C to 4°C adjustable (0°F to 7°F adjustable)	120 Vac; 240 Vac	
T631B1070/U	120°F Maximum (49°C Maximum)	35°F to 100°F	2°F (1.1°C)	2 SPDT (1 hp at 0.7 kW)	1.9°C (3.5°F)	24 Vac or 120/240 Vac	
T631C1012/U	125°F Maximum (52°C Maximum)	20°F to 90°F	3°F (1.7°C)	1 SPDT (1 hp at 0.7 kW)		120 Vac; 240 Vac	
T631C1020/U	150°F Maximum (66°C Maximum)	70°F to 140°F	2°F (1.1°C)	1 SPDT		24 Vac or 120/240 Vac	

Temperature Controllers

Material Number	Operating Temperature Range	Setpoint Temperature Range	Differential Temperature	Output	Interstage Differential Temperature	Voltage	Comments
T631C1038/U	125°F Maximum (52°C Maximum)	(-10°C to +30°C)	3°F (1.7°C)	1 SPDT		24 Vac or 120/240 Vac	Celsius model
T631C1046/U	150°F Maximum (66°C Maximum)	(20°C to 60°C)	2°F (1.1°C)	1 SPDT		24 Vac or 120/240 Vac	Celsius model
T631C1053/U	120°F Maximum (49°C Maximum)	35°F to 100°F	2°F (1.1°C)	1 SPDT		120 Vac; 240 Vac	
T631C1103/U	125°F Maximum (52°C Maximum)	-30°F to +100°F	5°F (2.8°C)	1 SPDT (1 hp at 0.7 kW)		24 Vac or 120/240 Vac	
T631C1160/U	150°F Maximum (66°C Maximum)	(20°C to 60°C)	2°F (1.1°C)	1 SPDT		24 Vac or 120/240 Vac	Scale in Celsius

T631F, G NEMA IV Controllers

Provide line voltage control of heating, cooling and ventilating systems in farm buildings, storage areas and industrial environments; watertight, dust-proof enclosure.

- Use in barns, brooder houses, poultry houses, hog barns, pump houses, milk houses, crop storage houses and industrial environments. NEMA 4X enclosure protects thermostat and wiring connections from oil, water, dust, and corrosion.
- Clear plastic cover reveals setpoint, discourages tampering.
- Sensing element externally mounted for fast response and tin plated to resist corrosion.
- Reliable snap switches sealed against contamination.
- Insulated case has internal grounding screw for safety.
- Meet National Electrical Code Article 547-4 requirements.
- Easy mounting with screws through holes in flanges on case.

Application: Provide line voltage control of heating, cooling and ventilating systems in farm buildings or storage areas
Type: Agricultural Temperature Controller
Frequency: 50 Hz; 60 Hz
Approximate, Dimensions: 5 in. high x 6 1/2 in. wide x 3 13/16 in. deep (127 mm high x 165 mm wide x 97 mm deep)
Sensor Element: Coiled, Tin-plated Copper Tube
Setpoint Temperature Range: 35°F to 100°F
Operating Temperature Range: 145°F Maximum (63°F Maximum)
Differential Temperature: 2°F (1.1°C)
Interstage Differential Temperature: 0°C to 4°C adjustable (0°F to 7°F adjustable)
Color: Gray finish
Approvals, Underwriters Laboratories Inc.: File No. E4436 Vol. 1 Sec. UL Guide XAPX
Approvals, CSA: Certified: File No. LR1620, Guide No. 400-E-O

Dimensions in inches (millimeters)

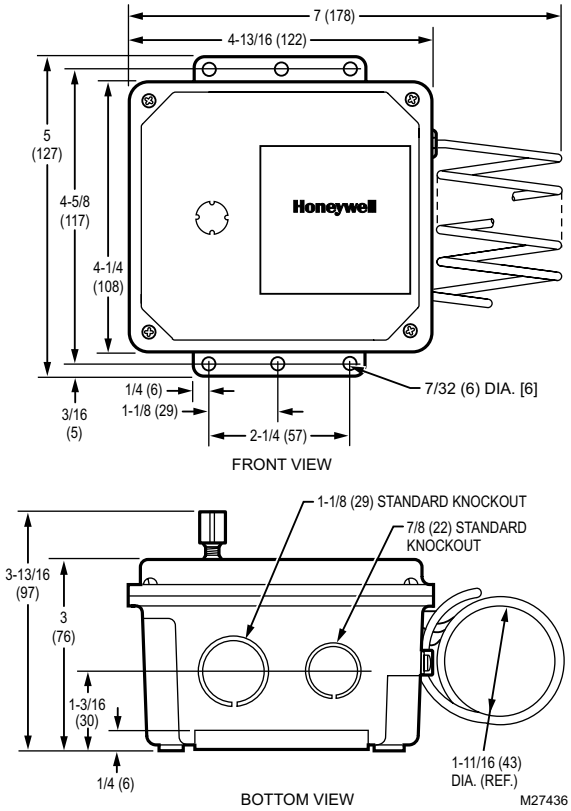

Material Number	Voltage	Output	Contact Ratings	Comments
T631F1068/U	24 Vac or 120/240 Vac	1 SPDT	24 Vac – 2.0A AFL; 120 Vac – 7.4 AFL, 44.4 ALR; 240 Vac – 3.7 AFL, 22.2 ALR	Internal Setpoint Adjustment
T631F1084/U	24 Vac or 120/240 Vac	1 SPDT	24 Vac – 2.0A AFL; 120 Vac – 7.4 AFL, 44.4 ALR; 240 Vac – 3.7 AFL, 22.2 ALR	External Setpoint Adjustment
T631F1092/U	120 Vac; 240 Vac	1 SPDT (1 hp)	120 Vac – 16.0 AFL, 96.0 ALR; 240 Vac – 8.0 AFL, 48.0 ALR	External Setpoint Adjustment
T631G1059/U	120 Vac; 240 Vac	2 SPDT (1 hp)	120 Vac – 16.0 AFL, 96.0 ALR; 240 Vac – 8.0 AFL, 48.0 ALR	External Setpoint Adjustment

T675A, B; T678A Remote Bulb Controllers

Remote bulb thermostats regulate temperature of air or liquids in ducts, pipes, tanks and boilers.

- Suitable for applications requiring temperature control of air or liquids where controller must be placed outside the sensing area.
- Typical uses include control of dampers and valves in heating, cooling and heating-cooling systems.
- Fast response models (available for use in return air duct) operate approximately four times faster than standard models.
- Controller can be mounted in any position.
- Ambient temperature compensation provides good temperature control.
- Refer to T775 Electronic Remote Temperature Controller where more exact control is required and/or remote controller location is preferred.
- T675A models with fixed differential have an electrical rating of 125 VA at 120/208/240 and 277 Vac.
- T675B models have 125 VA pilot duty up to 277 Vac.
- T678 models have a maximum connected load of 2000 VA.

Application: Regulates temperature of air or liquids in ducts, pipes, tanks and boilers
Type: Remote bulb
Output: relay
Relay Outputs: T675A, B-1 SPDT; T678A-2 SPDT switch contacts
Voltage: 120 Vac or 240/277 Vac
Frequency: 50 Hz; 60 Hz
Approximate, Dimensions: 5 5/8 in. high x 2 in. wide x 2 5/8 in. deep (143 mm high x 51 mm wide x 67 mm deep)
Sensor Inputs: 1
Approvals, Underwriters Laboratories Inc.: UL Listed
Approvals, CSA: Certified

Dimensions in inches (millimeters)

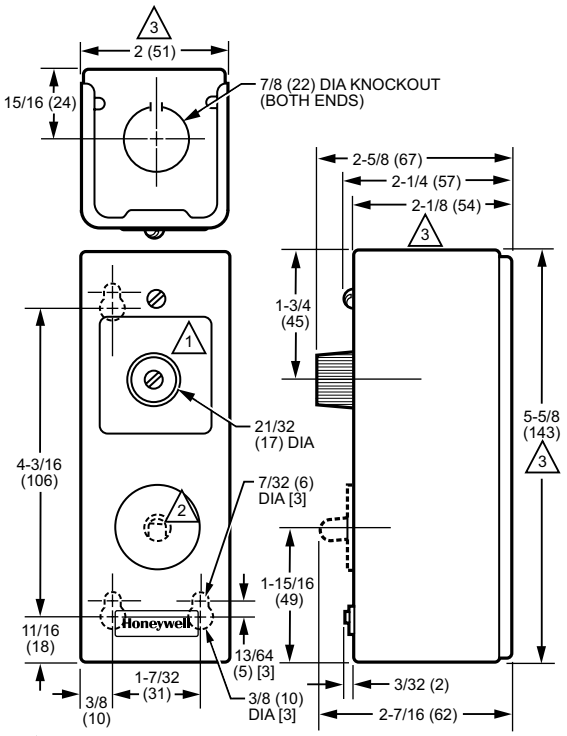

1 T675B DOES NOT HAVE AN ADJUSTMENT KNOB.

2 T675B HAS A MANUAL RESET BUTTON (INDICATED BY DASHED LINES).

3 TRADELINE MODELS T675A, T678A ONLY – NOREL COVER INCREASES THESE DIMENSIONS BY APPROXIMATELY 1/8 IN. (3).

M23928

Material Number	Contact Ratings
T675A1003/U	120 Vac – 8.0 AFL, 48.0 ALR. 125 VA Pilot Duty; 240 Vac – 5.1 AFL, 30.6 ALR, 125 VA Pilot Duty; 277 Vac – 4.2 AFL, 25.2 ALR, 125 VA Pilot Duty
T675A1029/U	120 Vac – 8.0 AFL, 48.0 ALR. 125 VA Pilot Duty; 240 Vac – 5.1 AFL, 30.6 ALR, 125 VA Pilot Duty; 277 Vac – 4.2 AFL, 25.2 ALR, 125 VA Pilot Duty
T675A1045/U	120 Vac – 8.0 AFL, 48.0 ALR; 240 Vac – 5.1 AFL, 30.6 ALR; 277 Vac – 4.2 AFL, 25.2 ALR
T675A1102/U	120 Vac – 8.0 AFL, 48.0 ALR; 240 Vac – 5.1 AFL, 30.6 ALR; 277 Vac – 4.2 AFL, 25.2 ALR
T675A1136/U	120, 240, and 277 Vac – 125 VA
T675A1169/U	120 Vac – 8.0 AFL, 48.0 ALR. 125 VA Pilot Duty; 240 Vac – 5.1 AFL, 30.6 ALR, 125 VA Pilot Duty; 277 Vac – 4.2 AFL, 25.2 ALR, 125 VA Pilot Duty
T675A1243/U	120 Vac – 8.0 AFL, 48.0 ALR; 240 Vac – 5.1 AFL, 30.6 ALR; 277 Vac – 4.2 AFL, 25.2 ALR
T675A1284/U	120 Vac – 8.0 AFL, 48.0 ALR. 125 VA Pilot Duty; 240 Vac – 5.1 AFL, 30.6 ALR, 125 VA Pilot Duty; 277 Vac – 4.2 AFL, 25.2 ALR, 125 VA Pilot Duty
T675A1425/U	120 Vac – 8.0 AFL, 48.0 ALR; 240 Vac – 5.1 AFL, 30.6 ALR; 277 Vac – 4.2 AFL, 25.2 ALR
T675A1458/U	120, 240, and 277 Vac – 125 VA
T675A1466/U	120 Vac – 8.0 AFL, 48.0 ALR. 125 VA Pilot Duty; 240 Vac – 5.1 AFL, 30.6 ALR, 125 VA Pilot Duty; 277 Vac – 4.2 AFL, 25.2 ALR, 125 VA Pilot Duty
T675A1474/U	120 Vac – 8.0 AFL, 48.0 ALR. 125 VA Pilot Duty; 240 Vac – 5.1 AFL, 30.6 ALR, 125 VA Pilot Duty; 277 Vac – 4.2 AFL, 25.2 ALR, 125 VA Pilot Duty
T675A1508/U	120 Vac – 8.0 AFL, 48.0 ALR; 240 Vac – 5.1 AFL, 30.6 ALR; 277 Vac – 4.2 AFL, 25.2 ALR
T675A1516/U	120, 240, and 277 Vac – 125 VA
T675A1524/U	120, 240, and 277 Vac – 125 VA
T675A1532/U	120 Vac – 8.0 AFL, 48.0 ALR; 240 Vac – 5.1 AFL, 30.6 ALR; 277 Vac – 4.2 AFL, 25.2 ALR
T675A1540/U	120 Vac – 8.0 AFL, 48.0 ALR; 240 Vac – 5.1 AFL, 30.6 ALR; 277 Vac – 4.2 AFL, 25.2 ALR
T675A1565/U	120 Vac – 8.0 AFL, 48.0 ALR; 240 Vac – 5.1 AFL, 30.6 ALR; 277 Vac – 4.2 AFL, 25.2 ALR
T675A1706/U	120 Vac – 8.0 AFL, 48.0 ALR; 240 Vac – 5.1 AFL, 30.6 ALR; 277 Vac – 4.2 AFL, 25.2 ALR
T675A1722/U	120 Vac – 8.0 AFL, 48.0 ALR; 240 Vac – 5.1 AFL, 30.6 ALR; 277 Vac – 4.2 AFL, 25.2 ALR
T675A1771/U	120 Vac – 8.0 AFL, 48.0 ALR; 240 Vac – 5.1 AFL, 30.6 ALR; 277 Vac – 4.2 AFL, 25.2 ALR
T675A1805/U	120 Vac – 8.0 AFL, 48.0 ALR. 125 VA Pilot Duty; 240 Vac – 5.1 AFL, 30.6 ALR, 125 VA Pilot Duty; 277 Vac – 4.2 AFL, 25.2 ALR, 125 VA Pilot Duty
T675A1920/U	120 Vac – 8.0 AFL, 48.0 ALR. 125 VA Pilot Duty; 240 Vac – 5.1 AFL, 30.6 ALR, 125 VA Pilot Duty; 277 Vac – 4.2 AFL, 25.2 ALR, 125 VA Pilot Duty
T675A2068/U	120 Vac – 8.0 AFL, 48.0 ALR. 125 VA Pilot Duty; 240 Vac – 5.1 AFL, 30.6 ALR, 125 VA Pilot Duty; 277 Vac – 4.2 AFL, 25.2 ALR, 125 VA Pilot Duty
T675A2076/U	120 Vac – 8.0 AFL, 48.0 ALR. 125 VA Pilot Duty; 240 Vac – 5.1 AFL, 30.6 ALR, 125 VA Pilot Duty; 277 Vac – 4.2 AFL, 25.2 ALR, 125 VA Pilot Duty
T675A2084/U	120 Vac – 8.0 AFL, 48.0 ALR. 125 VA Pilot Duty; 240 Vac – 5.1 AFL, 30.6 ALR, 125 VA Pilot Duty; 277 Vac – 4.2 AFL, 25.2 ALR, 125 VA Pilot Duty

Material Number	Contact Ratings
T675A2100/U	120 Vac – 8.0 AFL, 48.0 ALR. 125 VA Pilot Duty; 240 Vac – 5.1 AFL, 30.6 ALR, 125 VA Pilot Duty; 277 Vac – 4.2 AFL, 25.2 ALR, 125 VA Pilot Duty
T675A2118/U	120 Vac – 8.0 AFL, 48.0 ALR. 125 VA Pilot Duty; 240 Vac – 5.1 AFL, 30.6 ALR, 125 VA Pilot Duty; 277 Vac – 4.2 AFL, 25.2 ALR, 125 VA Pilot Duty
T675B1002/U	120, 240, and 277 Vac – 125 VA
T675B1010/U	120, 240, and 277 Vac – 125 VA
T675B1028/U	120, 240, and 277 Vac – 125 VA
T678A1015/U	120 Vac – 8.0 AFL, 48.0 ALR; 240 Vac – 5.1 AFL, 30.6 ALR; 277 Vac – 4.2 AFL, 25.2 ALR
T678A1155/U	120 Vac – 8.0 AFL, 48.0 ALR; 240 Vac – 5.1 AFL, 30.6 ALR; 277 Vac – 4.2 AFL, 25.2 ALR
T678A1163/U	120 Vac – 8.0 AFL, 48.0 ALR; 240 Vac – 5.1 AFL, 30.6 ALR; 277 Vac – 4.2 AFL, 25.2 ALR
T678A1353/U	120 Vac – 8.0 AFL, 48.0 ALR; 240 Vac – 5.1 AFL, 30.6 ALR; 277 Vac – 4.2 AFL, 25.2 ALR
T678A1361/U	120 Vac – 8.0 AFL, 48.0 ALR; 240 Vac – 5.1 AFL, 30.6 ALR; 277 Vac – 4.2 AFL, 25.2 ALR
T678A1437/U	120 Vac – 8.0 AFL, 48.0 ALR; 240 Vac – 5.1 AFL, 30.6 ALR; 277 Vac – 4.2 AFL, 25.2 ALR
T678A1445/U	120 Vac – 8.0 AFL, 48.0 ALR; 240 Vac – 5.1 AFL, 30.6 ALR; 277 Vac – 4.2 AFL, 25.2 ALR
T678A1478/U	120 Vac – 8.0 AFL, 48.0 ALR; 240 Vac – 5.1 AFL, 30.6 ALR; 277 Vac – 4.2 AFL, 25.2 ALR
T678A1494/U	120 Vac – 8.0 AFL, 48.0 ALR; 240 Vac – 5.1 AFL, 30.6 ALR; 277 Vac – 4.2 AFL, 25.2 ALR
T678A1627/U	120 Vac – 8.0 AFL, 48.0 ALR; 240 Vac – 5.1 AFL, 30.6 ALR; 277 Vac – 4.2 AFL, 25.2 ALR
T678A1692/U	120 Vac – 8.0 AFL, 48.0 ALR; 240 Vac – 5.1 AFL, 30.6 ALR; 277 Vac – 4.2 AFL, 25.2 ALR

Material Number	Operating Temperature Range	Setpoint Temperature Range	Differential Temperature	Interstage Differential Temperature	Sensor Element	Capillary Length	Bulb Size	Tradeline Value	Comments
T675A1003/U	125°F Maximum (52°C Maximum)	0°F to 100°F	3°F to 10°F (1.7°C to 5.6°C)		Copper bulb	5 ft (1.5 m)	1/2 in. x 4 3/16 in. (13 mm dia. x 106 mm long)		
T675A1029/U	125°F Maximum (52°C Maximum)	0°F to 100°F	3°F to 10°F (1.7°C to 5.6°C)		Copper bulb	20 ft (6.1 m)	1/2 in. x 4 3/16 in. (13 mm dia. x 106 mm long)		
T675A1045/U	125°F Maximum (52°C Maximum)	0°F to 100°F (-18°C to +38°C)	3°F to 10°F (1.7°C to 5.6°C)		Stainless steel bulb	20 ft (6.1 m)	1/2 in. x 4 3/16 in. (13 mm dia. x 106 mm long)		Stainless Steel Bulb
T675A1102/U	280°F Maximum (138°C Maximum)	160°F to 260°F (71°C to 127°C)	3°F to 10°F (1.7°C to 5.6°C)		Copper bulb	20 ft (6.1 m)	1/2 in. x 4 3/16 in. (13 mm dia. x 106 mm long)		
T675A1136/U	125°F Maximum (52°C Maximum)	0°F to 100°F (-18°C to +38°C)	1°F fixed (0.6°C fixed)		Copper bulb	20 ft (6.1 m)	1/2 in. x 4 3/16 in. (13 mm dia. x 106 mm long)		
T675A1169/U	(52°C Maximum)	(-15°C to +35°C)	(1.7°C to 5.6°C)		Copper bulb	5 ft (1.5 m)	1/2 in. x 4 3/16 in. (13 mm dia. x 106 mm long)		Celsius model
T675A1243/U	(52°C Maximum)	(75°C to 125°C)	(1.7°C to 5.6°C)		Copper bulb	5 ft (1.5 m)	1/2 in. x 4 3/16 in. (13 mm dia. x 106 mm long)		Celsius model
T675A1284/U	(52°C Maximum)	(-15°C to +35°C)	(0.6°C fixed)		Copper bulb	5 ft (1.5 m)	1/2 in. x 4 3/16 in. (13 mm dia. x 106 mm long)		Celsius model
T675A1425/U	200°F Maximum (93°C Maximum)	55°F to 175°F (13°C to 79°C)	3.6°F to 12°F (2°C to 6.7°C)		Copper bulb	20 ft (6.1 m)	1/2 in. x 3 9/16 in. (13 mm x 90 mm)		
T675A1458/U	200°F Maximum (93°C Maximum)	55°F to 175°F (13°C to 79°C)	1°F fixed (0.6°C fixed)		Copper bulb	5 ft (1.5 m)	1/2 in. x 3 9/16 in. (13 mm x 90 mm)		
T675A1466/U	(93°C Maximum)	(15°C to 75°C)	(2°C to 6.6°C)		Copper bulb	5 ft (1.5 m)	1/2 in. x 3 9/16 in. (13 mm x 90 mm)		Celsius model
T675A1474/U	(93°C Maximum)	(15°C to 75°C)	(2°C to 6.6°C)		Copper bulb	20 ft (6.1 m)	1/2 in. x 3 9/16 in. (13 mm x 90 mm)		Celsius model
T675A1508/U	125°F Maximum (52°C Maximum)	0°F to 100°F (-18°C to +38°C)	3°F to 10°F (1.7°C to 5.6°C)		Copper bulb	5 ft (1.5 m)	1/2 in. x 4 3/16 in. (13 mm dia. x 106 mm long)	Tradeline	Includes 107324A Duct Bulb Holder
T675A1516/U	125°F Maximum (52°C Maximum)	0°F to 100°F (-18°C to +38°C)	1°F fixed (0.6°C fixed)		Copper bulb	5 ft (1.5 m)	1/2 in. x 4 3/16 in. (13 mm dia. x 106 mm long)	Tradeline	Includes 107324A Duct Bulb Holder
T675A1524/U	200°F Maximum (93°C Maximum)	55°F to 175°F (13°C to 79°C)	1°F fixed (0.6°C fixed)		Copper bulb	20 ft (6.1 m)	1/2 in. x 3 9/16 in. (13 mm x 90 mm)		
T675A1532/U	280°F Maximum (138°C Maximum)	160°F to 260°F (71°C to 127°C)	3°F to 10°F (1.7°C to 5.6°C)		Copper bulb	5 ft (1.5 m)	1/2 in. x 4 3/16 in. (13 mm dia. x 106 mm long)	Tradeline	Includes 107324A Duct Bulb Holder
T675A1540/U	200°F Maximum (93°C Maximum)	55°F to 175°F (13°C to 79°C)	3.6°F to 12°F (2°C to 6.7°C)		Copper bulb	5 ft (1.5 m)	1/2 in. x 3 9/16 in. (13 mm x 90 mm)	Tradeline	Includes 107324A Duct Bulb Holder
T675A1565/U	125°F Maximum (52°C Maximum)	0°F to 100°F (-18°C to +38°C)	3°F to 10°F (1.7°C to 5.6°C)		Copper bulb	20 ft (6.1 m)	1/2 in. x 4 3/16 in. (13 mm x 90 mm)	Tradeline	Includes 107324A Duct Bulb Holder
T675A1706/U	125°F Maximum (52°C Maximum)	0°F to 100°F (-18°C to +38°C)	3°F to 10°F (1.7°C to 5.6°C)		Fast response capillary	5 ft (1.5 m)	coil 1 1/2 in. diameter x 5 in. (coil 38.1 mm x 127 mm)	Tradeline	Fast response model, includes 107324A Duct Bulb Holder

Material Number	Operating Temperature Range	Setpoint Temperature Range	Differential Temperature	Interstage Differential Temperature	Sensor Element	Capillary Length	Bulb Size	Tradeline Value	Comments
T675A1722/U	200°F Maximum (93°C Maximum)	55°F to 175°F (13°C to 79°C)	3.6°F to 12°F (2°C to 6.7°C)		Fast response capillary	5 ft (1.5 m)	coil 1 1/2 in. diameter x 5 in. (coil 38.1 mm x 127 mm)	Tradeline	Fast response model, includes 107324A Duct Bulb Holder
T675A1771/U	200°F Maximum (93°C Maximum)	55°F to 175°F (13°C to 79°C)	1°F fixed (0.6°C fixed)		Fast response capillary	5 ft (1.5 m)	coil 1 1/2 in. diameter x 5 in. (coil 38.1 mm x 127 mm)		Fast response model, includes 107324A Duct Bulb Holder
T675A1805/U	125°F Maximum (52°C Maximum)	0°F to 100°F (-18°C to +38°C)	3°F to 10°F (1.7°C to 5.6°C)		Copper bulb	20 ft (6.1 m)	1/2 in. x 4 3/16 in. (13 mm dia. x 106 mm long)		
T675A1920/U	(52°C Maximum)	(-15°C to +35°C)	(1.7°C to 5.6°C)		Copper bulb	20 ft (6.1 m)	1/2 in. x 4 3/16 in. (13 mm dia. x 106 mm long)		Bi-lingual French, Celsius Model
T675A2068/U	(52°C Maximum)	(-15°C to +35°C)	(1.7°C to 5.6°C)		Copper bulb	5 ft (1.5 m)	1/2 in. x 4 3/16 in. (13 mm dia. x 106 mm long)	Tradeline	Celsius model
T675A2076/U	(52°C Maximum)	(-15°C to +35°C)	(0.6°C fixed)		Copper bulb	5 ft (1.5 m)	1/2 in. x 4 3/16 in. (13 mm dia. x 106 mm long)	Tradeline	Celsius model
T675A2084/U	(52°C Maximum)	(-15°C to +35°C)	(1.7°C to 5.6°C)		Copper bulb	20 ft (6.1 m)	1/2 in. x 4 3/16 in. (13 mm dia. x 106 mm long)	Tradeline	Celsius model
T675A2100/U	(93°C Maximum)	(15°C to 75°C)	(2°C to 6.6°C)		Copper bulb	5 ft (1.5 m)	1/2 in. x 4 3/16 in. (13 mm dia. x 106 mm long)	Tradeline	Celsius model
T675A2118/U	(52°C Maximum)	(75°C to 125°C)	(1.7°C to 5.6°C)		Copper bulb	5 ft (1.5 m)	1/2 in. x 4 3/16 in. (13 mm dia. x 106 mm long)	Tradeline	Celsius model
T675B1002/U	125°F Maximum (52°C Maximum)	30°F to 50°F (-1°C to +10°C)	Manual Reset		Copper bulb	10 ft (3 m)	1/2 in. x 4 3/16 in. (13 mm dia. x 106 mm long)		
T675B1010/U	125°F Maximum (52°C Maximum)	30°F to 50°F (-1°C to +10°C)	Manual Reset		Copper bulb	20 ft (6.1 m)	1/2 in. x 4 3/16 in. (13 mm dia. x 106 mm long)		
T675B1028/U	125°F Maximum (52°C Maximum)	-20°F to +50°F (-29°C to +10°C)	Manual Reset		Copper bulb	10 ft (3 m)	3/8 in. x 3 in. (9.5 mm dia x 76.2 mm long)		
T678A1015/U	125°F Maximum (52°C Maximum)	0°F to 100°F (-18°C to +38°C)	3°F fixed (1.7°C fixed)	1.7°C to 5.6°C adjustable (3°F to 10°F adjustable)	Copper bulb	20 ft (6.1 m)	1/2 in. x 4 3/16 in. (13 mm dia. x 106 mm long)		maximum connected load = 2000VA
T678A1155/U	(52°C Maximum)	(-15°C to +35°C)	(1.7°C)	1.7°C to 5.6°C adjustable	Copper bulb	5 ft (1.5 m)	1/2 in. x 4 3/16 in. (13 mm dia. x 106 mm long)		Bi-lingual French, Celsius Model; maximum connected load = 2000VA
T678A1163/U	(52°C Maximum)	(-15°C to +35°C)	(1.7°C fixed)	1.7°C to 5.6°C adjustable	Copper bulb	20 ft (6.1 m)	1/2 in. x 4 3/16 in. (13 mm dia. x 106 mm long)		Celsius model; maximum connected load = 2000VA
T678A1353/U	200°F Maximum (93°C Maximum)	55°F to 175°F	3.6°F (2.0°C)	2.0°C to 6.7°C (3.6°F to 12°F)	Copper bulb	5 ft (1.5 m)	1/2 in. x 3 9/16 in. (13 mm dia. x 106 mm long)		maximum connected load = 2000VA
T678A1361/U	200°F Maximum (93°C Maximum)	55°F to 175°F (13°C to 79°C)	3.6°F fixed (2.0°C fixed)	2.0°C to 6.7°C adjustable (3.6°F to 12°F adjustable)	Copper bulb	20 ft (6.1 m)	1/2 in. x 3 9/16 in. (13 mm x 90 mm)		maximum connected load = 2000VA
T678A1437/U	125°F Maximum (52°C Maximum)	0°F to 100°F (-18°C to +38°C)	3°F fixed (1.7°C fixed)	1.7°C to 5.6°C adjustable (3°F to 10°F adjustable)	Copper bulb	5 ft (1.5 m)	1/2 in. x 4 3/16 in. (13 mm dia. x 106 mm long)	Tradeline	maximum connected load = 2000VA
T678A1445/U	200°F Maximum (93°C Maximum)	55°F to 175°F (13°C to 79°C)	3.6°F fixed (2.0°C fixed)	2.0°C to 6.7°C adjustable (3.6°F to 12°F adjustable)	Copper bulb	5 ft (1.5 m)	1/2 in. x 3 9/16 in. (13 mm x 90 mm)	Tradeline	maximum connected load = 2000VA
T678A1478/U	125°F Maximum (52°C Maximum)	0°F to 100°F (-18°C to +38°C)	3°F fixed (1.7°C fixed)	1.7°C to 5.6°C adjustable (3°F to 10°F adjustable)	Fast response capillary	5 ft (1.5 m)	1/2 in. x 4 3/16 in. (13 mm dia. x 106 mm long)	Tradeline	Fast response model; maximum connected load = 2000VA
T678A1494/U	200°F Maximum (93°C Maximum)	55°F to 175°F (13°C to 79°C)	3.6°F fixed (2.0°C fixed)	2.0°C to 6.7°C adjustable (3.6°F to 12°F adjustable)	Fast response capillary	5 ft (1.5 m)	1/2 in. x 3 9/16 in. (13 mm x 90 mm)	Tradeline	Fast response model; maximum connected load = 2000VA
T678A1627/U	125°F Maximum (52°C Maximum)	0°F to 100°F (-18°C to +38°C)	3.6°F fixed (2.0°C fixed)	2.0°C to 6.7°C adjustable (3.6°F to 12°F adjustable)	Averaging capillary	10 ft (3 m)	1/2 in. x 4 3/16 in. (13 mm dia. x 106 mm long)		maximum connected load = 2000VA
T678A1692/U	(93°C Maximum)	(15°C to 75°C)	(2.0°C)	2.0°C to 6.7°C	Copper bulb	5 ft (1.5 m)	1/2 in. x 4 in. (13 mm diameter x 102 mm long)	Tradeline	Celsius model; maximum connected load = 2000VA

T675F Crop-Trol Controller

Used to control an oil burning, portable crop dryer.

- Suitable for line-voltage, low-voltage or millivolt (Powerpile) switching.
- Mounts directly on dryer with sensing bulb in discharge air duct.
- Knob extends through case for manual control point adjustment.
- Differential setting wheel, located under cover, adjusts difference between cut-in and cut-out temperatures.

Dimensions in inches (millimeters)

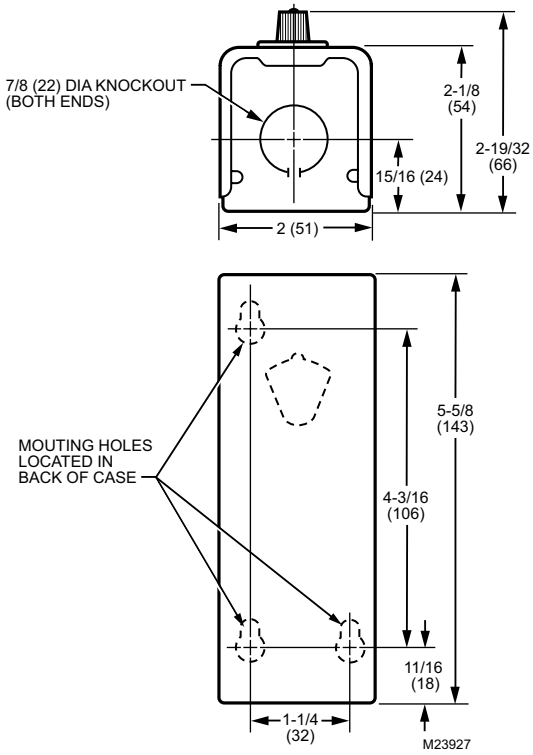

Application: Crop-trol, provides control of portable crop drying equipment.
Output: relay
Relay Outputs: 1 SPDT
Voltage: 120 Vac or 240/277 Vac
Frequency: 50 Hz; 60 Hz
Contact Ratings: 120 Vac – 8.0 AFL, 48.0 ALR; 240 Vac – 5.1 AFL, 30.6 ALR; 277 Vac – 4.2 AFL, 25.2 ALR
Approximate, Dimensions: 5 5/8 in. high x 2 in. wide x 2 5/8 in. deep (143 mm high x 51 mm wide x 67 mm deep)
Sensor Inputs: 1
Capillary Length: 10 ft 3 in (3.1 m)
Operating Temperature Range: 245°F Maximum (118°C Maximum)
Differential Temperature: 5°F to 30°F (2.8°C to 17°C)

Material Number	Description	Type	Sensor Element	Bulb Size	Setpoint Temperature Range	Approvals, Underwriters Laboratories Inc.
T675F1016/U	Remote bulb Commercial Temperature Controller, 80°F to 220°F, 10 ft. 3 in. capillary, Averaging capillary sensing element		Averaging capillary	5 ft. 3 in. (1.3 m)	80°F to 220°F	UL Listed: E4436, Vol. 6, Sec. 3, Guide XAPX
T675F1032/U	Remote bulb Commercial Temperature Controller, 80°F to 220°F, 10 ft. capillary, Copper bulb sensing element	Remote bulb	Copper bulb	3/8 in. x 3 in. (10 mm x 76 mm)	80°F to 220°F (27°C to 104°C)	Component Listed

T678C, E, F Changeover Temperature Controller

Remote bulb thermostats regulate temperature of air or liquids in ducts, pipes, tanks and boilers.

- Suitable for applications requiring temperature control of air or liquids where controller must be placed outside the sensing area.
- Typical uses include control of dampers and valves in heating, cooling and heating-cooling systems.
- Fast response models (available for use in return air duct) operate approximately four times faster than standard models.
- Controller can be mounted in any position. Ambient temperature compensation provides good temperature control.
- Refer to T775 Electronic Remote Temperature Controller where more exact control is required and/or remote controller location is preferred.
- T678 models have a maximum connected load of 2000 VA.

Application: Changeover temperature control
Type: Remote bulb
Output: relay
Relay Outputs: 2 SPDT switch contacts
Voltage: 120 Vac; 240 Vac
Frequency: 50 Hz; 60 Hz
Approximate, Dimensions: 5 5/8 in. high x 2 in. wide x 2 5/8 in. deep (143 mm high x 51 mm wide x 67 mm deep)
Sensor Inputs: 1
Sensor Element: Copper bulb

Dimensions in inches (millimeters)

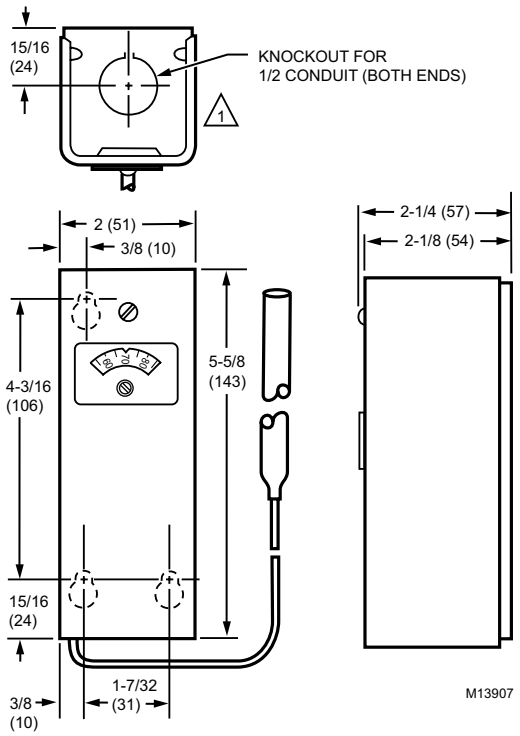

Material Number	Operating Temperature Range	Setpoint Temperature Range	Differential Temperature	Bulb Size	Capillary Length	Interstage Differential Temperature	Contact Ratings	Approvals, CSA	Comments
T678C1005/U	205°F Maximum (96°C Maximum)	55°F to 85°F (13°C to 29°C)	5°F (2.8°C)	3/8 in. x 3 in. (10 mm x 76 mm)	5 1/2 ft (1.7 m)		120 Vac – 8.0 AFL, 48.0 ALR; 240 Vac – 5.1 AFL, 30.6 ALR		
T678E1003/U	210°F Maximum (99°C Maximum)	40°F to 180°F (4°C to 82°C)	2°F (1.1°C)	1/8 in. x 42 in. (3 mm x 1064 mm)	17 ft (5.2 m)	3.9°C (7°F)	120 Vac – Control: 2.6 AFL, 15.6 ALR; Hi Limit: 7.4 AFL, 44.4 ALR; 240 Vac – Control: 1.3 AFL, 7.8 ALR; Hi Limit: 5.1 AFL, 30.6 ALR		Does not include enclosure
T678E1011/U	210°F Maximum (99°C Maximum)	50°F to 190°F	Control: 2°F; Hi Limit: 5°F (Control: 1.1°C; Hi Limit: 2.8°C)	1/8 in. x 30 in. (3 mm x 762 mm)	10 ft (3 m)	3.9°C (7°F)	120 Vac – Control: 2.6 AFL, 15.6 ALR; Hi Limit: 7.4 AFL, 44.4 ALR; 240 Vac – Control: 1.3 AFL, 7.8 ALR; Hi Limit: 5.1 AFL, 30.6 ALR		
T678F1002/U	130°F Maximum (54°C Maximum)	55°F to 85°F (13°C to 29°C)	2°F (1.1°C)	5/16 in. x 11 11/16 in. (8 mm x 297 mm)	5 1/2 ft (1.7 m)		120 Vac – 8.0 AFL, 48.0 ALR; 240 Vac – 5.1 AFL, 30.6 ALR	CSA Listed: Report-1	

T775 Series 2000 Stand-Alone Controllers

The T775 electronic remote temperature controllers are the next generation of commercial and agricultural controls capable of remote sensing of temperature and providing switched and/or proportional outputs to various types of loads.

- Save time on installations with the easy-to-use graphical Interface, large display, and the intuitive programming.
- Use the time clock scheduler or digital input to control the setback and disable output options to help save energy.
- Protect equipment from freezing or overheating on models with the modulating high or low limit control option.
- Get pinpoint control on modulating outputs by setting the integral and derivative times (PI or PID).
- Configure models with reset in a few easy steps.
- Control floating actuators with floating outputs on select models.
- Eliminate the need for a separate time delay device and protect equipment with the minimum off time option.
- Sensor 50021579-001 included with non-NEMA 4X models.
- Sensor T775-SENS-WR included with NEMA-4X models.

Application: On/off or analog controller for applications where electronic accuracy and remote sensing of temperature is required.
Voltage: 24 Vac or 120/240 Vac
Frequency: 50 Hz; 60 Hz
Relay Contact Ratings: 24 Vac – 10.0A resistive; 120 Vac – 1/2 hp; 9.8 AFL, 58.8 ALR, 125 VA Pilot Duty; 240 Vac – 1/2 hp; 4.9 AFL, 29.4 ALR, 125 VA Pilot Duty
Approximate, Dimensions: 8 5/32 in. high x 4 13/32 in. wide x 2 15/16 in. deep (207.1 mm high x 112.1 mm wide x 74 mm deep)
Sensor Element: 1097 ohms PTC at 77°F (25°C)
Maximum distance to sensor: Up to 1,000 ft (up to 304 m)
Bulb Size: 1/4 in. diameter x 2 in. long (6.35 mm diameter x 50.8 mm)
Setpoint Temperature Range: -40°F to 248°F (-40°C to 120°C)
Operating Temperature Range: Ambient – -40°F to 125°F @ 50 Hz; -40°F to 140°F @ 60 Hz (Ambient – -40°C to 52°C @ 50 Hz; -40°C to 60°C @ 60 Hz)
Accuracy: ±1°F at 77°F (±1°C at 25°C)
Throttling Range: 1°F to 150°F (0.5°C to 66°C)
Differential Temperature: 1°F to 150°F (0.5°C to 66°C)
Approvals, Canadian Underwriters Laboratories Inc.: Approved
Approvlas, Underwriters Laboratories Inc.: Approved
Approvals, CE: Approved
Approvals, C-Tick: Approved

Accessories:
107324A/U – Capillary Holder Assembly, 8 3/8 in. long
50001774-001/U – Immersion Well, stainless steel 304, 1/2 in. threading
C7031D2003/U – PT1000 Immersion Temperature Sensor, 5 in. immersion, operating range -40°F to 350°F
C7031J2009/U – PT1000 Electronic Duct Temperature Sensor, 12 ft
C7100D1001/U – PT1000 Duct Averaging Temperature Sensor, 13 in., 40°F to 150°F
C7130B1009/U – Wall mount Room Sensor

Material Number	Type	Output	Sensor Inputs	Analog Output	Relay Outputs	Sensors Included	Replaces	High/ Low Mod Limit	Approvals, Others
T775A2009/U	Standard-NEMA 1		1		1 SPDT	50021579-001 (1)	T775A1001		
T775B2016/U	Standard-NEMA 4X		2		2 SPDT	T775-SENS-WR (1)			IP65: Approved
T775B2024/U	Standard-NEMA 4X		2		4 SPDT	T775-SENS-WR (1)	T775C1009; T775D1008		IP65: Approved
T775B2032/U	Standard-NEMA 1		2		2 SPDT	50021579-001 (1)	T775A1019; T775B1000		
T775B2040/U	Standard-NEMA 1		2		4 SPDT	50021579-001 (1)	T775A1027; T775A1035; T775B1018; T775B1026; T775B1042		
T775M2006/U	Modulating-NEMA 1		2	2, Electronic Series 90; 4-20 mA; 0-10 Vdc; 2-10 Vdc	None	50021579-001 (1)			
T775M2014/U	Modulating-NEMA 4X		2	Electronic Series 90; 4-20 mA; 0-10 Vdc; 2-10 Vdc,2	4 SPDT	T775-SENS-WR (1)	T775G1005; T775G1013; T775G1021; T775G1039	Yes	IP65: Approved
T775M2022/U	Modulating-NEMA 4X		2	2, Electronic Series 90; 4-20 mA; 0-10 Vdc; 2-10 Vdc	2 SPDT	T775-SENS-WR (1)		Yes	IP65: Approved
T775M2030/U	Modulating-NEMA 1		2	2, Electronic Series 90; 4-20 mA; 0-10 Vdc; 2-10 Vdc	4 SPDT	50021579-001 (1)	T775E1114; T775F1022; T775F1055; T775F1089	Yes	IP65: Approved
T775M2048/U	Modulating-NEMA 1		2	2, Electronic Series 90; 4-20 mA; 0-10 Vdc; 2-10 Vdc	2 SPDT	50021579-001 (1)	T775E1015; T775E1023; T775E1056; T775E1064; T775E1098	Yes	
T775R2001/U	Reset option-NEMA 1	relay w/ RESET	2		4 SPDT	50021579-001 (2)			
T775R2019/U	Reset option-NEMA 1	relay w/ RESET	2	2, Electronic Series 90; 4-20 mA; 0-10 Vdc; 2-10 Vdc	4 SPDT	50021579-001 (2)			

Material Number	Type	Output	Sensor Inputs	Analog Output	Relay Outputs	Sensors Included	Replaces	High/ Low Mod Limit	Approvals, Others
T775R2027/U	Reset option-NEMA 1	relay w/ RESET	2	2, Electronic Series 90; 4-20 mA; 0-10 Vdc; 2-10 Vdc	2 SPDT	50021579-001 (2)	T775J1043; T775J1050; T775J1068		
T775R2035/U	Reset option-NEMA 1	relay w/ RESET	2		2 SPDT	50021579-001 (2)	T775J1001; T775J1076		
T775R2043/U	Reset option-NEMA 1	relay w/ RESET	2	2, Electronic Series 90; 4-20 mA; 0-10 Vdc; 2-10 Vdc		50021579-001 (2)	T775J1019; T775J1027; T775J1035	Yes	

Dimensions in inches (millimeters)

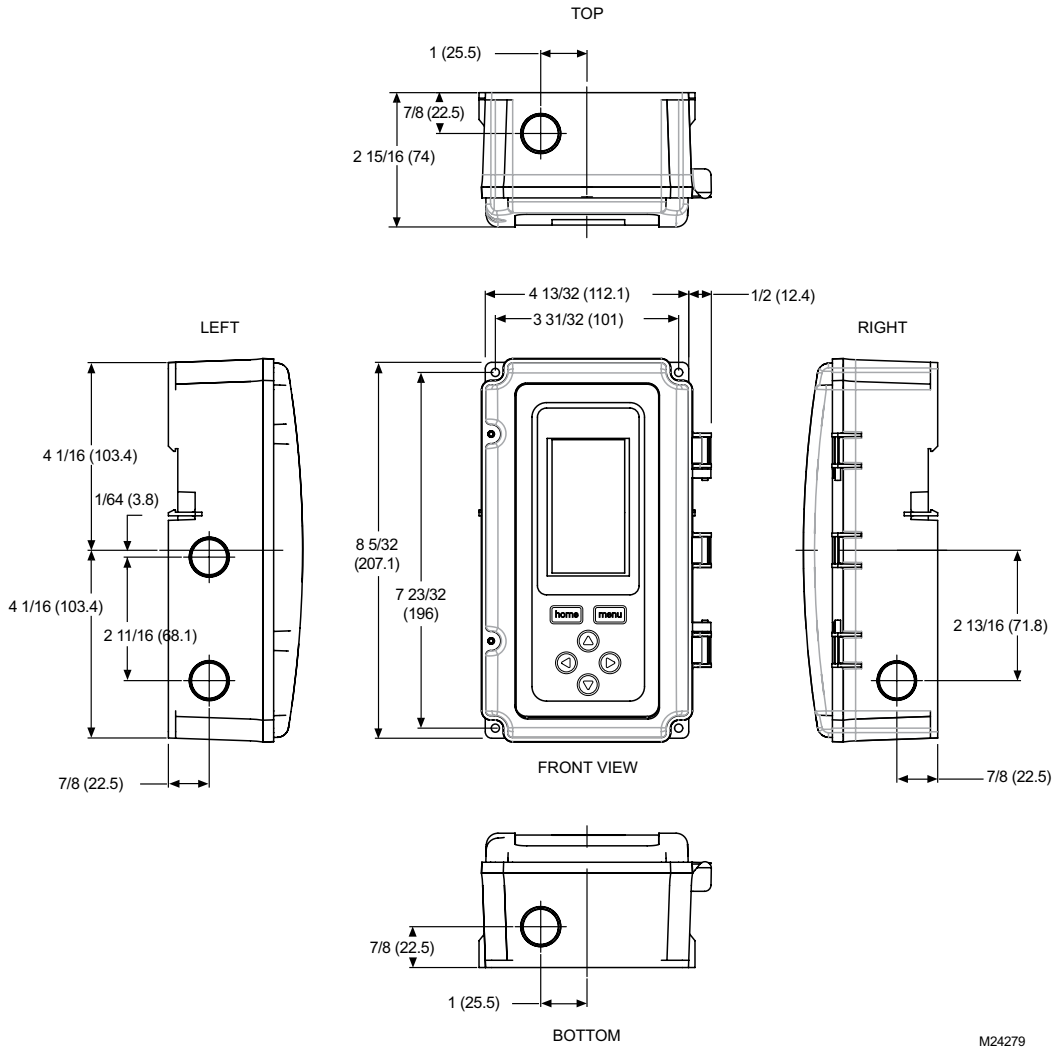

T775 Series 2000 Special Stand-Alone Controllers

T775 electronic remote temperature controller, is the next generation in commercial/agricultural control - capable of remote sensing temperature, humidity, pressure, etc., and providing switched and/or proportional outputs to various types of loads.

- Universal model (T775U) can control pressure, humidity, or any variable analog input.
- Special boiler model (T775P) for boiler control.
- Special Staged Sequencing Model (T775L) for sequence staging of relays with one or two setpoints.
- Special Expansion Model (T775S) for staging up to 12 relays with two setpoints (each T775S provides 4 relays).
- Save time on installations with the easy-to-use graphical Interface, large display, and the intuitive programming.
- Use the time clock scheduler or digital input to control the setback and disable output options to help save energy.
- Provide very fast or very fast response times on modulating outputs by adjusting the integral and derivative times (PI or PID).
- Configure models with reset in a few easy steps.
- Eliminate the need for a separate time delay device and protect equipment with the minimum off time option.
- Use the T775L and T775P to stage up to 12 relays (with optional T775S) from two independent heat or cool setpoints.
- Support for digital output alarm on the T775P configurable based on minimum, maximum, or differential temperature.

Analog Output: 4-20 mA; 0-10 Vdc; 2-10 Vdc; Electronic Series 90
Voltage: 24 Vac or 120/240 Vac
Frequency: 50 Hz; 60 Hz
Relay Contact Ratings: 24 Vac – 10.0A resistive; 120 Vac – 1/2 hp; 9.8 AFL, 58.8 ALR, 125 VA Pilot Duty; 240 Vac – 1/2 hp; 4.9 AFL, 29.4 ALR, 125 VA Pilot Duty
Approximate, Dimensions: 8 5/32 in. high x 4 13/32 in. wide x 2 15/16 in. deep (207.1 mm high x 112.1 mm wide x 74 mm deep)
Sensor Element: 1097 ohms PTC at 77°F (25°C)
Setpoint Temperature Range: -40°F to 248°F (-40°C to 120°C)
Operating Temperature Range: Ambient – -40°F to 125°F @ 50 Hz; -40°F to 140°F @ 60 Hz (Ambient – -40°C to 52°C @ 50 Hz; -40°C to 60°C @ 60 Hz)
Accuracy: ±1°F at 77°F (±1°C at 25°C)
Throttling Range: 1°F to 150°F (0.5°C to 66°C)
Differential Temperature: 1°F to 150°F (0.5°C to 66°C)
Expandable: T775L or T775P - Add 1 or 2 T775Ss (4 relays ea)
Replaces: T775U2006/U can be used to replace H775A1006; H775A1022; H775A1048; H775A1063; H775B1005; H775C1004; H775D1003; or H775E1002
Approvals, Canadian Underwriters Laboratories Inc.: Approved
Approvals, Underwriters Laboratories Inc.: Approved
Approvals, Others: IP65: Approved
Approvals, CE: Approved
Approvals, C-Tick: Approved

Accessories:
107324A/U – Capillary Holder Assembly, 8 3/8 in. long
H7655A1001/U – Wall Humidity Sensor, 5% RH, 0-10 Vdc fixed output
H7655B2014/U – Duct Humidity Sensor, 5% RH, Selectable 4-20mA or 0-5/10Vdc, with 20K ohm temp
P7640A1000/U – Panel Differential Pressure Transmitter, 0-.1", 0-.25", 0-.5", 0-1" Selectable
P7640A1018/U – Panel Differential Pressure Transmitter, 0-.1", 0-.25", 0-.5", 0-1" Selectable
P7640A1026/U – Panel Differential Pressure Transmitter, 0-1", 0-2.5", 0-5", 0-10" Selectable
P7640A1034/U – Panel Differential Pressure Transmitter, 0-1", 0-2.5", 0-5", 0-10" Selectable
P7640B1008/U – Duct Differential Pressure Transmitter,0-.1", 0-.25", 0-.5", 0-1" Selectable
P7640B1016/U – Duct Differential Pressure Transmitter, 0-.1", 0-.25", 0-.5", 0-1" Selectable
P7640B1024/U – Duct Differential Pressure Transmitter, 0-1", 0-2.5", 0-5", 0-10" Selectable
P7640B1032/U – Duct Differential Pressure Transmitter, 0-1", 0-2.5", 0-5", 0-10" Selectable

Material Number	Application	Type	Stages Loop Control	Output	Bulb Size	Relay Outputs	Sensor Included	Digital Output Alarm Ratings	Sensor Inputs
T775L2007/U	Sequence staging of relays with one or two setpoints	Stage Sequencer with Reset Option-NEMA 1	Yes	relay w/ RESET	1/4 in. diameter x 2 in. long (6.35 mm diameter x 50.8 mm)	4 SPDT	50021579-001 (1)		2 (max distance 1,000 ft [304 m])
T775P2003/U	Boiler Control	Special Boiler with Reset-NEMA 1	Yes	relay w/ RESET	1/4 in. diameter x 2 in. long (6.35 mm diameter x 50.8 mm)	4 SPDT	50021579-001 (3)	AC – 30 Vac RMS; 1.5 A steady 3A inrush P.F. 0.45 N.C.; 20 Vac RMS; 100 mA minimum load on N.O. and N.C. contacts, DC – 1 mA at 100 mV DC minimum load	3 (max distance 1,000 ft [304 m])
T775S2008/U	Staging up to 12 relays with two setpoints	Relay Expansion Module-NEMA 1				4 SPDT	None		
T775U2006/U	Control pressure, humidity, or any medium with an analog input	Universal - Humidity, Pressure, etc.-NEMA 1		relay w/ RESET		2 SPDT	None		2 (Sensor B used for reset only) (max distance 1,000 ft [304 m])
T775U2016/U	Control pressure, humidity, or any medium with an analog input	Universal - Humidity, Pressure, etc.-NEMA 1		relay w/ RESET		2 SPDT	None		2 (Control to Sensor A (Universal Input) or Sensor B (temp) Independently) (max distance 1,000 ft [304 m])

Dimensions in inches (millimeters)

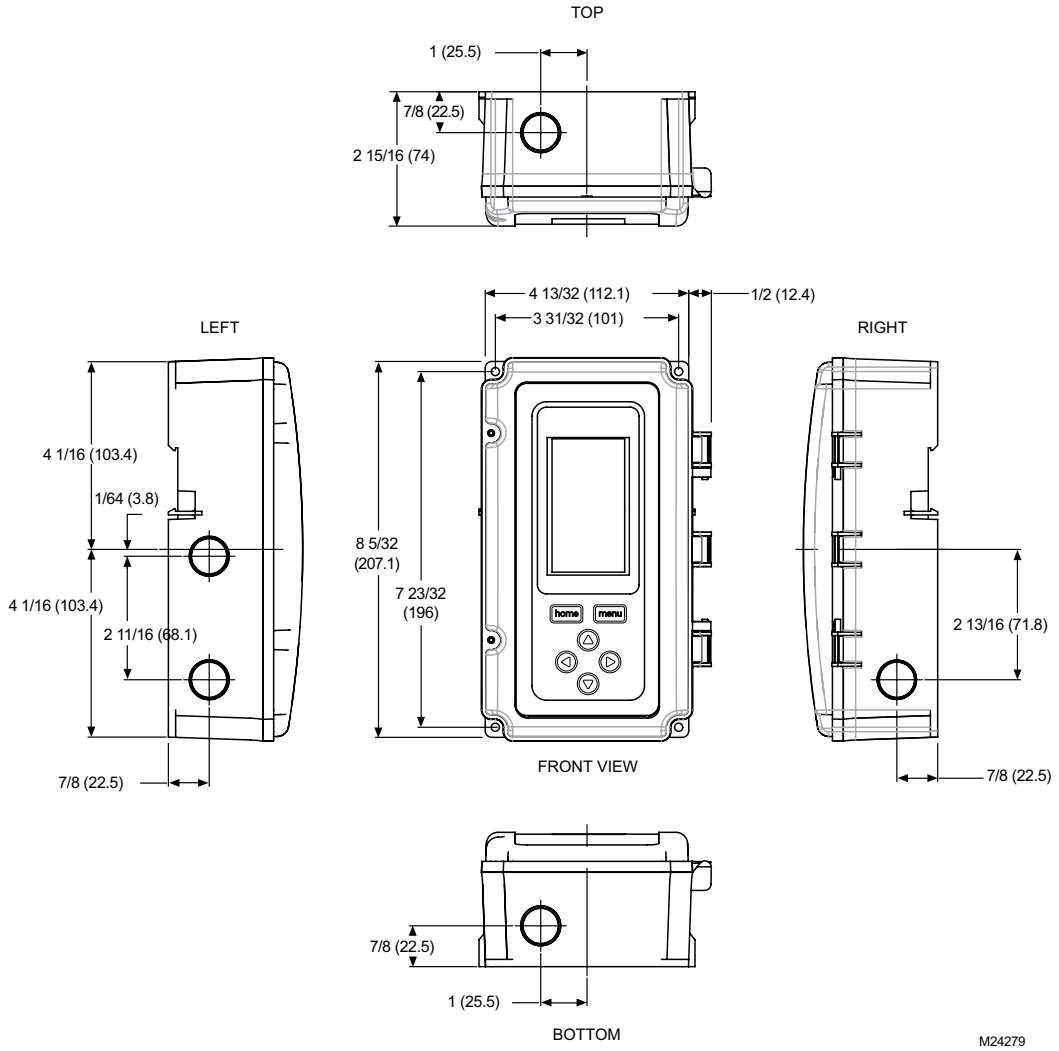

T915 Proportional Temperature Controller

Proportional (135 ohm) remote bulb controllers for ducts, tanks, boilers, pipes and other heat exchangers.

- Provide proportioning control of three-wire, low-voltage valve or damper motors.
- Used to regulate temperatures of either air or liquids.
- All models ambient compensated. Ambient temperature compensation provides good temperature control. Refer to T775 Electronic Remote Temperature Controller where more exact control is required and/or remote controller location is preferred.
- Temperature setting scale markings in both Fahrenheit and Celsius. Steel case has a clear plastic cover to make setting readily visible.
- Surface mount using two screws through back of case.

Application: Used with Series 90 Modutrol Motors for proportional control of valves and dampers
Type: Remote bulb
Output: analog
Approximate, Dimensions: 5 1/2 in. high x 4 1/2 in. wide x 2 3/4 in. deep (140 mm high x 114 mm wide x 70 mm deep)

Sensor Inputs: 1
Bulb Size: 1/2 in. diameter x 4 in. long (13 mm diameter x 102 mm long)
Color: Gray

Material Number	Setpoint Temperature Range	Operating Temperature Range	Throttling Range	Capillary Length	Analog Output	Sensor Element
T915C1407/U	15°F to 90°F (-10°C to +32°C)	200°F Maximum (93°C Maximum)	7°F to 38°F (3.9°C to 21.1°C)	20 ft (6.1 m)	One 135 Ohm Potentiometer	Copper bulb, fade-out fill
T915C1928/U	80°F to 210°F (27°C to 99°C)	230°F Maximum (110°C Maximum)	6°F to 32°F (3.3°C to 17.8°C)	5 ft (1.5 m)	One 135 Ohm Potentiometer	Copper bulb, high temperature fill
T915C1936/U	80°F to 210°F (27°C to 99°C)	230°F Maximum (110°C Maximum)	6°F to 32°F (3.3°C to 17.8°C)	20 ft (6.1 m)	One 135 Ohm Potentiometer	Copper bulb, high temperature fill

T991A Proportional Temperature Controller

Proportional (135 ohm) remote bulb controllers for modulating control of water or air temperature in ducts, tanks and similar applications.

- Fast response models (for duct mounting) have coiled sensing element giving at least four times faster response than standard models.
- Ambient temperature compensated for the case and tubing.
- Sensing element capillary tubing allows remote mounting of sensing element.
- Setpoint may be read and adjusted through cover.
- Throttling dial inside case adjusts proportional throttling range.

Dimensions in inches (millimeters)

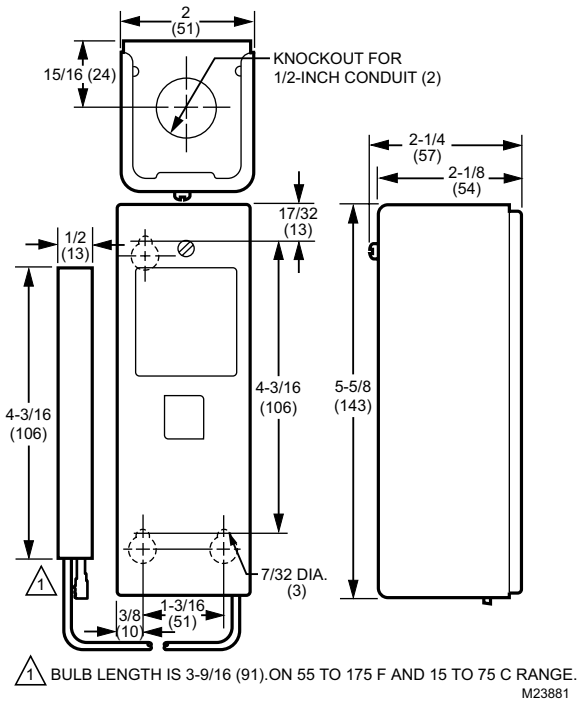

Output: analog
Voltage: 24 Vac to 30 Vac
Frequency: 50 Hz; 60 Hz
Sensor Inputs: 1
Color: Gray

Material Number	Setpoint Temperature Range	Operating Temperature Range	Throttling Range	Bulb Size	Capillary Length	Analog Output	Sensor Element	Type	Approximate, Dimensions	Includes	Comments
Provide modulating control of water or air temperature in ducts or tanks											
T991A1012/U	0°F to 100°F (-18°C to +38°C)	125°F Maximum (52°C Maximum)	3°F to 30°F (1.7°C to 16.7°C)	1/2 in. diameter x 4 3/16 in. long (13 mm diameter x 107 mm long)	20 ft (6.1 m)	One 135 Ohm Potentiometer	Copper bulb	Modulating Remote bulb	5 5/8 in. high x 2 in. wide x 2 1/4 in. deep (143 mm high x 51 mm wide x 57 mm deep)		
T991A1061/U	160°F to 260°F (71°C to 127°C)	280°F Maximum (138°C Maximum)	3°F to 30°F (1.7°C to 16.7°C)	1/2 in. diameter x 4 3/16 in. long (13 mm diameter x 107 mm long)	5 ft (1.5 m)	One 135 Ohm Potentiometer	Copper bulb	Modulating Remote bulb	5 5/8 in. high x 2 in. wide x 2 1/4 in. deep (143 mm high x 51 mm wide x 57 mm deep)		
T991A1079/U	160°F to 260°F (71°C to 127°C)	280°F Maximum (138°C Maximum)	3°F to 30°F (1.7°C to 16.7°C)	1/2 in. diameter x 4 3/16 in. long (13 mm diameter x 107 mm long)	20 ft (6.1 m)	One 135 Ohm Potentiometer	Copper bulb	Modulating Remote bulb	5 5/8 in. high x 2 in. wide x 2 1/4 in. deep (143 mm high x 51 mm wide x 57 mm deep)		
T991A1095/U	5°F to 95°F (-15°C to +35°C)	125°F Maximum (52°C Maximum)	3°F to 30°F (1.7°C to 16.7°C)	1/2 in. diameter x 4 3/16 in. long (13 mm diameter x 107 mm long)	5 ft (1.5 m)	One 135 Ohm Potentiometer	Copper bulb	Modulating Remote bulb	5 5/8 in. high x 2 in. wide x 2 1/4 in. deep (143 mm high x 51 mm wide x 57 mm deep)	Celsius scale	

Material Number	Setpoint Temperature Range	Operating Temperature Range	Throttling Range	Bulb Size	Capillary Length	Analog Output	Sensor Element	Type	Approximate, Dimensions	Includes	Comments
T991A1186/U	55°F to 175°F (13°C to 79°C)	200°F Maximum (93°C Maximum)	3°F to 30°F (1.7°C to 16.7°C)	1/2 in. diameter x 4 3/16 in. long (13 mm diameter x 107 mm long)	5 ft (1.5m)	One 135 Ohm Potentiometer	Copper bulb	Modulating Remote bulb	5 5/8 in. high x 2 in. wide x 2 1/4 in. deep (143 mm high x 51 mm wide x 57 mm deep)		
T991A1756/U	55°F to 175°F (13°C to 79°C)	200°F Maximum (93°C Maximum)	3.5°F to 36°F (1.9°C to 20°C)	1/8 in. diameter x 76 3/8 in. long (3 mm diameter x 1.9 m long)	5 ft (1.5 m)	One 135 Ohm Potentiometer	Copper fast response element	Fast response element	5 5/8 in. high x 2 in. wide x 2 1/4 in. deep (143 mm high x 51 mm wide x 57 mm deep)	131524A duct coil holder	
T991A1764/U	0°F to 100°F (-18°C to +38°C)	125°F Maximum (52°C Maximum)	3°F to 30°F (1.7°C to 16.7°C)	7/64 in. diameter x 24 ft. long (2.8 mm diameter x 7.3 m long)	24 ft (7.3 m)	One 135 Ohm Potentiometer	Copper averaging element	Averaging element	5 5/8 in. high x 2 in. wide x 2 1/4 in. deep (143 mm high x 51 mm wide x 57 mm deep)		
T991A2069/U	0°F to 100°F (-18°C to +38°C)	125°F Maximum (52°C Maximum)	3°F to 30°F (1.7°C to 16.7°C)	1/8 in. diameter x 76 3/8 in. long (3 mm diameter x 1.9 m long)	20 ft (6.1 m)	One 135 Ohm Potentiometer	Copper fast response element	Fast response element	5 5/8 in. high x 2 in. wide x 2 1/4 in. deep (143 mm high x 51 mm wide x 57 mm deep)	131524A duct coil holder	
Provide modulating control of water or air temperature in ducts or tanks, setpoint automatically reset as outdoor temperature changes											
T991A1194/U	55°F to 175°F (13°C to 79°C)	200°F Maximum (93°C Maximum)	3.5°F to 36°F (1.9°C to 20°C)	1/2 in. diameter x 3 9/16 in. long (13 mm diameter x 90 mm long)	20 ft (6.1m)	One 135 Ohm Potentiometer	Copper bulb	Modulating Remote bulb	5 5/8 in. high x 2 in. wide x 2 1/4 in. deep (143 mm high x 51 mm wide x 57 mm deep)		
T991A1210/U	59°F to 167°F (15°C to 75°C)	200°F Maximum (93°C Maximum)	3°F to 10°F (1.7°C to 16.7°C)	1/2 in. diameter x 4 3/16 in. long (13 mm diameter x 107 mm long)	5 ft (1.5m)	One 135 Ohm Potentiometer	Copper bulb	Modulating Remote bulb	5 5/8 in. high x 2 in. wide x 2 1/4 in. deep (143 mm high x 51 mm wide x 57 mm deep)		Celsius Scale
T991A1244/U	55°F to 175°F (13°C to 79°C)	200°F Maximum (93°C Maximum)	3.5°F to 36°F (1.9°C to 20°C)	1/2 in. diameter x 3 9/16 in. long (13 mm diameter x 90 mm long)	5 ft (1.5m)	One 135 Ohm Potentiometer	Copper bulb	Modulating Remote bulb	5 5/8 in. high x 2 in. wide x 2 1/4 in. deep (143 mm high x 51 mm wide x 57 mm deep)	107324A Duct Bulb holder	
T991A1269/U	55°F to 175°F (13°C to 79°C)	200°F Maximum (93°C Maximum)	3.5°F to 36°F (1.9°C to 20°C)	1/2 in. diameter x 3 9/16 in. long (13 mm diameter x 90 mm long)	20 ft (6.1m)	One 280 Ohm Potentiometer	Copper bulb	Modulating Remote bulb	5 5/8 in. high x 2 in. wide x 2 1/4 in. deep (143 mm high x 51 mm wide x 57 mm deep)		280 ohm
T991A1343/U	55°F to 175°F (13°C to 79°C)	200°F Maximum (93°C Maximum)	3.5°F to 36°F (1.9°C to 20°C)	1/2 in. diameter x 3 9/16 in. long (13 mm diameter x 90 mm long)	5 ft (1.5m)	One 280 Ohm Potentiometer	Copper bulb	Modulating Remote bulb	5 5/8 in. high x 2 in. wide x 2 1/4 in. deep (143 mm high x 51 mm wide x 57 mm deep)	107324A Duct Bulb holder	
Provides on/off and modulating control of water or air temperature in ducts or tanks											
T991A1350/U	55°F to 175°F (13°C to 79°C)	200°F Maximum (93°C Maximum)	3.5°F to 36°F (1.9°C to 20°C)	7/64 in. diameter x 24 ft. long (2.8 mm diameter x 7.3 m long)	24 ft (7.3 m)	One 135 Ohm Potentiometer	Copper averaging element	Remote bulb	5 7/8 in. high x 4 1/8 in. wide x 2 3/16 in. deep (149 mm high x 105 mm wide x 56 mm deep)		
T991A1426/U	0°F to 100°F (-18°C to +38°C)	125°F Maximum (52°C Maximum)	3°F to 10°F (1.7°C to 16.7°C)	1/2 in. diameter x 4 3/16 in. long (13 mm diameter x 107 mm long)	5 ft (1.5 m)	One 135 Ohm Potentiometer	Copper bulb	Remote bulb	5 7/8 in. high x 4 1/8 in. wide x 2 3/16 in. deep (149 mm high x 105 mm wide x 56 mm deep)	107324A Duct Bulb holder	
T991A1715/U	0°F to 100°F (-18°C to +38°C)	125°F Maximum (52°C Maximum)	3°F to 10°F (1.7°C to 16.7°C)	1/8 in. diameter x 76 3/8 in. long (3 mm diameter x 1.9 m long)	5 ft (1.5 m)	One 135 Ohm Potentiometer	Copper fast response element	Remote bulb	5 7/8 in. high x 4 1/8 in. wide x 2 3/16 in. deep (149 mm high x 105 mm wide x 56 mm deep)	131524A duct coil holder	

Remote Bulb Controller Accessories

Material Number	Description	
107323A/U	Remote Bulb Shield Assembly, 3/8 in. diameter bulbs, < 5 in. long	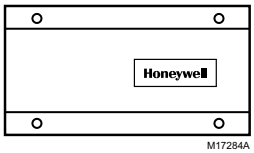 107323A
107324A/U	Capillary Holder Assembly., 8 3/8 in. long	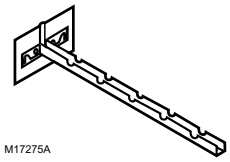 107324A
107408/U	Heat Conductive Compound, 4 ounces	
112620AA/U	Well Assembly, 3 3/4 in. (95 mm) insertion, 3/8 in. (10 mm) diameter, copper 1/2 in. NPT, used with T675 and T678	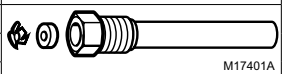
112622AA/U	Well Assembly, 4 in. (102 mm) insertion, 1/2 in. (13 mm) diameter, copper 1/2 in. NPT, used with T675 and T678	
112624AA/U	Well Assembly, 4 3/4 in. (121 mm) insertion, 1/2 in. (13 mm) diameter, stainless steel 1/2 in. NPT, used with T675 and T678	
112630AA/U	Well Assembly, 4 1/4 in. (108 mm) insertion, 1/2 in. (13 mm) diameter, copper 3/4 in. NPT, used with T675 and T678	
131524A/U	Capillary Holder Assembly, 8 3/8 in. long, duct insertion	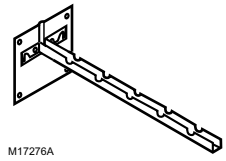 131524A
193987GA/U	Encapsulated platinum sensing element used with the T7075 and T775. 2 5/8 in. long, 3/8 in. diameter, 6 in. leads. Use with the T775 Series 1000 Only.	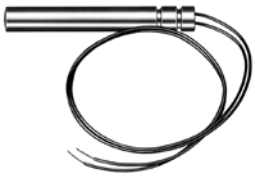
198212CA/U	Encapsulated platinum sensing element used with the T7075 and T775. Water resistant, 60 in. leads. Use with the T775 Series 1000 Only.	
203401B/U	Encapsulated platinum PT3000 sensing element used with the T7075 and T775. Water tight, 20 in. leads, requires 1/2 in. diameter well. Use with the T775 Series 1000 Only.	
311266D/U	Bulb Holder Assembly, T4031, use with copper elements only	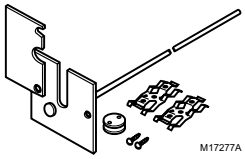 311266D
7617M/U	Compression Fitting, brass 1/2 in. NPT plug	
Q615A1004/U	Splash proof enclosure, for use with T675, T678, T991.	

Remote Bulb Controller Parts

Material Number	Description
112719/U	Packing Ring, Remote Bulb Well
124186/U	Knob, T675/T678
34886A/U	Sun shield for remote bulb controllers, T475, T991B, T678B, T675A
7617ABY/U	Compression Fitting, brass 1/2 in. NPT plug for direct immersion applications
801737A/U	Potentiometer and Bracket Assembly, T991, 140 ohms

D1 Series Ultra-low Leakage Design Airfoil Control Damper

The D1 series control damper is an ultra-low leakage damper, with rugged steel airfoil blades designed to meet the highest standards established. It is leakage and pressure drop tested according to the AMCA 500D standard, and meets leakage Class 1 and Class 1A, which also qualifies the damper for the International Energy Conservation Code (IECC). It is intended for application in medium to high pressure and velocity systems.

The ratings shown are based on tests and procedures performed in accordance with AMCA Publication 511 and comply with the requirements of the AMCA Certified Ratings Programs, (applies to air performance ratings only).

Size Range[1]:
Minimum Size:
One Blade – 6 in. wide by 6 in. high
Two Blade – 6 in. wide by 10 in. high
Maximum Size:
Single Section – 60 in. wide by 74 in. high
Multiple Section – unlimited
Temperature Rating: 180°F (82°C) maximum[2]
Maximum Pressure: 10 in. wg.
Standard Construction:
Blades: 14 gauge galvanized steel, airfoil shaped
Blade Action: Parallel or Opposed
Frame[3]: 16 gauge galvanized steel Hat-channel
Blade Axle Bearings[3]: Synthetic (Delrin™)
Internal Linkage: Steel, out of airstream (concealed in frame)
Axles[3]: 1/2 in. plated steel
Jamb Seals[3]: 304 Stainless Steel
Blade Edge Seals[3]: TPE

[1] Width and height dimensions furnished 1/4 in. undersized - standard
[2] Temperature rating with standard options (up to 250°F custom)
[3] Customized options are available

Dimensions Diagram

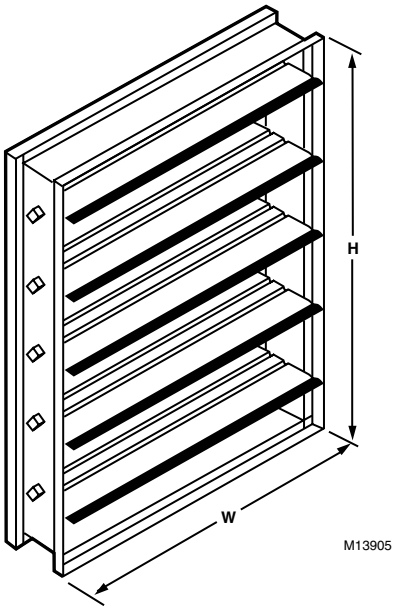

Leakage Rate

Leakage Class Definitions

The maximum allowable leakage is defined by AMCA as the following:

- Leakage Class 1A:
  - 3 cfm/ft² @ 1 in. wg (Class 1A is only defined at 1 in. wg).
- Leakage Class 1:
  - 4 cfm/ft² @ 1 in. wg.
  - 8 cfm/ft² @ 4 in. wg.
  - 11 cfm/ft² @ 8 in. wg.
  - 12.6 cfm/ft² @ 10 in. wg.

Performance Data

D1 Velocity Limits.	
Damper Size in inches.	**Maximum System Velocity**
12 x 12	4000 fpm
24 x 24	4000 fpm
36 x 36	3500 fpm
48 x 48	3000 fpm
60 x 60	2500 fpm

Flange Options

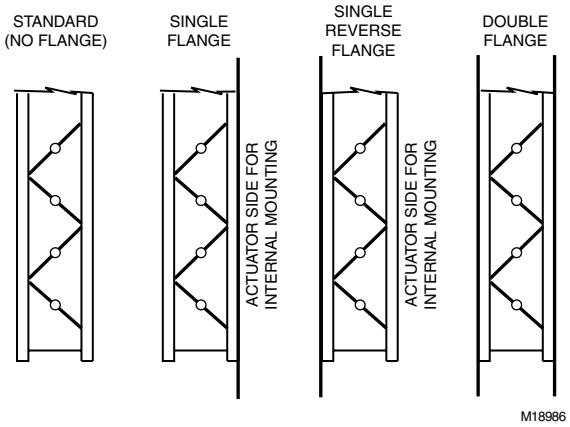

D2 and D3 Series Rectangular Volume Control Dampers

The D2 series control damper is an ultra-low leakage damper, with strong 3V blades. It is leakage and pressure drop tested according to the AMCA 500D standard, and meets leakage Class 1 and Class 1A, which also qualifies the damper for the International Energy Conservation Code (IECC). The D3 series features the same blades and hardware as the D2 damper, but lacks the seals, making it a damper intended for applications where low leakage performance is not necessary. D2 and D3 dampers are intended for application in low to medium pressure and velocity systems.

The ratings shown are based on tests and procedures performed in accordance with AMCA Publication 511 and comply with the requirements of the AMCA Certified Ratings Programs, (applies to air performance ratings only).

Size Range[1]:
Minimum Size:
One Blade – 6 in. wide by 6 in. high
Two Blade – 6 in. wide by 10 in. high
Maximum Size:
Single Section – 60 in. wide by 74 in. high
Multiple Section – unlimited
Temperature Rating: 180°F (82°C) maximum[2]
Maximum Pressure: 5 in. wg.
Standard Construction:
Blades: 16 gauge galvanized steel, 3V shaped
Blade Action: Parallel or Opposed
Frame[3]: 16 gauge galvanized steel Hat-channel
Blade Axle Bearings[3]: Synthetic (Delrin™)
Internal Linkage: Steel, out of airstream (concealed in frame)
Axles[3]: 1/2 in. plated steel
Jamb Seals[3]: 304 Stainless Steel
Blade Edge Seals[3]: TPE (D2 only)

[1] Width and height dimensions furnished 1/4 in. undersized - standard
[2] Temperature rating with standard options (up to 250°F custom)
[3] Customized options are available

Dimensions Diagram

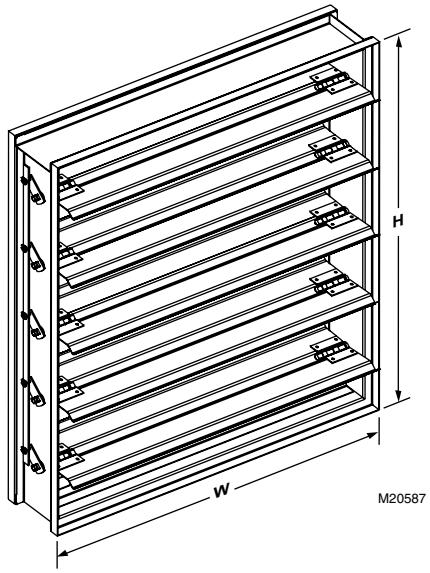

Leakage Rate (Applies to D2 only)

Leakage Class Definitions

The maximum allowable leakage is defined by AMCA as the following:
- Leakage Class 1A:
  – 3 cfm/ft^2 @ 1 in. wg (Class 1A is only defined at 1 in. wg).
- Leakage Class 1:
  – 4 cfm/ft^2 @ 1 in. wg.
  – 8 cfm/ft^2 @ 4 in. wg.

Performance Data

D2, D3 Velocity Limits.	
Damper Size in inches.	**Maximum System Velocity**
12 x 12	3000 fpm
24 x 24	3000 fpm
36 x 36	2500 fpm
48 x 48	2000 fpm

Flange Options

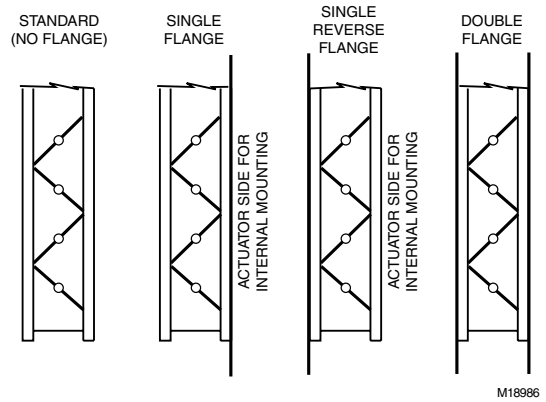

Standard Models

D1	Class 1/1A leakage, Airfoil blades with seals	**Damper Type**
D2	Class 1/1A leakage, 3V blades with seals	
D3	No leakage rating, 3V blades without seals	
P	Parallel blades	**Blade Action**
O	Opposed blades	
A	16 gauge galvanized frame (with galvanized linkage and axles)	**Frame**
A	Synthetic bearings/No blade seals	**Seal selection for D1 and D2 dampers only**
B	Synthetic bearings/TPE blade seals and 304SS jamb seals	
C	Bronze bearings/No blade seals	
D	Bronze bearings/TPE blade seals and 304SS jamb seals	
006 to 144	Standard Rectangular Damper Width	**2 inch increments through 46 inch, then 4 inch increments.**
006 to 144	Standard Rectangular Damper Height	
N	Nominal Sizing	**1/4 inch undersized in Width and Height.**
A	No flange	**Flange options are custom (see below)**
A	External Left actuator mount	**Actuator mount. External mount is extension pin, or jack-shaft for larger sizes. Internal mount requires additional hardware.**
B	Internal actuator mount	
C	External Right actuator mount	

D2	**O**	**A**	**B**	**048**	**048**	**N**	**A**	**A**	Example

Contact Customer Care, or download the damper pricing tool (available at https://customer.honeywell.com, see “estimating tools”) for additional options, features, and models.

Options

				Material		**Frame Gauge**		**Blade Seals**		**Jamb Seals**	**Blade Axle Bearings**		**Axles**		**Linkage Material**		**Flange**	
S = Standard O = Optional	**Leakage @ 1 in. wg cfm/ft2**	**Max Velocity fpm**	**Max pressure in wg**	**Galvanized**	**Stainless**	**16**	**12**	**TPE**	**Silicone**	**Stainless**	**Synthetic**	**Bronze, Stainless**	**Galvanized**	**Stainless**	**Galvanized**	**Stainless**	**None**	**Single, Double, Reverse**
D1 Ultra-low Leakage	3	4000	10	S	O	S	O	S	O	S	S	O	S	O	S	O	S	O
D2 Ultra-low Leakage	3	3000	5	S	O	S	O	S	O	S	S	O	S	O	S	O	S	O
D3 Volume Control	120	3000	5	S	O	S	O	N/A	N/A	N/A	S	O	S	O	S	O	S	O

D690 Low-Leakage, Single-Blade, Round Dampers

The D690 Round Control Damper is used in commercial air handling system zone applications to control airflow, but is also suitable for residential zoning applications where the ML6161 actuator is used. The damper is designed for use with all low torque Honeywell Direct Coupled Actuators.

- Neoprene seal for tight closing and low leakage.
- Oilite bearings for long life.

Dimensions in inches (millimeters)

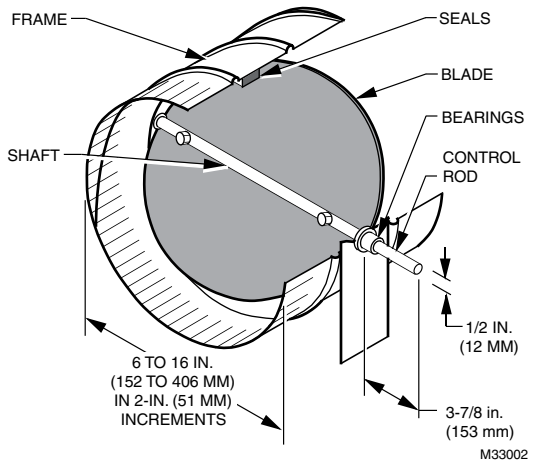

Application: Heating, cooling, ventilating
Damper Type: Single-blade, round
Used With: Honeywell direct coupled actuators up to 44 lb-in.
Temperature Range: 32°F to 130°F (0°C to 54°C)
Tradeline Value: Tradeline

Material Number	Size	Maximum Approach Velocity (ft/ min)	Input Signal	Description
D690A1002/U	6 in. diameter (152 mm diameter)	2500 ft/min	None	6 inch, Single Blade Round Damper, for use with all low torque Honeywell Direct Coupled Actuators
D690A1010/U	8 in. diameter (203 mm diameter)	2500 ft/min	None	8 inch, Single Blade Round Damper, for use with all low torque Honeywell Direct Coupled Actuators
D690A1028/U	10 in. diameter (254 mm diameter)	2500 ft/min	None	10 inch, Single Blade Round Damper, for use with all low torque Honeywell Direct Coupled Actuators
D690A1036/U	12 in. diameter (305 mm diameter)	2500 ft/min	None	12 inch, Single Blade Round Damper, for use with all low torque Honeywell Direct Coupled Actuators
D690A1044/U	14 in. diameter (356 mm diameter)	2500 ft/min	None	14 inch, Single Blade Round Damper, for use with all low torque Honeywell Direct Coupled Actuators
D690A1051/U	16 in. diameter (406 mm diameter)	2500 ft/min	None	16 inch, Single Blade Round Damper, for use with all low torque Honeywell Direct Coupled Actuators

DM7600 Commercial Zone Damper

The DM7600 Commercial Zone Damper is used in zoning systems to control airflow. The damper consists of a D690 Control damper, and a Honeywell floating ML6161 or modulating ML7161 actuator that is factory mounted to simplify field installation.

- Neoprene seal for tight closing and low leakage.
- Oilite bearings for long life.

Dimensions in inches (millimeters)

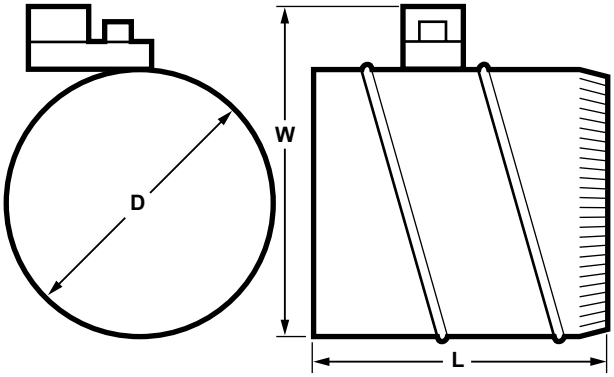

DAMPER DIAMETER (D)		WIDTH (W)		LENGTH (L)	
in.	mm	in.	mm	in.	mm
6	152	9-1/2	241	12	305
8	203	11-1/2	292	12	305
10	254	13-1/2	343	12	305
12	305	15-1/2	394	13	330
14	356	17-1/2	445	15	381
16	406	19-1/2	495	17	432

M17412

Application: Heating, cooling, ventilating
Damper Type: Single-blade, round
Voltage: 24 Vac
Frequency: 50 Hz; 60 Hz
Temperature Range: 32°F to 130°F (0°C to 54°C)

Material Number	Size	Maximum Approach Velocity (ft/ min)	Actuator Control Signal	Includes
DM7600A1005/U	6 in. diameter (152 mm diameter)	2500 ft/min	2 to 10 Vdc or 4 to 20 mA	Integral actuator ML7161A2008
DM7600A1013/U	8 in. diameter (203 mm diameter)	2500 ft/min	2 to 10 Vdc or 4 to 20 mA	Integral actuator ML7161A2008
DM7600A1021/U	10 in. diameter (254 mm diameter)	2500 ft/min	2 to 10 Vdc or 4 to 20 mA	Integral actuator ML7161A2008
DM7600A1039/U	12 in. diameter (305 mm diameter)	2500 ft/min	2 to 10 Vdc or 4 to 20 mA	Integral actuator ML7161A2008
DM7600A1047/U	14 in. diameter (356 mm diameter)	2500 ft/min	2 to 10 Vdc or 4 to 20 mA	Integral actuator ML7161A2008
DM7600A1054/U	16 in. diameter (406 mm diameter)	2500 ft/min	2 to 10 Vdc or 4 to 20 mA	Integral actuator ML7161A2008
DM7600B1004/U	6 in. diameter (152 mm diameter)	2500 ft/min	SPDT Floating	Integral actuator ML6161A2009
DM7600B1012/U	8 in. diameter (203 mm diameter)	2500 ft/min	SPDT Floating	Integral actuator ML6161A2009
DM7600B1020/U	10 in. diameter (254 mm diameter)	2500 ft/min	SPDT Floating	Integral actuator ML6161A2009
DM7600B1038/U	12 in. diameter (305 mm diameter)	2500 ft/min	SPDT Floating	Integral actuator ML6161A2009
DM7600B1046/U	14 in. diameter (356 mm diameter)	2500 ft/min	SPDT Floating	Integral actuator ML6161A2009
DM7600B1053/U	16 in. diameter (406 mm diameter)	2500 ft/min	SPDT Floating	Integral actuator ML6161A2009

ML6161; ML7161
Non-Spring Return Direct Coupled Damper Actuators, 35 lb-in.

Used to control dampers in HVAC applications and for mounting on ball valves; suitable for use with modulating (2-10 Vdc) thermostats or building automation controls.

- Control for air damper applications with up to 10 sq. ft. assuming 3.5 lb-in. per sq. ft. of damper area, velocity independent
- Superior A/C synchronous submotor for consistent timing and actuator longevity
- Eliminate need for limit switches or mechanical stops by providing magnetic coupling
- All models include manual declutch lever, and bag assembly with two minimum position setscrews
- Mount directly on 3/8 inch or 1/2 inch square or round damper shaft
- Selectable 45, 60, and 90 stroke in either clockwise or counterclockwise direction

Application: HVAC
Actuator Type: Damper
Frequency: 50 Hz; 60 Hz
Fail Safe Mode: Non-Spring Return
Torque Rating (lb-in.): 35 lb-in.
Torque Rating (Nm): 4 Nm
Additional Torque Ratings (lb-in.): Maximum Stall – 70 lb-in.
Additional Torque Ratings (Nm): Maximum Stall – 8 Nm
Internal Auxiliary Switch: 0
Rotation to Open: ML6161 - By wiring; ML7161 - By switch
Rotational Stroke Adjustment: Mechanically limited at 45 or 60 degrees in CW or CCW directions
Stroke: 90 degrees
Electrical Connections: Screw terminals
Mounting: Direct Coupled
Environmental, Electrical, or Ingress Protection Rating: NEMA 1
Materials: Steel plate and Plenum rated plastic

Maximum Noise Rating: Driving (dB(A) @ 1m) – 45
Shaft Adapter Type: Aluminum Hub, two set screws
Manual operation: Declutch mechanism
Shaft Dimensions: 3/8 to 1/2 in. square or round (10 to 13 mm square/round)
Ambient Temperature Range: 20°F to 125°F (-18°C to +50°C)
Shipping and Storage Temperature Range: 20°F to 130°F (-18°C to +54°C)
Approvals, Canadian Underwriters Laboratories Inc.: cUL C22.2 No. 24-93
Approvals, C-Tick: N314
Approvals, Underwriters Laboratories Inc.: UL873, Plenum Rated
Approvals, CE: 89/336/ECC, 73/23/EEC
Operating Humidity Range (% RH): 5 to 95% RH, non-condensing
Includes: 4074ENY Bag Assembly
Supply Voltage: 24 Vac ±20%

Material Number	Control Signal	Power Consumption	Timing, Nominal	Feedback	Input Impedance	Weight	Comments
ML6161A2009/U	Floating; SPDT; On/Off	Driving – 1.8 VA	Driving @ 60 Hz – 90 sec	With accessory		1.5 lb (0.68 kg)	
ML6161A2017/U	Floating; SPDT; On/Off	Driving – 1.8 VA	Driving @ 60 Hz – 420 sec	With accessory		1.5 lb (0.68 kg)	
ML6161A2025/U	Floating; SPDT; On/Off	Driving – 1.8 VA	Driving @ 60 Hz – 180 sec	With accessory		1.5 lb (0.68 kg)	
ML6161B2024/U	Floating; SPDT; On/Off	Driving – 1.8 VA	Driving @ 60 Hz – 90 sec			1.5 lb (0.68 kg)	
ML6161B2032/U	Floating; SPDT; On/Off	Driving – 1.8 VA	Driving @ 60 Hz – 420 sec			1.5 lb (0.68 kg)	
ML6161B2073/U	Floating; SPDT; On/Off	Driving – 1.8 VA	Driving @ 60 Hz – 180 sec			1.5 lb (0.68 kg)	
ML6161C2007/U	Floating; SPDT; On/Off	Driving – 1.8 VA	Driving @ 60 Hz – 90 sec	With accessory		2 lb (0.91 kg)	Includes two 5/8 x 7/8 in. double knock-out conduit openings
ML6161D2006/U	Floating; SPDT; On/Off	Driving – 1.8 VA	Driving @ 60 Hz – 90 sec			2 lb (0.91 kg)	Includes two 5/8 x 7/8 in. double knock-out conduit openings
ML7161A2008/U	2-10 Vdc; 4-20 mA	Driving – 5.4 VA	Driving @ 60 Hz – 90 sec		45K ohm (2-10 Vdc signal), 536 ohm (4-20 mA signal)	2.4 lb (1.1 kg)	

ML6161A, B or ML6174A, B Dimensions in inches (millimeters)

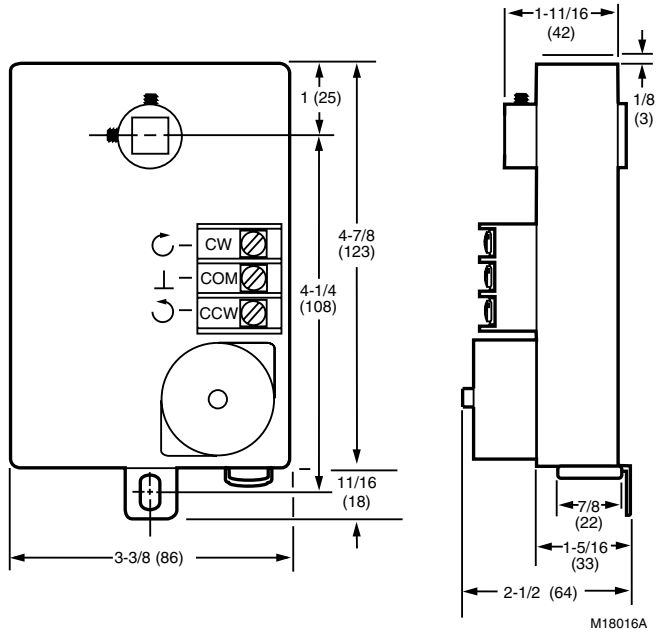

ML6161A, B or ML6174A, B Dimensions in inches (millimeters)

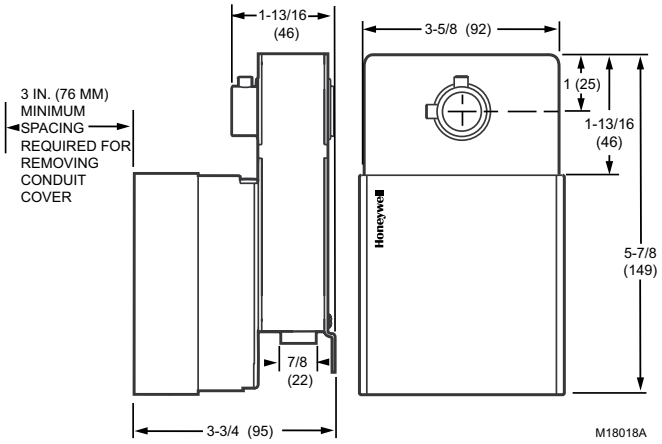

ML6161A, B or ML6174A, B Dimensions in inches (millimeters)

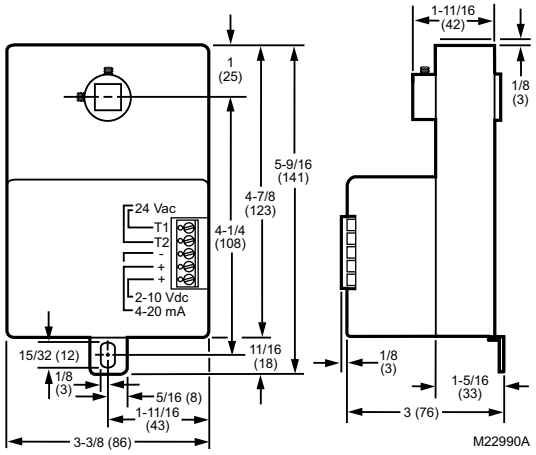

ML6174; ML7174, Non-Spring Return Direct Coupled Damper Actuators, 70 lb-in.

Used to control dampers in HVAC applications and for mounting on ball valves; suitable for use with modulating (2-10 Vdc) thermostats or building automation controls.

- Control for air damper applications with up to 20 sq. ft. assuming 3.5 lb-in. per sq. ft. of damper area, velocity independent
- Magnetic coupling eliminates the need for mechanical stops or limit switch adjustments by limiting stall torque to 130 lb-in. maximum
- Mount directly on 3/8 to 1/2 in. round and square damper shafts
- All models include manual declutch lever for ease of mounting, and bag assembly with two minimum position setscrews
- 90 second timing models are suitable for use with pressure independent VAV systems
- Selectable 45, 60, and 90 degree stroke in either clockwise or counterclockwise direction

Application: HVAC
Actuator Type: Damper
Frequency: 50 Hz; 60 Hz
Fail Safe Mode: Non-Spring Return
Torque Rating (lb-in.): 70 lb-in.
Torque Rating (Nm): 8 Nm
Additional Torque Ratings (lb-in.): Maximum Stall – 130 lb-in.
Additional Torque Ratings (Nm): Maximum Stall – 15 Nm
Internal Auxiliary Switch: 0
Rotation to Open: ML6174 - By wiring; ML7174 - By switch
Rotational Stroke Adjustment: Mechanically limited at 45 or 60 degrees in CW or CCW directions
Stroke: 90 degrees
Electrical Connections: Screw Terminals
Mounting: Direct Coupled
Environmental, Electrical, or Ingress Protection Rating: NEMA 1

Materials: Steel plate and Plenum rated plastic
Maximum Noise Rating: Driving (dB(A) @ 1m) – 45
Shaft Adapter Type: Aluminum Hub, two set screws
Manual operation: Declutch mechanism
Shaft Dimensions: 3/8 to 1/2 in. square or round (10 to 13 mm square/round)
Ambient Temperature Range: 20°F to 125°F (-18°C to +50°C)
Shipping and Storage Temperature Range: 20°F to 130°F (-18°C to +54°C)
Approvals, Canadian Underwriters Laboratories Inc.: cUL C22.2 No. 24-93
Approvals, Underwriters Laboratories Inc.: UL873, Plenum Rated
Operating Humidity Range (% RH): 5 to 95% RH, non-condensing
Includes: 4074ENY Bag Assembly
Supply Voltage: 24 Vac ±20%

Material Number	Control Signal	Power Consumption	Timing, Nominal	Feedback	Input Impedance	Weight	Comments
ML6174A2002/U	Floating; SPDT; On/Off	Driving – 2.4 VA	Driving @ 60 Hz – 90 sec	With accessory		1.5 lb (0.68 kg)	
ML6174A2010/U	Floating; SPDT; On/Off	Driving – 2.4 VA	Driving @ 60 Hz – 180 sec	With accessory		1.5 lb (0.68 kg)	
ML6174B2019/U	Floating; SPDT; On/Off	Driving – 2.4 VA	Driving @ 60 Hz – 90 sec			1.5 lb (0.68 kg)	
ML6174D2009/U	Floating; SPDT; On/Off	Driving – 2.4 VA	Driving @ 60 Hz – 90 sec			2 lb (0.91 kg)	Includes two 5/8 x 7/8 in. double knock-out conduit openings
ML7174A2001/U	2-10 Vdc; 4-20 mA	Driving – 5.4 VA	Driving @ 60 Hz – 90 sec		45K ohm (2-10 Vdc signal), 536 ohm (4-20 mA signal)	2.4 lb (1.1 kg)	

Dimensions in inches (millimeters)

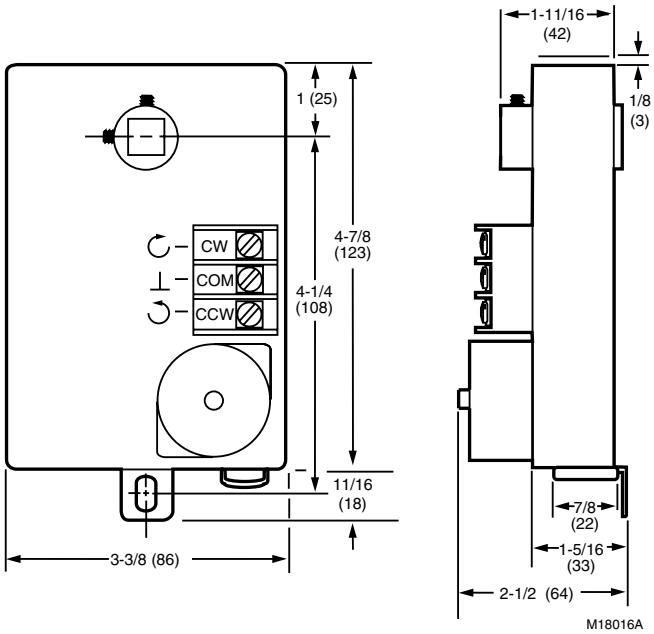

Dimensions in inches (millimeters)

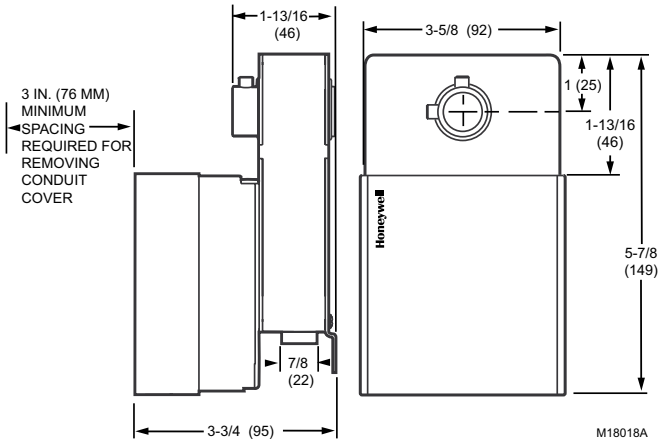

Dimensions in inches (millimeters)

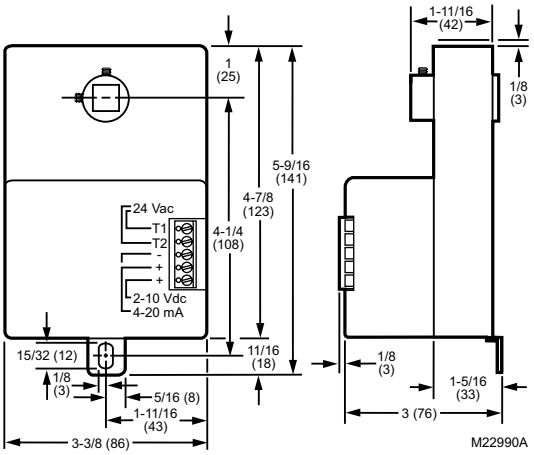

N05 Series: MN6105; MN7505
Non-Spring Return Direct Coupled Actuator, 44 lb-in.

MN6105, MN7505 44 lb-in. (5 Nm), non-spring return, direct coupled, low voltage actuators that accepts adjustable modulating (0/2-10 Vdc) or on/off (SPDT) control are used within heating, ventilating, and air-conditioning (HVAC) systems. They can drive a variety of quarter-turn, final control elements for: air dampers, air handling units, ventilation flaps, louvers, and ball valves. The W model includes a 3-foot whip.

- Declutch for manual adjustment
- Adjustable mechanical end limits
- Removable access cover for direct wiring
- Mountable in any orientation
- Function selection switch for selecting modulating or floating/ 2-position control
- Models available with three-foot, 18 AWG color-coded cable

Dimensions in inches (millimeters)

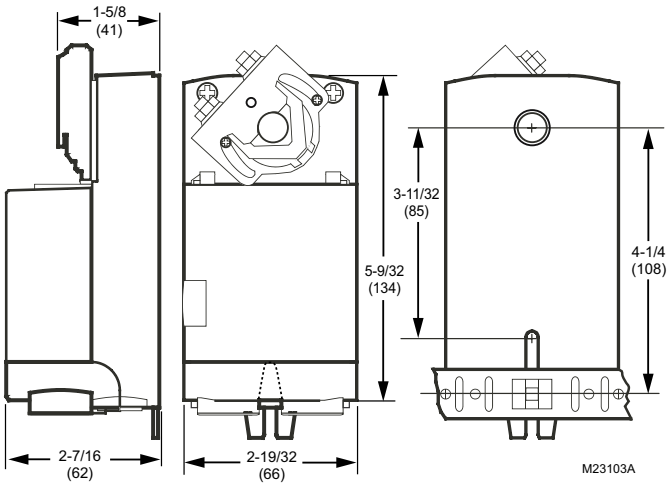

Application: HVAC
Actuator Type: Damper; Valve
Frequency: 50 Hz; 60 Hz
Fail Safe Mode: Non-Spring Return
Torque Rating (lb-in.): 44 lb-in.
Torque Rating (Nm): 5 Nm
Additional Torque Ratings (lb-in.): Maximum Stall – 70 lb-in.
Additional Torque Ratings (Nm): Maximum Stall – 8 Nm
Rotation to Open: By switch
Rotational Stroke Adjustment: Dual Integral Adj. Stops (3 degree increments)
Stroke: 95 ±3 degrees
Mounting: Direct Coupled
Environmental, Electrical, or Ingress Protection Rating: NEMA 2; IP54
Materials: Plenum rated plastic housing
Maximum Noise Rating: Driving (dB(A) @ 1m) – 35
Shaft Adapter Type: U-bolt clamp
Manual operation: Declutch mechanism (3 degree increments)
Shaft Dimensions: 1/4 to 1/2 in. square or 3/8 to 5/8 in. round (6 to 13 mm square or 8 to 16 mm round)
Weight: 1 lb (0.45 kg)
Approximate, Dimensions: 5.23 in. high x 2.60 in. wide x 2.44 in. deep (134 mm high x 66 mm wide x 62 mm deep.)
Ambient Temperature Range: -5°F to +140°F (-20°C to +60°C)
Shipping and Storage Temperature Range: -22°F to +176°F (-30°C to +80°C)
Approvals, Canadian Underwriters Laboratories Inc.: cUL C22.2 No. 24-93
Approvals, C-Tick: N314
Approvals, Underwriters Laboratories Inc.: UL873, Plenum Rated
Approvals, CE: 89/336/ECC, 73/23/EEC
Operating Humidity Range (% RH): 5 to 95% RH, non-condensing
Includes: Mounting bracket, screws, shaft adapter, water-tight strain-relief cable fittings
Comments: Integral 1/2 in. NPSM conduit connection.
Tradeline Value: Tradeline
Supply Voltage: 24 Vac +20%, -15%; 24 Vdc

Material Number	Control Signal	Feedback	Timing, Nominal	Switch Ratings	Power Consumption	Cable	Electrical Connections	Electrical Connections Size	Internal Auxiliary Switch
MN6105A1011/U	Floating; SPDT; On/Off		Driving @ 60 Hz – 95 sec		Driving – 5 VA		Enclosed screw terminal strip (22 to 14 AWG)		0
MN6105A1201/U	Floating; SPDT; On/Off		Driving @ 60 Hz – 95 sec	30 Vdc max., 3 A Class II	Driving – 5 VA		Enclosed screw terminal strip (22 to 14 AWG)		2
MN6105W1011/U	Floating; SPDT; On/Off		Driving @ 60 Hz – 95 sec		Driving – 5 VA	Threaded conduit connector	18 AWG color-coded cable	36 in. (0.9 m)	0
MN7505A2001/U	Floating; SPDT; On/Off; (0) 2-10 Vdc (4-20 mA w/500 ohm resistor)	(0) 2-10 Vdc (max. output: ±1.0 mA)	Driving @ 60 Hz – 95 sec		Driving – 5 VA		Enclosed screw terminal strip (22 to 14 AWG)		0
MN7505A2209/U	Floating; SPDT; On/Off; (0) 2-10 Vdc (4-20 mA w/500 ohm resistor)	(0) 2-10 Vdc (max. output: ±1.0 mA)	Driving @ 60 Hz – 95 sec	30 Vdc max., 3 A Class II	Driving – 5 VA		Enclosed screw terminal strip (22 to 14 AWG)		2
MN7505W2001/U	Floating; SPDT; On/Off; (0) 2-10 Vdc (4-20 mA w/500 ohm resistor)	(0) 2-10 Vdc (max. output: ±1.0 mA)	Driving @ 60 Hz – 95 sec		Driving – 5 VA	Threaded conduit connector	18 AWG color-coded cable	36 in. (0.9 m)	0

N10 Series: MN6110; MN7510
Non-Spring Return Direct Coupled Actuator, 88 lb-in.

MN6110, MN7510 88 lb-in. (10 Nm), non-spring return, direct-coupled, low voltage actuators that accepts adjustable modulating (0/2-10 Vdc) or on/off (SPDT) control are used within heating, ventilating, and air-conditioning (HVAC) systems. They can drive a variety of quarter-turn, final control elements for: air dampers, air handling units, ventilation flaps, louvers, and ball valves.

- Declutch for manual adjustment
- Adjustable mechanical end limits
- Removable access cover for direct wiring
- Mountable in any orientation
- Function selection switch for selecting modulating or floating/ 2-position control

Dimensions in inches (millimeters)

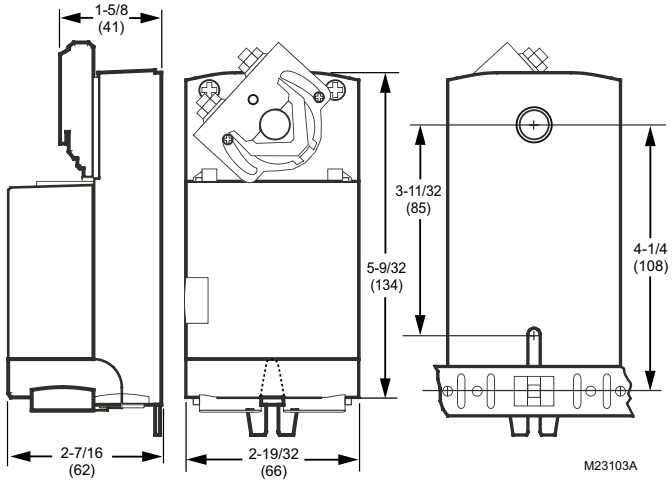

Application: HVAC
Actuator Type: Damper; Valve
Frequency: 50 Hz; 60 Hz
Fail Safe Mode: Non-Spring Return
Torque Rating (lb-in.): 88 lb-in.
Torque Rating (Nm): 10 Nm
Additional Torque Ratings (lb-in.): Maximum Stall – 130 lb-in.
Additional Torque Ratings (Nm): Maximum Stall – 15 Nm
External Auxiliary Switches Available: Yes, SSW2-1M
Rotation to Open: By switch
Rotational Stroke Adjustment: Dual Integral Adj. Stops (3 degree increments)
Stroke: 95 ±3 degrees
Electrical Connections: Enclosed screw terminal strip (22 to 14 AWG)
Mounting: Direct Coupled
Environmental, Electrical, or Ingress Protection Rating: NEMA 2; IP54
Materials: Plenum rated plastic housing
Maximum Noise Rating: Driving (dB(A) @ 1m) – 35
Shaft Adapter Type: U-bolt clamp
Manual operation: Declutch mechanism
Shaft Dimensions: 1/4 to 1/2 in. square or 3/8 to 5/8 in. round (6 to 13 mm square or 8 to 16 mm round)
Weight: 1 lb (0.45 kg)
Approximate, Dimensions: 5.23 in. high x 2.60 in. wide x 2.44 in. deep (134 mm high x 66 mm wide x 62 mm deep.)
Ambient Temperature Range: -5°F to +140°F (-20°C to +60°C)
Shipping and Storage Temperature Range: -22°F to +176°F (-30°C to +80°C)
Approvals, Canadian Underwriters Laboratories Inc.: cUL C22.2 No. 24-93
Approvals, C-Tick: N314
Approvals, Underwriters Laboratories Inc.: UL873, Plenum Rated
Approvals, CE: 89/336/ECC, 73/23/EEC
Operating Humidity Range (% RH): 5 to 95% RH, non-condensing
Includes: Mounting bracket, screws, shaft adapter, water-tight strain-relief cable fittings
Comments: Integral 1/2 in. NPSM conduit connection.
Tradeline Value: Tradeline
Supply Voltage: 24 Vac +20%, -15%; 24 Vdc

Material Number	Control Signal	Feedback	Timing, Nominal	Switch Ratings	Power Consumption	Internal Auxiliary Switch
MN6110A1003/U	Floating; SPDT; On/Off		Driving @ 60 Hz – 95 sec		Driving – 5 VA	0
MN6110A1201/U	Floating; SPDT; On/Off		Driving @ 60 Hz – 95 sec	30 Vdc max., 3 A Class II	Driving – 5 VA	2
MN7510A2001/U	Floating; SPDT; On/Off; (0)2-10 Vdc (4-20 mA w/500 ohm resistor)	(0)2-10 Vdc (max. output: ±1.0 mA)	Driving @ 60 Hz – 95 sec		Driving – 5 VA	0
MN7510A2209/U	Floating; SPDT; On/Off; (0)2-10 Vdc (4-20 mA w/500 ohm resistor)	(0)2-10 Vdc (max. output: ±1.0 mA)	Driving @ 60 Hz – 95 sec	30 Vdc max., 3 A Class II	Driving – 5 VA	2

N20 Series: MN6120; MN7220
Non-Spring Return Direct Coupled Actuator, 175 lb-in.

Dimensions in inches (millimeters)

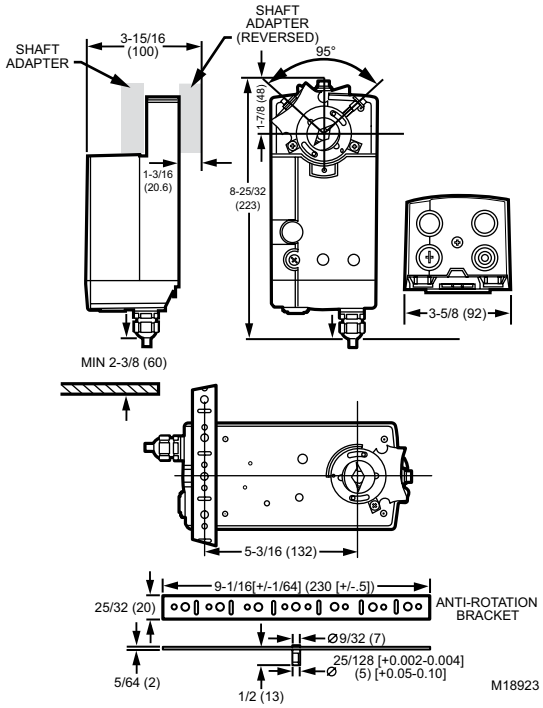

MN6120, MN7220 175 lb-in. (20 Nm), non-spring return, direct coupled, low voltage actuators that accepts adjustable modulating (0/2-10 Vdc) control are used within heating, ventilating, and air-conditioning (HVAC) systems. They can drive a variety of quarter-turn, final control elements for: air dampers, air handling units, ventilation flaps, louvers, and ball valves.

- Control for air damper applications with up to 50 sq. ft. assuming 3.5 lb-in. per sq. ft. of damper area, velocity independent.
- Patented self-centering shaft adapter
- Access cover to facilitate connectivity
- Declutch for manual adjustment
- Mechanical end limits
- Field-installable auxiliary switches
- Rotation direction selectable by switch
- Mountable in any orientation (no IP54 if upside down)
- Mechanical position indicator
- CE approved. UL approved

Application: HVAC
Actuator Type: Damper; Valve
Frequency: 50 Hz; 60 Hz
Fail Safe Mode: Non-Spring Return
Torque Rating (lb-in.): 175 lb-in.
Torque Rating (Nm): 20 Nm
External Auxiliary Switches Available: Yes, SW2-US
Rotation to Open: By switch
Rotational Stroke Adjustment: Dual Integral Adj. Stops (3 degree increments)
Stroke: 95 ±3 degrees
Electrical Connections: Enclosed screw terminal strip (22 to 14 AWG)
Mounting: Direct Coupled
Power Consumption: Driving – 6 VA, 6 W
Timing, Nominal: Driving @ 60 Hz – 95 sec
Environmental, Electrical, or Ingress Protection Rating: NEMA 2; IP54
Materials: Plenum rated plastic housing
Maximum Noise Rating: Driving (dB(A) @ 1m) – 40
Shaft Adapter Type: Self-centering clamping
Manual operation: Declutch mechanism
Shaft Dimensions: 3/8 to 1.06 in. round or 3/8 to 11/16 in. square (10 to 27 mm round or 10 to 18 mm square)
Approximate, Dimensions: 8.78 in. high x 3.62 in. wide x 3.15 in. deep (223 mm high x 92 mm wide x 80 mm deep)
Ambient Temperature Range: -5°F to +140°F (-20°C to +60°C)
Shipping and Storage Temperature Range: -40°F to +175°F (-40°C to +80°C)
Approvals, Canadian Underwriters Laboratories Inc.: cUL C22.2 No. 24-93
Approvals, C-Tick: N314
Approvals, Underwriters Laboratories Inc.: UL873, Plenum Rated
Approvals, CE: 89/336/ECC, 73/23/EEC
Operating Humidity Range (% RH): 5 to 95% RH, non-condensing
Includes: Mounting bracket, self-centering shaft adapter
Comments: Integral 1/2 in. NPSM conduit connection.
Tradeline Value: Tradeline
Supply Voltage: 24 Vac ±15%

Material Number	Control Signal	Feedback	Additional Torque Ratings (lb-in.)	Additional Torque Ratings (Nm)	Switch Ratings	Input Impedance	Weight	Internal Auxiliary Switch
MN6120A1002	Floating; SPDT; On/Off		Maximum Stall – 221 lb-in.	Maximum Stall – 25 Nm			3.2 lb (1.45 kg)	0
MN6120A1200	Floating; SPDT; On/Off		Maximum Stall – 221 lb-in.	Maximum Stall – 25 Nm	250 Vac, 5 A res (3 A ind)		3.2 lb (1.45 kg)	2
MN7220A2007	(0) 2-10 Vdc (4-20 mA w/500 ohm resistor)		Maximum Stall – 257 lb-in.	Maximum Stall – 29 Nm		100K ohm (voltage), 500 ohm (current)	2.98 lb (1.35 kg)	0
MN7220A2205	(0) 2-10 Vdc (4-20 mA w/500 ohm resistor)	(0) 2-10 Vdc (max. output: ±1.0 mA)	Maximum Stall – 257 lb-in.	Maximum Stall – 29 Nm	250 Vac, 5 A res (3 A ind)	100K ohm (voltage), 500 ohm (current)	2.98 lb (1.35 kg)	2

N34 Series: MN6134; MN7234
Non-Spring Return Direct Coupled Actuator, 300 lb-in.

The MN6134; MN7234 300 lb-in. (34 Nm), non-spring return, direct-coupled, low voltage actuators that accepts adjustable modulating (0/2-10 Vdc) control are used within heating, ventilating, and air-conditioning (HVAC) systems. They can drive a variety of quarter-turn, final control elements for: air dampers, air handling units, ventilation flaps, louvers, and ball valves.

- Control for air damper applications with up to 85 sq. ft. assuming 3.5 lb-in. per sq. ft. of damper area, velocity independent
- Patented self-centering shaft adapter
- Access cover to facilitate connectivity
- Declutch for manual adjustment
- Mechanical end limits
- Field-installable auxiliary switches
- Rotation direction selectable by switch
- Mountable in any orientation (no IP54 if upside down)
- Mechanical position indicator
- CE approved. UL approved

Dimensions in inches (millimeters)

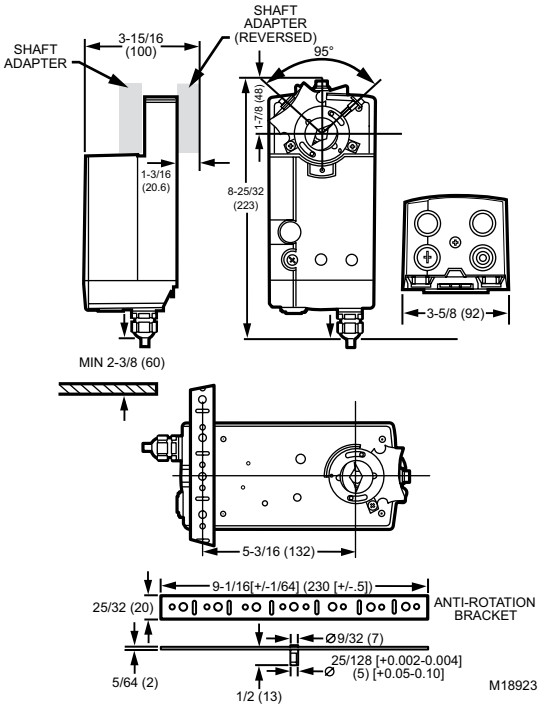

Application: HVAC
Actuator Type: Damper; Valve
Frequency: 50 Hz; 60 Hz
Fail Safe Mode: Non-Spring Return
Torque Rating (lb-in.): 300 lb-in.
Torque Rating (Nm): 34 Nm
Internal Auxiliary Switch: 0
External Auxiliary Switches Available: Yes, SW2-US
Rotation to Open: By switch
Stroke: 95 ±3 degrees
Electrical Connections: Enclosed screw terminal strip (22 to 14 AWG)
Mounting: Direct Coupled
Timing, Nominal: Driving @ 60 Hz – 95 sec
Environmental, Electrical, or Ingress Protection Rating: NEMA 2
Materials: Plenum rated plastic housing
Maximum Noise Rating: Driving (dB(A) @ 1m) – 40
Shaft Adapter Type: Self-centering clamping
Manual operation: Declutch mechanism
Shaft Dimensions: 3/8 to 1.06 in. round or 3/8 to 11/16 in. square (10 to 27 mm round or 10 to 18 mm square)
Approximate, Dimensions: 8.78 in. high x 3.62 in. wide x 3.15 in. deep (223 mm high x 92 mm wide x 80 mm deep)
Ambient Temperature Range: -5°F to +140°F (-20°C to +60°C)
Shipping and Storage Temperature Range: -40°F to +175°F (-40°C to +80°C)
Approvals, Canadian Underwriters Laboratories Inc.: cUL C22.2 No. 24-93
Approvals, C-Tick: N314
Approvals, Underwriters Laboratories Inc.: UL873, Plenum Rated
Approvals, CE: 89/336/ECC, 73/23/EEC
Operating Humidity Range (% RH): 5 to 95% RH, non-condensing
Includes: Mounting bracket, self-centering shaft adapter
Comments: Integral 1/2 in. NPSM conduit connection.
Tradeline Value: Tradeline
Supply Voltage: 24 Vac ±15%; 24 Vdc

Material Number	Control Signal	Feedback	Additional Torque Ratings (lb-in.)	Additional Torque Ratings (Nm)	Power Consumption	Weight	Input Impedance
MN6134A1003	Floating; SPDT; On/Off		Maximum Stall – 327 lb-in.	Maximum Stall – 37 Nm	Driving – 9 VA, 9 W	3.2 lb (1.45 kg)	
MN7234A2008	(0)2-10 Vdc (4-20 mA w/500 ohm resistor)	(0)2-10 Vdc (max. output: ±1.0 mA)	Maximum Stall – 354 lb-in.	Maximum Stall – 40 Nm	Driving – 8 VA, 6 W	2.98 lb (1.35 kg)	100K ohm (voltage), 500 ohm (current)

Zelix™ S03 Series: MS3103; MS4103; MS7403; MS7503; MS8103 Spring Return Direct Coupled Actuator, 27 lb-in.

Dimensions in inches (millimeters)

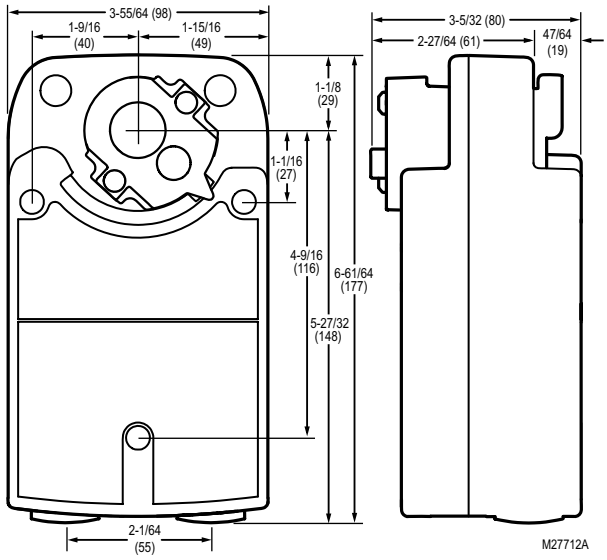

MS3103, MS3105, MS4103, MS4105, MS7403, MS7405, MS7503, MS7505, MS8103, MS8105 27 lb-in. (3 Nm), spring return direct-coupled, line voltage actuators accept two-position (SPST) control are used within heating, ventilating, and air-conditioning (HVAC) systems. They can drive a variety of quarter-turn, final control elements requiring spring return fail-safe operation for: air dampers, air handlers, ventilation flaps, louvers, and ball valves.

- Brushless DC submotor with electronic stall protection on all models
- Self-centering shaft adaptor (shaft coupling) for wide range of shaft sizes
- Models available for use with two-position, SPST, line- (Series 40) or low- (Series 80) voltage controls
- Models available for use with floating or switched SPDT (Series 60) controls
- Models available for use with proportional current or voltage (Series 70) controls
- Models available with combined floating and modulating control in a single device
- Models available with an internal end switch
- Models available with three-foot, 18 AWG color-coded cable
- Access cover to facilitate connectivity
- Durable plastic housing with built-in mechanical end limits
- Spring return direction field selectable
- Shaft position indicator and scale
- UL (cUL) listed and CE compliant
- All models are plenum rated per UL873

Application: HVAC
Actuator Type: Damper; Valve
Frequency: 50 Hz; 60 Hz
Fail Safe Mode: Spring Return
Torque Rating (lb-in.): 27 lb-in.
Torque Rating (Nm): 3 Nm
Spring Return Torque/Force (lb-in., lbf): 27 lb-in
Spring Return Torque/Force (Nm, N): 3 Nm
Additional Torque Ratings (lb-in.): Maximum Stall – 70 lb-in.
Additional Torque Ratings (Nm): Maximum Stall – 8 Nm
External Auxiliary Switches Available: No
Rotation to Open: By switch
Rotational Stroke Adjustment: Mechanically limited 5 degree increments
Stroke: 95 ±3 degrees
Electrical Connections: Enclosed screw terminal strip (22 to 14 AWG)
Mounting: Direct Coupled
Spring Return Timing: Maximum – 25 sec
Environmental, Electrical, or Ingress Protection Rating: NEMA 2; IP54
Materials: Plenum rated plastic housing
Shaft Adapter Type: Self-centering clamping
Shaft Dimensions: 3/8 to 5/8 in. round or 1/4 to 1/2 in. square (9 to 16 mm round or 6 to 13 mm square)
Spring Return Direction: By orientation
Weight: 3.5 lb (1.6 kg)
Ambient Temperature Range: -40°F to +149°F; -22°F to +149°F Two position only (-40°C to +65°C; -30°C to +65°C Two position only)
Shipping and Storage Temperature Range: -40°F to +150°F (-40°C to +65°C)
Approvals, Canadian Underwriters Laboratories Inc.: cUL C22.2 No. 24-93
Approvals, C-Tick: N314
Approvals, Underwriters Laboratories Inc.: UL 873
Approvals, CE: EMC 2004/108/EC; Certification Low Voltage Directive 2006/95/EC; IEC 60730-1 and Part 2-14
Operating Humidity Range (% RH): 5 to 95% RH, non-condensing
Includes: Mounting bracket, self-centering shaft adapter

Material Number	Control Signal	Feedback	Internal Auxiliary Switch	Switches	Switch Ratings	Power Consumption	Timing, Nominal	Maximum Noise Rating	Supply Voltage	Input Impedance
MS3103J1030/U	Sylk-enabled	Sylk-enabled	0			Driving – 6/3 VA	Driving @ 60 Hz – 90 sec	Driving (dB(A) @ 1m) – 40; Holding (dB(A) @ 1m) – 20 (no audible noise)	24 Vac or Vdc	

Material Number	Control Signal	Feedback	Internal Auxiliary Switch	Switches	Switch Ratings	Power Consumption	Timing, Nominal	Maximum Noise Rating	Supply Voltage	Input Impedance
MS4103A1030/U	Two position; SPST		0			Driving – 6/9 VA	Driving @ 60 Hz – 45 sec	Driving (dB(A) @ 1m) – 50; Holding (dB(A) @ 1m) – 20 (no audible noise)	100 to 250 Vac	
MS4103A1130/U	Two position; SPST		1	Internal Auxiliary - adjustable 0-95 degrees	250 Vac, 8 A res (5 A ind)	Driving – 6/9 VA	Driving @ 60 Hz – 45 sec	Driving (dB(A) @ 1m) – 50; Holding (dB(A) @ 1m) – 20 (no audible noise)	100 to 250 Vac	
MS7403A2030/U	Three position; SPDT; Floating; On/Off; 3 kOhm; 2-10 Vdc (4-20 mA w/ 500 ohm resistor)	2-10 Vdc	0	Internal Auxiliary - Minimum position		Driving – 6/3 VA	Driving @ 60 Hz – 90 sec	Driving (dB(A) @ 1m) – 40; Holding (dB(A) @ 1m) – 20 (no audible noise)	24 Vac or Vdc	Min. 95 kOhm
MS7503A2030/U	SPDT; Floating; On/Off; (0)2-10 Vdc (4-20 mA w/500 ohm resistor)	(0)2-10 Vdc	0			Driving – 6/3 VA	Driving @ 60 Hz – 90 sec	Driving (dB(A) @ 1m) – 40; Holding (dB(A) @ 1m) – 20 (no audible noise)	24 Vac or Vdc	Min. 95 kOhm
MS7503A2130/U	SPDT; Floating; On/Off; (0)2-10 Vdc (4-20 mA w/500 ohm resistor)	(0)2-10 Vdc	1	Internal Auxiliary - adjustable 0-95 degrees	250 Vac, 8 A res (5 A ind)	Driving – 6/3 VA	Driving @ 60 Hz – 90 sec	Driving (dB(A) @ 1m) – 40; Holding (dB(A) @ 1m) – 20 (no audible noise)	24 Vac or Vdc	Min. 95 kOhm
MS8103A1030/U	Two position; SPST		0			Driving – 6/3 VA	Driving @ 60 Hz – 45 sec	Driving (dB(A) @ 1m) – 50; Holding (dB(A) @ 1m) – 20 (no audible noise)	24 Vac or Vdc	
MS8103A1130/U	Two position; SPST		1	Internal Auxiliary - adjustable 0-95 degrees	250 Vac, 8 A res (5 A ind)	Driving – 6/3 VA	Driving @ 60 Hz – 45 sec	Driving (dB(A) @ 1m) – 50; Holding (dB(A) @ 1m) – 20 (no audible noise)	24 Vac or Vdc	

Zelix™ S05 Series: MS3105; MS4105; MS7405; MS7505; MS8105 Spring Return Direct Coupled Actuator, 44 lb-in.

Dimensions in inches (millimeters)

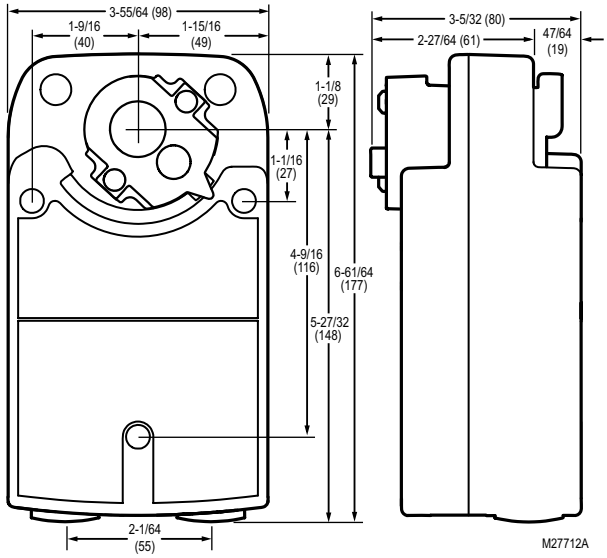

MS3103, MS3105, MS4103, MS4105, MS7403, MS7405, MS7503, MS7505, MS8103, MS8105 44 lb-in. (5 Nm), spring return direct-coupled, line voltage actuators that accept two-position (SPST) control are used within heating, ventilating, and air-conditioning (HVAC) systems. They can drive a variety of quarter-turn, final control elements requiring spring return fail-safe operation for: air dampers, air handlers, ventilation flaps, louvers, and ball valves.

- Brushless DC submotor with electronic stall protection on all models
- Self-centering shaft adaptor (shaft coupling) for wide range of shaft sizes
- Models available for use with two-position, SPST, line- (Series 40) or low- (Series 80) voltage controls
- Models available for use with floating or switched SPDT (Series 60) controls
- Models available for use with proportional current or voltage (Series 70) controls
- Models available with combined floating and modulating control in a single device
- Models available with an internal end switch
- Models available with three-foot, 18 AWG color-coded cable
- Access cover to facilitate connectivity
- Durable plastic housing with built-in mechanical end limits
- Spring return direction field selectable
- Shaft position indicator and scale
- UL (cUL) listed and CE compliant
- All models are plenum rated per UL873
- Integral 1/2 in. NPSM conduit connection on some models

Application: HVAC
Actuator Type: Damper; Valve
Frequency: 50 Hz; 60 Hz
Fail Safe Mode: Spring Return
Torque Rating (lb-in.): 44 lb-in.
Torque Rating (Nm): 5 Nm
Spring Return Torque/Force (lb-in., lbf): 44 lb-in.
Spring Return Torque/Force (Nm, N): 5 Nm
Additional Torque Ratings (lb-in.): Maximum Stall – 105 lb-in.
Additional Torque Ratings (Nm): Maximum Stall – 12 Nm
External Auxiliary Switches Available: No
Rotation to Open: By switch
Rotational Stroke Adjustment: Mechanically limited 5 degree increments
Stroke: 95 ±3 degrees
Mounting: Direct Coupled
Spring Return Timing: Maximum – 25 sec
Environmental, Electrical, or Ingress Protection Rating: NEMA 2; IP54
Materials: Plenum rated plastic housing
Shaft Adapter Type: Self-centering clamping
Shaft Dimensions: 3/8 to 5/8 in. round or 1/4 to 1/2 in. square (9 to 16 mm round or 6 to 13 mm square)
Spring Return Direction: By orientation
Weight: 3.5 lb (1.6 kg)
Ambient Temperature Range: -40°F to +149°F; -22°F to +149°F Two position only (-40°C to +65°C; -30°C to +65°C Two position only)
Shipping and Storage Temperature Range: -40°F to +150°F (-40°C to +65°C)
Approvals, Canadian Underwriters Laboratories Inc.: cUL C22.2 No. 24-93
Approvals, C-Tick: N314
Approvals, Underwriters Laboratories Inc.: UL 873
Approvals, CE: EMC 2004/108/EC; Certification Low Voltage Directive 2006/95/EC; IEC 60730-1 and Part 2-14
Operating Humidity Range (% RH): 5 to 95% RH, non-condensing
Includes: Mounting bracket, self-centering shaft adapter

Material Number	Electrical Connections Size	Feedback	Internal Auxiliary Switch	Switches	Switch Ratings	Electrical Connections	Power Consumption	Timing, Nominal	Maximum Noise Rating	Cable	Input Impedance	Supply Voltage	Comments
Floating; On/Off; (0)2-10 Vdc (4-20 mA w/500 ohm resistor); SPDT													
MS7505A2030/U		(0) 2-10 Vdc	0			Enclosed screw terminal strip (22 to 14 AWG)	Driving – 6/3 VA	Driving @ 60 Hz – 90 sec	Driving (dB(A) @ 1m) – 40; Holding (dB(A) @ 1m) – 20 (no audible noise)		Min. 95 kOhm	24 Vac or Vdc	
MS7505A2130/U		(0) 2-10 Vdc	1	Internal Auxiliary - adjustable 0-95 degrees	250 Vac, 8 A res (5 A ind)	Enclosed screw terminal strip (22 to 14 AWG)	Driving – 6/3 VA	Driving @ 60 Hz – 90 sec	Driving (dB(A) @ 1m) – 40; Holding (dB(A) @ 1m) – 20 (no audible noise)		Min. 95 kOhm	24 Vac or Vdc	
MS7505W2030/U	36 in. (0.9 m)	(0) 2-10 Vdc	0			18 AWG color-coded cable	Driving – 8 VA	Driving @ 60 Hz – 90 sec	Driving (dB(A) @ 1m) – 40; Holding (dB(A) @ 1m) – 20 (no audible noise)	Threaded conduit connector	Min. 95 kOhm	24 Vac or Vdc	Integral 1/2 in. NPSM conduit connection.
MS7505W2130/U	36 in. (0.9 m)	(0) 2-10 Vdc	1	Internal Auxiliary - adjustable 0-95 degrees	250 Vac, 8 A res (5 A ind)	18 AWG color-coded cable	Driving – 8 VA	Driving @ 60 Hz – 90 sec	Driving (dB(A) @ 1m) – 40; Holding (dB(A) @ 1m) – 20 (no audible noise)	Threaded conduit connector	Min. 95 kOhm	24 Vac or Vdc	Integral 1/2 in. NPSM conduit connection.
Sylk-enabled													
MS3105J3030/U		Sylk-enabled	0			Enclosed screw terminal strip (22 to 14 AWG)	Driving – 6/3 VA	Driving @ 60 Hz – 90 sec	Driving (dB(A) @ 1m) – 40; Holding (dB(A) @ 1m) – 20 (no audible noise)			24 Vac or Vdc	
MS3105J3130/U		Sylk-enabled	1			Enclosed screw terminal strip (22 to 14 AWG)	Driving – 6/3 VA	Driving @ 60 Hz – 90 sec	Driving (dB(A) @ 1m) – 40; Holding (dB(A) @ 1m) – 20 (no audible noise)			24 Vac or Vdc	
Three position; SPDT; Floating; On/Off; 3 kOhm; 2-10 Vdc (4-20 mA w/500 ohm resistor)													
MS7405A2030/U		2-10 Vdc	0	Internal Auxiliary - Minimum position		Enclosed screw terminal strip (22 to 14 AWG)	Driving – 6/3 VA	Driving @ 60 Hz – 90 sec	Driving (dB(A) @ 1m) – 40; Holding (dB(A) @ 1m) – 20 (no audible noise)		Min. 95 kOhm	24 Vac or Vdc	
Two position; SPST													
MS4105A1030/U			0			Enclosed screw terminal strip (22 to 14 AWG)	Driving – 6/9 VA	Driving @ 60 Hz – 45 sec	Driving (dB(A) @ 1m) – 50; Holding (dB(A) @ 1m) – 20 (no audible noise)			100 to 250 Vac	

Direct Coupled Actuators - Spring Return

Material Number	Electrical Connections Size	Feedback	Internal Auxiliary Switch	Switches	Switch Ratings	Electrical Connections	Power Consumption	Timing, Nominal	Maximum Noise Rating	Cable	Input Impedance	Supply Voltage	Comments
MS4105A1130/U			1	Internal Auxiliary - adjustable 0-95 degrees	250 Vac, 8 A res (5 A ind)	Enclosed screw terminal strip (22 to 14 AWG)	Driving – 6/9 VA	Driving @ 60 Hz – 45 sec	Driving (dB(A) @ 1m) – 50; Holding (dB(A) @ 1m) – 20 (no audible noise)			100 to 250 Vac	
MS8105A1030/U			0			Enclosed screw terminal strip (22 to 14 AWG)	Driving – 6/3 VA	Driving @ 60 Hz – 45 sec	Driving (dB(A) @ 1m) – 50; Holding (dB(A) @ 1m) – 20 (no audible noise)			24 Vac or Vdc	
MS8105A1130/U			1	Internal Auxiliary - adjustable 0-95 degrees	250 Vac, 8 A res (5 A ind)	Enclosed screw terminal strip (22 to 14 AWG)	Driving – 6/3 VA	Driving @ 60 Hz – 45 sec	Driving (dB(A) @ 1m) – 50; Holding (dB(A) @ 1m) – 20 (no audible noise)			24 Vac or Vdc	
MS8105W1030/U	36 in. (0.9 m)		0			18 AWG color-coded cable	Driving – 8 VA	Driving @ 60 Hz – 45 sec	Driving (dB(A) @ 1m) – 50; Holding (dB(A) @ 1m) – 20 (no audible noise)	Threaded conduit connector		24 Vac or Vdc	Integral 1/2 in. NPSM conduit connection.
MS8105W1130/U	36 in. (0.9 m)		1	Internal Auxiliary - adjustable 0-95 degrees	250 Vac, 8 A res (5 A ind)	18 AWG color-coded cable	Driving – 8 VA	Driving @ 60 Hz – 45 sec	Driving (dB(A) @ 1m) – 50; Holding (dB(A) @ 1m) – 20 (no audible noise)	Threaded conduit connector		24 Vac or Vdc	Integral 1/2 in. NPSM conduit connection.

S10 Series: MS3110; MS4110; MS7510; MS8110 Spring Return Direct Coupled Actuator, 88 lb-in.

Dimensions in inches (millimeters)

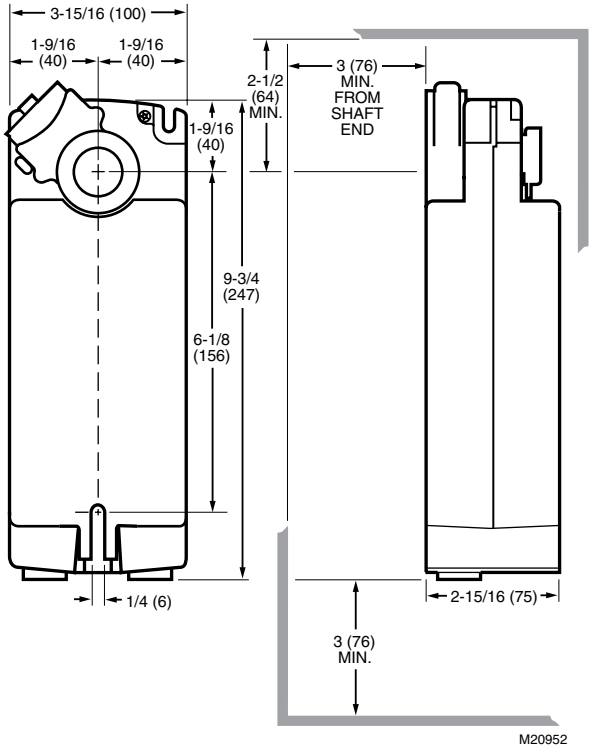

MS3110, MS4110, MS7510, and MS8110 Spring Return Direct Coupled Actuators (DCA) are used within heating, ventilating, and air-conditioning (HVAC) systems. They can drive a variety of quarter-turn, final control elements requiring spring return fail-safe operation.

- Brushless DC submotor with electronic stall protection for floating/modulating models.
- Brush DC submotor with electronic stall protection for 2-position models.
- Self-centering shaft adapter (shaft coupling) for wide range of shaft sizes.
- Models available for use with two-position, single pole single throw (SPST), line- (Series 40) or low- (Series 80) voltage controls.
- Models available for use with floating or switched single-pole, double-throw (SPDT) (Series 60) controls.
- Models available for use with proportional current or voltage (Series 70) controls.
- Models available with combined floating/modulating control in a single device.
- Models available with adjustable zero and span.
- Models available with line-voltage internal end switches.
- Models available with three-foot, 18 AWG color-coded cable.
- Access cover to facilitate connectivity.
- Metal housing with built-in mechanical end limits.
- Spring return direction field-selectable.
- Shaft position indicator and scale.
- Manual winding capability with locking function.
- UL (cUL) listed and CE compliant.
- All Models are plenum-rated per UL873.

Application: HVAC
Actuator Type: Damper; Valve
Frequency: 50 Hz; 60 Hz
Fail Safe Mode: Spring Return
Torque Rating (lb-in.): 88 lb-in.
Torque Rating (Nm): 10 Nm
Spring Return Torque/Force (lb-in., lbf): 88 lb-in.
Spring Return Torque/Force (Nm, N): 10 Nm
Additional Torque Ratings (lb-in.): Maximum Stall – 150 lb-in.
Additional Torque Ratings (Nm): Maximum Stall – 17 Nm
External Auxiliary Switches Available: Yes, SW2-US
Rotational Stroke Adjustment: Mechanically limited 5 degree increments
Stroke: 95 ±3 degrees
Mounting: Direct Coupled
Spring Return Timing: Maximum – 20 sec
Environmental, Electrical, or Ingress Protection Rating: NEMA 2
Materials: Aluminum housing, Plenum rated plastic access cover
Maximum Noise Rating: Driving (dB(A) @ 1m) – 40; Holding (dB(A) @ 1m) – 20 (no audible noise)
Shaft Adapter Type: Self-centering clamping
Manual operation: Manual crank
Shaft Dimensions: 3/8 to 1.06 in. round or 3/8 to 11/16 in. square (10 to 27 mm round or 10 to 18 mm square)
Spring Return Direction: By orientation
Weight: 6 lb (2.72 kg)
Ambient Temperature Range: -40°F to +140°F (-40°C to +60°C)
Shipping and Storage Temperature Range: -40°F to +158°F (-40°C to +70°C)
Approvals, Canadian Underwriters Laboratories Inc.: cUL C22.2 No. 24-93
Approvals, C-Tick: N314
Approvals, Underwriters Laboratories Inc.: UL873, Plenum Rated
Approvals, CE: 89/336/ECC, 73/23/EEC
Operating Humidity Range (% RH): 5 to 95% RH, non-condensing
Includes: Mounting bracket, self-centering shaft adapter, 3 mm crank
Comments: Integral 1/2 in. NPSM conduit connection

Material Number	Electrical Connections Size	Feedback	Internal Auxiliary Switch	Rotation to Open	Switch Ratings	Electrical Connections	Power Consumption	Timing, Nominal	Cable	Input Impedance	Supply Voltage	Control Signal
MS3110J1008/U		Sylk-enabled	0	By switch		Enclosed screw terminal strip (22 to 14 AWG)	Driving – 14 VA, Holding – 5 VA	Driving @ 60 Hz – 90 sec			24 Vac ±20% or Vdc	Sylk-enabled
MS3110J1206/U		Sylk-enabled	2	By switch	250 Vac, 5 A res	Enclosed screw terminal strip (22 to 14 AWG)	Driving – 14 VA, Holding – 5 VA	Driving @ 60 Hz – 90 sec			24 Vac ±20% or Vdc	Sylk-enabled
MS4110A1002/U			0			Enclosed screw terminal strip (22 to 14 AWG)	Driving – 45 VA, Holding – 13 VA	Driving @ 60 Hz – 45 sec			100 to 250 Vac	Two position; SPST
MS4110A1200/U			2		250 Vac, 5 A res	Enclosed screw terminal strip (22 to 14 AWG)	Driving – 45 VA, Holding – 13 VA	Driving @ 60 Hz – 45 sec			100 to 250 Vac	Two position; SPST
MS7510A2008/U		2-10 Vdc (max. output: ±1.0 mA)	0	By switch		Enclosed screw terminal strip (22 to 14 AWG)	Driving – 14 VA, Holding – 5 VA	Driving @ 60 Hz – 90 sec		Min. 95 kOhm	24 Vac ±20% or Vdc	Floating; On/Off; (0)2-10 Vdc (4-20 mA w/500 ohm resistor); SPDT
MS7510A2206/U		2-10 Vdc (max. output: ±1.0 mA)	2	By switch	250 Vac, 5 A res	Enclosed screw terminal strip (22 to 14 AWG)	Driving – 14 VA, Holding – 5 VA	Driving @ 60 Hz – 90 sec		Min. 95 kOhm	24 Vac ±20% or Vdc	Floating; On/Off; (0) 2-10 Vdc (4-20 mA w/500 ohm resistor); SPDT
MS7510H2209/U		2-10 Vdc (max. output: ±1.0 mA)	2	By switch	250 Vac, 5 A res (3 A ind)	Enclosed screw terminal strip (22 to 14 AWG)	Driving – 14 VA, Holding – 5 VA	Driving @ 60 Hz – 90 sec		Min. 95 kOhm	24 Vac ±20% or Vdc	Floating; On/Off; (0) 2-10 Vdc (4-20 mA w/500 ohm resistor); SPDT
MS7510W2008/U	36 in. (0.9 m)	2-10 Vdc (max. output: ±1.0 mA)	0	By switch		18 AWG color-coded cable	Driving – 14 VA, Holding – 5 VA	Driving @ 60 Hz – 90 sec	Threaded conduit connector	Min. 95 kOhm	24 Vac ±20% or Vdc	Floating; (0) 2-10 Vdc (4-20 mA w/500 ohm resistor)
MS7510W2206/U	36 in. (0.9 m)	2-10 Vdc (max. output: ±1.0 mA)	2	By switch	250 Vac, 5 A res (3 A ind)	18 AWG color-coded cable	Driving – 14 VA, Holding – 5 VA	Driving @ 60 Hz – 90 sec	Threaded conduit connector	Min. 95 kOhm	24 Vac ±20% or Vdc	Floating; (0) 2-10 Vdc (4-20 mA w/500 ohm resistor)
MS8110A1008/U			0			Enclosed screw terminal strip (22 to 14 AWG)	Driving – 30 VA, Holding – 8 VA	Driving @ 60 Hz – 45 sec			24 Vac ±20% or Vdc	Two position; SPST
MS8110A1206/U			2		250 Vac, 5 A res	Enclosed screw terminal strip (22 to 14 AWG)	Driving – 30 VA, Holding – 8 VA	Driving @ 60 Hz – 45 sec			24 Vac ±20% or Vdc	Two position; SPST
MS8110W1008/U	36 in. (0.9 m)		0			18 AWG color-coded cable	Driving – 30 VA, Holding – 8 VA	Driving @ 60 Hz – 45 sec	Threaded conduit connector		24 Vac ±20% or Vdc	Two position; SPST
MS8110W1206/U	36 in. (0.9 m)		2		250 Vac, 5 A res (3 A ind)	18 AWG color-coded cable	Driving – 30 VA, Holding – 8 VA	Driving @ 60 Hz – 45 sec	Threaded conduit connector		24 Vac ±20% or Vdc	Two position; SPST

S20 Series: MS3120; MS4120; MS7520; MS8120 Spring Return Direct Coupled Actuator, 175 lb-in.

Dimensions in inches (millimeters)

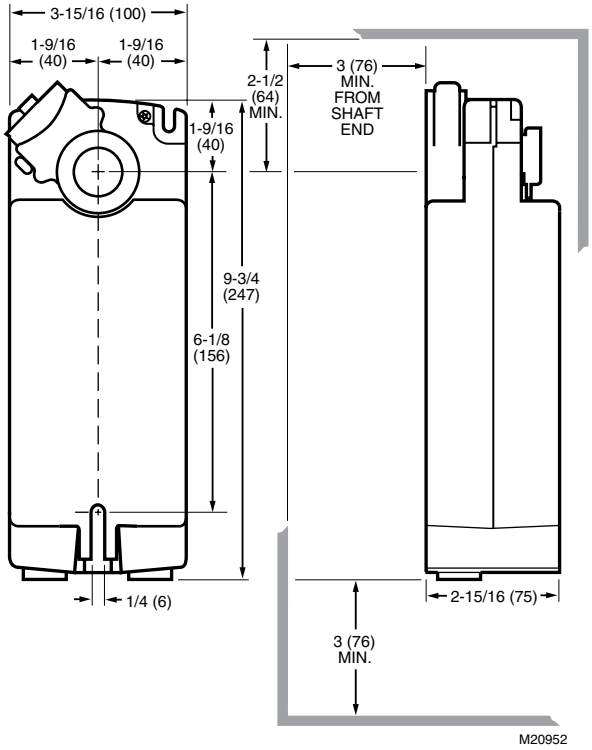

MS3120, MS4120, MS7520, MS8120 Spring Return Direct Coupled Actuators (DCA) are used within heating, ventilating, and air-conditioning (HVAC) systems. They can drive a variety of quarter-turn, final control elements requiring spring return fail safe operation.

- Brushless DC submotor with electronic stall protection for floating/modulating models.
- Brush DC submotor with electronic stall protection for 2-position models.
- Self-centering shaft adapter (shaft coupling) for wide range of shaft sizes.
- Models available for use with two-position, single pole single throw (SPST), line- (Series 40) or low- (Series 80) voltage controls.
- Models available for use with floating or switched single-pole, double-throw (SPDT) (Series 60) controls.
- Models available for use with proportional current or voltage (Series 70) controls.
- Models available with combined floating/modulating control in a single device.
- Models available with adjustable zero and span.
- Models available with line-voltage internal end switches.
- Models available with three-foot, 18 AWG color-coded cable.
- Access cover to facilitate connectivity.
- Metal housing with built-in mechanical end limits.
- Spring return direction field-selectable.
- Shaft position indicator and scale.
- Manual winding capability with locking function.
- UL (cUL) listed and CE compliant.
- All models are plenum-rated per UL873.

Application: HVAC
Actuator Type: Damper; Valve
Frequency: 50 Hz; 60 Hz
Fail Safe Mode: Spring Return
Torque Rating (lb-in.): 175 lb-in.
Torque Rating (Nm): 20 Nm
Spring Return Torque/Force (lb-in., lbf): 175 lb-in.
Spring Return Torque/Force (Nm, N): 20 Nm
Additional Torque Ratings (lb-in.): Maximum Stall – 300 lb-in.
Additional Torque Ratings (Nm): Maximum Stall – 34 Nm
External Auxiliary Switches Available: Yes, SW2-US
Rotational Stroke Adjustment: Mechanically limited 5 degree increments
Stroke: 95 ±3 degrees
Mounting: Direct Coupled
Spring Return Timing: Maximum – 20 sec
Environmental, Electrical, or Ingress Protection Rating: NEMA 2
Materials: Aluminum housing, Plenum rated plastic access cover
Maximum Noise Rating: Driving (dB(A) @ 1m) – 40; Holding (dB(A) @ 1m) – 20 (no audible noise)
Shaft Adapter Type: Self-centering clamping
Manual operation: Manual crank
Shaft Dimensions: 3/8 to 1.06 in. round or 3/8 to 11/16 in. square (10 to 27 mm round or 10 to 18 mm square)
Spring Return Direction: By orientation
Weight: 6 lb (2.72 kg)
Ambient Temperature Range: -40°F to +140°F (-40°C to +60°C)
Shipping and Storage Temperature Range: -40°F to +158°F (-40°C to +70°C)
Approvals, Canadian Underwriters Laboratories Inc.: cUL C22.2 No. 24-93
Approvals, C-Tick: N314
Approvals, Underwriters Laboratories Inc.: UL873, Plenum Rated
Approvals, CE: 89/336/ECC, 73/23/EEC
Operating Humidity Range (% RH): 5 to 95% RH, non-condensing
Includes: Mounting bracket, self-centering shaft adapter, 3 mm crank
Comments: Integral 1/2 in. NPSM conduit connection

Material Number	Electrical Connections Size	Feedback	Internal Auxiliary Switch	Rotation to Open	Switch Ratings	Electrical Connections	Power Consumption	Timing, Nominal	Cable	Input Impedance	Supply Voltage	Control Signal
MS3120J1007/U		Sylk-enabled	0	By switch		Enclosed screw terminal strip (22 to 14 AWG)	Driving – 16 VA, Holding – 5 VA	Driving @ 60 Hz – 90 sec			24 Vac ±20% or Vdc	Sylk-enabled
MS3120J1205/U		Sylk-enabled	2	By switch	250 Vac, 5 A res	Enclosed screw terminal strip (22 to 14 AWG)	Driving – 16 VA, Holding – 5 VA	Driving @ 60 Hz – 90 sec			24 Vac ±20% or Vdc	Sylk-enabled
MS4120A1001/U			0			Enclosed screw terminal strip (22 to 14 AWG)	Driving – 60 VA, Holding – 13 VA	Driving @ 60 Hz – 45 sec			100 to 250 Vac	Two position; SPST
MS4120A1209/U			2		250 Vac, 5 A res	Enclosed screw terminal strip (22 to 14 AWG)	Driving – 60 VA, Holding – 13 VA	Driving @ 60 Hz – 45 sec			100 to 250 Vac	Two position; SPST
MS7520A2007/U		2-10 Vdc (max. output: ±1.0 mA)	0	By switch		Enclosed screw terminal strip (22 to 14 AWG)	Driving – 16 VA, Holding – 5 VA	Driving @ 60 Hz – 90 sec		Min. 95 kOhm	24 Vac ±20% or Vdc	Floating; On/Off; (0)2-10 Vdc (4-20 mA w/500 ohm resistor); SPDT
MS7520A2205/U		2-10 Vdc (max. output: ±1.0 mA)	2	By switch	250 Vac, 5 A res	Enclosed screw terminal strip (22 to 14 AWG)	Driving – 16 VA, Holding – 5 VA	Driving @ 60 Hz – 90 sec		Min. 95 kOhm	24 Vac ±20% or Vdc	Floating; On/Off; (0)2-10 Vdc (4-20 mA w/500 ohm resistor); SPDT
MS7520H2208/U		2-10 Vdc (max. output: ±1.0 mA)	2	By switch	250 Vac, 5 A res (3 A ind)	Enclosed screw terminal strip (22 to 14 AWG)	Driving – 16 VA, Holding – 5 VA	Driving @ 60 Hz – 90 sec		Min. 95 kOhm	24 Vac ±20% or Vdc	Floating; On/Off; (0)2-10 Vdc (4-20 mA w/500 ohm resistor); SPDT
MS7520W2007/U	36 in. (0.9 m)	2-10 Vdc (max. output: ±1.0 mA)	0	By switch		18 AWG color-coded cable	Driving – 16 VA, Holding – 5 VA	Driving @ 60 Hz – 90 sec	Threaded conduit connector	Min. 95 kOhm	24 Vac ±20% or Vdc	Floating; (0)2-10 Vdc (4-20 mA w/500 ohm resistor)
MS7520W2205/U	36 in. (0.9 m)	2-10 Vdc (max. output: ±1.0 mA)	2	By switch	250 Vac, 5 A res (3 A ind)	18 AWG color-coded cable	Driving – 16 VA, Holding – 5 VA	Driving @ 60 Hz – 90 sec	Threaded conduit connector	Min. 95 kOhm	24 Vac ±20% or Vdc	Floating; (0)2-10 Vdc (4-20 mA w/500 ohm resistor)
MS8120A1007/U			0			Enclosed screw terminal strip (22 to 14 AWG)	Driving – 40 VA, Holding – 8 VA	Driving @ 60 Hz – 45 sec			24 Vac ±20% or Vdc	Two position; SPST
MS8120A1205/U			2		250 Vac, 5 A res	Enclosed screw terminal strip (22 to 14 AWG)	Driving – 40 VA, Holding – 8 VA	Driving @ 60 Hz – 45 sec			24 Vac ±20% or Vdc	Two position; SPST
MS8120W1007/U	36 in. (0.9 m)		0			18 AWG color-coded cable	Driving – 40 VA, Holding – 8 VA	Driving @ 60 Hz – 45 sec	Threaded conduit connector		24 Vac ±20% or Vdc	Two position; SPST
MS8120W1205/U	36 in. (0.9 m)		2		250 Vac, 5 A res (3 A ind)	18 AWG color-coded cable	Driving – 40 VA, Holding – 8 VA	Driving @ 60 Hz – 45 sec	Threaded conduit connector		24 Vac ±20% or Vdc	Two position; SPST

MS4120F; MS4620F; MS8120F
Fast-Acting, Two-Position Actuators, 175 lb-in.

The MS4120F; MS4620F and MS8120F are 175 lb-in. (20 Nm), spring return direct-coupled, 230 Vac, 120 Vac, 24 Vac actuators that accept two position (SPST) control with an integral junction box. The actuator accepts an on/off signal from a single-pole, single-throw (SPST) controller. They are designed to operate reliably in smoke control systems requiring Underwriter's Laboratories Inc. UL555S ratings up to 350°F.

Dimensions in inches (millimeters)

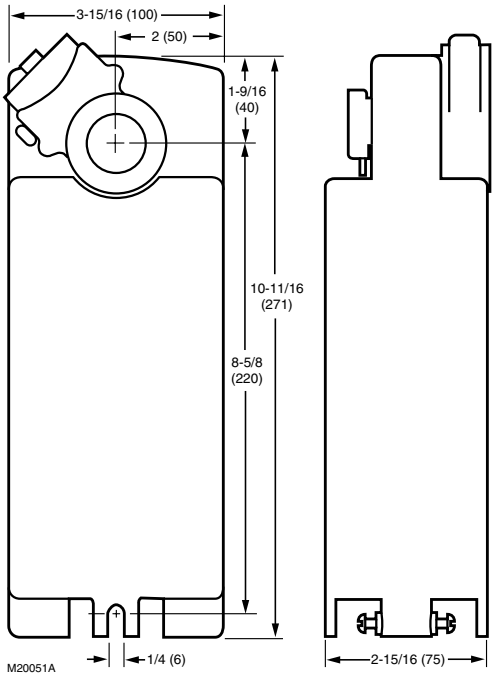

- Brush DC submotor with electronic stall protection for 2-position models
- Self-centering shaft adapter (shaft coupling) for wide range of shaft sizes
- Models available for use with two-position, single pole single throw (SPST), line- (Series 40) or low- (Series 80) voltage controls
- Metal housing with built-in mechanical end limits
- Spring return direction field-selectable
- Shaft position indicator and scale
- Manual winding capability with locking function
- UL (cUL) listed and CE compliant
- All Models are plenum-rated per UL60730

Application: Fire and Smoke
Actuator Type: Damper
Fail Safe Mode: Spring Return
Torque Rating (lb-in.): 175 lb-in.
Torque Rating (Nm): 20 Nm
Spring Return Torque/Force (lb-in., lbf): 175 lb-in.
Spring Return Torque/Force (Nm, N): 20 Nm
Additional Torque Ratings (lb-in.): Maximum Stall – 425 lb-in.; Minimum Driving at 350°F – 175 lb-in.
Additional Torque Ratings (Nm): Maximum Stall – 48 Nm; Minimum Driving at 175°C – 20 Nm
External Auxiliary Switches Available: No
Stroke: 95 ±3 degrees
Electrical Connections: Teflon-jacketed cable
Mounting: Direct Coupled
Spring Return Timing: Maximum – 15 sec
Environmental, Electrical, or Ingress Protection Rating: NEMA 2; IP54
Materials: Aluminum housing
Maximum Noise Rating: Driving (dB(A) @ 1m) – 70; Holding (dB(A) @ 1m) – 20 (no audible noise)
Shaft Adapter Type: Self-centering clamping
Manual operation: Manual crank
Shaft Dimensions: 3/8 to 1.06 in. round or 3/8 to 11/16 in. square (10 to 27 mm round or 10 to 18 mm square)
Weight: 8 lb (3.63 kg)
Approximate, Dimensions: 10.67 in. high x 3.94 in. wide x 2.95 in. deep (271 mm high x 100 mm wide x 75 mm deep)
Ambient Temperature Range: -40°F to +130°F (-40°C to +55°C)
Shipping and Storage Temperature Range: -40°F to +140°F (-40°C to +60°C)
Approvals, Canadian Underwriters Laboratories Inc.: cUL C22.2 No. 24-93
Approvals, C-Tick: N314
Approvals, Underwriters Laboratories Inc.: UL60730, Plenum Rated
Approvals, CE: 89/336/ECC, 73/23/EEC
Operating Humidity Range (% RH): 5 to 95% RH, non-condensing
Includes: Self-centering shaft adapter, 3 mm crank
Comments: Two integral 3/8 in. flexible conduit connections
Electrical Connections Size: 40 in. (1 m)

Material Number	Control Signal	Supply Voltage	Frequency	Timing, Nominal	Switch Ratings	Power Consumption	Internal Auxiliary Switch	Spring Return Direction
175 lb-in. 230V								
MS4620F1005/U	Two position; SPST	230 Vac ±10%	50 Hz; 60 Hz	Driving @ 60 Hz (sec) – 15 sec		Driving – 0.20A, 35W, Holding – 0.14A, 10W	0	By orientation
MS4620F1203/U	Two position; SPST	230 Vac ±10%	50 Hz; 60 Hz	Driving @ 60 Hz (sec) – 15 sec	250 Vac, 5 A res	Driving – 0.20A, 35W, Holding – 0.14A, 10W	2	By orientation
175 lb-in. 24V Actuators								
MS8120F1002/U	Two position; SPST	24 Vac +20%, -10%	50 Hz; 60 Hz	Driving @ 60 Hz (sec) – 15 sec		Driving – 45 VA, Holding – 10 VA	0	By orientation
MS8120F1200/U	Two position; SPST	24 Vac +20%, -10%	50 Hz; 60 Hz	Driving @ 60 Hz (sec) – 15 sec	250 Vac, 5 A res	Driving – 45 VA, Holding – 10 VA	2	By orientation
80 lb-in. 120V								
MS4120F1006/U	Two position; SPST	120 Vac ±10%	60 Hz	Driving @ 60 Hz (sec) – 15 sec		Driving – 0.35A, 35W, Holding – 0.15A, 10W	0	By orientation
MS4120F1204/U	Two position; SPST	120 Vac ±10%	60 Hz	Driving @ 60 Hz (sec) – 15 sec	250 Vac, 5 A res	Driving – 0.35A, 35W, Holding – 0.15A, 10W	2	By orientation

MS4104F; MS4604F; MS8104F Fast-Acting, Two-Position Actuators, 30 lb-in.

The MS4104, MS4604, and MS8104 Fast-Acting, Two-Position Actuators are spring return direct coupled actuators (DCA) for Fire and Smoke dampers (on/off control). The actuator accepts an on/off signal from a single-pole, single-throw (SPST) controller. Reversible mounting allows actuator to be used for either clockwise (cw) or counterclockwise (ccw) spring rotation.

Dimensions in inches (millimeters)

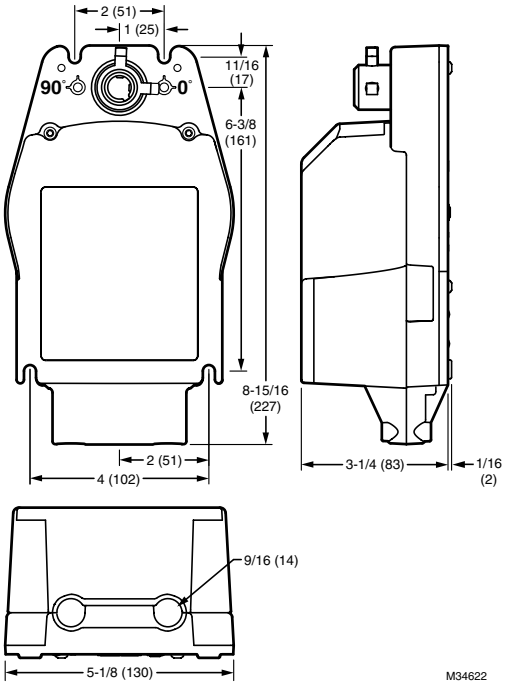

- 30 lb-in. (3.4 N•m) minimum driving torque at 350°F (176°C).
- Reversible mounting facilitates use in either clockwise (cw) or counterclockwise (ccw) spring rotation
- Integral spring return ensures level of return torque
- Fifteen-second spring return timing
- No special cycling required during long-term holding
- No audible noise during holding
- Patent pending design eliminates need for limit switches to reduce power consumption
- Ninety-five degree angle of rotation
- Models available for 24, 120, and 230 Vac.
- Actuator holds rated torque at reduced power level
- Die-cast aluminum housing
- Housing design allows flush mounting to damper
- Designed to operate reliably in smoke control systems requiring Underwriter's Laboratories Inc. UL555S ratings up to 350°F
- Models available with SPST position-indicating switches (7 degree, 85 degree stroke)

Application: Fire and Smoke
Actuator Type: Damper
Control Signal: Two position; SPST
Fail Safe Mode: Spring Return
Torque Rating (lb-in.): 30 lb-in.
Torque Rating (Nm): 3.4 Nm
Spring Return Torque/Force (lb-in., lbf): 30 lb-in.
Spring Return Torque/Force (Nm, N): 3.4 Nm
Additional Torque Ratings (lb-in.): Maximum Stall – 150 lb-in.; Minimum Driving at 350°F – 30 lb-in.
Additional Torque Ratings (Nm): Maximum Stall – 17 Nm; Minimum Driving at 175°C – 3.4 Nm
External Auxiliary Switches Available: No
Stroke: 95 ±3 degrees
Mounting: Direct Coupled
Timing, Nominal: Driving @ 60 Hz – 15 sec
Spring Return Timing: 15 sec
Environmental, Electrical, or Ingress Protection Rating: NEMA 1, IP40
Materials: Aluminum housing
Maximum Noise Rating: Driving (dB(A) @ 1m) – 80; Holding (dB(A) @ 1m) – 20 (no audible noise)
Shaft Adapter Type: Aluminum Hub, two set screws
Shaft Dimensions: 3/8 to 1/2 in. round damper shafts and for 3/8 in. square shafts
Spring Return Direction: By orientation
Weight: 5 lb (2.3 kg)
Approximate, Dimensions: 8.9 in. high x 5.13 in. wide x 3.32 in. deep (227 mm high x 129 mm wide x 84 mm deep)
Ambient Temperature Range: 0°F to +130°F (-18°C to +55°C)
Shipping and Storage Temperature Range: -40°F to 140°F (-40°C to +60°C)
Approvals, Canadian Underwriters Laboratories Inc.: cUL C22.2 No. 24-93
Approvals, C-Tick: N314
Approvals, Underwriters Laboratories Inc.: UL60730, Plenum Rated
Operating Humidity Range (% RH): 5 to 95% RH, non-condensing
Comments: Two integral 3/8 in. clip-in flexible conduit connections

Material Number	Frequency	Switch Ratings	Power Consumption	Internal Auxiliary Switch	Electrical Connections	Electrical Connections Size	Supply Voltage
30 lb-in. 120V							
MS4104F1010/U	60 Hz		Driving – 0.18A, 18W, Holding – 0.11A, 9W	0	Color-coded leads	32 in. (0.8 m)	120 Vac ±10%
MS4104F1210/U	60 Hz	125 Vac/24 Vdc, 3A res	Driving – 0.18A, 18W, Holding – 0.11A, 9W	2	Color-coded leads	32 in. (0.8 m)	120 Vac ±10%
30 lb-in. 230V							
MS4604F1010/U	50 Hz; 60 Hz		Driving – 0.13A, 18W, Holding – 0.10A, 11W	0	Color-coded leads	32 in. (0.8 m)	230 Vac ±10%
MS4604F1210/U	50 Hz; 60 Hz	125 Vac/24 Vdc, 3A res	Driving – 0.13A, 18W, Holding – 0.10A, 11W	2	Color-coded leads	32 in. (0.8 m)	230 Vac ±10%
30 lb-in. 24V Actuators							
MS8104F1010/U	50 Hz; 60 Hz		Driving – 16VA, Holding – 8 VA	0	Color-coded leads	39 in. (1 m)	24 Vac +20%, -10%
MS8104F1210/U	50 Hz; 60 Hz	24 Vac/dc, 3A res	Driving – 16VA, Holding – 8 VA	2	Color-coded leads	39 in. (1 m)	24 Vac +20%, -10%

MS4109F; MS4609F; MS8109F Fast-Acting, Two-Position Actuators, 80 lb-in.

The MS4109, MS4609, and MS8109 Fast-Acting, Two-Position Actuators are spring return direct coupled actuators (DCA) for Fire and Smoke dampers (on/off control). The actuator accepts an on/off signal from a single-pole, single-throw (SPST) controller. Reversible mounting allows actuator to be used for either clockwise (cw) or counterclockwise (ccw) spring rotation.

Dimensions in inches (millimeters)

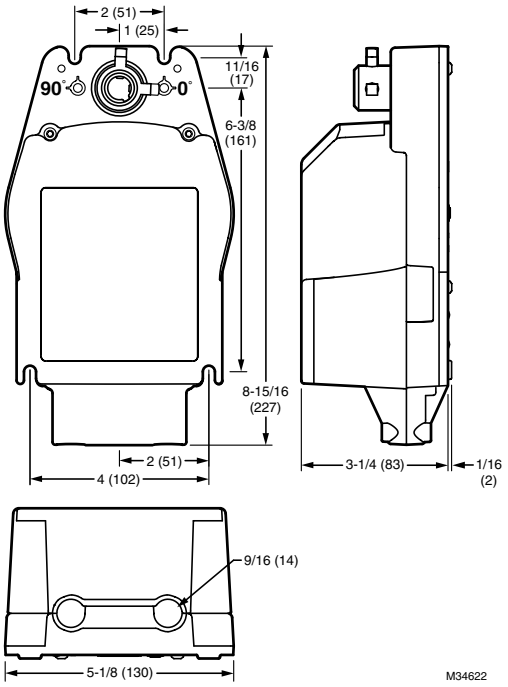

- 80 lb-in. (5.9 N•m) minimum driving torque at 350°F (176°C)
- Reversible mounting facilitates use in either clockwise (cw) or counterclockwise (ccw) spring rotation
- Integral spring return ensures level of return torque
- Fifteen-second spring return timing
- No special cycling required during long-term holding
- No audible noise during holding
- Patent pending design eliminates need for limit switches to reduce power consumption
- Models available for 24, 120, and 230 Vac
- Ninety-five degree angle of rotation
- Actuator holds rated torque at reduced power level
- Die-cast aluminum housing
- Housing design allows flush mounting to damper
- Designed to operate reliably in smoke control systems requiring Underwriter's Laboratories Inc. UL555S ratings up to 350°F
- Models available with SPST position-indicating switches (7 degree, 85 degree stroke)

Application: Fire and Smoke
Actuator Type: Damper
Control Signal: Two position; SPST
Fail Safe Mode: Spring Return
Torque Rating (lb-in.): 80 lb-in.
Torque Rating (Nm): 9 Nm
Spring Return Torque/Force (lb-in., lbf): 80 lb-in.
Spring Return Torque/Force (Nm, N): 9 Nm
Additional Torque Ratings (lb-in.): Maximum Stall – 240 lb-in.; Minimum Driving at 350°F – 80 lb-in.
Additional Torque Ratings (Nm): Maximum Stall – 27 Nm; Minimum Driving at 175°C – 9 Nm
External Auxiliary Switches Available: No
Stroke: 95 ±3 degrees
Mounting: Direct Coupled
Timing, Nominal: Driving @ 60 Hz – 15 sec
Spring Return Timing: 15 sec
Environmental, Electrical, or Ingress Protection Rating: NEMA 1, IP40
Materials: Aluminum housing
Maximum Noise Rating: Driving (dB(A) @ 1m) – 80; Holding (dB(A) @ 1m) – 20 (no audible noise)
Shaft Adapter Type: Aluminum Hub, two set screws
Shaft Dimensions: 3/8 to 1/2 in. round damper shafts and for 3/8 in. square shafts
Spring Return Direction: By orientation
Weight: 5 lb (2.3 kg)
Approximate, Dimensions: 8.9 in. high x 5.13 in. wide x 3.32 in. deep (227 mm high x 129 mm wide x 84 mm deep)
Ambient Temperature Range: 0°F to +130°F (-18°C to +55°C)
Shipping and Storage Temperature Range: -40°F to 140°F (-40°C to +60°C)
Approvals, Canadian Underwriters Laboratories Inc.: cUL C22.2 No. 24-93
Approvals, C-Tick: N314
Approvals, Underwriters Laboratories Inc.: UL60730, Plenum Rated
Operating Humidity Range (% RH): 5 to 95% RH, non-condensing
Comments: Two integral 3/8 in. clip-in flexible conduit connections

Material Number	Frequency	Switch Ratings	Power Consumption	Internal Auxiliary Switch	Electrical Connections	Electrical Connections Size	Supply Voltage
80 lb-in. 120V							
MS4109F1010/U	60 Hz		Driving – 0.25A, 23W, Holding – 0.13A, 7W	0	Color-coded leads	32 in. (0.8 m)	120 Vac ±10%
MS4109F1210/U	60 Hz	125 Vac/24 Vdc, 3A res	Driving – 0.25A, 23W, Holding – 0.13A, 7W	2	Color-coded leads	32 in. (0.8 m)	120 Vac ±10%
80 lb-in. 230V							
MS4609F1010/U	50 Hz; 60 Hz		Driving – 0.13A, 23W, Holding – 0.09A, 7W	0	Color-coded leads	32 in. (0.8 m)	230 Vac ±10%
MS4609F1210/U	50 Hz; 60 Hz	125 Vac/24 Vdc, 3A res	Driving – 0.13A, 23W, Holding – 0.09A, 7W	2	Color-coded leads	32 in. (0.8 m)	230 Vac ±10%
80 lb-in. 24V Actuators							
MS8109F1010/U	50 Hz; 60 Hz		Driving – 23VA, Holding – 7 VA	0	Color-coded leads	39 in. (1 m)	24 Vac +20%, -10%
MS8109F1210/U	50 Hz; 60 Hz	24 Vac/dc, 3A res	Driving – 23VA, Holding – 7 VA	2	Color-coded leads	39 in. (1 m)	24 Vac +20%, -10%

Q7002 Interface Modules

The Q7002 Interface Modules allow controllers with an otherwise incompatible signal to control an Economizer Logic Module or Direct Coupled Actuator.

- 24 Vac or 24 Vdc power.
- Available for input signals: dc voltage, current, or resistive; and pulse-width modulation (PWM).
- Available to provide output: analog voltage or current for an actuator.
- Inputs and outputs are jumper-selectable and include adjustable zero and span.
- Output is jumper-selectable direct or reverse acting.
- Includes reference voltage and current to power an input device or sensor.
- PWM time base is user-selectable with positive or negative input reference; all ranges have 255-step resolution.
- Multiplex mode enables one PWM signal from a Building Automation System (BAS) controller to address and control up to eight interface modules.

Frequency: 60 Hz
Mounting: Enclosure (NEMA 1) with mounting tabs
Used With: Direct-Coupled Proportional Actuators and Modutrol Motors

Dimensions in inches (millimeters)

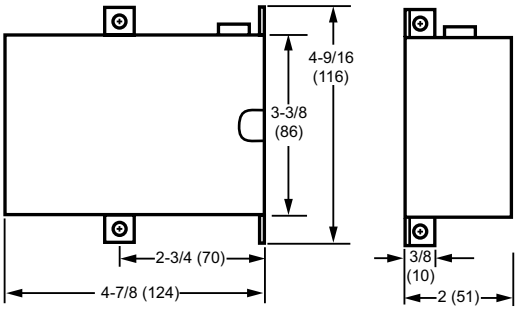

ENCLOSURE MODELS M18985

Material Number	Description	Comments	Supply Voltage
Q7002B1009/U	Transducer, Accepts dc voltage, current, or resistive input and provides a voltage or current output	Input: dc voltage, current, or resistive, Output: voltage or current output	24 Vac ±20%; 24 Vdc
Q7002C1007/U	Transducer, Accepts a pulse-width modulation (PWM) signal and provides a voltage output	Input: PWM signal, Output: analog voltage	24 Vac ±20%; 24 Vdc

Accessories for Direct Coupled Damper Actuators

Compatibility Chart		SPRING RETURN									NON-SPRING RETURN					
ACTUATOR ACCESSORIES		MSxx03A, MSxx05A*	MSxx10A	MSxx20A	MLxx75	MLxx85	MLxx95	ML41x5, ML81x5	MSxx09F	MSxx20F	MLxx61, MLxx74	MNxx05, MNxx10	MNxx20A	MNxx34A	MLxx84	MLxx94
Control, Positioning, Feedback																
SW2-US	Auxiliary Switch (2 SPDT)		•	•								•	•	•		
32003532-005	High Temperature Auxiliary Switch (2 SPDT)							•	•							
200976C	Feedback Potentiometer (2000 ohm)										•					
200976A	Feedback Potentiometer (500 ohm)										•					
205860	Minimum Position Potentiometer	•	•	•	•	•	•				•	•	•	•	•	•
32006306-001	Resistor Kit (500 ohm); converts 4-20 mA signal to 2-10 Vdc	•	•	•	•	•	•				•				•	•
Q7002B1009	Universal Interface Module (Enclosed)	•	•	•	•	•	•				•	•	•	•	•	•
Mounting																
32007205-001	Actuator Mounting Plate	•	•	•	•	•	•	•	•	•	•	•	•	•	•	•
32007205-002	Damper Blade Drive Lever (<24 in.)	•	•	•	•	•	•	•	•	•	•	•	•	•	•	•
32007205-003	Damper Blade Drive Lever (>24 in.)	•	•	•	•	•	•	•	•	•	•	•	•	•	•	•
32007205-004	Damper External Drive Pin Clip	•	•	•	•	•	•	•	•	•	•	•	•	•	•	•
32007205-005	Damper External Drive Pin Kit	•	•	•	•	•	•	•	•	•	•	•	•	•	•	•
32007205-008	Damper Axle Coupler	•	•	•	•	•	•	•	•	•	•	•	•	•	•	•
32007205-009	Crank Arm (1 in.)	•	•	•	•	•	•	•	•	•	•	•	•	•	•	•
50001194-001	Foot Mounting Kit	•	•	•	•	•	•					•	•	•	•	•
205649	Mounting Bracket							•	•	•						
205784	Mounting Bracket				•	•										
50006427-001	Flexible Anti-rotation Bracket		•	•						•			•	•		
50000407-001	Tandem Mounting Kit		•	•									•	•		
STRN-BRKT	Anti-rotation Bracket	•														
STRN-CRK-01	Crank Arm Kit	•														
STRN-ECONO-01	Economizer Retrofit Kit	•														
STRN-WMK-01	Wall Mount Kit	•														
Rotation Limiters, Position Indicators																
4074ENJ	Stroke Stop/Minimum Position Kit										•					
4074ENY	Stroke Stop Kit										•					
Ball Joints, Push Rods																
103598	Ball Joint (1/4 in.)	•	•	•	•	•	•	•	•	•	•	•	•	•	•	•
27518	Ball Joint (5/16 in.)	•	•	•	•	•	•	•	•	•	•	•	•	•	•	•
27520Q	Push Rod (5/16 in. dia., 8 in. length)	•	•	•	•	•	•	•	•	•	•	•	•	•	•	•
27520B	Push Rod (5/16 in. dia., 10 in. length)	•	•	•	•	•	•	•	•	•	•	•	•	•	•	•
27520C	Push Rod (5/16 in. dia., 12 in. length)	•	•	•	•	•	•	•	•	•	•	•	•	•	•	•
27520E	Push Rod (5/16 in. dia., 18 in. length)	•	•	•	•	•	•	•	•	•	•	•	•	•	•	•
27520G	Push Rod (5/16 in. dia., 24 in. length)	•	•	•	•	•	•	•	•	•	•	•	•	•	•	•
27520K	Push Rod (5/16 in. dia., 36 in. length)	•	•	•	•	•	•	•	•	•	•	•	•	•	•	•
27520L	Push Rod (5/16 in. dia., 48 in. length)	•	•	•	•	•	•	•	•	•	•	•	•	•	•	•

Direct Coupled Actuators - Accessories

Compatibility Chart		SPRING RETURN									NON-SPRING RETURN					
ACTUATOR ACCESSORIES		MSxx03A, MSxx05A*	MSxx10A	MSxx20A	MLxx75	MLxx85	MLxx95	ML41x5, ML81x5	MSxx09F	MSxx20F	MLxx61, MLxx74	MNxx05, MNxx10	MNxx20A	MNxx34A	MLxx84	MLxx94
Crankarms																
205685	Crank Arm Kit														•	
205846	Crank Arm Kit															•
26026G	Damper Crank Arm, 1/2 in. damper shaft	•	•	•	•	•	•	•	•	•	•	•	•	•	•	•
205830A	Rotary-to-Linear Kit				•	•					•					
205870	Shaft Adapter 1 in. with Crank Arm				•	•										
STRN-CA-01	Non-Self-centering Crank Arm	•														
STRN-CA-02	Self-centering Crank Arm	•														
Shaft Adapters																
205849A	Hub Insert 5/8 in.															•
32003167-001	Shaft Adapter (3/8 in.)										•					
32003168-001	Short Shaft Adapter (3/4-1/2 in.)	•	•	•	•	•	•	•	•	•	•	•	•	•	•	•
32003168-002	Short Shaft Adapter (5/8-1/2 in.)	•	•	•	•	•	•	•	•	•	•	•	•	•	•	•
32003168-003	Short Shaft Adapter (9/16-1/2 in.)	•	•	•	•	•	•	•	•	•	•	•	•	•	•	•
32003168-004	Shaft Adapter (1/2 – 1/2 in.)	•	•	•	•	•	•	•	•	•	•	•	•	•	•	•
32004254-003	Self Centering Shaft Adapter											•	•			
32004254-002	Self Centering Shaft Adapter		•	•												
32004254-001	Self Centering Shaft Adapter											•		•		
4074EVK	Short Shaft Kit										•					
STRN-SCSA	Self-centering Shaft Adapter	•														
Enclosures																
32003036-001	Weather Enclosure	•	•	•	•	•	•	•	•	•	•	•	•	•	•	•
50005859-001	NEMA 4 Enclosure	•	•	•	•	•	•	•	•	•	•	•	•	•	•	•
7640QW	Metal Enclosure										•					
Miscellaneous																
32000085-001	Strain Relief Fitting (10 pack)	•	•	•								•	•	•		
AT120A1004	120 to 24 Vac Transformer (20 VA)	•	•	•	•	•	•	•	•	•	•	•	•	•	•	•
AT140A1000	120 to 24 Vac Transformer (40 VA)	•	•	•	•	•	•	•	•	•	•	•	•	•	•	•
STRN-STRNRLF	Strain Relief Fitting (10 pack)	•														

Control, Positioning, Feedback Accessories

Material Number	Description	Used With	
200976A/U	Auxiliary Feedback Potentiometer (0 to 500 ohm) Used With: ML6161, ML6174, ML7161, ML7174	ML6161, ML6174, ML7161, ML7174	
200976C/U	Auxiliary Feedback Potentiometer (0 to 2000 ohm) Used With: ML6161, ML6174, ML7161, ML7174	ML6161, ML6174, ML7161, ML7174	
205860/U	Electronic Remote Minimum Position Potentiometer Used With: Proportional Actuators	Proportional Actuators	
32003532-005/U	Switch Assembly for ML4125 including Hub - 32003528-003, Base - 32003530-001, Fitting - 32004453-001, Cable Assembly - 32006750-001, UPC Label - 32004785-003, Label - 32004454-001, Housing - 32003526-002, Cover - 32003527-002	ML4105, ML8105, ML4115, ML8115, ML4125, ML8125, ML4135, ML8135, MS4209, MS4309, MS4709, MS4809, MS8209, MS8309	
32006306-001/U	Resistor Kit (500 ohm, converts 4-20 mA to 2-10 Vdc)	Proportional Actuators	
SW2-US	Auxiliary Switch Package - Spring Return (MS) and High Torque Non Spring (MNXX20 and XX34)	Not for use with Fire and Smoke Actuators, for example MS4120F; MS and MN Series High Torque Actuators (MNXX20 and XX34)	

Mounting Accessories

Material Number	Description	Used With	
205649/U	Mounting Bracket Used With: 150 and 300 lb-in. NSR and SR Actuators	150 and 300 lb-in. NSR and SR (except 25, 53 and 142 lb-in.) Actuators	
32007205-001/U	Direct Coupled Actuator Mounting Bracket Used With: Damper with External Actuator Mounting (i.e., 32007205-005 Kit)	Damper with External Actuator Mounting (i.e., 32007205-005 Kit)	
32007205-002/U	Damper Blade Drive Lever (Small) Used With: All Actuators and Dampers	All Actuators and Dampers	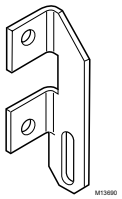
32007205-003/U	Damper Blade Drive Lever (Large) Used With: All Actuators and Dampers	All Actuators and Dampers	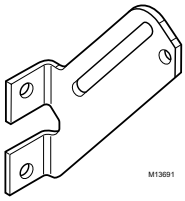
32007205-004/U	Retaining Clip, Damper External Drive Pin Used With: Damper with External Actuator Mounting (i.e., 32007205-005 Kit)	Damper with External Actuator Mounting (i.e., 32007205-005 Kit)	
32007205-005/U	Damper External Drive Pin Kit Used With: Damper with External Actuator Mounting (i.e., 32007205-005 Kit)	Damper with External Actuator Mounting (i.e., 32007205-005 Kit)	
32007205-006/U	Damper Axle Coupling Used With: Multi-Section Dampers	Multi-Section Dampers	
32007205-007/U	Jumper Bracket Used With: Multi-Section Dampers	Multi-Section Dampers	
50000407-001/U	Actuator Tandem Mounting Kit	N20 Actuators; N34 Actuators; S20 Actuators; S10 Actuators; S05 Actuators	

Material Number	Description	Used With	
50001194-001/U	Foot Mounting Kit	MS and MN Series High Torque Actuators (MNXX20 and XX34)	
50006427-001/U	Flexible Anti-Rotation Bracket	N20 Actuators; N34 Actuators; S10 Actuators; S05 Actuators; S20 Actuators	
STRN-BRKT/U	Anti-rotation Bracket for S03 and S05 Series Actuators	S03 Actuators; S05 Actuators	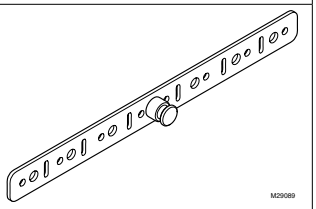
STRN-CRK-01/U	Crank arm kit for S03 and S05 Series Actuators	S03 Actuators; S05 Actuators	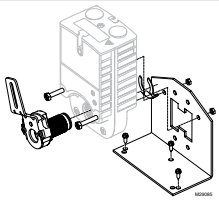
STRN-ECONO-01/U	Economizer Retrofit Kit for S03 and S05 Series Actuators	S03 Actuators; S05 Actuators	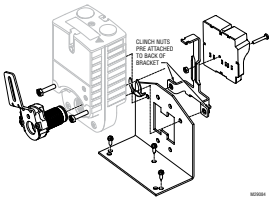
STRN-WMK-01/U	Wall mount kit for S03 and S05 Series Actuators	S03 Actuators; S05 Actuators	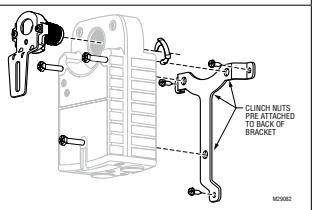

Rotational Limiters, Position Indicators

Material Number	Description	Used With	
4074ENJ/U	Minimum Position Kit Used With: ML6161, ML6174, ML7161, ML7174	ML6161, ML6174, ML7161, ML7174	

Ball Joints, Push Rod Accessories

Material Number	Description	Used With	
27518/U	Crankarm balljoint with 1/4 - 28 UNF male threads, fits 5-16 inch diameter push rods	All Actuators and Dampers	
27520B/U	Push Rod (5/16 in. dia., 10 in. length) Used With: All Actuators and Dampers	All Actuators and Dampers	
27520C/U	Push Rod (5/16 in. dia., 12 in. length)	All Actuators and Dampers	
27520E/U	Push Rod (5/16 in. dia., 18 in. length) Used With: All Actuators and Dampers	All Actuators and Dampers	
27520G/U	Push Rod (5/16 in. dia., 24 in. length)	All Actuators and Dampers	
27520K/U	Push Rod (5/16 in. dia., 36 in. length)	All Actuators and Dampers	
27520Q/U	Push Rod (5/16 in. dia., 8 in. length) Used With: All Actuators and Dampers	All Actuators and Dampers	

3200

Material Number	Description	Used With	
27520L/U	Push Rod (5/16 in. dia., 48 in. length)	All Actuators and Dampers	

Crankarms

Material Number	Description	Used With	
205830A/U	Rotary-to-Linear Kit Used With: 35 and 70 lb-in. NSR Actuators	35 and 70 lb-in. NSR	
26026G/U	Damper Crank Arm, 1/2 in. damper shaft	All Actuators and Damper	
32007205-009/U	Damper Crank Arm, 1” damper shaft Used With: All Actuators and Dampers	All Actuators and Dampers	
STRN-CA-01/U	Non Self-centering Crank Arm for S03 and S05 Series Actuators	S03 Actuators; S05 Actuators	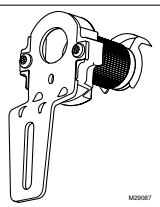
STRN-CA-02/U	Self-centering Crank Arm for S03 and S05 Series Actuators	S03 Actuators; S05 Actuators	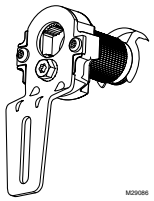

Shaft Adapter Accessories

Material Number	Description	Used With	
172092060	Self-Centering Shaft Adapter Used With N34 Actuators	N34 Actuators	
172092062	Self-Centering Shaft Adapter Used With N20 Actuators	N20 Actuators	
32004254-001/U	Self-Centering Shaft Adapter Used With N20 Actuators	N20 Actuators	
32004254-002/U	Self-Centering Shaft Adapter Used With S10, S20 Actuators	S10 Actuators; S20 Actuators	
32003168-004/U	Shaft Adapter (1/2 – 1/2 in.)	MSxx03A, MSxx05A, MSxx10A, MSxx20a, MLxx75, MLxx85, MLxx95, MI41x5, ML81x5, MSxx09F, MSxx20F, MLxx61, MLxx74, MNxx05, MNxx10, MNxx20A, MNxx34A, MLxx84, MLxx94	
4074ENY/U	3/8 in. Shaft Kit Used With: ML6161, ML6174, ML7161, ML7174	ML6161, ML6174, ML7161, ML7174	
4074EVK/U	Short Shaft Kit Used With: ML6161, ML6174, ML7161, ML7174	ML6161, ML6174, ML7161, ML7174	
STRN-SCSA/U	Self-centering Shaft Adapter for S03 and S05 Series Actuators	S03 Actuators; S05 Actuators	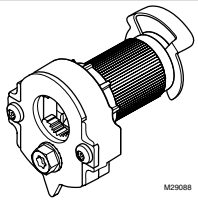 M29088

Enclosure Accessories

Material Number	Description	Used With	
32003036-001/U	Weather Enclosure Used With All Actuators	All Actuators	
50005859-001/U	NEMA 4 Direct Coupled Actuator Enclosure	S03 Actuators; S05 Actuators; S10 Actuators; S20 Actuators; N34 Actuators; 150 lb-in. NSR Actuators (ML Series); N20 Actuators; ML6161, ML6174, ML7161, ML7174	
7640QW/U	Enclosure for Conduit Connection	ML6161, ML6174, ML7161, ML7174	

Rectangular Damper Accessories

Material Number	Description
106783A/U	Damper Crank Assembly for 1/2 inch diameter axle
14000028-001/U	Nylon Bearing
14000644-004/U	Drive Ear for D640 and D641
14004096-001/U	Drive Ear Right
27514B/U	Damper crank arm for 3/4 in. damper shaft

Miscellaneous Accessories

Material Number	Description	Used With	
32000085-001/B	Strain Relief Fitting (10 pack)	MS and MN Series Actuators	
STRN-STRNRLF/U	Strain Relief Fitting (10 pack)	S03 Actuators; S05 Actuators	

JADE™ Economizer Module with sensors and actuators

The JADE™ Economizer System is an expandable economizer control system, which includes a W7220 Economizer Module (controller) with an LCD and keypad. The W7220 can be configured for 4 different economizer strategies: referential or differential dry bulb, referential or differential enthalpy.

The W7220 Economizer Module can be used as a standalone economizer module wired directly to a commercial set back space thermostat and sensors to provide Outdoor Air dry-bulb economizer control.

The W7220 Economizer Module can be connected to optional Sylk Bus sensors for single or differential enthalpy control. The W7220 Economizer Module provides power and communications on the Sylk Bus for the sensors.

The W7220 Economizer Module automatically detects sensors by polling to determine which sensors are present. If a sensor loses communications after it has been detected, the W7220 Economizer indicates a device fail error on the display or through the AUX 1 OUT terminal programmed to SYS.

Voltage: 24 Vac
Frequency: 50 Hz; 60 Hz
Contact Ratings: 30 Vac – 1.5 A Run, 3.5 A Inrush
Operating Temperature Range: -40°F to -150°F (-40°C to +65°C)
Color: Gray
Operating Humidity Range (% RH): 5 to 95% RH, non-condensing
Used With: Honeywell Series 72 actuators; C7232 CO2 sensor

Approvals, Underwriters Laboratories Inc.: Flammability Rating UL94V-5V
Approvals, Others: Complies with California Title 24
Approvals, CE: Approved
Approvals, C-Tick: Approved
Approvals, FCC: Compliant

Material Number	Type	Output	Input	Includes	Comments
W7220A1000/U	DCV and commissioning	2-10 Vdc to actuator	Dry Bulb Temperature (optional) and Mixed Air Sensor-C7250A, Temperature and Humidity Sensor-C7400S1000 (optional), DCV (CO2) Sensor-C7232 (optional)	Logic Module only	The system must have a Mixed Air Sensor and at least one outdoor air sensor to work properly
Y7220A7215/U	Dry Bulb with black motor	2-10 Vdc to actuator	W7220A1000 Logic Module, 2-C7250A1001 OAT & MAT sensors, M7215A1008 Black Motor	Logic Module - W7220A1000, OAT sensor - C7250A1001, MAT Sensor - C7250A1001, and Black Motor - M7215A1008	Output - 2-10 Vdc to actuator
Y7220S7215/U	Enthalpy with black motor	2-10 Vdc to actuator	W7220A1000 Logic Module, C7400S1000 OAE Sensor, C7250A1001 MAT sensor, M7215A1008 Black Motor	Logic Module - W7220A1000, OAE Sensor - C7400S1000, MAT Sensor - C7250A1001, and Black Motor - M7215A1008	Output - 2-10 Vdc to actuator
YL7220AJ3103/U	Dry Bulb with communicating 27 lb-in. DCA	2-10 Vdc to actuator	W7220A1000 Logic Module, 2-C7250A1001 OAT and MAT Sensors, MS3103J1030 DCA OA Sylk	Logic Module - W7220A1000, OAT sensor - C7250A1001, MAT Sensor - C7250A1001, and DCA OA - MS3103J1030	Sylk communicating actuator
YL7220AJ3105/U	Dry Bulb with communicating 44 lb-in. DCA	Sylk communicating actuator	W7220A1000 Logic Module, 2-C7250A1001 OAT and MAT Sensors, MS3105J3030 DCA OA Sylk	Logic Module - W7220A1000, OAT sensor - C7250A1001, MAT Sensor - C7250A1001, and DCA OA - MS3105J3030	Sylk communicating actuator
YL7220SJ3103/U	Enthalpy with communicating 27 lb-in. DCA	2-10 Vdc to actuator	W7220A1000 Logic Module, C7400S1000 OAE Sensor, C7250A1001 MAT Sensor, MS3103J1030 DCA OA Sylk	Logic Module - W7220A1000, OAE Sensor - C7400S1000, MAT Sensor - C7250A1001, and DCA OA - MS3103J1030	Sylk communicating actuator
YL7220SJ3105/U	Enthalpy with communicating 44 lb-in. DCA	Sylk communicating actuator	W7220A1000 Logic Module, C7400S1000 OAE Sensor, C7250A1001 MAT Sensor, MS3105J3030 DCA OA Sylk	Logic Module - W7220A1000, OAE Sensor - C7400S1000, MAT Sensor - C7250A1001, and DCA OA - MS3105J3030	Sylk communicating actuator

Economizer Logic Modules

PC Interface Module

Module used to connect a PC to the W7220A economizer controller. Used for test or setup of multiple systems.

Application: Economizer Module
Voltage: 12-30 Vac
Frequency: 50 Hz; 60 Hz
Approximate, Dimensions: 4.98 inches high x 6.3 inches wide x 1.34 inches deep (126.4 mm high x 160 mm wide x 34 mm deep)
Operating Temperature Range: -40°F to -150°F (-40°C to +65°C)
Used With: JADE (W7220A1000)

Operating Humidity Range (% RH): 5 to 95% RH, non-condensing
Approvals, Underwriters Laboratories Inc.: Flammability Rating UL94V-5V
Approvals, Others: Complies with California Title 24
Approvals, CE: Compliant
Approvals, C-Tick: Approved
Approvals, FCC: Compliant

Material Number	Input	Output	Color	Description
W7220-PCMOD/U	Sylk bus communication to JADE (W7220A1000)	USB connection to a personal computer	Gray	W7220-PCMOD interface module used with JADE (W7220A1000) and Personal Computer

W7215B Enhanced Economizer Logic Modules

Use with C7400A, or C7660 and C7150B or C7046 Sensors; Demand Control Ventilation (DCV) C7232 C02 sensor (2-10 Vdc); and Honeywell Series 72 actuators to proportion air dampers for economizer and ventilation control.

- Input from DCV C02 sensor provides optimum ventilation based on occupancy.
- Includes air change and shutdown.
- Combines enthalpy or dry bulb changeover control, minimum and maximum damper position potentiometer and DCV setpoint functions.
- Optional differential enthalpy control (enthalpy setpoint D with two C7400A sensors) provides greater economizer savings and maximum comfort over single enthalpy control.
- Enthalpy setpoint (A-D) on economizer module controls the combination of air temperature and humidity that is suitable for free cooling.
- LEDs indicates when economizer is in free cooling and DCV modes.
- Provides for input from an outdoor air quality sensor.

Voltage: 24 Vac
Frequency: 50 Hz; 60 Hz
Contact Ratings: 30 Vac – 1.5 A Run, 3.5 A Inrush
Approximate, Dimensions: 8 11/16 in. high x 5 13/16 in. wide x 1 11/16 in. deep (221 mm high x 147 mm wide x 43 mm deep)
Operating Temperature Range: -25°F to +125°F (-32°C to +52°C)
Used With: Honeywell Series 72 actuators
Operating Humidity Range (% RH): 5 to 95% RH, non-condensing
Approvals, Underwriters Laboratories Inc.: UL Listed File: E4436, Guide: XAPX, Meets UL873 plenum requirements

Approvals, C-Tick: Approved

Accessories:
4074EJM/U – Checkout kit for W72xx Economizer Logic Modules. Contains: 1.2K Ohm Checkout Resistor, 620 Ohm resistor, jumper, 5.6K Ohm resistor, 536 Ohm resistor, 665 Ohm resistor, and 3480 Ohm resistor
S963B1128/U – Manual Potentiometer (135 ohm)

Material Number	Input	Output	Use with Sensor	Comments
W7215B1004/U	Discharge Air Temperature sensor: C7150 or C7046; Air Quality Sensor	2-10 Vdc to actuator	C7150; C7046; C7232; C7400A; C7660	Can accept remote minimum position damper position potentiometer and/ or analog input from two carbon dioxide sensors for indoor and outdoor air.; Economizer Logic Module operates Series 72 actuators.

Economizer Parts and Accessories

Material Number	Description	Used With
138823/U	Replacement Knob for H205	H205
198992A/U	620 ohm Resistor Assembly	
4074EJM/U	Checkout kit for W62xx, W72xx Economizer Logic Modules. Contains: 1.2K Ohm Checkout Resistor, 620 Ohm resistor, jumper, 5.6K Ohm resistor, 536 Ohm resistor, 665 Ohm resistor, and 3480 Ohm resistor	W7459; W7210; W7212; W7215
50048926-001/U	W7220 Economizer Edge Connector Bag Assembly - 2 Position - 20 Piece Pack	W7220A1000, C7400S1000, C7250A1001, C7400A2001,
50048926-002/U	W7220 Economizer Edge Connectors - 6 Position - 20 Pieces per pack	W7220A1000
50053060-001/U	Duct mounting kit for 2000 series and Sylk bus enthalpy and humidity sensors	C7400A200X, C7600A200X, C7400S and C7600S sensors

M6415; M7215; M7415; M8405; M8415 Economizer Damper Actuators

Spring return, 25 lb-in. damper actuators provide SPDT floating, two or three position or modulating control of economizer systems, ventilation dampers and combustion air dampers. M6415 suitable for use with direct digital control (DDC) systems.

- Synchronous Motor.
- Spring returns motor shaft to normal position in the event of power failure.
- High impact, glass-fiber reinforced plastic case is rugged, lightweight and corrosion resistant.
- Uses Q298B Linkage.

Frequency: 50 Hz; 60 Hz
Fail Safe Mode: Spring Return
Torque Rating (lb-in.): 25 lb-in.
Torque Rating (Nm): 2.8 Nm
Additional Torque Ratings (lb-in.): Breakaway – 40 lb-in.
Additional Torque Ratings (Nm): Breakaway – 4.5 Nm
External Auxiliary Switches Available: Yes
Stroke: Fixed Stroke; Angle of Rotation – 90 degrees maximum
Electrical Connections: Quick-connect terminals
Mounting: Foot-mounted
Timing, Nominal: Opening – 90 sec
Timing: Minimum – 90 sec, Run Time Maximum – 90 sec
Spring Return Timing: Nominal – 18 sec
Feedback: No

Materials: UL94-5V plastic housing
Motor shafts: 1
Deadweight Load on Shaft: Power End – 15 lbs max
Weight (lb): 3 lb
Approximate, Dimensions: 4 1/2 in. high x 5 in. wide x 5 3/16 in. deep (114 mm high x 127 mm wide x 132 mm deep)
Operating Temperature Range: -25°F to +125°F (-32°C to +52°C)
Shipping and Storage Temperature Range: -30°F to +150°F (-34°C to +66°C)
Approvals, Underwriters Laboratories Inc.: Listed File: E4436, Guide: XAPX
Operating Humidity Range (% RH): 5 to 95% RH, non-condensing
Comments: Vibration – V2 level

Dimensions in inches (millimeters)

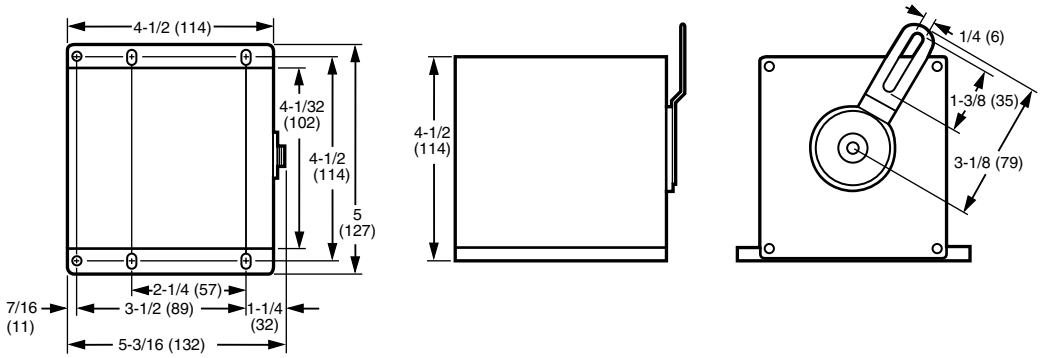

Material Number	Control Signal	Power Consumption	Rotation to Open	Description	Used With
M6415A1016/U	Floating; SPDT	Driving – 8 VA, Holding – 3 VA	CCW	Spring return-foot mounted, SPDT floating, 24 Vac	Floating Controllers
M7215A1008/U	2 to 10 Vdc	Driving – 8 VA, Holding – 3 VA	CCW	Spring return-foot mounted, Modulating, 24 Vac	W7212/13/14 Economizers; W7215 Economizers
M7415A1006/U	Thermistor, Modulating	Driving – 8 VA, Holding – 5 VA	CCW	Spring return-foot mounted, Modulating, 24 Vac	W7459 Economizers; W7460 Economizers
M7415B1004/U	Thermistor, Modulating	Driving – 8 VA, Holding – 5 VA	CW	Spring return-foot mounted, Modulating, 24 Vac	W7459 Economizers; W7460 Economizers
M8405A1006/U	Three position	Driving – 8 VA, Holding – 3 VA	CCW	Spring return-foot mounted, 3 position w/field adj. min pos., 24 Vac	W7459C
M8415A1004/U	Two position, SPST	Driving – 8 VA, Holding – 3 VA	CCW	24 Vac Spring return-food mounted, 2 position, 2 wire w/field adj. aux switch	

Economizer Damper Actuators

Q769 Signal Adapters

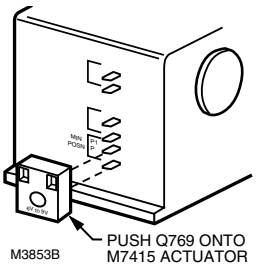

Q769 Adapter is used to provide a modulating signal to the M7415 Economizer Damper Motor when used with a controller.

NOTE: Do not use with a Jade (W7220) economizer.

Electrical Connections: Quick-connect terminals
Approximate, Dimensions: 1 3/8 in. high x 1 3/8 in. wide x 11/16 in. deep (35 mm high x 35 mm wide x 17 mm deep)
Operating Temperature Range: -25°F to +125°F (-32°C to +52°C)

Material Number	Control Signal	Description	Used With
Q769A1009/U	6 to 9 Vdc	6 to 9 volt Adapter	M7415
Q769B1008/U	4 to 20 mA	4 to 20 mA Adapter	M7415
Q769C1007/U	0 to 10 Vdc	0-2 to 10 Vdc Adjustable Adapter	M7415

Economizer Actuator Accessories

Material Number	Description	Used With	
4074EGR/U	Crank arm assembly	M6415; M7215; M7415; M8405; M8415	
4074EKV/U	24 Vac Auxiliary switch which provides switching capability for controlling auxiliary equipment	M6415; M7215; M7415; M8405; M8415	
Q709A1005/U	A minimum pos. potentiometer designed for mounting directly on the M7405/M7415 actuators. Provides min pos. setting for dampers and has quick connects for series connection of remote min pos. potentiometer override.	M7405; M7415 Do not use with a Jade (W7220) economizer	

C7150 Mixed Air Sensor

C7150 Solid State mixed air sensor is used with Honeywell economizer logic modules to proportion outdoor and return air dampers in economizer systems.

- Uses thermistor sensing element in ventilation duct systems.
- Negative temperature coefficient (NTC) causes resistance to decrease as sampled air temperature increases.
- Requires no settings or calibration.
- Mounts on duct surface with four screws (not supplied).

Sensor: 3000 ohms @ 25C NTC
Color: Black
Mounting: Mount on a mounting bracket (not included) inside the mixed air or discharge air duct.
Operating Temperature Range: 40°F to 110°F (4°C to 43°C)

Approximate, Dimensions: 2 in. high x 2 1/2 in. wide x 3/4 in. deep (51 mm high x 64 mm wide x 19 mm deep)
Electrical Connections: 1/4 in. (6 mm) quick-connect terminals.
Approvals, Underwriters Laboratories Inc.: Component Recognized
Approvals, CE: Report: GV97-011

Material Number	Application	Ambient Temperature Range	Description	Used With
C7150B1004/U	Temperature Mixed Air Sensor for Duct mixed or discharge air	121°C Maximum (250°F Maximum)	Mixed Air Sensor for duct or discharge dire with a 3000 ohms @ 25C NTC sensor	W973 and M7415; W7210, W7212, W7213, W7214, W7215, W7459, W7460

C7250 Temperature Sensor

The C7250 Mixed Air sensor is designed for use as a 20K input to a controller for mixed air temperature in rooftop packaged air conditioning equipment.

A separate controller such as the JADE™ Economizer System (Model W7220) provides power and communications for the C7250 Mixed Air sensor.

Sensor: 20K NTC
Color: Gray
Mounting: Mounted in any position where it is exposed to freely circulating air
Operating Humidity Range (% RH): 11 to 89% RH
Operating Temperature Range: -40°F to 150°F (-40°C to 66°C)

Approximate, Dimensions: 4.25 in. high x 2.17 in. wide x .81 in. deep (108 mm high x 55 mm wide x 20.5 mm deep)
Electrical Connections: 2-pin header-pin style or 2-pin card edge removable terminal blocks
Approvals, Underwriters Laboratories Inc.: Component Recognized

Material Number	Application	Ambient Temperature Range	Description	Used With
C7250A1001/U	Electronic 20K temperature sensor for a 20K temperature sensor intended for sensing mixed or discharge air in rooftop packaged air conditioning equipment. Used with a W7220 economizer controller.	66°C Maximum (150°F Maximum)	A 20K temperature sensor intended for sensing mixed or discharge air in rooftop packaged air conditioning equipment. Used with a W7220 economizer controller. Sold in bulk packs.	W7220

C7400A Enthalpy Sensor

Analog enthalpy sensor for use with W7212 and W7459 economizer controllers.

- C7400 solid state elements sense enthalpy (temperature and humidity); use two sensors for differential control, maximizing energy savings.
- Use one sensor in outdoor air for single sensor control; use two sensors, one in return air and one in outdoor air, for differential control.
- C7400 mount in any position up to 200 ft (61 m) away from Economizer Logic Module.
- UL94-5V enclosure.

Sensor: 4-20 mA output
Color: Gray
Mounting: Mounted in any position where it is exposed to freely circulating air
Operating Humidity Range (% RH): 11 to 89% RH
Operating Temperature Range: -40°F to 150°F (-40°C to 66°C)

Approximate, Dimensions: 4.25 in. high x 2.17 in. wide x .81 in. deep (108 mm high x 55 mm wide x 20.5 mm deep)
Electrical Connections: Two 1/4 in. quick-connect terminals
Approvals, Underwriters Laboratories Inc.: Component Recognized

Material Number	Application	Ambient Temperature Range	Description	Used With
C7400A2001/U	Enthalpy economizing Sensor for a solid state enthalpy sensor designed to sense temperature and humidity with 5% accuracy	66°C Maximum (150°F Maximum)	Enthalpy Sensor for supply duct or return air with a 4-20 mA output sensor. Sold in Bulk Packs.	W7210, W7212A, W7213, W7214, W7215, W7459, W7460

C7400S Enthalpy Sensor

Digital enthalpy (humidity/temperature) sensor for use with S-Bus devices and W7220 economizer controller.

- This unit mounted C7400S enthalpy sensor includes solid state temperature and humidity sensors.
- Outputs a digital communicating signal on a two-wire Sylkbus communications link, reporting the temperature and humidity separately to the controller.
- The controller determines the enthalpy (total heat), enabling economizer modes of operation when outside air enthalpy is suitable for free cooling.
- When used with an economizer, the enthalpy boundary curve is programmed via the controller. When the temperature and humidity are determined to be suitable based on the relationship to the boundary, the controller allows outside air for economizing.
- Ambient temperature operating range from -40°F to 150°F.
- Dual enthalpy sensors in outside air and return switches the controllers to economizer mode of operation anytime the outside enthalpy is less than the return air enthalpy.
- UL recognized component (Guide info XAPX).

Sensor: 7-21Vdc
Color: Gray
Mounting: Mounted in any position where it is exposed to freely circulating air
Operating Humidity Range (% RH): 10 to 90% RH
Operating Temperature Range: -40°F to 150°F (-40°C to 66°C)

Approximate, Dimensions: 4.25 in. high x 2.17 in. wide x .81 in. deep (108 mm high x 55 mm wide x 20.5 mm deep)
Electrical Connections: 2-pin header-pin style or 2-pin card edge removable terminal blocks
Approvals, Underwriters Laboratories Inc.: Component Recognized

Material Number	Application	Ambient Temperature Range	Description	Used With
C7400S1000/U	Provides Honeywell Sylkbus signal in relation to enthalpy - 5% accuracy sensor for a solid state enthalpy sensor designed to sense temperature and humidity with 5% accuracy. Use with W7220 economizer control, for use in outdoor air intakes of HVAC rooftop.	66°C Maximum (150°F Maximum)	S-Bus Enthalpy Sensor for supply duct or return air with Sylkbus Communication Protocol. Sold in Bulk Packs.	W7220

C7600 Humidity Sensor for Economizers

The C7600A,C Solid State Humidity Sensors sense relative humidity in air and are used with controllers that can process a 4 to 20 mA signal.

- Sensor enclosed in rugged glass-fiber reinforced plastic case.
- Compact size and lightweight construction for easy mounting in duct or on wall.
- Cover vents allow airflow to humidity sensing element inside.
- 4 to 20 mA output to relative air humidity.
- Can be used indoors or outdoors.
- The C7600A provides 4-20 mA output inversely proportional to air relative humidity.
- The C7600C provides 4-20 mA output directly proportional to air relative humidity.

Sensor: 4-20 mA output
Color: Gray
Mounting: Mounted in any position where it is exposed to freely circulating air
Operating Humidity Range (% RH): 10 to 90% RH
Operating Temperature Range: -40°F to 150°F (-40°C to 66°C)

Approximate, Dimensions: 4.25 in. high x 2.17 in. wide x .81 in. deep (108 mm high x 55 mm wide x 20.5 mm deep)
Electrical Connections: Two 1/4 in. quick-connect terminals
Approvals, Underwriters Laboratories Inc.: Component Recognized

Material Number	Application	Ambient Temperature Range	Description	Used With
C7600A2008/U	Solid State Humidity Sensor for Solid state humidity sensor sense relative humidity in air	66°C Maximum (150°F Maximum)	Humidity Sensor senses relative humidity in air.	W7600 or controller requiring 4-20 mA reverse acting input
C7600C2001/U	Solid State Humidity Sensor for Solid state humidity sensor sense relative humidity in air	66°C Maximum (150°F Maximum)	Humidity Sensor senses relative humidity in air. Sold in Bulk Packs.	H775 or controller requiring 4-20 mA direct acting input

C7660 Selectable Temperature Sensor

Selectable outdoor temperature sensor for use with W7212 and W7459 economizers for referential dry bulb changeover.

- Senses temperature of outdoor air and provides a signal to economizer control with OK or NOT OK to economize.
- Selectable dip switch provides 8 changeover temperature options.
- When temperature of outdoor air is below changeover temperature, the outdoor air damper is opened to reduce the cooling load in the building.
- Provides 4 OR 20 mA output signal to economizer control; At 4 mA NOT OK to economize, 20 mA OK to economize.
- Highly accurate microprocessor control.
- Sensor is enclosed in a rugged, corrosion-resistant plastic case.
- Replaces C7650 temperature sensors and the control function of temperature changeover in the economizer control.

Sensor: 4 OR 20mA Output
Color: Black
Mounting: Mounted in any position where it is exposed to freely circulating air
Operating Temperature Range: -40°F to 150°F (-40°C to 66°C)

Approximate, Dimensions: 4 5/32 in. high x 3 7/8 in. wide x 1 in. deep (81 mm high x 96 mm wide x 25 mm deep)
Electrical Connections: Two 1/4 in. quick-connect terminals
Approvals, Underwriters Laboratories Inc.: Flammability Rating 94-5V (cUL)

Material Number	Application	Description	Used With
C7660A1000/U	Selectable Temperature Sensor for Duct outside (supply) or return	Dry Bulb Temperature Sensor for supply duct or return air with 4 or 20 mA output signal. Use for referential temperature change over control only - do not use for differential temperature control.	W7210, W7212, W7213, W7214, W7215, W7459, W7460

Modutrol IV™ Family of Motors “Contractor-Friendly” design for service and retrofit

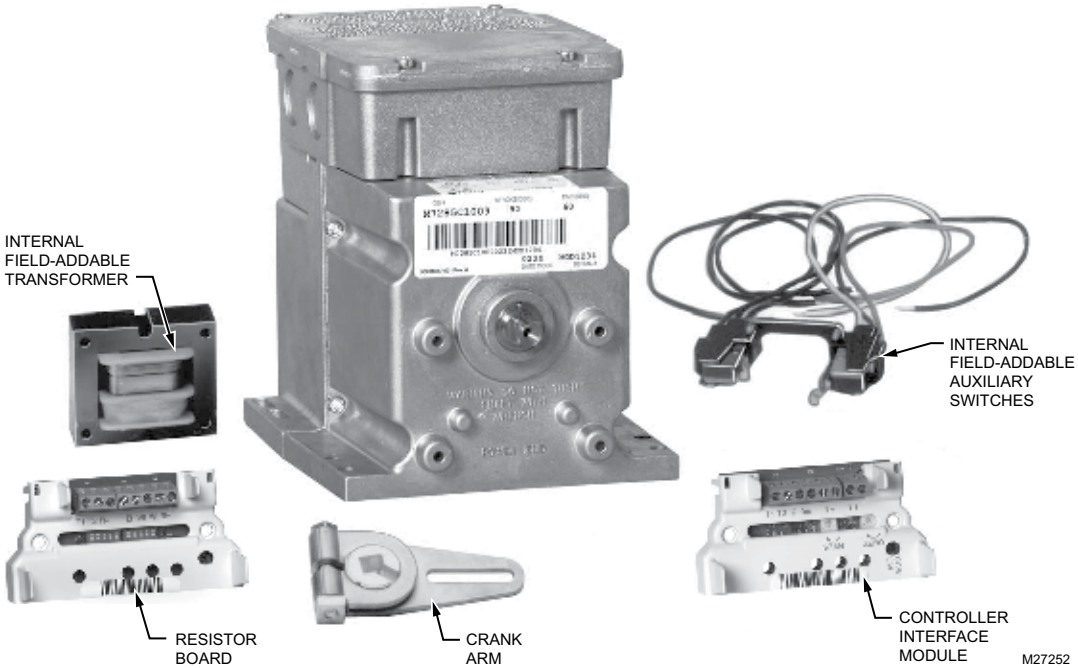

Honeywell Modutrol IV motors, your reliable replacement business solution. Built for decades, with proven durability bringing exceptional performance and technology to meet demanding applications everywhere.

Features and benefits:

1. **Dual shafts.** Slotted and tapped at both ends. Both drive and auxiliary shafts have equal torque ratings, allowing auxiliary shaft to drive full torque loads. This provides a more flexible motor. For example, a spring-return, normally closed motor will provide normally open operation simply by using the auxiliary shaft.
2. **NEMA 3 housing.** Modutrol IV™ motor housings protect the motor from driving rain if motor is mounted in the upright position (as shown in above photo). May be mounted outdoors without a weatherproofing kit.
3. **Brushless DC sub motor** provides a fixed torque over the entire voltage range.
4. **Reduced power consumption.** Motor power needs can always be satisfied with a 20 VA transformer.
5. **Internal design.** Results in improved performance and longer life.
   - Microprocessor based technology eliminates the need for mechanical end stops.
   - Brushless DC sub motor eliminates the need for oil.
6. **Auxiliary Switch cams.** All models have auxiliary switch cams that permit acceptance of 220736A, B Internal Auxiliary Switch Kits.
7. **Field Adjustable stroke.** Most models are field adjustable (i.e. 90 to 160 degrees).

TRADELINE motors and appropriate accessories can be configured to replace all previous Honeywell Modutrol motors, as well as most OEM Modutrol motors. The appropriate accessories are listed with the different models and in tables near the end of this section.

Modutrol IV™ Family of Motors

The following Modutrol IV™ motors can replace the old style Modutrol motors as shown below.

	Mod IV Replacement	Old Motors Replaced
Non-Spring Return	M6184 M6194 M6284 M6294 M7164 M7284 M7294 M9164 M9174 M9184 M9194 M9484 M9494 	M644 M744 M941 M944 M954 M734 M934
Spring Return	M4185 M6285 M7285 M7286 M7685 M8185 M9185 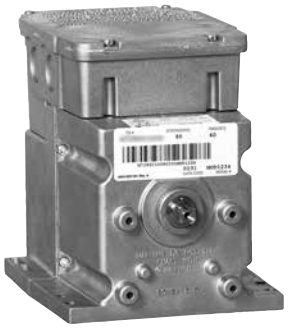	M445 M745 M845 M945 M955
Medium Torque Spring Return	M9175 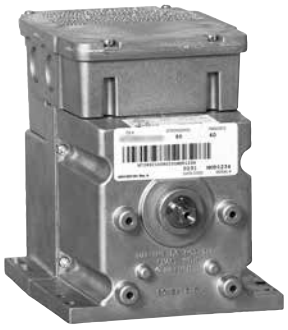	M765 M865 M965 M975

The Honeywell Family of Modutrol IV™ Motors

Actuator	Voltage Vac			Stroke	Timing	Control Input			Torque (lb-in.)					Spring Return	Recommended Controller
	24[a]	120	230			On/Off	SPDT Floating	Modulating	35	60	75	150	300		
*TRADELINE models.															
M4185A1001/U		●		90-160	30-60	●				●				●	T775; T4031
M4185B1009/U		●		90-160	30-60	●				●				●	T775; T4031
M4185B1058/U	●	●	●	90-160	30-60	●				●				●	T775; T4031
M4185C1007/U	●	●		90-160	30-60	●				●				●	T775; T4031
M6184A1015/U	●			90-160	30-60		●					●			T775; T675; T678; T6031
M6184A1023/U		●		90-160	15-30		●				●				T775; T675; T678; T6031
M6184D1001/U	●			90-160	15-30		●				●				T775; T675; T678; T6031
***M6184D1035/U**	●			90-160	30-60		●					●			T775; T675; T678; T6031
M6184D1068/U	●			90-160	120-240		●					●			T775; T675; T678; T6031
M6184F1014/U	●			90-160	30-60		●					●			T775; T675; T678; T6031
***M6194B1011/U**	●			90-160	60-120		●						●		T775; T675; T678; T6031
***M6194D1017/U**	●			90-160	120-240		●						●		T775; T675; T678; T6031
M6194E1006/U	●			90-160	120-240		●						●		T775; T675; T678; T6031
M6284A1055		●		90-160	30-60		●					●			T775; T675; T678; T6031
M6284A1071		●		90-160	30-60		●					●			T775; T675; T678; T6031
***M6284D1000**	●			90-160	30-60		●					●			T775; T675; T678; T6031
***M6284D1026**	●			90-160	30-60		●					●			T775; T675; T678; T6031
M6284F1013	●			90-160	30-60		●					●			T775; T675; T678; T6031
***M6285A1005**	●			90-160	30-60		●			●				●	T775; T675; T678; T6031
M6285C1001	●			90-160	30-60		●			●				●	T775; T675; T678; T6031
***M6294D1008**	●			90-160	120-240		●						●		T775; T675; T678; T6031
M7164A1017/U[b]	●			90-160	30-60			10.5-13.5 Vdc	●						T775; W7080
M7164G1030/U[b]		●		90-160	30-60			10.5-13.5 Vdc	●						T775; W7080
M7284A1004/U[b]		●		90-160	30-60			4-20 mA				●			T775, EXCEL 5000
M7284A1012/U[b]		●		90-160	30-60			4-20 mA				●			T775, EXCEL 5000
M7284A1038/U[b]		●		90-160	15-30			4-20 mA			●				T775, EXCEL 5000
M7284A1079/U[b]	●			90-160	30-60			2-10 Vdc				●			T775, EXCEL 5000
M7284C1000/U[b]		●		90-160	30-60			4-20 mA				●			T775, EXCEL 5000
M7284C1083/U	●			90	30		●	4-20 mA				●			DDC
M7284C1091/U	●			160	60		●	4-20 mA				●			DDC
M7284Q1009/U[b]		●		90-160	30-60			4-20 mA				●			T775, EXCEL 5000
M7284Q1082/U	●			90	30		●	4-20 mA				●			DDC
M7284Q1090/U	●			160	60		●	4-20 mA				●			DDC
M7285A1003/U[b]		●		90-160	30-60			4-20 mA		●				●	T775, EXCEL 5000
M7285A1045/U[b]	●			90-160	30-60			2-10 Vdc		●				●	T775, EXCEL 5000
M7285C1009/U[b]		●		90-160	30-60			4-20 mA		●				●	T775, EXCEL 5000
M7285Q1008/U[b]		●		90-160	30-60			4-20 mA		●				●	T775, EXCEL 5000
M7286G1009/U[b]	●			90-160	30-60			2-10 Vdc		●				●	T775, EXCEL 5000
M7294A1010/U[b]	●			90-160	60-120			2-10 Vdc					●		T775, EXCEL 5000
M7294Q1007/U[b]		●		90-160	60-120			4-20 mA					●		T775, EXCEL 5000
M7685A1025/U[b,c]	●			90-160	30-60			14-17 Vdc		●				●	T775; W7080
***M8185D1006/U**	●			90-160	30-60	●				●				●	T775
M9164A1005/U		●		90-160	30-60			135 ohm	●						T775; T915; T991

[a] All 24 Vac Modutrol motors have CE approval.
[b] Available only through Honeywell Authorized Distributors.
[c] Includes minimum position potentiometer.

Actuator	Voltage Vac			Stroke	Timing	Control Input			Torque (lb-in.)					Spring Return	Recommended Controller
	24[a]	120	230			On/Off	SPDT Floating	Modulating	35	60	75	150	300		
*TRADELINE models.															
M9164A1013/U	●	●	●	90-160	30-60			135 ohm	●						T775; T915; T991
M9164A1070/U	●			90-160	30-60			135 ohm	●						T775; T915; T991
M9164C1001/U	●			90-160	30-60			135 ohm	●						T775; T915; T991
M9164C1068/U		●		90-160	30-60			135 ohm	●						T775; T915; T991
***M9164D1009/U**	●			90-160	30-60			135 ohm	●						T775; T915; T991
M9174B1027/U		●		90-160	30-60			135 ohm			●				T775; T915; T991
M9174C1025/U		●		90-160	30-60			135 ohm			●				T775; T915; T991
M9174C1033/U		●		90-160	30-60			135 ohm			●				T775; T915; T991
***M9174D1007/U**	●			90-160	30-60			135 ohm			●				T775; T915; T991
M9184A1019/U	●			90-160	30-60			135 ohm				●			T775; T915; T991
M9184C1031/U	●			90-160	30-60			135 ohm				●			T775; T915; T991
M9184D1005/U	●			90-160	15-30			135 ohm			●				T775; T915; T991
***M9184D1021/U**	●			90-160	30-60			135 ohm				●			T775; T915; T991
M9184F1034/U	●			90-160	30-60			135 ohm				●			T775; T915; T991
M9185A1018/U	●			90-160	30-60			135 ohm		●				●	T775; T915; T991
M9185C1006/U	●			90-160	30-60			135 ohm		●				●	T775; T915; T991
***M9185D1004/U**	●			90-160	30-60			135 ohm		●				●	T775; T915; T991
M9185E1019/U	●			90-160	30-60			135 ohm		●				●	T775; T915; T991
***M9194D1003/U**	●			90-160	120-240			135 ohm					●		T775; T915; T991
M9194E1000/U	●			90-160	120-240			135 ohm					●		T775; T915; T991

[a] All 24 Vac Modutrol motors have CE approval.
[b] Available only through Honeywell Authorized Distributors.
[c] Includes minimum position potentiometer.

Modutrol IV™ Motor Order Number Guide

M9184D1021

OUTPUT DRIVE

	ROTATION	ACTION	SHAFT
4		NON-SPRING RETURN	DUAL-ENDED SHAFT
5	N.O.	SPRING RETURN	
6	N.O.		
1		NON-SPRING RETURN	
2	N.O.	SPRING RETURN △1	

SPECIFICATION NUMBER

FURTHER IDENTIFIES MOTOR

CONTROL SERIES (FIRST TWO DIGITS)

41	SERIES 40, TWO-POSITION, LINE VOLTAGE
61	SERIES 60, FLOATING CONTROL
62	SERIES 60, FLOATING WITH FEEDBACK POTENTIOMETER
71	4-7, 6-9, 10.5-13.5 VDC CONTROL
72	4-20 mA OR 2-10 VDC CONTROL
76	14-17 VDC WITH MINIMUM POSITION
81	SERIES 80, TWO-POSITION, LOW VOLTAGE
91	SERIES 90, PROPORTIONING CONTROL
94	PROPORTIONAL FLAME SAFEGUARD FIRING RATE MOTOR △1

TORQUE DESIGNATION

	TORQUE	
	SPRING RETURN	NON-SPRING RETURN
6	———	35 LB-IN.
7	———	75 LB-IN.
8	60 LB-IN.	150 LB-IN.
9	———	300 LB-IN.

SUFFIX LETTER APPLIES TO ALL MODELS

NUMBER OF AUX. SWITCHES			SPECIAL FUNCTION	STROKE	ELECTRICAL ROTATION
0	1	2			
A	B	C	STANDARD	ADJUSTABLE	N.O.
—	—	Q	ADJ. ZERO AND SPAN		
△1 V	W △2	—	MINIMUM POSITION		
D	E	F	STANDARD	ADJUSTABLE	N.O.
G	—	—	STANDARD	ADJUSTABLE	

△1 MODEL NUMBERS IN SHADED AREAS ARE AVAILABLE SPECIAL ORDER ONLY. CONTACT YOUR HONEYWELL SALES REPRESENTATIVE.

△2 SUFFIX LETTERS IN BOLD ARE OBSOLETE.

M13696A

M4185 Line Volt; M8185 Low Volt Two-Position Modutrol IV™ Motors

Series 41 and Series 81 Modutrol IV motors are 2-position (line- and low-voltage per motor control) spring-return motors. They are used to operate dampers or valves in applications where it is necessary or desirable to have the controlled element return to the starting position in the event of power failure or interruption.

- Fixed torque throughout the entire voltage range
- Integral spring return returns motor to normal position in the event of power failure
- Integral junction box provides NEMA 3 weather protection if motor is mounted in the upright position
- Motor and circuitry operate from 24 Vac
- Quick-connect terminals are standard – screw terminal adapter is available
- Adapter bracket for matching shaft height of older motors is available
- Motors have field adjustable stroke (90 to 160 degrees)
- Motors are designed for either normally open or normally closed valves and damper
- Integral auxiliary switches are available factory mounted, or can be field added
- Motors can operate valve linkages from the power end or auxiliary end shafts for normally closed or normally open valve applications
- All models have dual shafts (slotted and tapped on both ends)

Application: Electric
Control Signal: Two position, SPST
Frequency: 50 Hz; 60 Hz
Fail Safe Mode: Spring Return
Auxiliary Switch Ratings: AFL - 120 Vac – 7.2A; ALR - 120 Vac – 43.2A; AFL - 240 Vac – 3.6A; ALR - 240 Vac – 21.6A
External Auxiliary Switches Available: Yes
Shaft Rotation (upon control signal increase): Clockwise (as viewed from power end) (normally closed)
Electrical Connections: Quick-connect terminals
Mounting: Foot-mounted
Power Consumption: Driving – 20 VA
Timing, Nominal: 30 - 60 sec
Feedback: No
Shaft Dimensions: 0.375 in. Square (10 mm Square)
Motor shafts: 2; Dual-ended shaft
Deadweight Load on Shaft: Either End – 200 lbs.; Combined on both Shafts – 300 lbs.
Approximate, Dimensions: 6 7/16 in. high x 5 1/2 in. wide x 8 3/4 in. deep (164 mm high x 140 mm wide x 222 mm deep)
Ambient Temperature Range: -40°F to +150°F (-40°C to +60°C)
Approvals, Underwriters Laboratories Inc.: Listed: File No. E4436, Guide No. XAPX for USA and Canada
Approvals, CE: EN55011 (Emission) EN50082-2 (Immunity) 73/23/EEC (LVD)
Approvals, RoHS: 2011/65/ES

Accessories:
220736A/U – Internal Auxiliary Switch Assembly - 1 Switch
220736B/U – Internal Auxiliary Switch Assembly - 2 Switches
220738A/U – Adapter Bracket. Adjusts shaft height to match Modutrol III motors
220741A2-TP/U – Screw Terminal Adapter Kit for 2 position Modutrol IV Series 2 motors - Converts quick-connect terminals to screw terminals
221455A/U – Infinitely adjustable Motor Crank Arm
4074ERU/U – Weatherproofing kit. Protects motor from driving rain when mounted in any position. Not needed if motor is mounted upright.
50017460-001/U – 24/120/230 Vac Internal Transformers for Series 2 Motors
50017460-003/U – 120 Vac Internal Transformers for Series 2 Motors

Material Number	Torque Rating (lb-in.)	Torque Rating (Nm)	Supply Voltage	Internal Auxiliary Switch	Factory Stroke Setting	Stroke	Internal Transformer	Weight	Includes	Tradeline Value
M4185A1001/U	60 lb-in.	6.8 Nm	120V	0	160 degrees	Adjustable; 90 to 160 degrees, Asymmetrical	50004263-003	9.5 lb	Transformer	
M4185B1009/U	60 lb-in.	6.8 Nm	120V	1	160 degrees	Adjustable; 90 to 160 degrees, Asymmetrical	50004263-003	9.5 lb	Transformer	
M4185B1058/U	60 lb-in.	6.8 Nm	24V; 120V; 230V	1	90 degrees	Adjustable; 90 to 160 degrees, Asymmetrical	50004263-001	9.5 lb	Transformer	
M4185C1007/U	60 lb-in.	6.8 Nm	120V	2	90 degrees	Adjustable; 90 to 160 degrees, Asymmetrical	50004263-003	9.5 lb	Transformer	
M4185E4006/U	60 lb-in.	6.8 Nm	24V; 120V; 230V	1	160 degrees	Adjustable; 90 to 160 degrees, Asymmetrical	50004263-001	9.5 lb	Transformer	Tradeline
M4185E4014/U	60 lb-in.	6.8 Nm	120V	1	160 degrees	Adjustable; 90 to 160 degrees, Asymmetrical	50004263-003	9.5 lb	Transformer	Tradeline
M8185D1006/U	60 lb-in.	6.8 Nm	24V	0	160 degrees	Adjustable; 90 to 160 degrees, Asymmetrical	None	8.5 lb		Tradeline

Dimensions in inches (millimeters)

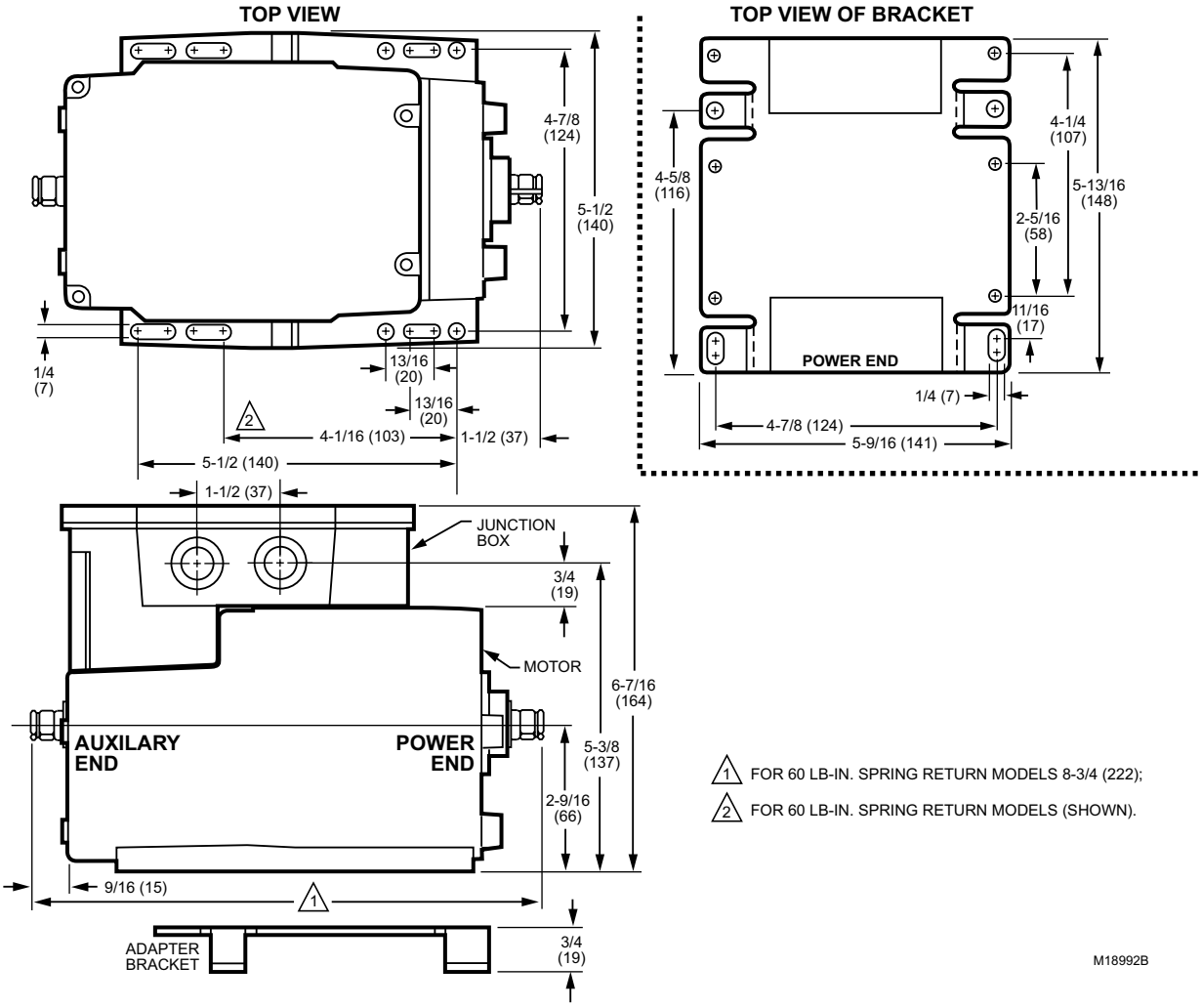

1 FOR 60 LB-IN. SPRING RETURN MODELS 8-3/4 (222);

2 FOR 60 LB-IN. SPRING RETURN MODELS (SHOWN).

Typical connections for Series 41 motors

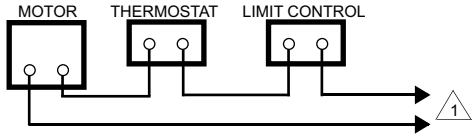

1 POWER SUPPLY. PROVIDE DISCONNECT MEANS AND OVERLOAD PROTECTION AS REQUIRED. M806A

Typical connections for Series 81 motors

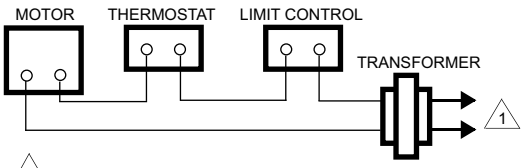

1 POWER SUPPLY. PROVIDE DISCONNECT MEANS AND OVERLOAD PROTECTION AS REQUIRED. M807A

M6184; M6194 Floating Modutrol IV™ Motors

Series 61 Modutrol IV™ Motors non-spring return floating control motors are used with controllers that provide a switched SPDT or floating output to operate dampers or valves.

- Integral junction box provides NEMA 3 weather protection if motor is mounted in the upright position
- Motor and circuitry operate from 24 Vac
- Quick-connect terminals are standard – screw terminal adapter is available
- Adapter bracket for matching shaft height of older motors is available
- Motors have field adjustable stroke (90 to 160 degrees)
- Integral auxiliary switches are available factory mounted, or can be field added
- All models have dual shafts (slotted and tapped on both ends)
- All models have auxiliary switch cams
- Fixed torque throughout the entire voltage range
- Motors are designed for either normally open or normally closed valves and dampers

Application: Electric
Control Signal: Floating
Frequency: 50 Hz; 60 Hz
Fail Safe Mode: Non-Spring Return
Auxiliary Switch Ratings: AFL - 120 Vac – 7.2A; ALR - 120 Vac – 43.2A; AFL - 240 Vac – 3.6A; ALR - 240 Vac – 21.6A
External Auxiliary Switches Available: Yes
Shaft Rotation (upon control signal increase): Dependent on wiring (normally closed)
Electrical Connections: Quick-connect terminals
Mounting: Foot-mounted
Power Consumption: Driving – 15 VA
Feedback: No
Shaft Dimensions: 0.375 in. Square (10 mm Square)
Motor shafts: 2; Dual-ended shaft
Deadweight Load on Shaft: Either End – 200 lbs.; Combined on both Shafts – 300 lbs.
Approximate, Dimensions: 6 7/16 in. high x 5 1/2 in. wide x 7 5/16 in. deep (164 mm high x 140 mm wide x 185 mm deep)
Ambient Temperature Range: -40°F to +150°F (-40°C to +60°C)

Approvals, Underwriters Laboratories Inc.: Listed: File No. E4436, Guide No. XAPX for USA and Canada
Approvals, CE: EN55011 (Emission) EN50082-2 (Immunity) 73/23/EEC (LVD)
Approvals, RoHS: 2011/65/ES

Accessories:
220736A/U – Internal Auxiliary Switch Assembly - 1 Switch
220736B/U – Internal Auxiliary Switch Assembly - 2 Switches
220738A/U – Adapter Bracket. Adjusts shaft height to match Modutrol III motors
220741A2-61/U – Screw Terminal Adapter Series 61 MOD IV Motor
221455A/U – Infinitely adjustable Motor Crank Arm
4074ERU/U – Weatherproofing kit. Protects motor from driving rain when mounted in any position. Not needed if motor is mounted upright.
50017460-001/U – 24/120/230 Vac Internal Transformers for Series 2 Motors
50017460-003/U – 120 Vac Internal Transformers for Series 2 Motors

Material Number	Torque Rating (lb-in.)	Torque Rating (Nm)	Supply Voltage	Timing, Nominal	Internal Auxiliary Switch	Factory Stroke Setting	Stroke	Internal Transformer	Weight	Includes	Comments	Tradeline Value
M6184A1015/U	150 lb-in.	17 Nm	24V	30 - 60 sec	0	90 degrees	Adjustable; 90 to 160 degrees, Symmetrical	None	6.5 lb			
M6184A1023/U	75 lb-in.	8.5 Nm	120V	15 - 30 sec	0	160 degrees	Adjustable; 90 to 160 degrees, Asymmetrical	50004263-003	7.5 lb	Transformer		
M6184D1001/U	75 lb-in.	8.5 Nm	24V	15 - 30 sec	0	90 degrees	Adjustable; 90 to 160 degrees, Symmetrical	None	6.5 lb			
M6184D1035/U	150 lb-in.	17 Nm	24V	30 - 60 sec	0	160 degrees	Adjustable; 90 to 160 degrees, Symmetrical	None	6.5 lb			Tradeline
M6184D1068/U	150 lb-in.	17 Nm	24V	120 - 240 sec	0	90 degrees	Adjustable; 90 to 160 degrees, Symmetrical	None	6.5 lb		Contains on-off pulsing circuitry to achieve timing.	
M6184F1014/U	150 lb-in.	17 Nm	24V	30 - 60 sec	2	90 degrees	Adjustable; 90 to 160 degrees, Symmetrical	None	6.5 lb			
M6194A1005/U	300 lb-in.	34 Nm	120V	120 - 240 sec	0	90 degrees	Adjustable; 90 to 160 degrees, Symmetrical	50004263-003	7.5 lb	Transformer		
M6194B1011/U	300 lb-in.	34 Nm	24V	60 - 120 sec	1	90 degrees	Adjustable; 90 to 160 degrees, Symmetrical	None	6.5 lb			
M6194B1029/U	300 lb-in.	34 Nm	120V	120 - 240 sec	1	90 degrees	Adjustable; 90 to 160 degrees, Symmetrical	50004263-003	7.5 lb	Transformer	Minimum 10° fixed differential	
M6194D1017/U	300 lb-in.	34 Nm	24V	120 - 240 sec	0	160 degrees	Adjustable; 90 to 160 degrees, Symmetrical	None	6.5 lb			Tradeline

Material Number	Torque Rating (lb-in.)	Torque Rating (Nm)	Supply Voltage	Timing, Nominal	Internal Auxiliary Switch	Factory Stroke Setting	Stroke	Internal Transformer	Weight	Includes	Comments	Tradeline Value
M6194D4003/U	300 lb-in.	34 Nm	24V	120 - 240 sec	0	160 degrees	Adjustable; 90 to 160 degrees, Symmetrical	None	6.5 lb			Tradeline
M6194E1006/U	300 lb-in.	34 Nm	24V	120 - 240 sec	1	90 degrees	Adjustable; 90 to 160 degrees, Symmetrical	None	6.5 lb			

Dimensions in inches (millimeters)

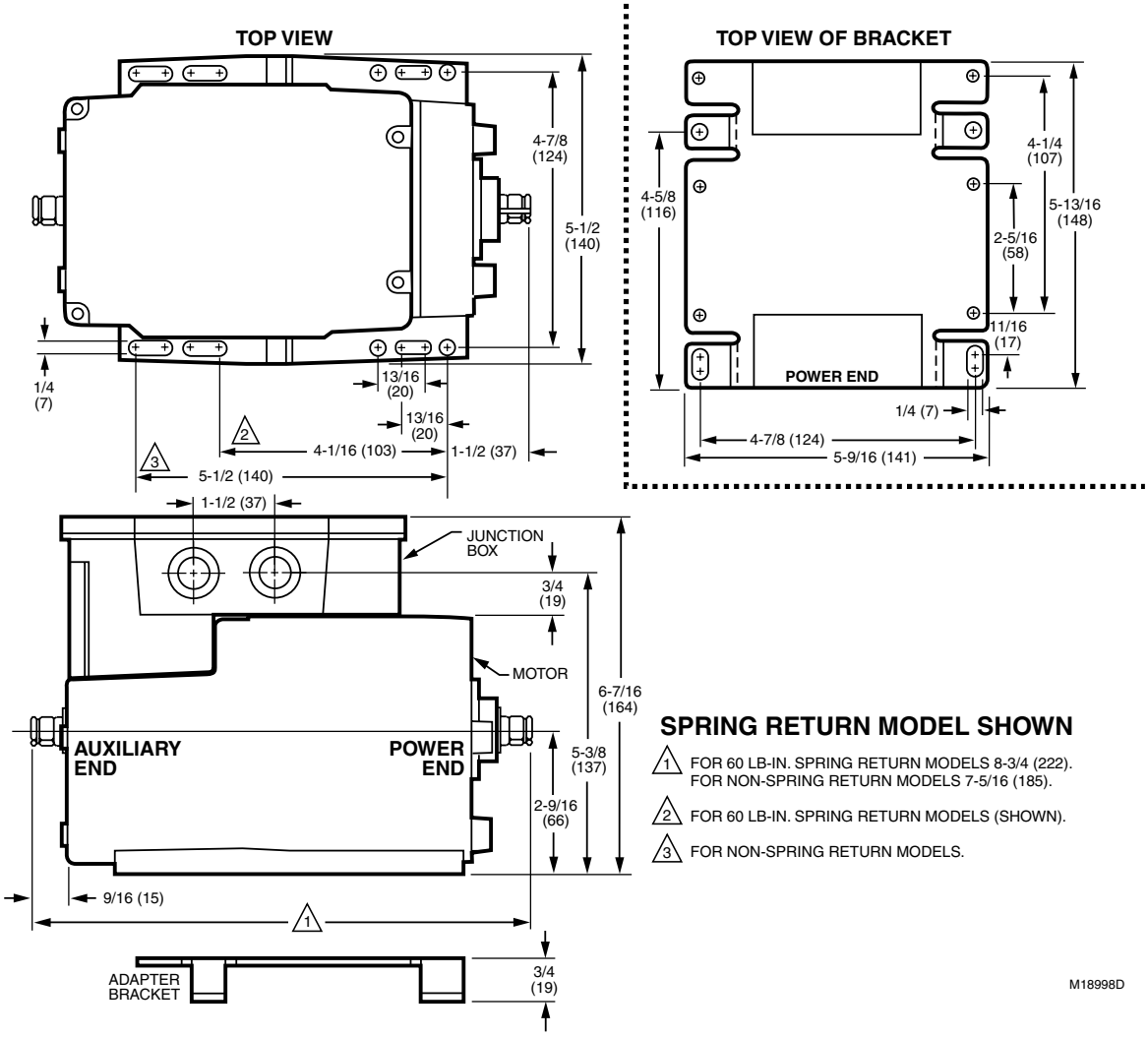

SPRING RETURN MODEL SHOWN

1 FOR 60 LB-IN. SPRING RETURN MODELS 8-3/4 (222). FOR NON-SPRING RETURN MODELS 7-5/16 (185).

2 FOR 60 LB-IN. SPRING RETURN MODELS (SHOWN).

3 FOR NON-SPRING RETURN MODELS.

Typical wiring for Series 61 motors

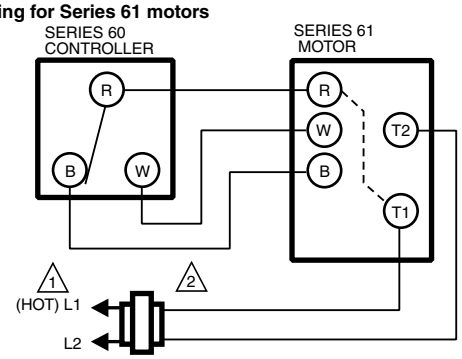

1 POWER SUPPLY. PROVIDE DISCONNECT MEANS AND OVERLOAD PROTECTION AS REQUIRED.

2 TRANSFORMER MAY BE INTERNAL OR EXTERNAL TO MOTOR.

M17095C

M6284; M6294 Floating Modutrol IV™ Motors, for Slaving Applications only

These Series 62 Modutrol IV™ Motors non-spring return floating control motors are used with controllers that provide a switched SPDT or floating output to operate dampers or valves. These motors also have an internal electrically isolated feedback potentiometer that provides indication of the motor shaft position. Some models can be used for slaving Series 90 Motors.

Application: Electric
Control Signal: Floating
Frequency: 50 Hz; 60 Hz
Fail Safe Mode: Non-Spring Return
Auxiliary Switch Ratings: AFL - 120 Vac – 7.2A; ALR - 120 Vac – 43.2A; AFL - 240 Vac – 3.6A; ALR - 240 Vac – 21.6A
Shaft Rotation (upon control signal increase): Dependent on wiring (normally closed)
External Auxiliary Switches Available: Yes
Mounting: Foot-mounted
Power Consumption: Driving – 15 VA
Feedback: Yes
Shaft Dimensions: 0.375 in. Square (10 mm Square)
Motor Shafts: 2; Dual-ended shaft
Deadweight Load on Shaft: Either End – 200 lbs.; Combined on both Shafts – 300 lbs.
Approximate, Dimensions: 6 7/16 in. high x 5 1/2 in. wide x 7 5/16 in. deep (164 mm high x 140 mm wide x 185 mm deep)
Ambient Temperature Range: -40°F to +150°F (-40°C to +60°C)
Approvals, Underwriters Laboratories Inc.: Listed: File No. E4436, Guide No. XAPX for USA and Canada

- Integral junction box provides NEMA 3 weather protection if motor is mounted in the upright position
- Motor and circuitry operate from 24 Vac
- Quick-connect terminals are standard – screw terminal adapter is available
- Adapter bracket for matching shaft height of older motors is available
- Motors have field adjustable stroke (90 to 160 degrees)
- Integral auxiliary switches are available factory mounted, or can be field added
- All models have dual shafts (slotted and tapped on both ends)
- All models have auxiliary switch cams
- Fixed torque throughout the entire voltage range
- Motors are designed for either normally open or normally closed valves and dampers
- Include electrically isolated feedback potentiometer that provides shaft position indication
- -S models with non-linear feedback are for slaving applications only

Approvals, CE: EN55011 (Emission) EN50082-2 (Immunity) 73/23/EEC (LVD)
Approvals, RoHS: 2011/65/ES
Comments: non-linear feedback, for slaving applications only

Accessories:
220736A/U – Internal Auxiliary Switch Assembly - 1 Switch
220736B/U – Internal Auxiliary Switch Assembly - 2 Switches
220738A/U – Adapter Bracket. Adjusts shaft height to match Modutrol III motors
220741A2-62/U – Screw Terminal Adapter Kit for Series 62 Modutrol IV Series 2 motors - Converts quick-connect terminals to screw terminals
221455A/U – Infinitely adjustable Motor Crank Arm
4074ERU/U – Weatherproofing kit. Protects motor from driving rain when mounted in any position. Not needed if motor is mounted upright.
50017460-001/U – 24/120/230 Vac Internal Transformers for Series 2 Motors
50017460-003/U – 120 Vac Internal Transformers for Series 2 Motors

Material Number	Torque Rating (lb-in.)	Torque Rating (Nm)	Supply Voltage	Timing, Nominal	Internal Auxiliary Switch	Electrical Connections	Internal Transformer	Weight	Includes	Tradeline Value	Factory Stroke Setting	Stroke
M6284A1055-S/U	150 lb-in.	17 Nm	120V	30 - 60 sec	0	Quick-connect terminals	50004263-003	7.5 lb	Transformer		90 degrees	Adjustable; 90 to 160 degrees, Symmetrical
M6284A1071-S/U	150 lb-in.	17 Nm	120V	30 - 60 sec	0	Screw terminals	50004263-002	7.5 lb	Transformer		90 degrees	Adjustable; 90 to 160 degrees, Symmetrical
M6284A1089-S/U	75 lb-in.	8.5 Nm	120V	15 - 30 sec	0	Screw terminals	50004263-002	7.5 lb	Transformer		90 degrees	Adjustable; 90 to 160 degrees, Symmetrical
M6284A1097-S/U	150 lb-in.	17 Nm	24V	30 - 60 sec	0	Quick-connect terminals	None	6.5 lb			90 degrees	Adjustable; 90 to 160 degrees, Symmetrical
M6284C1010-S/U	150 lb-in.	17 Nm	24V	30 - 60 sec	2	Screw terminals	None	6.5 lb	Bag Assembly		90 degrees	Adjustable; 90 to 160 degrees, Symmetrical
M6284D1000-S/U	150 lb-in.	17 Nm	24V	30 - 60 sec	0	Quick-connect terminals	None	6.5 lb		Tradeline	160 degrees	Adjustable; 90 to 160 degrees, Symmetrical
M6284D1026-S/U	150 lb-in.	17 Nm	24V	30 - 60 sec	0	Quick-connect terminals	None	6.5 lb	220741A2-62 Screw Terminal Adapter Kit	Tradeline	90 degrees	Adjustable; 90 to 160 degrees, Symmetrical
M6284D4004-S/U	150 lb-in.	17 Nm	24V	30 - 60 sec	0	Quick-connect terminals	None	6.5 lb		Tradeline	160 degrees	Adjustable; 90 to 160 degrees, Symmetrical
M6284F1013-S/U	150 lb-in.	17 Nm	24V	30 - 60 sec	2	Quick-connect terminals	None	6.5 lb			160 degrees	Adjustable; 90 to 160 degrees, Symmetrical
M6284F1062-S/U	150 lb-in.	17 Nm	24V; 120V; 230V	30 - 60 sec	2	Quick-connect terminals	50004263-001	7.5 lb	Transformer		90 degrees	Adjustable; 90 to 160 degrees, Asymmetrical

Material Number	Torque Rating (lb-in.)	Torque Rating (Nm)	Supply Voltage	Timing, Nominal	Internal Auxiliary Switch	Electrical Connections	Internal Transformer	Weight	Includes	Tradeline Value	Factory Stroke Setting	Stroke
M6294D1008-S/U	300 lb-in.	34 Nm	24V	120 - 240 sec	0	Quick-connect terminals	None	6.5 lb		Tradeline	160 degrees	Adjustable; 90 to 160 degrees, Symmetrical

Dimensions in inches (millimeters)

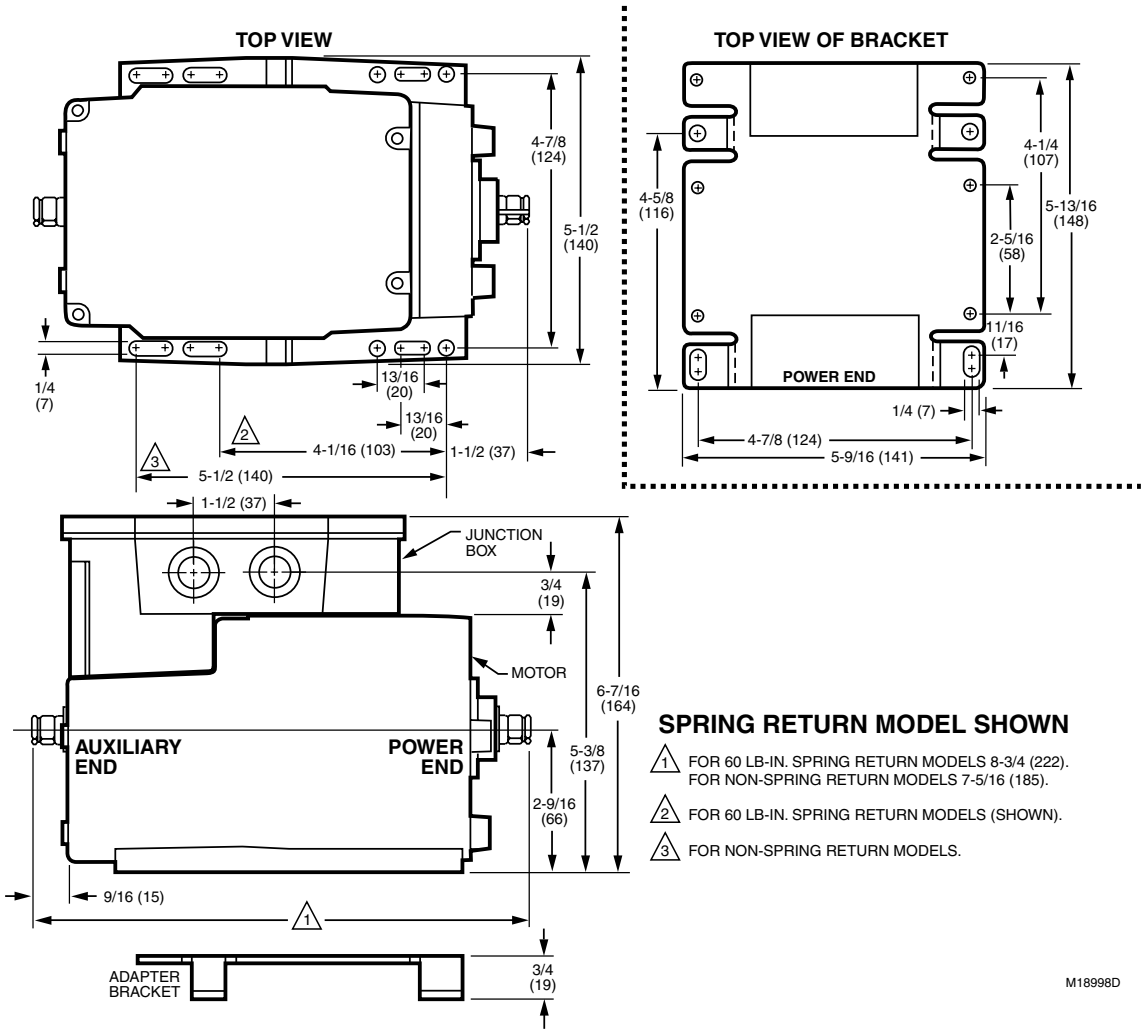

Series 60 and Series 90 motors in slaving application

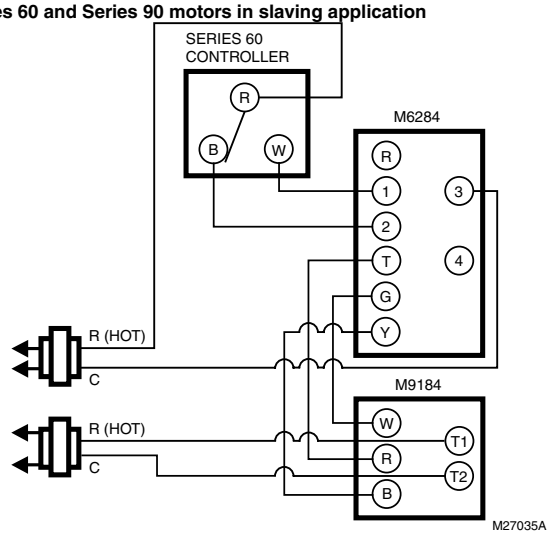

Typical wiring for Series 62 motors

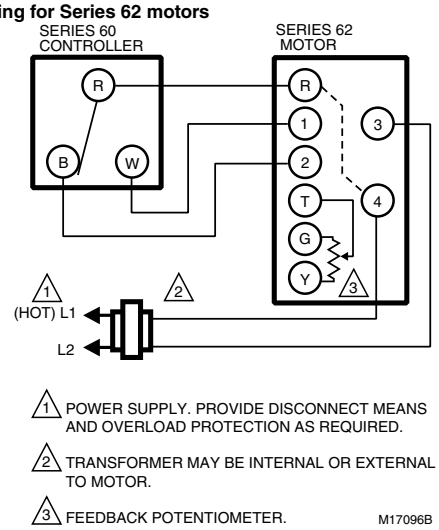

M6285 Floating Modutrol IV™ Motors, for Slaving Applications only

Series 62 Modutrol IV™ Motors are spring return floating control motors are used with controllers that provide a switched SPDT or floating output to operate dampers or valves. These motors also have an internal electrically isolated feedback potentiometer that provides indication of the motor shaft position and can be used for slaving Series 90 motors or rebalancing an external control circuit.

- Integral junction box provides NEMA 3 weather protection if motor is mounted in the upright position
- Integral spring return returns motor to normal position in the event of power failure
- Motor and circuitry operate from 24 Vac
- Quick-connect terminals are standard – screw terminal adapter is available
- Adapter bracket for matching shaft height of older motors is available
- Motors have field adjustable stroke (90 to 160 degrees)
- Integral auxiliary switches are available factory mounted, or can be field added
- Spring return motors can operate valve linkages from power end or auxiliary end shafts for normally closed or normally open valve applications
- All models have dual shafts (slotted and tapped on both ends)
- All models have auxiliary switch cams
- Fixed torque throughout the entire voltage range
- Motors are designed for either normally open or normally closed valves and dampers
- Include electrically isolated feedback potentiometer that provides shaft position indication

Application: Electric
Control Signal: Floating
Frequency: 50 Hz; 60 Hz
Fail Safe Mode: Spring Return
Auxiliary Switch Ratings: AFL - 120 Vac – 7.2A; ALR - 120 Vac – 43.2A; AFL - 240 Vac – 3.6A; ALR - 240 Vac – 21.6A
External Auxiliary Switches Available: Yes
Shaft Rotation (upon control signal increase): Dependent on wiring (normally closed)
Electrical Connections: Quick-connect terminals
Mounting: Foot-mounted
Power Consumption: Driving – 20 VA
Timing, Nominal: 30 - 60 sec
Feedback: Yes
Shaft Dimensions: 0.375 in. Square (10 mm Square)
Stroke: Adjustable; 90 to 160 degrees, Asymmetrical
Motor shafts: 2; Dual-ended shaft
Deadweight Load on Shaft: Either End – 200 lbs.; Combined on both Shafts – 300 lbs.
Weight: 8.5 lb
Approximate, Dimensions: 6 7/16 in. high x 5 1/2 in. wide x 8 3/4 in. deep (164 mm high x 140 mm wide x 222 mm deep)
Ambient Temperature Range: -40°F to +150°F (-40°C to +60°C)

Approvals, Underwriters Laboratories Inc.: Listed: File No. E4436, Guide No. XAPX for USA and Canada
Approvals, CE: EN55011 (Emission) EN50082-2 (Immunity) 73/23/EEC (LVD)
Approvals, RoHS: 2011/65/ES

Accessories:
220736A/U – Internal Auxiliary Switch Assembly - 1 Switch
220736B/U – Internal Auxiliary Switch Assembly - 2 Switches
220738A/U – Adapter Bracket. Adjusts shaft height to match Modutrol III motors
220741A2-62/U – Screw Terminal Adapter Kit for Series 62 Modutrol IV Series 2 motors - Converts quick-connect terminals to screw terminals
221455A/U – Infinitely adjustable Motor Crank Arm
4074ERU/U – Weatherproofing kit. Protects motor from driving rain when mounted in any position. Not needed if motor is mounted upright.
50017460-001/U – 24/120/230 Vac Internal Transformers for Series 2 Motors
50017460-003/U – 120 Vac Internal Transformers for Series 2 Motors

Material Number	Torque Rating (lb-in.)	Torque Rating (Nm)	Supply Voltage	Internal Auxiliary Switch	Factory Stroke Setting	Internal Transformer	Comments	Tradeline Value
M6285A1005-S/U	60 lb-in.	6.8 Nm	24V	0	160 degrees	None	non-linear feedback, for slaving applications only	Tradeline
M6285A4009-S/U	60 lb-in.	6.8 Nm	24V	0	160 degrees	None	non-linear feedback, for slaving applications only	Tradeline
M6285C1001-S/U	60 lb-in.	6.8 Nm	24V	2	160 degrees	None	non-linear feedback, for slaving applications only	

Dimensions in inches (millimeters)

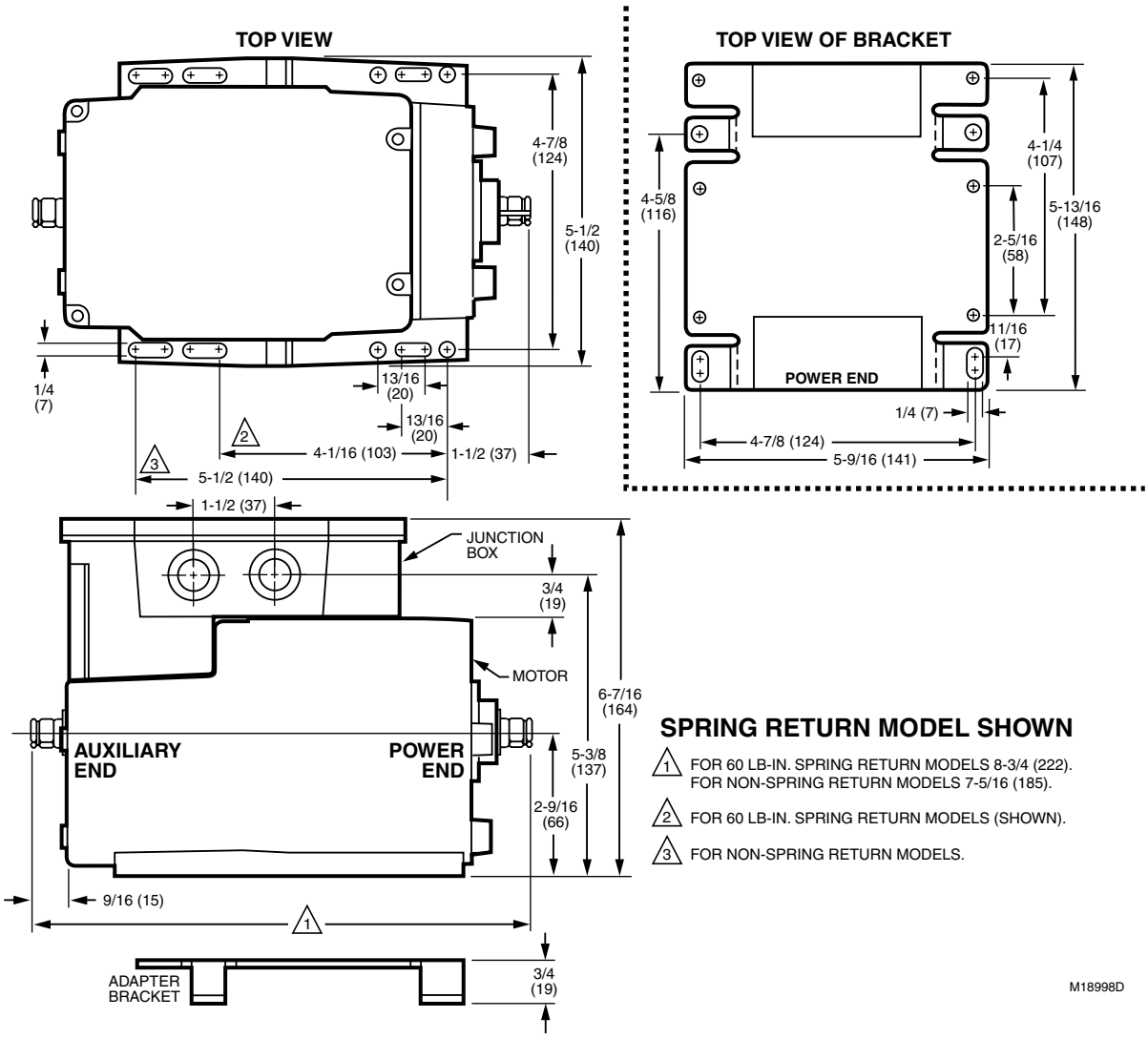

SPRING RETURN MODEL SHOWN

1. FOR 60 LB-IN. SPRING RETURN MODELS 8-3/4 (222). FOR NON-SPRING RETURN MODELS 7-5/16 (185).
2. FOR 60 LB-IN. SPRING RETURN MODELS (SHOWN).
3. FOR NON-SPRING RETURN MODELS.

Series 60 and Series 90 motors in slaving application

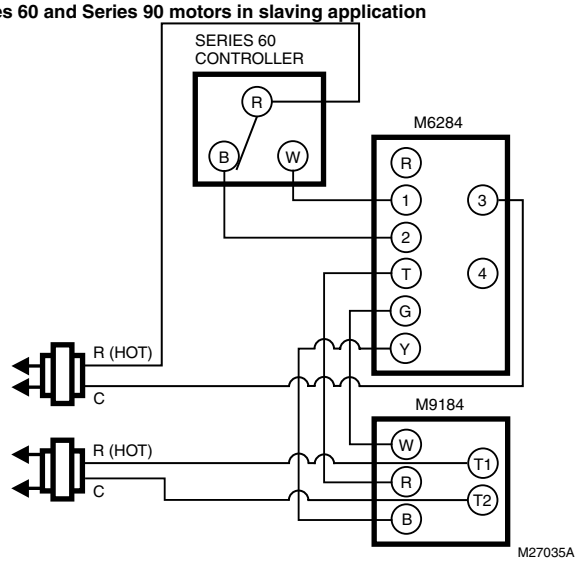

Typical wiring for Series 62 motors

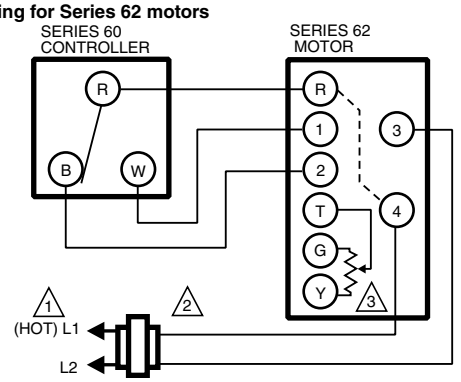

1. POWER SUPPLY. PROVIDE DISCONNECT MEANS AND OVERLOAD PROTECTION AS REQUIRED.
2. TRANSFORMER MAY BE INTERNAL OR EXTERNAL TO MOTOR.
3. FEEDBACK POTENTIOMETER.

M17096B

M6274; M6284; M6285; M6294 Modutrol IV™ Motor with Linear 10K feedback

Series 62 Modutrol IV™ Motors Spring Return and Non-Spring Return floating control motors are used with controllers that provide a switched SPDT or floating output to operate dampers or valves. These motors also have an internal electrically isolated feedback potentiometer that provides indication of the motor shaft position.

- Integral junction box provides NEMA 3 weather protection if motor is mounted in the upright position
- Motor and circuitry operate from 24 Vac
- Quick-connect terminals are standard – screw terminal adapter is available
- Adapter bracket for matching shaft height of older motors is available
- Motors have field adjustable stroke (90 to 160 degrees)
- Integral auxiliary switches are available factory mounted, or can be field added
- All models have dual shafts (slotted and tapped on both ends)
- All models have auxiliary switch cams
- Fixed torque throughout the entire voltage range
- Motors are designed for either normally open or normally closed valves and dampers
- -F models have an internal electrically isolated feedback potentiometer that provides indication of the motor shaft position

Application: Electric
Control Signal: Floating
Frequency: 50 Hz; 60 Hz
Auxiliary Switch Ratings: AFL - 120 Vac – 7.2A; ALR - 120 Vac – 43.2A; AFL - 240 Vac – 3.6A; ALR - 240 Vac – 21.6A
External Auxiliary Switches Available: Yes
Shaft Rotation (upon control signal increase): Dependent on wiring (normally closed)
Mounting: Foot-mounted
Feedback: Yes
Shaft Dimensions: 0.375 in. Square (10 mm Square)
Motor Shafts: 2; Dual-ended shaft
Deadweight Load on Shaft: Either End – 200 lbs.; Combined on both Shafts – 300 lbs.
Approximate, Dimensions: 6 7/16 in. high x 5 1/2 in. wide x 7 5/16 in. deep (164 mm high x 140 mm wide x 185 mm deep)
Ambient Temperature Range: -40°F to +150°F (-40°C to +60°C)
Approvals, Underwriters Laboratories Inc.: Listed: File No. E4436, Guide No. XAPX for USA and Canada
Approvals, CE: EN55011 (Emission) EN50082-2 (Immunity) 73/23/EEC (LVD)
Approvals, RoHS: 2011/65/ES
Comments: Linear 10K feedback

Accessories:
220736A/U – Internal Auxiliary Switch Assembly - 1 Switch
220736B/U – Internal Auxiliary Switch Assembly - 2 Switches
220738A/U – Adapter Bracket. Adjusts shaft height to match Modutrol III motors
220741A2-62/U – Screw Terminal Adapter Kit for Series 62 Modutrol IV Series 2 motors - Converts quick-connect terminals to screw terminals
221455A/U – Infinitely adjustable Motor Crank Arm
4074ERU/U – Weatherproofing kit. Protects motor from driving rain when mounted in any position. Not needed if motor is mounted upright.
50017460-001/U – 24/120/230 Vac Internal Transformers for Series 2 Motors
50017460-003/U – 120 Vac Internal Transformers for Series 2 Motors

Material Number	Fail Safe Mode	Torque Rating (lb-in.)	Torque Rating (Nm)	Supply Voltage	Timing, Nominal	Internal Auxiliary Switch	Factory Stroke Setting	Power Consumption	Electrical Connections	Internal Transformer	Weight	Includes	Tradeline Value	Stroke
M6274F1009-F/U	Non-Spring Return	75 lb-in.	8.5 Nm	24V	15 - 27 sec	2	90 degrees	Driving – 26 VA	Screw terminals	None	6.5 lb			Adjustable; 90 to 160 degrees, Symmetrical
M6284D1032-F/U	Non-Spring Return	150 lb-in.	17 Nm	24V	30 - 60 sec	0	160 degrees	Driving – 16 VA	Quick-connect terminals	None	6.5 lb		Tradeline	Adjustable; 90 to 160 degrees, Symmetrical
M6284F1070-F/U	Non-Spring Return	150 lb-in.	17 Nm	120V	30 - 60 sec	0	90 degrees	Driving – 15 VA	Quick-connect terminals	50004263-003	7.5 lb	Transformer		Adjustable; 90 to 160 degrees
M6284F1078-F/U	Non-Spring Return	150 lb-in.	17 Nm	24V	30 - 53 sec	2	90 degrees	Driving – 17 VA	Screw terminals	None	6.5 lb			Adjustable; 90 to 160 degrees, Symmetrical
M6285F1001-F/U	Spring Return	60 lb-in.	6.8 Nm	24V	30 - 53 sec; Spring Return — 30 sec	2	160 degrees	Driving – 21 VA	Screw terminals	None	8.5 lb			Adjustable; 90 to 160 degrees, Asymmetrical
M6294F1009-F/U	Non-Spring Return	300 lb-in.	34 Nm	24V	120 - 214 sec	2	160 degrees	Driving – 17 VA	Screw terminals	None	6.5 lb			Adjustable; 90 to 160 degrees, Symmetrical
M6294F1017-F/U	Non-Spring Return	300 lb-in.	34 Nm	24V	60 - 107 sec	2	90 degrees	Driving – 17 VA	Screw terminals	None	6.5 lb			Adjustable; 90 to 160 degrees, Symmetrical

Dimensions in inches (millimeters)

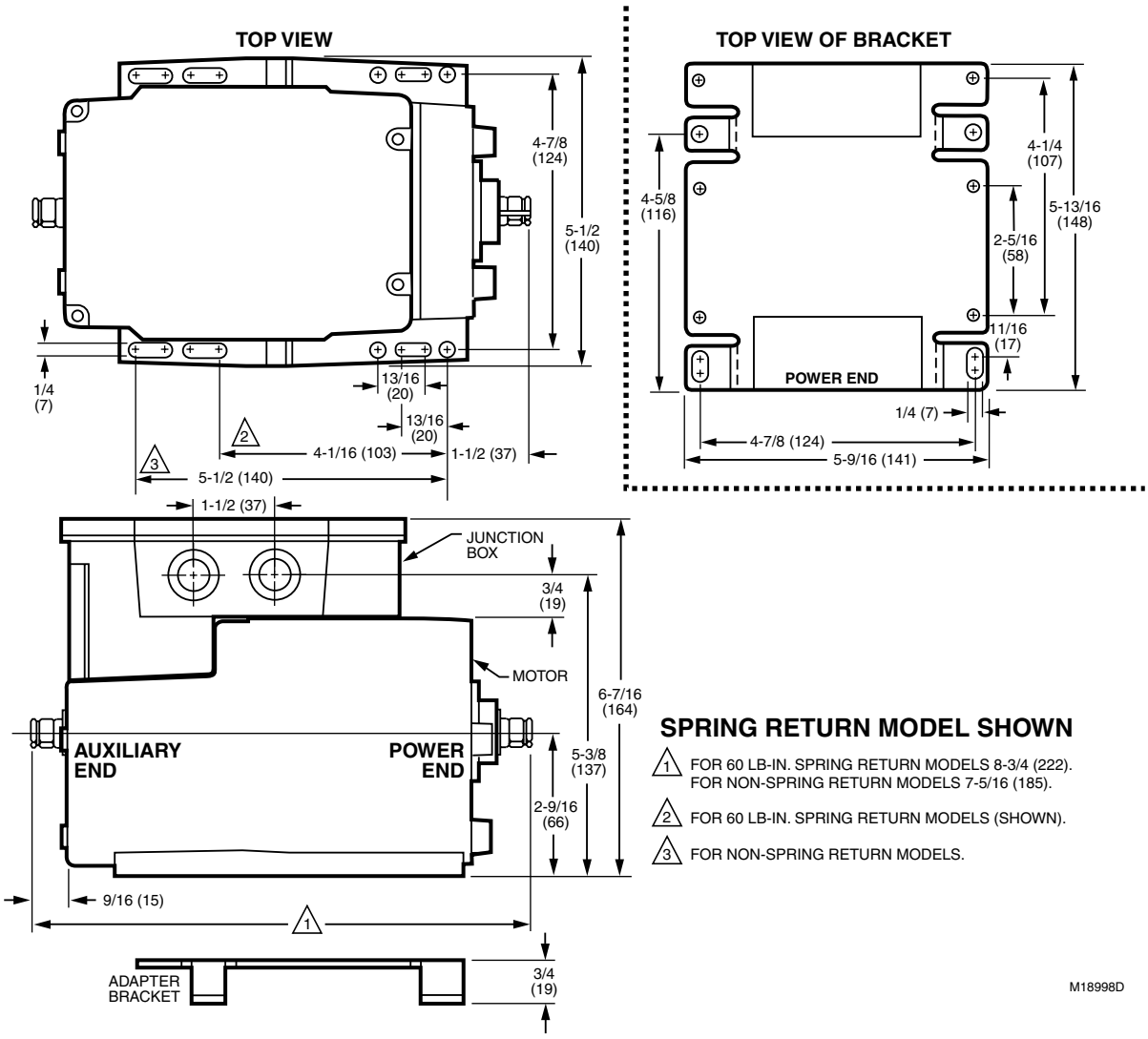

SPRING RETURN MODEL SHOWN

1. FOR 60 LB-IN. SPRING RETURN MODELS 8-3/4 (222). FOR NON-SPRING RETURN MODELS 7-5/16 (185).
2. FOR 60 LB-IN. SPRING RETURN MODELS (SHOWN).
3. FOR NON-SPRING RETURN MODELS.

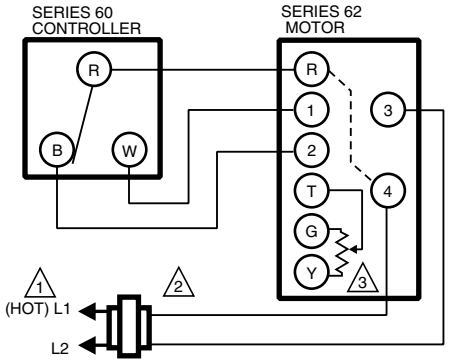

1. POWER SUPPLY. PROVIDE DISCONNECT MEANS AND OVERLOAD PROTECTION AS REQUIRED.
2. TRANSFORMER MAY BE INTERNAL OR EXTERNAL TO MOTOR.
3. FEEDBACK POTENTIOMETER.

M17096B

M7164 Modutrol IV™ Motors

Series 71 Modutrol IV™ Motors non-spring return motors are used to control dampers and valves. These motors accept a voltage signal from an electronic controller to position a damper or valve at any point between open and closed.

- Integral junction box provides NEMA 3 weather protection if motor is mounted in the upright position
- Motor and circuitry operate from 24 Vac
- Quick-connect terminals are standard – screw terminal adapter is available
- Adapter bracket for matching shaft height of older motors is available
- Motors have field adjustable stroke (90 to 160 degrees)
- Integral auxiliary switches are available factory mounted, or can be field added
- All models have dual shafts (slotted and tapped on both ends)
- All models have auxiliary switch cams
- Fixed torque throughout the entire voltage range

Application: Electric
Control Signal: Modulating, 10.5-13.5 Vdc
Frequency: 50 Hz; 60 Hz
Fail Safe Mode: Non-Spring Return
Auxiliary Switch Ratings: AFL - 120 Vac – 7.2A; ALR- 120 Vac – 43.2A; AFL - 240 Vac – 3.6A; ALR- 240 Vac – 21.6A
External Auxiliary Switches Available: Yes
Shaft Rotation (upon control signal increase): Clockwise (as viewed from power end) (normally closed)
Electrical Connections: Quick-connect terminals
Mounting: Foot-mounted
Power Consumption: Driving – 10 VA
Timing, Nominal: 30 - 60 sec
Feedback: No
Shaft Dimensions: 0.375 in. Square (10 mm Square)
Motor shafts: 2; Dual-ended shaft
Deadweight Load on Shaft: Either End – 200 lbs.; Combined on both Shafts – 300 lbs.
Weight: 6.5 lb
Approximate, Dimensions: 6 7/16 in. high x 5 1/2 in. wide x 7 5/16 in. deep (164 mm high x 140 mm wide x 185 mm deep)
Ambient Temperature Range: -40°F to +150°F (-40°C to +60°C)
Includes: Transformer

Approvals, Underwriters Laboratories Inc.: Listed: File No. E4436, Guide No. XAPX for USA and Canada
Approvals, CE: EN55011 (Emission) EN50082-2 (Immunity) 73/23/EEC (LVD)
Approvals, RoHS: 2011/65/ES

Accessories:
220736A/U – Internal Auxiliary Switch Assembly - 1 Switch
220736B/U – Internal Auxiliary Switch Assembly - 2 Switches
220738A/U – Adapter Bracket. Adjusts shaft height to match Modutrol III motors
220741A2-71/U – Screw Terminal Adapter Kit for Series 71 Modutrol IV Series 2 motors - Converts quick-connect terminals to screw terminals
221455A/U – Infinitely adjustable Motor Crank Arm
4074ERU/U – Weatherproofing kit. Protects motor from driving rain when mounted in any position. Not needed if motor is mounted upright.
50017460-001/U – 24/120/230 Vac Internal Transformers for Series 2 Motors
50017460-003/U – 120 Vac Internal Transformers for Series 2 Motors

Material Number	Torque Rating (lb-in.)	Torque Rating (Nm)	Supply Voltage	Internal Auxiliary Switch	Factory Stroke Setting	Stroke	Internal Transformer
M7164A1017/U	35 lb-in.	4 Nm	24V; 120V; 230V	0	90 degrees	Adjustable; 90 to 160 degrees, Asymmetrical	50004263-001
M7164G1030/U	35 lb-in.	4 Nm	120V	0	90 degrees	Adjustable; 90 to 160 degrees, Symmetrical	50004263-003

Dimensions in inches (millimeters)

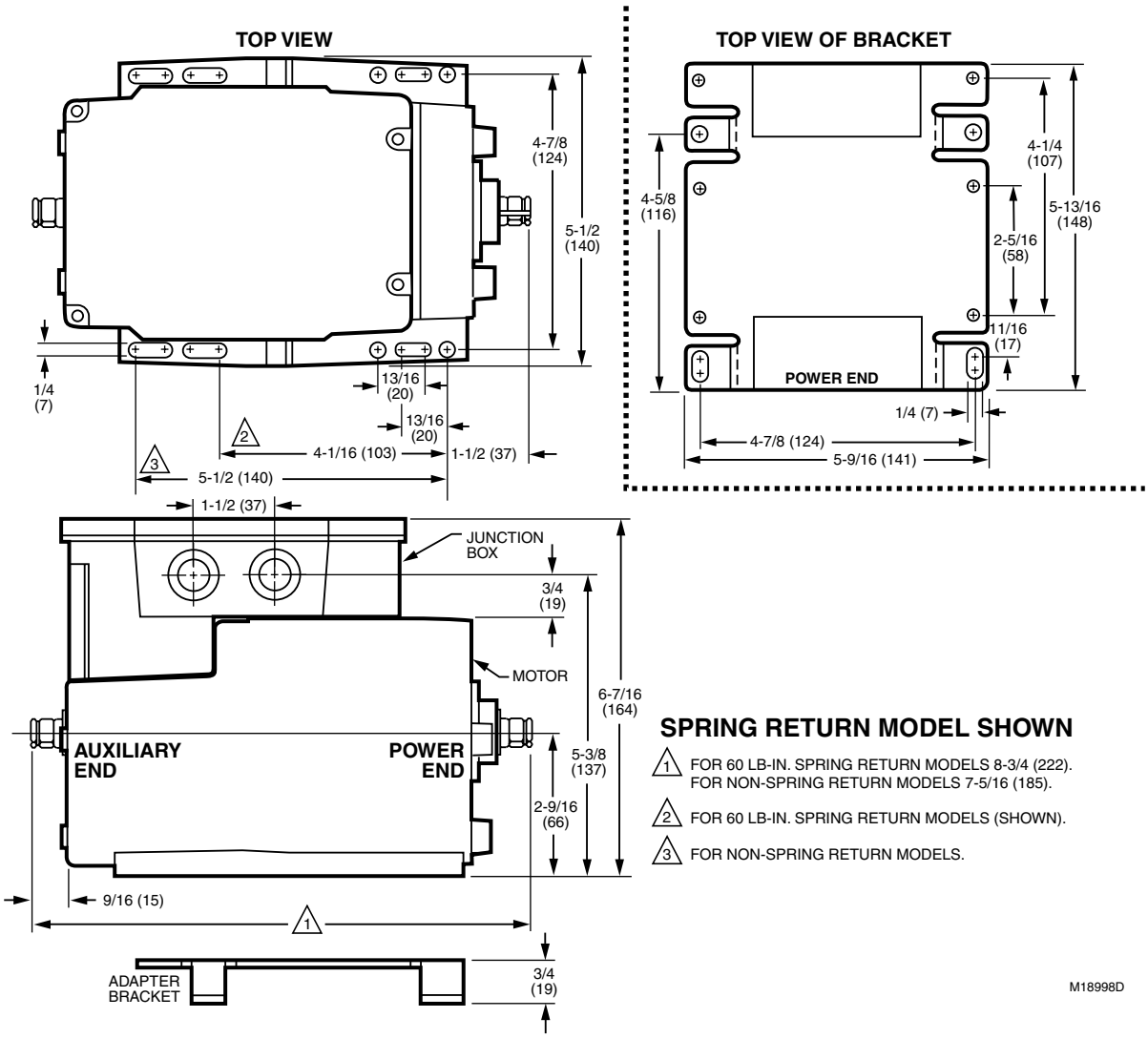

SPRING RETURN MODEL SHOWN

1. FOR 60 LB-IN. SPRING RETURN MODELS 8-3/4 (222). FOR NON-SPRING RETURN MODELS 7-5/16 (185).
2. FOR 60 LB-IN. SPRING RETURN MODELS (SHOWN).
3. FOR NON-SPRING RETURN MODELS.

Typical wiring for Series 70 motors

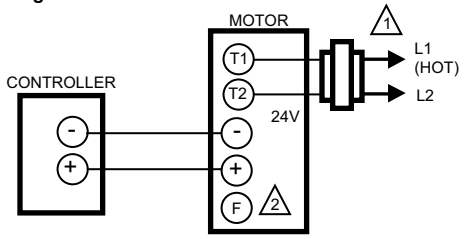

1. POWER SUPPLY. PROVIDE DISCONNECT MEANS AND OVERLOAD PROTECTION AS REQURED.
2. CONNECTING F TO – WILL DRIVE MOTOR TO FULLY OPEN.

M5778

M7274; M7284; M7294 Modutrol IV™ Motors

The Series 72 Modutrol IV Motors spring return and non-spring return motors are used to control dampers and valves. The motors accept a current or voltage signal from an electronic controller to position a damper or valve at any point between open and closed.

- Integral spring return returns motor to normal position in the event of power failure on spring return models

Application: Electric
Frequency: 50 Hz; 60 Hz
Fail Safe Mode: Non-Spring Return
Auxiliary Switch Ratings: AFL - 120 Vac – 7.2A; ALR - 120 Vac – 43.2A; AFL - 240 Vac – 3.6A; ALR - 240 Vac – 21.6A
External Auxiliary Switches Available: Yes
Shaft Rotation (upon control signal increase): Clockwise (as viewed from power end) (normally closed)
Mounting: Foot-mounted
Feedback: No
Shaft Dimensions: 0.375 in. Square (10 mm Square)
Motor shafts: 2; Dual-ended shaft
Deadweight Load on Shaft: Either End – 200 lbs.; Combined on both Shafts – 300 lbs.
Approximate, Dimensions: 6 7/16 in. high x 5 1/2 in. wide x 7 5/16 in. deep (164 mm high x 140 mm wide x 185 mm deep)
Ambient Temperature Range: -40°F to +150°F (-40°C to +60°C)
Approvals, Underwriters Laboratories Inc.: Listed: File No. E4436, Guide No. XAPX for USA and Canada
Approvals, CE: EN55011 (Emission) EN50082-2 (Immunity) 73/23/EEC (LVD)
Approvals, RoHS: 2011/65/ES

- Integral junction box provides NEMA 3 weather protection if motor is mounted in the upright position
- Motor and circuitry operate from 24 Vac
- Quick-connect terminals are standard – screw terminal adapter is available
- Adapter bracket for matching shaft height of older motors is available
- Motors have field adjustable stroke (90 to 160 degrees)
- Integral auxiliary switches are available factory mounted, or can be field added
- Spring return motors can operate valve linkages from power end or auxiliary end shafts for normally closed or normally open valve applications
- All models have dual shafts (slotted and tapped on both ends)
- All models have auxiliary switch cams
- Fixed torque throughout the entire voltage range
- Motors are designed for either normally open or normally closed valves and dampers
- Models available with adjustable start (zero) and span
- Models available with 4 to 20 mA input signal
- Die-cast aluminum housing

Accessories:
220736A/U – Internal Auxiliary Switch Assembly - 1 Switch
220736B/U – Internal Auxiliary Switch Assembly - 2 Switches
220738A/U – Adapter Bracket. Adjusts shaft height to match Modutrol III motors
220741A2-72/U – Screw Terminal Adapter Kit for Series 72 Modutrol IV Series 2 motors - Converts quick-connect terminals to screw terminals
221455A/U – Infinitely adjustable Motor Crank Arm
4074ERU/U – Weatherproofing kit. Protects motor from driving rain when mounted in any position. Not needed if motor is mounted upright.
50017460-001/U – 24/120/230 Vac Internal Transformers for Series 2 Motors
50017460-003/U – 120 Vac Internal Transformers for Series 2 Motors

Material Number	Torque Rating (lb-in.)	Torque Rating (Nm)	Supply Voltage	Timing, Nominal	Internal Auxiliary Switch	Factory Stroke Setting	Stroke	Control Signal	Electrical Connections	Power Consumption	Weight	Internal Transformer	Comments	Includes
M7274Q1009/U	75 lb-in.	8.5 Nm	24V	15 - 27 sec	2	90 degrees	Adjustable; 90 to 160 degrees, Symmetrical	Modulating, 4-20 mA	Screw terminals	Driving – 29 VA	7 lb	None	Adjustable zero and span for split range applications	
M7284A1004/U	150 lb-in.	17 Nm	120V	30 - 60 sec	0	90 degrees	Adjustable; 90 to 160 degrees, Symmetrical	Modulating, 4-20 mA	Screw terminals	Driving – 15 VA	7.5 lb	50004263-002		Transformer and Screw Terminal Adapter
M7284A1012/U	150 lb-in.	17 Nm	120V	30 - 60 sec	0	160 degrees	Adjustable; 90 to 160 degrees, Asymmetrical	Modulating, 4-20 mA	Screw terminals	Driving – 15 VA	7.5 lb	50004263-002		Transformer and Screw Terminal Adapter
M7284A1038/U	75 lb-in.	8.5 Nm	120V	15 - 30 sec	0	90 degrees	Adjustable; 90 to 160 degrees, Asymmetrical	Modulating, 4-20 mA	Screw terminals	Driving – 15 VA	7.5 lb	50004263-002		Transformer and Screw Terminal Adapter
M7284A1079/U	150 lb-in.	17 Nm	24V	30 - 60 sec	0	160 degrees	Adjustable; 90 to 160 degrees, Asymmetrical	Modulating, 2-10 Vdc	Quick-connect terminals	Driving – 15 VA	6.5 lb	None		
M7284C1000/U	150 lb-in.	17 Nm	120V	30 - 60 sec	2	90 degrees	Adjustable; 90 to 160 degrees, Symmetrical	Modulating, 4-20 mA	Screw terminals	Driving – 15 VA	7.5 lb	50004263-002		Transformer and Screw Terminal Adapter
M7284C1083/U	150 lb-in.	17 Nm	24V; 120V; 230V	30 sec	2	90 degrees	Fixed; 90 degrees, Symmetrical	Modulating, 4-20 mA	Screw terminals	Driving – 15 VA	7.5 lb	50004263-001	Enhanced models, additional repositions	Transformer
M7284C1091/U	150 lb-in.	17 Nm	24V; 120V; 230V	60 sec	2	160 degrees	Fixed; 160 degrees, Asymmetrical	Modulating, 4-20 mA	Screw terminals	Driving – 15 VA	7.5 lb	50004263-001	Enhanced models, additional repositions	Transformer

Material Number	Torque Rating (lb-in.)	Torque Rating (Nm)	Supply Voltage	Timing, Nominal	Internal Auxiliary Switch	Factory Stroke Setting	Stroke	Control Signal	Electrical Connections	Power Consumption	Weight	Internal Transformer	Comments	Includes
M7284Q1009/C	150 lb-in.	17 Nm	120V	30 - 60 sec	2	90 degrees	Adjustable; 90 to 160 degrees, Symmetrical	Modulating, 4-20 mA	Screw terminals	Driving – 15 VA	7.5 lb	50004263-002	Adjustable zero and span for split range applications	Transformer and Screw Terminal Adapter
M7284Q1009/U	150 lb-in.	17 Nm	120V	30 - 60 sec	2	90 degrees	Adjustable; 90 to 160 degrees, Symmetrical	Modulating, 4-20 mA	Screw terminals	Driving – 15 VA	7.5 lb	50004263-002	Adjustable zero and span for split range applications	Transformer and Screw Terminal Adapter
M7284Q1082/U	150 lb-in.	17 Nm	24V; 120V; 230V	30 sec	2	90 degrees	Fixed; 90 degrees, Symmetrical	Modulating, 4-20 mA	Screw terminals	Driving – 15 VA	7.5 lb	50004263-006	Enhanced models, additional repositions (160°); Adjustable zero and span for split range applications	Transformer
M7284Q1090/U	150 lb-in.	17 Nm	24V; 120V; 230V	60 sec	2	160 degrees	Fixed; 160 degrees, Asymmetrical	Modulating, 4-20 mA	Screw terminals	Driving – 15 VA	7.5 lb	50004263-006	Enhanced models, additional repositions (160°); Adjustable zero and span for split range applications	Transformer
M7284Q1098/U	150 lb-in.	17 Nm	24V	30 - 53 sec	2	160 degrees	Adjustable; 90 to 160 degrees, Asymmetrical	Modulating, 2-10 Vdc	Screw terminals	Driving – 20 VA	6.5 lb	None	Adjustable zero and span for split range applications; Enhanced models, additional repositions	
M7284Q1106/U	150 lb-in.	17 Nm	24V	30 - 60 sec	2	90 degrees	Adjustable; 90 to 160 degrees, Symmetrical	Modulating, 4-20 mA	Screw terminals	Driving – 15 VA	7.5 lb	None	Adjustable zero and span for split range applications	
M7294A1010/U	300 lb-in.	34 Nm	24V	60 - 120 sec	0	160 degrees	Adjustable; 90 to 160 degrees, Asymmetrical	Modulating, 2-10 Vdc	Quick-connect terminals	Driving – 15 VA	6.5 lb	None		
M7294Q1007/U	300 lb-in.	34 Nm	120V	60 - 120 sec	2	90 degrees	Adjustable; 90 to 160 degrees, Symmetrical	Modulating, 4-20 mA	Screw terminals	Driving – 15 VA	7.5 lb	50004263-002	Adjustable zero and span for split range applications	Transformer and Screw Terminal Adapter
M7294Q1015/U	300 lb-in.	34 Nm	24V	60 - 107 sec	2	90 degrees	Adjustable; 90 to 160 degrees, Symmetrical	Modulating, 4-20 mA	Screw terminals	Driving – 29 VA	7.5 lb	None	Adjustable zero and span for split range applications	Screw Terminal Adapter

Modutrol IV Motors

Dimensions in inches (millimeters)

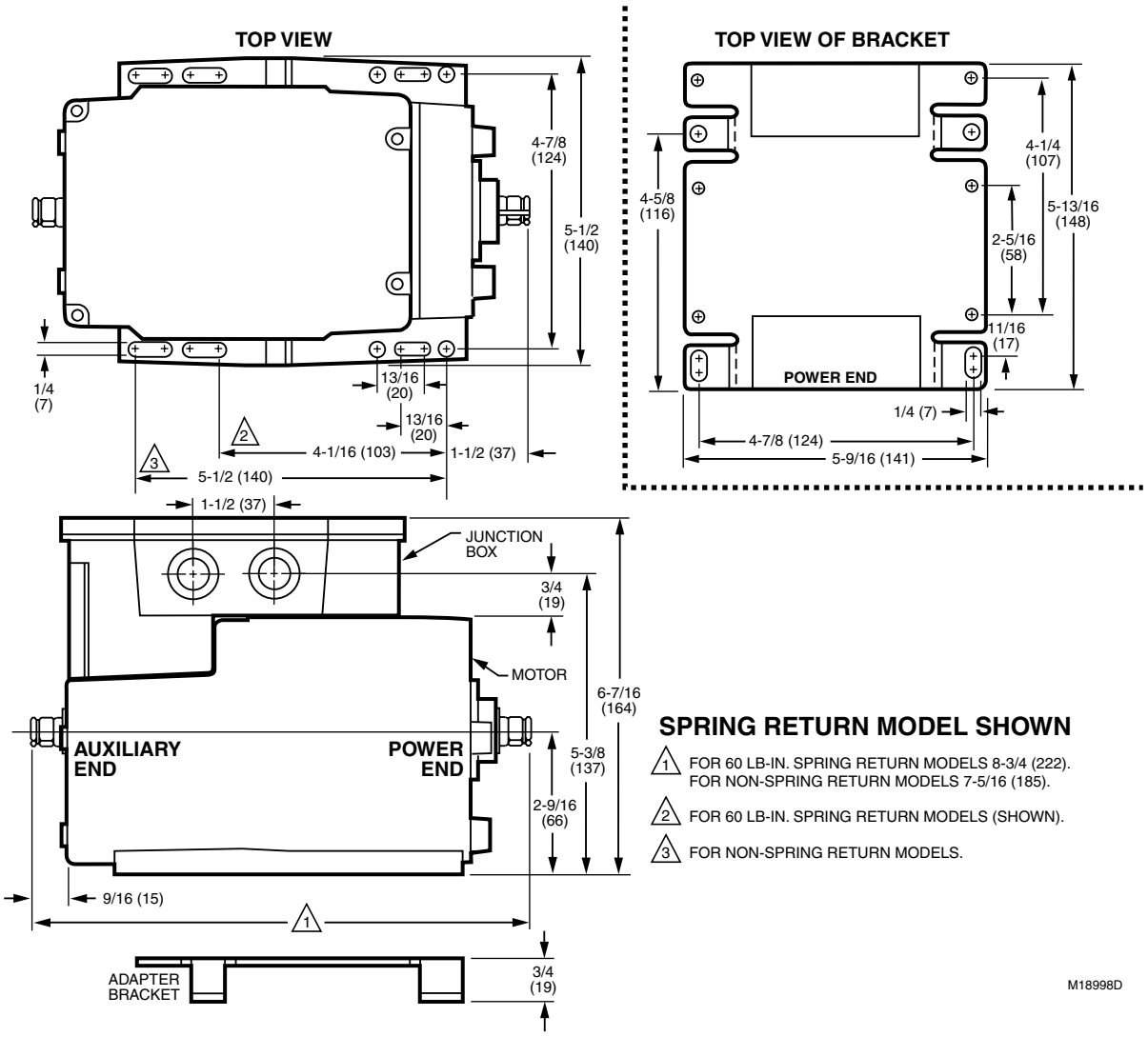

SPRING RETURN MODEL SHOWN

1. FOR 60 LB-IN. SPRING RETURN MODELS 8-3/4 (222). FOR NON-SPRING RETURN MODELS 7-5/16 (185).
2. FOR 60 LB-IN. SPRING RETURN MODELS (SHOWN).
3. FOR NON-SPRING RETURN MODELS.

Typical wiring for Series 70 motors

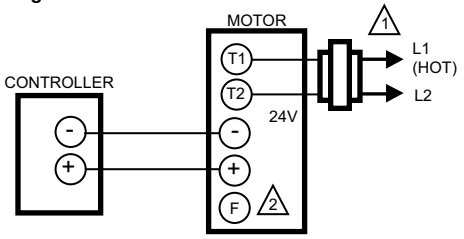

1. POWER SUPPLY. PROVIDE DISCONNECT MEANS AND OVERLOAD PROTECTION AS REQURED.
2. CONNECTING F TO – WILL DRIVE MOTOR TO FULLY OPEN.

M5778

M7285; M7286 Modutrol IV™ Motors

Series 72 Modutrol IV™ Motors are spring return and non-spring return motors (per motor type) used to control dampers and valves. The motors accept a current or voltage signal from an electronic controller to position a damper or valve at any point between open and closed.

- Integral spring return returns motor to normal position in the event of power failure on spring return models
- Integral junction box provides NEMA 3 weather protection if motor is mounted in the upright position
- Motor and circuitry operate from 24 Vac
- Quick-connect terminals are standard – screw terminal adapter is available
- Adapter bracket for matching shaft height of older motors is available
- Motors have field adjustable stroke (90 to 160 degrees)
- Integral auxiliary switches are available factory mounted, or can be field added
- Spring return motors can operate valve linkages from power end or auxiliary end shafts for normally closed or normally open valve applications
- All models have dual shafts (slotted and tapped on both ends)
- All models have auxiliary switch cams
- Fixed torque throughout the entire voltage range
- Motors are designed for either normally open or normally closed valves and dampers
- Models available with adjustable start (zero) and span
- Models available with 4 to 20 mA input signal
- Models available with 2 to 10 Vdc input signal
- Die-cast aluminum housing

Application: Electric
Frequency: 50 Hz; 60 Hz
Fail Safe Mode: Spring Return
Torque Rating (lb-in.): 60 lb-in.
Torque Rating (Nm): 6.8 Nm
Auxiliary Switch Ratings: AFL - 120 Vac – 7.2A; ALR- 120 Vac – 43.2A; AFL - 240 Vac – 3.6A; ALR- 240 Vac – 21.6A
External Auxiliary Switches Available: Yes
Stroke: Adjustable; 90 to 160 degrees, Asymmetrical
Mounting: Foot-mounted
Feedback: No
Shaft Dimensions: 0.375 in. Square (10 mm Square)
Motor Shafts: 2; Dual-ended shaft
Deadweight Load on Shaft: Either End – 200 lbs.; Combined on both Shafts – 300 lbs.
Approximate, Dimensions: 6 7/16 in. high x 5 1/2 in. wide x 8 3/4 in. deep (164 mm high x 140 mm wide x 222 mm deep)
Ambient Temperature Range: -40°F to +150°F (-40°C to +60°C)
Approvals, Underwriters Laboratories Inc.: Listed: File No. E4436, Guide No. XAPX for USA and Canada
Approvals, CE: EN55011 (Emission) EN50082-2 (Immunity) 73/23/EEC (LVD)
Approvals, RoHS: 2011/65/ES

Accessories:
220736A/U – Internal Auxiliary Switch Assembly - 1 Switch
220736B/U – Internal Auxiliary Switch Assembly - 2 Switches
220738A/U – Adapter Bracket. Adjusts shaft height to match Modutrol III motors
221455A/U – Infinitely adjustable Motor Crank Arm
4074ERU/U – Weatherproofing kit. Protects motor from driving rain when mounted in any position. Not needed if motor is mounted upright.

50017460-001/U – 24/120/230 Vac Internal Transformers for Series 2 Motors
50017460-003/U – 120 Vac Internal Transformers for Series 2 Motors

Material Number	Control Signal	Power Consumption	Electrical Connections	Internal Transformer	Supply Voltage	Timing, Nominal	Internal Auxiliary Switch	Factory Stroke Setting	Weight	Shaft Rotation (upon control signal increase)	Comments	Includes
M7285A1003/U	Modulating, 4-20 mA	Driving – 20 VA	Screw terminals	50004263-002	120V	30 - 60 sec	0	90 degrees	9.5 lb	Clockwise (as viewed from power end) (normally closed)		Transformer and Screw Terminal Adapter
M7285A1045/U	Modulating, 2-10 Vdc	Driving – 20 VA	Quick-connect terminals	None	24V	30 - 60 sec	0	160 degrees	8.5 lb	Clockwise (as viewed from power end) (normally closed)		
M7285C1009/U	Modulating, 4-20 mA	Driving – 20 VA	Screw terminals	50004263-002	120V	30 - 60 sec	2	90 degrees	9.5 lb	Clockwise (as viewed from power end) (normally closed)		Transformer and Screw Terminal Adapter
M7285Q1008/U	Modulating, 4-20 mA	Driving – 20 VA	Screw terminals	50004263-002	120V	30 - 60 sec	2	90 degrees	9.5 lb	Clockwise (as viewed from power end) (normally closed)	Adjustable zero and span for split range applications	Transformer and Screw Terminal Adapter
M7285Q1024/U	Modulating, 4-20 mA	Driving – 34 VA	Screw terminals	None	24V	30 - 53 sec	2	90 degrees	9.5 lb	Clockwise (as viewed from power end) (normally closed)	Adjustable zero and span for split range applications	Screw Terminal Adapter
M7285Q1032/U	Modulating, 2-10 Vdc	Driving – 24 VA	Screw terminals	None	24V	30 - 53 sec	2	160 degrees	9.5 lb	Clockwise (as viewed from power end) (normally closed)	Adjustable zero and span for split range applications	Screw Terminal Adapter
M7286G1009/U	Modulating, 2-10 Vdc	Driving – 15 VA	Quick-connect terminals	None	24V	30 - 60 sec	0	160 degrees	8.5 lb	Counter-clockwise (as viewed from power end) (normally open)		

Modutrol IV Motors

Dimensions in inches (millimeters)

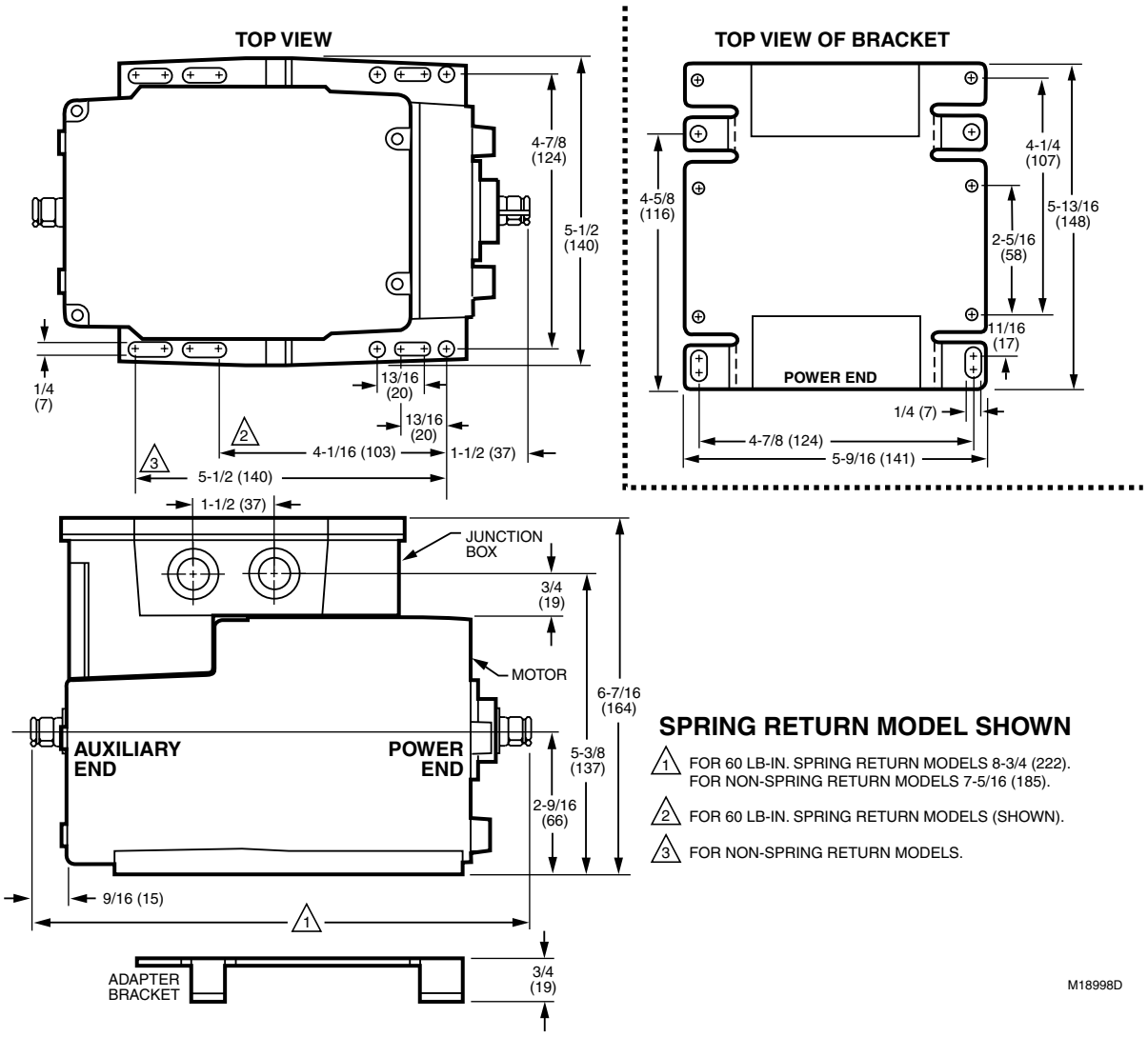

SPRING RETURN MODEL SHOWN

1. FOR 60 LB-IN. SPRING RETURN MODELS 8-3/4 (222). FOR NON-SPRING RETURN MODELS 7-5/16 (185).
2. FOR 60 LB-IN. SPRING RETURN MODELS (SHOWN).
3. FOR NON-SPRING RETURN MODELS.

Typical wiring for Series 70 motors

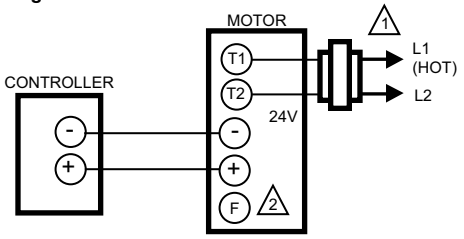

1. POWER SUPPLY. PROVIDE DISCONNECT MEANS AND OVERLOAD PROTECTION AS REQURED.
2. CONNECTING F TO – WILL DRIVE MOTOR TO FULLY OPEN.

M5778

M7685 Modutrol IV™ Motor

Proportional, spring-return motors for use with Honeywell W7080 panel 14-17 Vdc output; with minimum position adjustment.

- Integral spring return returns motor to normal position in the event of power failure
- Integral junction box provides NEMA 3 weather protection
- Motor and circuitry operate from 24 Vac
- Quick-connect terminals are standard
- Adapter bracket for matching shaft height of older motors is available
- Motors have field adjustable stroke (90 to 160 degrees)
- Integral auxiliary switches are available factory mounted, or can be field added
- Spring return motors can operate valve linkages from power end or auxiliary end shafts for normally closed or normally open valve applications
- All models have dual shafts (slotted and tapped on both ends)
- All models have auxiliary switch cams
- Fixed torque throughout the entire voltage range

Application: Electric
Control Signal: Modulating, 14-17 Vdc
Frequency: 50 Hz; 60 Hz
Fail Safe Mode: Spring Return
Auxiliary Switch Ratings: AFL - 120 Vac – 7.2A; ALR - 120 Vac – 43.2A; AFL - 240 Vac – 3.6A; ALR - 240 Vac – 21.6A
External Auxiliary Switches Available: Yes
Shaft Rotation (upon control signal increase): Clockwise (as viewed from power end) (normally closed)
Electrical Connections: Quick-connect terminals
Mounting: Foot-mounted
Power Consumption: Driving – 20 VA
Feedback: No
Shaft Dimensions: 0.375 in. Square (10 mm Square)
Motor shafts: 2; Dual-ended shaft
Deadweight Load on Shaft: Either End – 200 lbs.; Combined on both Shafts – 300 lbs.
Weight: 8.5 lb
Approximate, Dimensions: 6 7/16 in. high x 5 1/2 in. wide x 8 3/4 in. deep (164 mm high x 140 mm wide x 222 mm deep)
Ambient Temperature Range: -40°F to +150°F (-40°C to +60°C)
Approvals, Underwriters Laboratories Inc.: Listed: File No. E4436, Guide No. XAPX for USA and Canada
Approvals, CE: EN55011 (Emission) EN50082-2 (Immunity) 73/23/EEC (LVD)
Approvals, RoHS: 2011/65/ES
Includes: Minimum Position Potentiometer

Accessories:
203709D2/U – Interface Module for Modutrol Motors
220736A/U – Internal Auxiliary Switch Assembly - 1 Switch
220736B/U – Internal Auxiliary Switch Assembly - 2 Switches
220738A/U – Adapter Bracket. Adjusts shaft height to match Modutrol III motors
221455A/U – Infinitely adjustable Motor Crank Arm
4074ERU/U – Weatherproofing kit. Protects motor from driving rain when mounted in any position. Not needed if motor is mounted upright.
50017460-001/U – 24/120/230 Vac Internal Transformers for Series 2 Motors
50017460-003/U – 120 Vac Internal Transformers for Series 2 Motors

Material Number	Torque Rating (lb-in.)	Torque Rating (Nm)	Supply Voltage	Timing, Nominal	Internal Auxiliary Switch	Factory Stroke Setting	Stroke	Internal Transformer	Comments
M7685A1025/U	60 lb-in.	6.8 Nm	24V	30 - 60 sec	0	90 degrees	Adjustable; 90 to 160 degrees, Asymmetrical	None	Minimum position potentiometer

Dimensions in inches (millimeters)

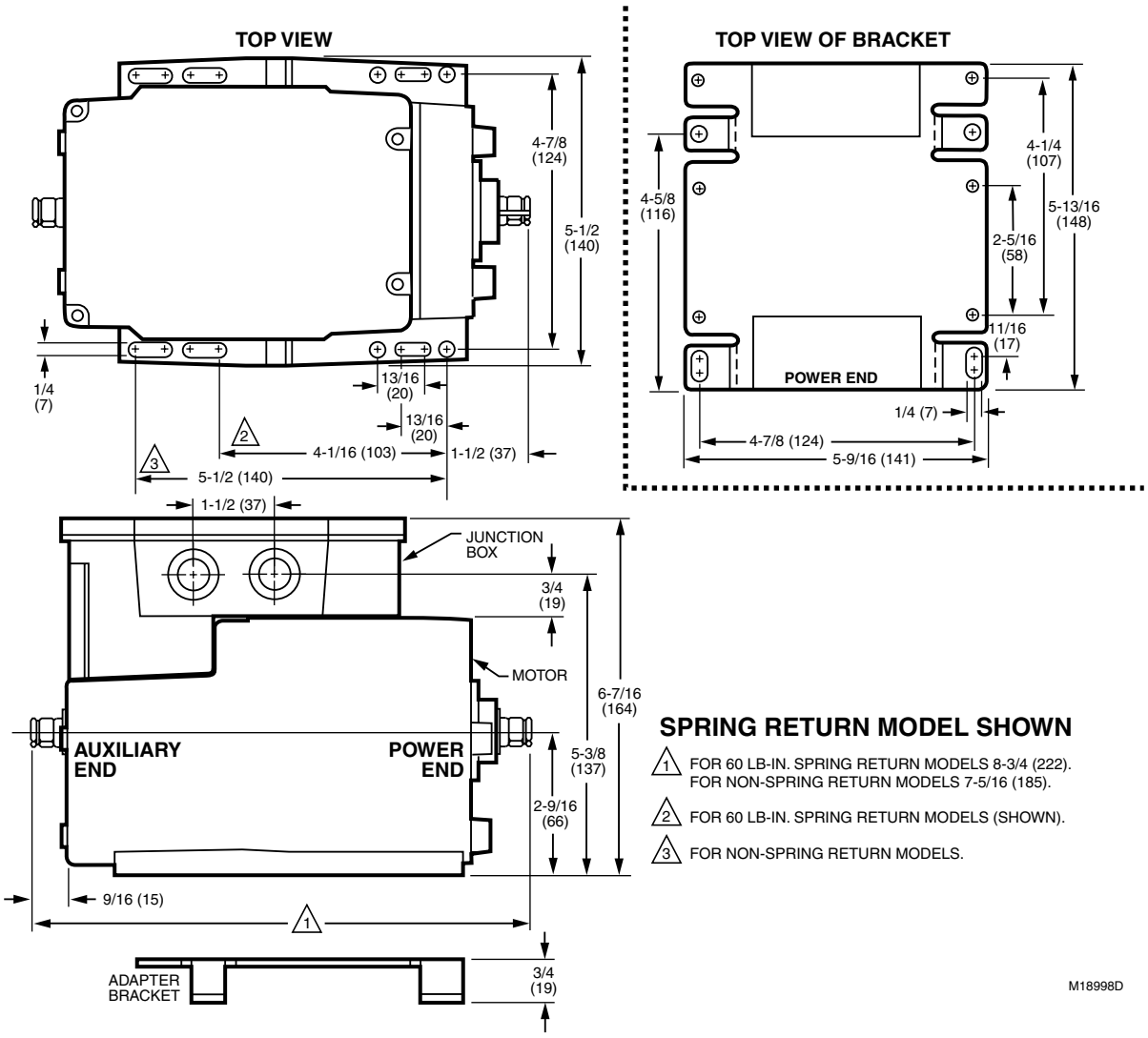

SPRING RETURN MODEL SHOWN

1. FOR 60 LB-IN. SPRING RETURN MODELS 8-3/4 (222). FOR NON-SPRING RETURN MODELS 7-5/16 (185).
2. FOR 60 LB-IN. SPRING RETURN MODELS (SHOWN).
3. FOR NON-SPRING RETURN MODELS.

Typical wiring for M7685 motors

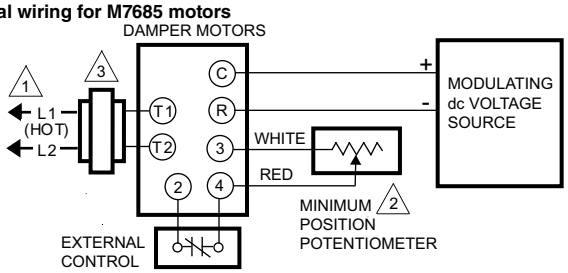

1. POWER SUPPLY. PROVIDE DISCONNECT MEANS AND OVERLOAD PROTECTION AS REQUIRED.
2. IF MINIMUM POSITION POTENTIOMENTER IS NOT USED, JUMPER TERMIALS 3 AND 4.
3. TRANSFORMER MAY BE INTERNAL OR EXTERNAL.

M13727A

M9164; M9174; M9184; M9191; M9194 Modutrol IV™ Motors

Series 90 Modutrol™ IV Motors are non-spring return modulating proportional control motors used with controllers that provide a Series 90 output to operate dampers or valves.

- Integral junction box provides NEMA 3 weather protection if motor is mounted in the upright position
- Motor and circuitry operate from 24 Vac
- Quick-connect terminals are standard; screw terminal adapter is available
- Adapter bracket for matching shaft height of older motors is available
- Motors have field adjustable stroke (90 to 160 degrees)
- Integral auxiliary switches are available factory mounted, or can be field added
- All models have dual shafts (slotted and tapped on both ends)
- All models have auxiliary switch cams
- Fixed torque throughout the entire voltage range

Application: Electric
Control Signal: Proportional, 135 ohm
Frequency: 50 Hz; 60 Hz
Fail Safe Mode: Non-Spring Return
Auxiliary Switch Ratings: AFL - 120 Vac – 7.2A; ALR - 120 Vac – 43.2A; AFL - 240 Vac – 3.6A; ALR - 240 Vac – 21.6A
External Auxiliary Switches Available: Yes
Mounting: Foot-mounted
Feedback: No
Shaft Dimensions: 0.375 in. Square (10 mm Square)
Motor shafts: 2; Dual-ended shaft
Deadweight Load on Shaft: Either End – 200 lbs.; Combined on both Shafts – 300 lbs.
Approximate, Dimensions: 6 7/16 in. high x 5 1/2 in. wide x 7 5/16 in. deep (164 mm high x 140 mm wide x 185 mm deep)
Ambient Temperature Range: -40°F to +150°F (-40°C to +60°C)
Approvals, Underwriters Laboratories Inc.: Listed: File No. E4436, Guide No. XAPX for USA and Canada
Approvals, CE: EN55011 (Emission) EN50082-2 (Immunity) 73/23/EEC (LVD)
Approvals, RoHS: 2011/65/ES

Accessories:
220736A/U – Internal Auxiliary Switch Assembly - 1 Switch
220736B/U – Internal Auxiliary Switch Assembly - 2 Switches
220738A/U – Adapter Bracket. Adjusts shaft height to match Modutrol III motors
220741A2-90/U – Screw Terminal Adapter Kit for Series 90 Modutrol IV Series 2 and Series 3 motors - Converts quick-connect terminals to screw terminals
221455A/U – Infinitely adjustable Motor Crank Arm
4074ERU/U – Weatherproofing kit. Protects motor from driving rain when mounted in any position. Not needed if motor is mounted upright.
50017460-001/U – 24/120/230 Vac Internal Transformers for Series 2 Motors
50017460-003/U – 120 Vac Internal Transformers for Series 2 Motors
Q7130A1006/U – Interface Module (4-7, 6-9 or 10.5-13.5 Vdc Control)
Q7230A1005/U – Interface Module (4-20 mA or 2-10 Vdc Control)
Q7330A1004/U – Interface Module (W936 or W945 Control)

Material Number	Torque Rating (lb-in.)	Torque Rating (Nm)	Power Consumption	Timing, Nominal	Internal Auxiliary Switch	Factory Stroke Setting	Shaft Rotation (upon control signal increase)	Electrical Connections	Internal Transformer	Weight	Includes	Supply Voltage	Tradeline Value	Stroke
M9164A1005/U	35 lb-in.	4 Nm	Driving – 10 VA	30 - 60 sec	0	90 degrees	Clockwise (as viewed from power end) (normally closed)	Quick-connect terminals	50004263-003	7.5 lb	Transformer	120V		Adjustable; 90 to 160 degrees, Asymmetrical
M9164A1013/U	35 lb-in.	4 Nm	Driving – 10 VA	30 - 60 sec	0	160 degrees	Clockwise (as viewed from power end) (normally closed)	Quick-connect terminals	50004263-001	7.5 lb	Transformer	24V; 120V; 230V		Adjustable; 90 to 160 degrees, Asymmetrical
M9164A1070/U	35 lb-in.	4 Nm	Driving – 10 VA	30 - 60 sec	0	160 degrees	Clockwise (as viewed from power end) (normally closed)	Quick-connect terminals	None	6.5 lb		24V		Adjustable; 90 to 160 degrees, Asymmetrical
M9164C1001/U	35 lb-in.	4 Nm	Driving – 10 VA	30 - 60 sec	2	160 degrees	Clockwise (as viewed from power end) (normally closed)	Quick-connect terminals	None	6.5 lb		24V		Adjustable; 90 to 160 degrees, Asymmetrical
M9164C1068/U	35 lb-in.	4 Nm	Driving – 10 VA	30 - 60 sec	2	90 degrees	Clockwise (as viewed from power end) (normally closed)	Quick-connect terminals	50004263-003	7.5 lb	Transformer	120V		Adjustable; 90 to 160 degrees, Asymmetrical
M9164D1009/U	35 lb-in.	4 Nm	Driving – 10 VA	30 - 60 sec	0	160 degrees	Counter-clockwise (as viewed from power end) (normally open)	Quick-connect terminals	None	6.5 lb		24V	Tradeline	Adjustable; 90 to 160 degrees, Asymmetrical
M9174B1027/U	75 lb-in.	8.5 Nm	Driving – 12 VA	30 - 60 sec	1	90 degrees	Clockwise (as viewed from power end) (normally closed)	Quick-connect terminals	50004263-003	7.5 lb	Transformer	120V		Adjustable; 90 to 160 degrees, Asymmetrical

Modutrol IV Motors

Material Number	Torque Rating (lb-in.)	Torque Rating (Nm)	Power Consumption	Timing, Nominal	Internal Auxiliary Switch	Factory Stroke Setting	Shaft Rotation (upon control signal increase)	Electrical Connections	Internal Transformer	Weight	Includes	Supply Voltage	Tradeline Value	Stroke
M9174C1025/U	75 lb-in.	8.5 Nm	Driving – 12 VA	30 - 60 sec	2	90 degrees	Clockwise (as viewed from power end) (normally closed)	Quick-connect terminals	50004263-003	7.5 lb	Transformer	120V		Adjustable; 90 to 160 degrees, Asymmetrical
M9174C1033/U	75 lb-in.	8.5 Nm	Driving – 12 VA	30 - 60 sec	2	160 degrees	Clockwise (as viewed from power end) (normally closed)	Quick-connect terminals	50004263-003	7.5 lb	Transformer	120V		Adjustable; 90 to 160 degrees, Asymmetrical
M9174C1041/U	75 lb-in.	8.5 Nm	Driving – 12 VA	30 - 60 sec	2	90 degrees	Clockwise (as viewed from power end) (normally closed)	Quick-connect terminals	50004263-003	7.5 lb	Transformer	120V		Adjustable; 90 to 160 degrees, Asymmetrical
M9174D1007/U	75 lb-in.	8.5 Nm	Driving – 12 VA	30 - 60 sec	0	160 degrees	Clockwise (as viewed from power end) (normally closed)	Quick-connect terminals	None	6.5 lb		24V	Tradeline	Adjustable; 90 to 160 degrees, Asymmetrical
M9174F1001/U	75 lb-in.	8.5 Nm	Driving – 17 VA	30 - 53 sec	2	160 degrees	Clockwise (as viewed from power end) (normally closed)	Screw terminals	None	6.5 lb		24V		Adjustable; 90 to 160 degrees, Asymmetrical
M9184A1019/U	150 lb-in.	17 Nm	Driving – 15 VA	30 - 60 sec	0	160 degrees	Clockwise (as viewed from power end) (normally closed)	Quick-connect terminals	None	6.5 lb		24V		Adjustable; 90 to 160 degrees, Asymmetrical
M9184B1017/U	150 lb-in.	17 Nm	Driving – 15 VA	30 - 60 sec	1	90 degrees	Clockwise (as viewed from power end) (normally closed)	Quick-connect terminals	None	6.5 lb		24V		Adjustable; 90 to 160 degrees, Symmetrical
M9184C1031/U	150 lb-in.	17 Nm	Driving – 15 VA	30 - 60 sec	2	90 degrees	Clockwise (as viewed from power end) (normally closed)	Quick-connect terminals	None	6.5 lb		24V		Adjustable; 90 to 160 degrees, Symmetrical
M9184D1005/U	75 lb-in.	8.5 Nm	Driving – 15 VA	15 - 30 sec	0	90 degrees	Clockwise (as viewed from power end) (normally closed)	Quick-connect terminals	None	6.5 lb		24V		Adjustable; 90 to 160 degrees, Symmetrical
M9184D1021/U	150 lb-in.	17 Nm	Driving – 15 VA	30 - 60 sec	0	160 degrees	Clockwise (as viewed from power end) (normally closed)	Quick-connect terminals	None	6.5 lb		24V	Tradeline	Adjustable; 90 to 160 degrees, Symmetrical
M9184D4009/U	150 lb-in.	17 Nm	Driving – 15 VA	30 - 60 sec	0	160 degrees	Clockwise (as viewed from power end) (normally closed)	Quick-connect terminals	None	6.5 lb		24V	Tradeline	Adjustable; 90 to 160 degrees, Symmetrical
M9184E4006/U	150 lb-in.	17 Nm	Driving – 15 VA	30 - 60 sec	1	160 degrees	Clockwise (as viewed from power end) (normally closed)	Quick-connect terminals	None	6.5 lb		24V	Tradeline	Adjustable; 90 to 160 degrees, Symmetrical
M9184F1034/U	150 lb-in.	17 Nm	Driving – 15 VA	30 - 60 sec	2	90 degrees	Clockwise (as viewed from power end) (normally closed)	Quick-connect terminals	None	6.5 lb		24V		Adjustable; 90 to 160 degrees, Symmetrical
M9191F1001/U	300 lb-in.	34 Nm	Driving – 15 VA	60 - 120 sec	2	90 degerees	Clockwise (as viewed from power end) (normally closed)	Quick-connect terminals	None	6.5 lb		24V		Adjustable; 90 to 160 degrees, Symmetrical
M9194C1005/U	300 lb-in.	34 Nm	Driving – 15 VA	60 - 120 sec	2	90 degrees	Clockwise (as viewed from power end) (normally closed)	Quick-connect terminals	50004263-002	7.5 lb	Transformer	120V		Adjustable; 90 to 160 degrees, Symmetrical
M9194D1003/U	300 lb-in.	34 Nm	Driving – 15 VA	120 - 240 sec	0	160 degrees	Clockwise (as viewed from power end) (normally closed)	Quick-connect terminals	None	6.5 lb		24V	Tradeline	Adjustable; 90 to 160 degrees, Symmetrical

Material Number	Torque Rating (lb-in.)	Torque Rating (Nm)	Power Consumption	Timing, Nominal	Internal Auxiliary Switch	Factory Stroke Setting	Shaft Rotation (upon control signal increase)	Electrical Connections	Internal Transformer	Weight	Includes	Supply Voltage	Tradeline Value	Stroke
M9194E1000/U	300 lb-in.	34 Nm	Driving – 15 VA	120 - 240 sec	1	90 degrees	Clockwise (as viewed from power end) (normally closed)	Quick-connect terminals	None	6.5 lb		24V		Adjustable; 90 to 160 degrees, Symmetrical

Dimensions in inches (millimeters)

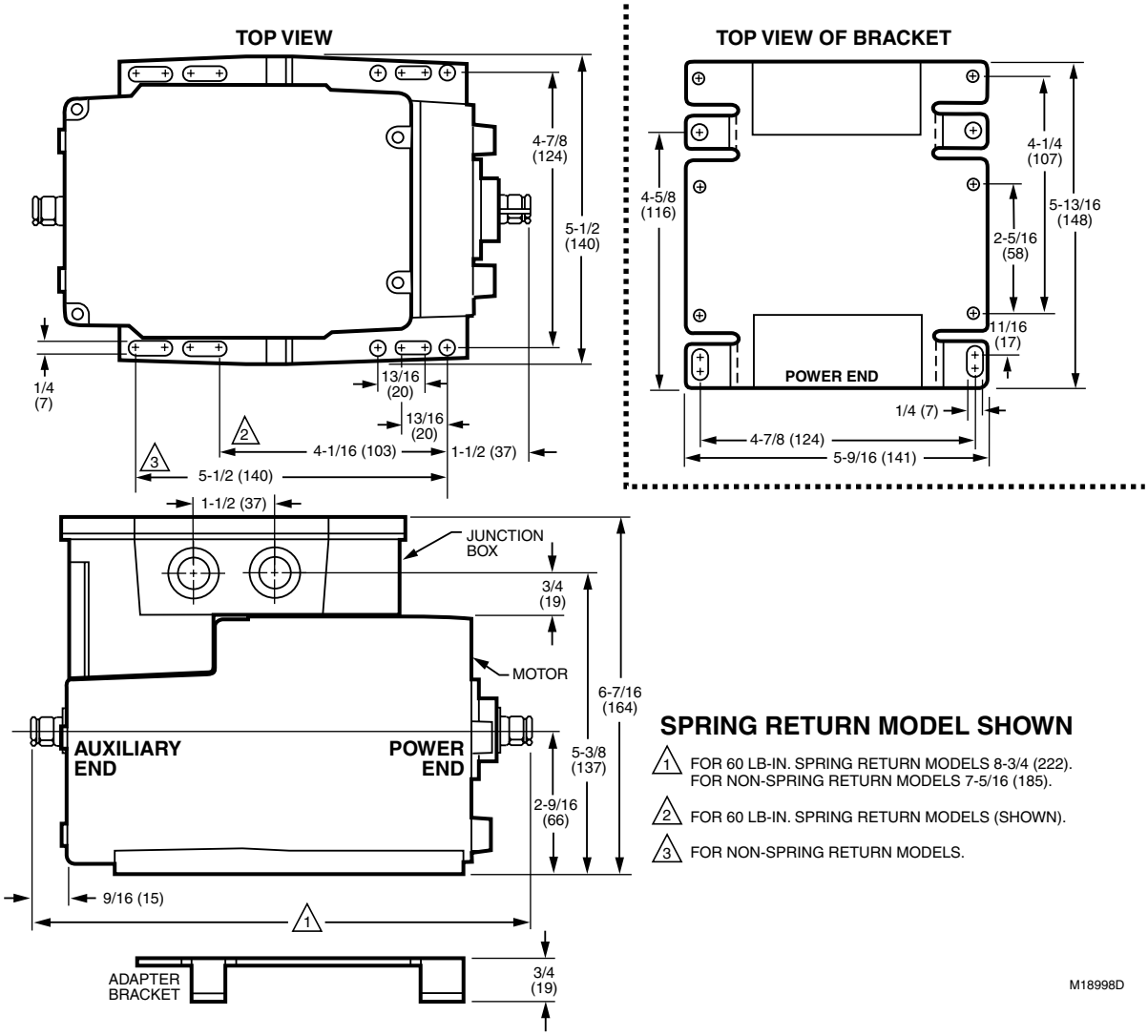

SPRING RETURN MODEL SHOWN

1. FOR 60 LB-IN. SPRING RETURN MODELS 8-3/4 (222). FOR NON-SPRING RETURN MODELS 7-5/16 (185).
2. FOR 60 LB-IN. SPRING RETURN MODELS (SHOWN).
3. FOR NON-SPRING RETURN MODELS.

Modutrol IV Motors

Dimensions in inches (millimeters)

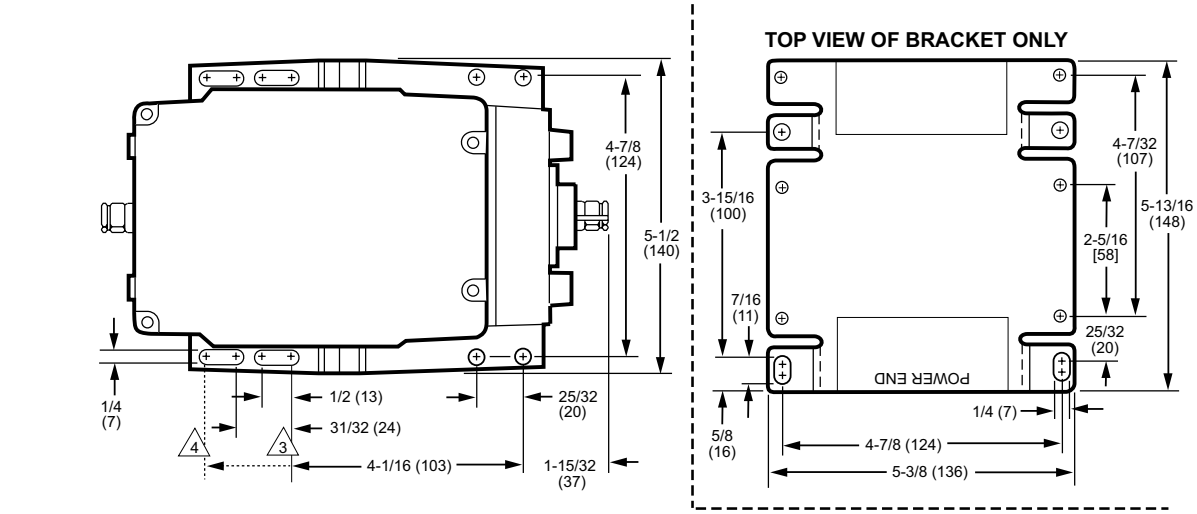

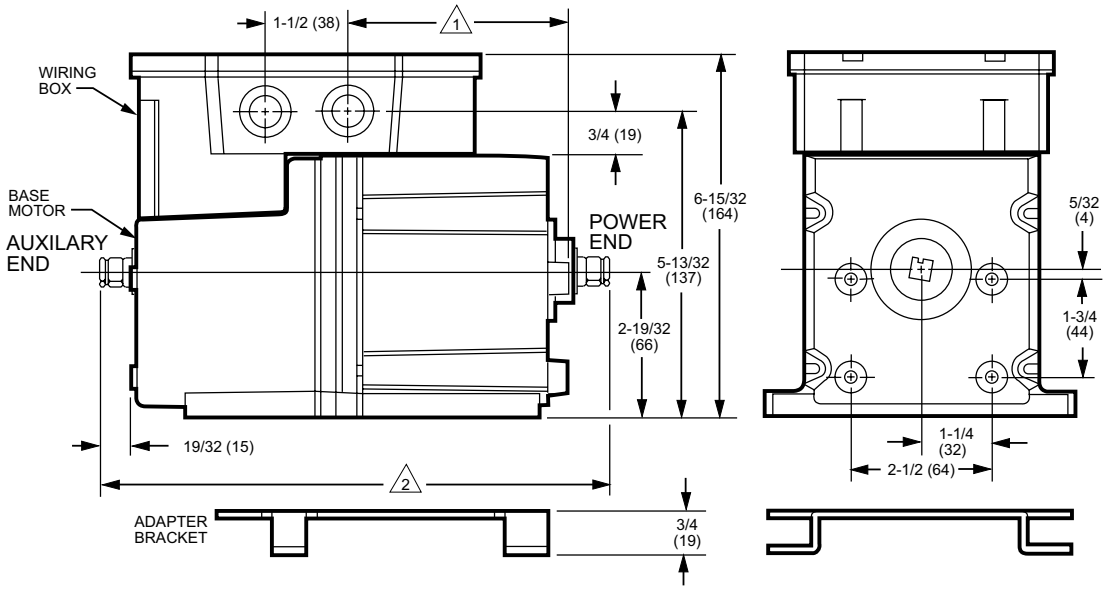

SPRING RETURN MODEL SHOWN

1. FOR SPRING RETURN MODELS 3-29/32 (98); FOR NON-SPRING RETURN MODELS 2-13/32 (61).
2. FOR SPRING RETURN MODELS 8-3/4 (223); FOR NON-SPRING RETURN MODELS 7-5/16 (185).
3. FOR SPRING RETURN MODELS.
4. FOR NON-SPRING RETURN MODELS.

M451E

Wiring for Potentiometer Control

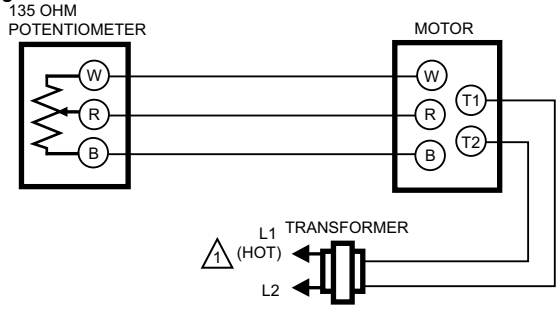

1. POWER SUPPLY. PROVIDE DISCONNECT MEANS AND OVERLOAD PROTECTION AS REQUIRED.
2. TRANSFORMER MAY BE INTERNAL OR EXTERNAL

M13708

Typical wiring for Series 90 motors

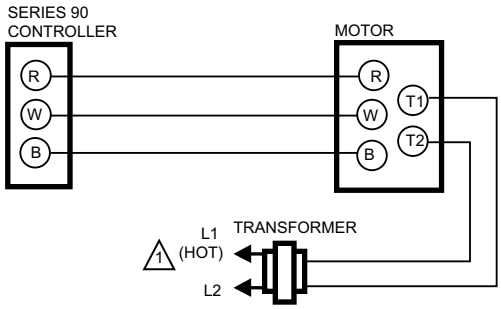

1. POWER SUPPLY. PROVIDE DISCONNECT MEANS AND OVERLOAD PROTECTION AS REQUIRED.
2. TRANSFORMER MAY BE INTERNAL OR EXTERNAL

M770A

M9175; M9182; M9185 Modutrol IV™ Motors

Series 90 Modutrol IV™ Motors are spring return modulating proportional control motors used with controllers that provide a Series 90 output to operate dampers or valves.

- Integral junction box provides NEMA 3 weather protection if motor is mounted in the upright position
- Integral spring return in the event of power failure
- Motor and circuitry operate from 24 Vac
- Quick-connect terminals are standard; screw terminal adapter is available
- Adapter bracket for matching shaft height of older motors is available
- Motors have field adjustable stroke (90 to 160 degrees)
- Integral auxiliary switches are available factory mounted, or can be field added
- Spring return motors can operate valve linkages from power end or normally open valve applications
- All models have dual shafts (slotted and tapped on both ends)
- All models have auxiliary switch cams
- Fixed torque throughout the entire voltage range

Application: Electric
Control Signal: Proportional, 135 ohm
Frequency: 50 Hz; 60 Hz
Fail Safe Mode: Spring Return
Auxiliary Switch Ratings: AFL - 120 Vac – 7.2A; ALR - 120 Vac – 43.2A; AFL - 240 Vac – 3.6A; ALR - 240 Vac – 21.6A
External Auxiliary Switches Available: Yes
Shaft Rotation (upon control signal increase): Clockwise (as viewed from power end) (normally closed)
Mounting: Foot-mounted
Feedback: No
Shaft Dimensions: 0.375 in. Square (10 mm Square)
Motor shafts: 2; Dual-ended shaft
Deadweight Load on Shaft: Either End – 200 lbs.; Combined on both Shafts – 300 lbs.
Internal Transformer: None
Weight: 8.5 lb
Approximate, Dimensions: 6 7/16 in. high x 5 1/2 in. wide x 8 1/4 in. deep (164 mm high x 140 mm wide x 210 mm deep)
Ambient Temperature Range: -40°F to +150°F (-40°C to +60°C)
Approvals, Underwriters Laboratories Inc.: Listed: File No. E4436, Guide No. XAPX for USA and Canada
Approvals, CE: EN55011 (Emission) EN50082-2 (Immunity) 73/23/EEC (LVD)
Approvals, RoHS: 2011/65/ES
Supply Voltage: 24V

Accessories:
220736A/U – Internal Auxiliary Switch Assembly - 1 Switch
220736B/U – Internal Auxiliary Switch Assembly - 2 Switches
220738A/U – Adapter Bracket. Adjusts shaft height to match Modutrol III motors
220741A2-90/U – Screw Terminal Adapter Kit for Series 90 Modutrol IV Series 2 and Series 3 motors - Converts quick-connect terminals to screw terminals
221455A/U – Infinitely adjustable Motor Crank Arm
4074ERU/U – Weatherproofing kit. Protects motor from driving rain when mounted in any position. Not needed if motor is mounted upright.
50017460-001/U – 24/120/230 Vac Internal Transformers for Series 2 Motors
50017460-003/U – 120 Vac Internal Transformers for Series 2 Motors
Q7230A1005/U – Interface module, provides adjustable zero and span, voltage or current control
Q7130A1006/U – Interface Module (4-7, 6-9 or 10.5-13.5 Vdc Control)
Q7230A1005/U – Interface Module (4-20 mA or 2-10 Vdc Control)
Q7330A1004/U – Interface Module (W936 or W945 Control)

Material Number	Torque Rating (lb-in.)	Torque Rating (Nm)	Power Consumption	Timing, Nominal	Internal Auxiliary Switch	Factory Stroke Setting	Electrical Connections	Stroke	Spring Return Timing	Includes	Tradeline Value
M9182A1011/U	60 lb-in.	6.8 Nm	Driving – 20 VA	30 - 60 sec	0	160 degrees	Quick-connect terminals	Adjustable; 90 to 160 degrees, Asymmetrical			
M9182D1023/U	60 lb-in.	6.8 Nm	Driving – 20 VA	60 - 120 - 240 sec	0	160 degrees	Quick-connect terminals	Adjustable; 90 to 160 degrees, Asymmetrical	Nominal – 60 sec		
M9185A1018/U	60 lb-in.	6.8 Nm	Driving – 20 VA	30 - 60 sec	0	160 degrees	Quick-connect terminals	Adjustable; 90 to 160 degrees, Asymmetrical			
M9185C1006/U	60 lb-in.	6.8 Nm	Driving – 20 VA	30 - 60 sec	2	160 degrees	Quick-connect terminals	Adjustable; 90 to 160 degrees, Asymmetrical			
M9185D1004/U	60 lb-in.	6.8 Nm	Driving – 20 VA	30 - 60 sec	0	160 degrees	Quick-connect terminals	Adjustable; 90 to 160 degrees, Asymmetrical			Tradeline
M9185D4008/U	60 lb-in.	6.8 Nm	Driving – 20 VA	30 - 60 sec	0	160 degrees	Quick-connect terminals	Adjustable; 90 to 160 degrees, Asymmetrical			Tradeline
M9185E1019/U	60 lb-in.	6.8 Nm	Driving – 20 VA	30 - 60 sec	1	90 degrees	Quick-connect terminals	Adjustable; 90 to 160 degrees, Asymmetrical			

Modutrol IV Motors

Dimensions in inches (millimeters)

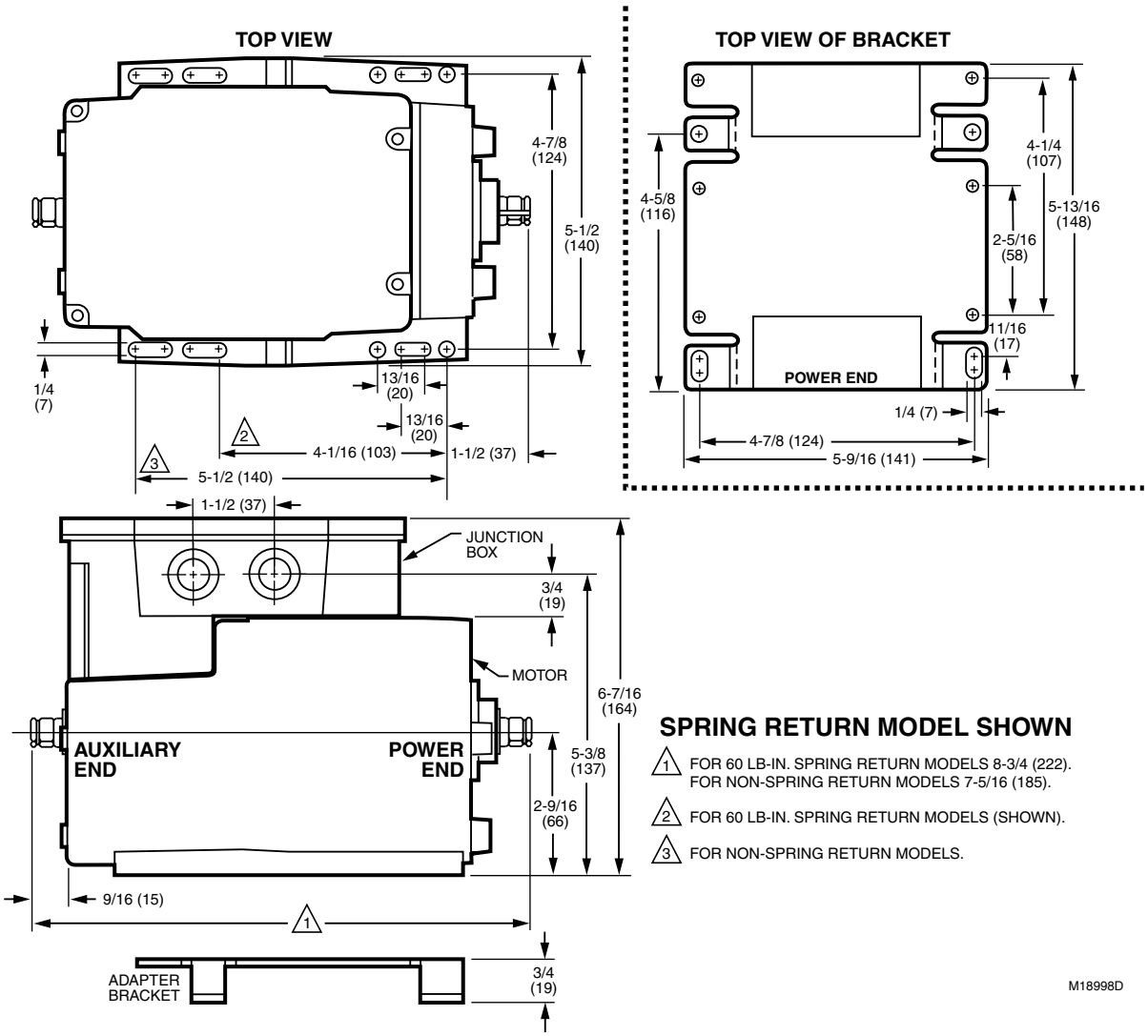

SPRING RETURN MODEL SHOWN

1. FOR 60 LB-IN. SPRING RETURN MODELS 8-3/4 (222). FOR NON-SPRING RETURN MODELS 7-5/16 (185).
2. FOR 60 LB-IN. SPRING RETURN MODELS (SHOWN).
3. FOR NON-SPRING RETURN MODELS.

Wiring for Potentiometer Control

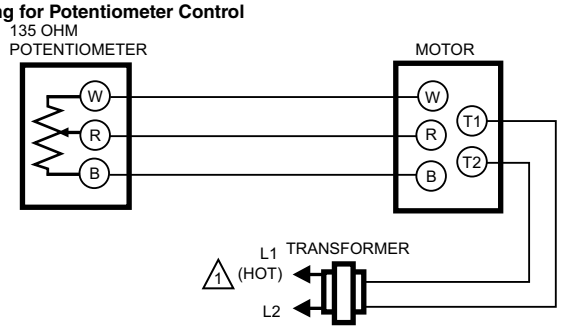

1. POWER SUPPLY. PROVIDE DISCONNECT MEANS AND OVERLOAD PROTECTION AS REQUIRED.
2. TRANSFORMER MAY BE INTERNAL OR EXTERNAL

M13708

Typical wiring for Series 90 motors

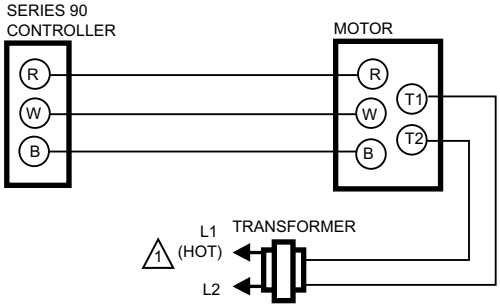

1. POWER SUPPLY. PROVIDE DISCONNECT MEANS AND OVERLOAD PROTECTION AS REQUIRED.
2. TRANSFORMER MAY BE INTERNAL OR EXTERNAL

M770A

Foot Mounted Motor Accessories

Material Number	Description	Used With	
203709D2/U	Screw Terminal Adapter for Series 70 Mod IV Motors with Adjustable Zero and Span	Series 2 and Series 3 Modutrol IV™ motors	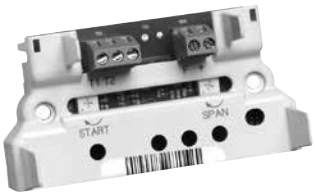
220738A/U	Adapter Bracket. Adjusts shaft height to match Modutrol III motors	Mod IV Actuator to match shaft height of Mod III Actuator	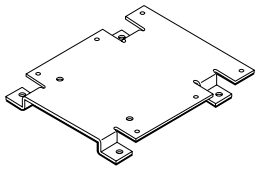 220738 M11550
220741A2-61/U	Screw Terminal Adapter Kit for Series 61 Modutrol IV Series 2 motors - Converts quick-connect terminals to screw terminals	Series 61 Mod IV Motor	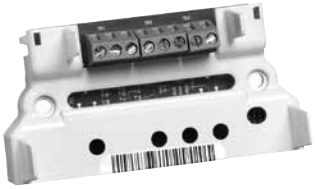
220741A2-62/U	Screw Terminal Adapter Kit for Series 62 Series Modutrol IV Series 2 motors - Converts quick-connect terminals to screw terminals	Series 62 Mod IV Motor	
220741A2-71/U	Screw Terminal Adapter Kit for Series 71 Modutrol IV Series 2 motors - Converts quick-connect terminals to screw terminals	Series 71 Mod IV Motor	
220741A2-72/U	Screw Terminal Adapter Kit for Series 72 Modutrol IV Series 2 motors - Converts quick-connect terminals to screw terminals	Series 72 Mod IV Motor	
220741A2-90/U	Screw Terminal Adapter Kit for Series 90 Modutrol IV Series 2and Series 3 motors - Converts quick-connect terminals to screw terminals	Series 90 Mod IV Motor	
220741A2-TP/U	Screw Terminal Adapter Kit for 2 position Modutrol IV Series 2 motors - Converts quick-connect terminals to screw terminals	Two Position for use with M4XXX and M8XXX Mod IV Motors	
221455A/U	Infinitely adjustable Motor Crank Arm	Modutrol IV Motors	
221508A2/U	Resistor board for use with Modutrol IV motors. One board can be configured to drive up to 6 motors in parallel from a series 90 controller, drive up to 4 motors from a 4-20 mA controller or drive up to 3 motors from a W973 controller.	Series 2 and Series 3 Modutrol IV™ motors	
4074ERU/U	Weatherproofing kit. Protects motor from driving rain when mounted in any position. Not needed if motor is mounted upright.	Fits all Modutrol IV motors.	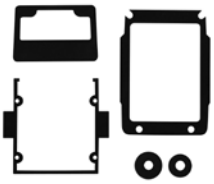
7617DM/U	Coupling - Must be used with ES650117 explosion-proof housing	ES650117	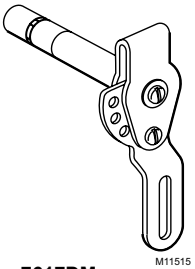 M11515 7617DM

198162 Internal Transformer for Series 1 Motors

Application: Internal Transformer
Ambient Temperature Range: 0°F to 131°F (-18°C to +55°C)

Material Number	Supply Voltage	Control Signal	Includes	Comments	
198162AA/U	120 or 208 or 240 Vac at 50 or 60 Hz	SPST, On/Off switch	Transformer, screws, instructions for mounting internally in Modutrol IV Series 1 motors	For Mod IV Series 2 and 3 actuators, use 50017460-001	
198162EA/U	120 Vac at 50 or 60 Hz	SPST, On/Off switch	Transformer, screws, instructions for mounting internally in Modutrol IV Series 1 motors	For Mod IV Series 2 and 3 actuators, use 50017460-003	
198162GA/U	220 Vac at 50 or 60 Hz	SPST, On/Off switch	Transformer, screws, instructions for mounting internally in Modutrol IV Series 1 motors	For Mod IV Series 2 and 3 actuators, use 50017460-001	
198162JA/U	24 Vac (for electrical isolation)	SPST, On/Off switch	Transformer, screws, instructions for mounting internally in Modutrol IV Series 1 motors	For Mod IV Series 2 and 3 actuators, use 50017460-001	

220736 Internal Auxiliary Switch Kits

Application: Internal Auxiliary Switch Kits
Auxiliary Switch Ratings: AFL - 120 Vac – 7.2A; ALR - 120 Vac – 43.2A; AFL - 240 Vac – 3.6A; ALR - 240 Vac – 21.6A
Power Consumption: Driving – 20 VA
Weight: 0.3 lb
Ambient Temperature Range: 0°F to 131°F (-18°C to +55°C)

Material Number	Electrical Connections	Control Signal	Includes	Used With
220736A/U	15 in (381 mm) Lead Wires	SPDT, On/Off switch	One Micro Switch V3 precision switch, which is actuated by adjustable cams inside the motor.	TRADELINE Modutrol IV Motors
220736B/U	15 in (381 mm) Lead Wires	SPDT, On/Off switch	Two Micro Switch V3 precision switches, which are actuated by adjustable cams inside the motor.	TRADELINE Modutrol IV Motors

50017460 Internal Transformers for Series 2 and 3 Motors

Application: Internal Transformer
Frequency: 50 Hz; 60 Hz
Mounting: Internal mount to Modutrol IV Motors
Ambient Temperature Range: 0°F to 131°F (-18°C to +55°C)

Material Number	Supply Voltage	Control Signal	Includes	Used With
50017460-001/U	24 Vac; 120 Vac; 230 Vac	SPST, On/Off switch	Transformer, screws, instructions for mounting internally in Modutrol IV™ Series 2 and 3 motors	Series 2 and Series 3 Modutrol IV™ motors
50017460-003/U	120 Vac	SPST, On/Off switch	Transformer, screws, instructions for mounting internally in Modutrol IV™ Series 2 and 3 motors	Series 2 and Series 3 Modutrol IV™ motors

Q181 Auxiliary Potentiometer for Modutrol Motors

Controls from one to four Modutrol (Series 90) motors from one master motor.

- Compatible with Modutrol III and Modutrol IV motors.
- Mounts on master motor and operates controlled motors in unison or in sequence.
- Controls motors with mechanical balance relay and solid state drive circuit.
- Use with 24V motors.

Application: Electro-mechanical
Mounting: External mount to Modutrol IV Motors

Approximate, Dimensions: 3 3/16 in. high x 3 1/4 in. wide x 3 3/8 in. deep (81 mm high x 83 mm wide x 86 mm deep)
Approvals, CE: Report: GV97-011

Material Number	Electrical Connections	Control Signal	Weight	Includes	Comments	Used With
Q181A1007/U	Screw terminals	SPST, On/Off switch	1.38 lb	Cover	For controlling one Modutrol motor	Series 90
Q181A1015/U	Screw terminals	SPST, On/Off switch	1.56 lb	Cover	For controlling two Modutrol motors	Series 90
Q181A1064/U	Screw terminals	SPST, On/Off switch	1.25 lb		For controlling up to three Modutrol motors	Series 90

Q209 Manual Potentiometer for Modutrol Motors

Used to limit minimum position of a proportioning Modutrol motor.

- Mount directly in motor.
- All wiring is accomplished within motor wiring compartment.
- Color-coded leadwires.

Application: Electro-mechanical
Approvals, CE: Report: GV97-011

Material Number	Electrical Connections	Control Signal	Mounting	Weight	Approximate, Dimensions	Includes	Used With
Q209A1022/U	Screw terminals	SPST, On/Off switch	Internal mount to Modutrol IV Motors	0.2 lb	3 1/4 in. high x 3 3/8 in. wide x 3 7/8 in. deep (83 mm high x 86 mm wide x 98 mm deep)	150 ohm Potentiometer, leadwires and bracket	M9184; M9185; M6284; M6285
Q209A1030/U	Screw terminals	SPST, On/Off switch	Internal mount to Modutrol IV Motors	0.25 lb	3 1/4 in. high x 3 3/8 in. wide x 3 7/8 in. deep (83 mm high x 86 mm wide x 98 mm deep)	300 ohm Potentiometer, leadwires and bracket	M9184; M9185; M6284; M6285
Q209E1002/U	Quick-connect terminals with lead wires	SPST, On/Off switch	External mount to Modutrol IV Motors	0.5 lb	1 in. high x 4 1/2 in. wide x 6 1/4 in. deep (25 mm high x 114 mm wide x 159 mm deep)	150 ohm Potentiometer, factory mounted on a wiring cover box	
Q209E1010/U	Quick-connect terminals with lead wires	SPST, On/Off switch	External mount to Modutrol IV Motors	0.5 lb	1 in. high x 4 1/2 in. wide x 6 1/4 in. deep (25 mm high x 114 mm wide x 159 mm deep)	300 Ohm Potentiometer, Factory Mounted on a wiring cover box	

Q607 Auxiliary Switches for Modutrol Motors

For control of auxiliary equipment as a function of Modutrol motor shaft position.

- Compatible with Modutrol III and Modutrol IV motors. (Requires 220738A adapter bracket for use with Modutrol IV motors).
- Micro Switch precision switches, adjustable.
- Indicate motor position by use of a scale plate anchored to a common shaft, which allows Q607 to be adjusted for operational sequence before mounting.
- Adjustable plate allows universal mounting on either end of motor.
- Wrap-around cover for easy access to switch adjustments and wiring.
- Maintenance-free protection of the switches and cams.

Application: Electro-mechanical
Control Signal: SPDT, On/Off switch
Auxiliary Switch Ratings: AFL - 120 Vac – 9.8A; ALR - 120 Vac – 58.8A; AFL - 240 Vac – 4.9A; ALR - 240 Vac – 29.4A
Mounting: Cover or gear end
Approximate, Dimensions: 6 7/16 in. high x 5 3/16 in. wide x 2 1/8 in. deep (164 mm high x 132 mm wide x 54 mm deep)
Approvals, Underwriters Laboratories Inc.: Listed File: E4436, Guide: XAPX2
Approvals, CSA: Certified: File No. LR1620

Material Number	Electrical Connections	Internal Auxiliary Switch	Weight	Tradeline Value	Includes	Comments
Q607A1050/U	Screw terminals	1	2.5 lb		Revised mounting bracket	Post 1969 Honeywell Modutrol Motors
Q607A1068/U	Screw terminals	1	2.5 lb		With adapter for cover end spring return motor and revised mounting bracket	
Q607A1076/U	Screw terminals	1	2.5 lb	Tradeline	With adapter for cover end spring return motor and revised mounting bracket	Post 1969 Honeywell Modutrol Motors
Q607B1067/U	Screw terminals	2	2.4 lb		Revised mounting bracket	Pre/Post 1969 Honeywell Modutrol Motors
Q607B1075/U	Screw terminals	2	2.63 lb		With adapter for cover end spring return motor and revised mounting bracket	
Q607B1083/U	Screw terminals	2	2.8 lb	Tradeline	With adapter for cover end spring return motor and revised mounting bracket	
Q607C1009/U	Terminal Board	1	2.16 lb		Special terminal panel and metric grounding screws	
Q607D1008/U	Terminal Board	2	2.25 lb		Special terminal panel and metric grounding screws	

S443 Manual Potentiometer for Modutrol Motors

Used for remote manual control of proportioning (Series 90) motors and relays.

- Compatible with Modutrol III and Modutrol IV motors.
- Select automatic or manual control with DPST toggle switch.
- Suitable for Series 90, M7685; and M7285 motors controlled by 135 ohm inputs.
- Surface mounted, with conduit outlet on each side of case. Screw terminals.
- Scale marked OPEN-CLOSE.

Application: Electric
Mounting: Surfaced mounted with conduit knock-outs
Weight: 1.3 lb
Approximate, Dimensions: Including Knob 3 3/4 in. high, 3 3/8 in. wide, 3 1/4 in. deep. **Fits inside wiring junction box of Modutrol IV Motor (Including Knob 95 mm high, 86 mm wide, 83 mm deep. **Fits inside wiring junction box of Modutrol IV Motor)
Ambient Temperature Range: -40°F to +150°F (-40°C to +60°C)

Internal schematic of S443A

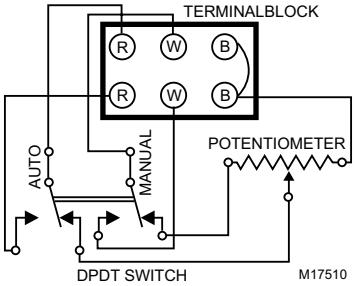

Material Number	Electrical Connections	Control Signal	Comments	Used With
S443A1007/U	Screw terminals	SPST, On/Off switch	2 position manual switch	M9164; M9484; M9184; M9185 and motors replaced by these motors

Q7130; Q7230; and Q7330 Interface Modules for Series 90 Modutrol IV Motors

For converting Series 90 Modutrol IV motors to Series 70 (electronic) control.

- Mounts and works inside wiring box of any series 90 Modutrol IV Motor
- Protected from weather by motor's NEMA 3 wiring box
- Mates to motor's quick-connect terminals and provides screw terminals for control wiring connections
- Features solid-state circuitry with surface mount components
- Cover holds module in place, screws not required
- Includes (except Q7330A) reversing switch to allow replacement of electrically normally open or electrically normally closed motors

Application: Electric
Frequency: 50 Hz; 60 Hz
Mounting: Mounts to quick-connects inside Mod Motor
Power Consumption: Driving – 2 VA
Approximate, Dimensions: Fits inside wiring junction box of Modutrol IV Motor
Ambient Temperature Range: -40°F to +150°F (-40°C to +60°C)

Material Number	Electrical Connections	Control Signal	Weight	Used With
Q7130A1006/U	Terminal Board	Provides selectable voltage ranges: 4 to 7, 6 to 9, or 10.5 to 13.5 Vdc. Adapts M91XX to function as M71XX model.	0.3 lb	Used with M91XX Modutrol IV Motor to replace M71XX Motor applications. Module controls only one motor.
Q7230A1005/U	Terminal Board	Provides adjustable zero & span, voltage or current control (includes 2-10 Vdc or 4-20 mA). Adapts M91XX to function as M72XX model.	0.3 lb	Used with M91XX Modutrol IV Motor to replace M72XX Motor applications. Module controls only one motor.
Q7330A1004/U	Terminal Board	Provides interface to W936 Control. Adapts M91XX to function as M73XX model.	0.3 lb	Used with M91XX Modutrol IV Motor to replace M73XX Motor applications. Module controls only one motor.

M436; M836 Damper Motors

Spring return motors for two-position back draft, outdoor air changeover, zone or minimum position damper control.

- Operate outdoor air dampers for combustion or makeup air in residential and light commercial applications.
- Operate changeover dampers for heating and cooling systems.
- Operate minimum position dampers for ventilation and similar applications.
- Include internal SPDT switch for controlling auxiliary equipment, additional motors, or to provide a burner interlock switch.
- Spring returns motor to start position on power failure.
- Drive shafts located on both sides of motor.
- Adjustable auxiliary switch for cascading motors or operating auxiliary equipment.
- Thermal breaker for overload protection during lifting stroke or if motor stalls.

Control Signal: Two position, SPST
Frequency: 60 Hz
Fail Safe Mode: Spring Return
Additional Torque Ratings (lb-in.): Breakaway – 30 lb-in.
Additional Torque Ratings (Nm): Breakaway – 3.3 Nm
Internal Auxiliary Switch: 1
Auxiliary Switch Ratings: AFL - 120 Vac – 7.2A; ALR - 120 Vac – 43.2A; AFL - 240 Vac – 3.6A; ALR - 240 Vac – 21.6A
External Auxiliary Switches Available: Yes
Stroke: Angle of Rotation – 75 degrees maximum
Electrical Connections: Screw terminals

Mounting: Foot-mounted, Any position where the output shaft is horizontal
Spring Return Timing: Maximum – 25 sec
Motor shafts: 2, Hexagonal shape
Weight: 4 lb 10 oz (2.1 kg)
Approximate, Dimensions: 4 1/2 in. high x 4 5/8 in. wide x 3 3/4 in. deep (114 mm high x 118 mm wide x 95 mm deep)
Operating Temperature Range: 32°F to 125°F (0°C to 52°C)
Approvals, Underwriters Laboratories Inc.: Listed File: E4436, Guide: XAPX
Operating Humidity Range (% RH): 5 to 95% RH

Material Number	Torque Rating (lb-in.)	Torque Rating (Nm)	Supply Voltage	Timing, Nominal	Timing	Nominal Current Draw (amps)	Nominal Power (watts)	Includes	Used With	Tradeline Value
M436A1116/U	20 lb-in.	2.3 Nm	120 Vac	Opening – 30 sec	Run Time Maximum – 40 sec	Opening – 0.37 A, Holding – 0.12 A	Opening – 28 W, Holding – 8.5 W			Tradeline
M436A1124/U	20 lb-in.	2.3 Nm	240 Vac	Opening – 30 sec	Run Time Maximum – 40 sec	Opening – 0.19 A, Holding – 0.06 A	Opening – 29 W, Holding – 8.5 W	Bracket 198545		Tradeline
M436A1140/U	20 lb-in.	2.3 Nm	220 Vac	Opening – 30 sec, Closing – 25 sec	Run Time Maximum – 55 sec	Opening – 0.21 A, Holding – 0.062 A	Opening – 30 W, Holding – 8.5 W	Ground and cover screw	Series 40, 80 circuits	
M836A1034/U	20 lb-in.	2.3 Nm	24 Vac	Opening – 30 sec, Closing – 25 sec	Run Time Maximum – 55 sec	Opening – 1.85 A, Holding – 0.6 A	Opening – 39 W, Holding – 8.5 W		Series 40, 80 circuits	
M836A1042/U	20 lb-in.	2.3 Nm	24 Vac	Opening – 30 sec	Run Time Maximum – 40 sec	Opening – 1.85 A, Holding – 0.6 A	Opening – 28 W, Holding – 8.5 W			Tradeline
M836B1025/U	15 lb-in.	1.7 Nm	24 Vac	Opening – 30 sec, Closing – 25 sec	Run Time Maximum – 50 sec	Opening – 1.34 A, Holding – 0.73 A	Opening – 20.3 W, Holding – 11.2 W		Series 40, 80 circuits	
M836B1033/U	15 lb-in.	1.7 Nm	24 Vac	Opening – 25 sec	Run Time Maximum – 40 sec	Opening – 1.34 A, Holding – 0.73 A	Opening – 20.3 W, Holding – 11.2 W			Tradeline

M835 Two-Position Zone Damper Actuator

Two-Position Zone Motor, used with two-wire, 24-volt room thermostat or other controller for two position damper control.

- Controls zone or changeover damper in heating and air conditioning systems, and control gates on feeders.
- SPST end switch makes within 20 sec of full open, breaks within 20 sec after start of closing stroke.

Control Signal: Two position, SPST
Frequency: 60 Hz
Fail Safe Mode: Spring Return
Additional Torque Ratings (lb-in.): Breakaway – 30 lb-in.
Additional Torque Ratings (Nm): Breakaway – 3.3 Nm
External Auxiliary Switches Available: No
Stroke: Angle of Rotation – 60 to 75 degrees
Electrical Connections: Lead wire in conduit box

Mounting: Foot-mounted
Motor shafts: 2, Round
Approximate, Dimensions: 5 1/2 in. high x 4 1/4 in. wide x 2 5/8 in. deep (140 mm high x 108 mm wide x 67 mm deep)
Operating Temperature Range: Cooling: 140°F, Heating: 200°F (Cooling: 60°C, Heating: 93°C)
Operating Humidity Range (% RH): 5 to 95% RH
Tradeline Value: Tradeline

Material Number	Torque Rating (lb-in.)	Torque Rating (Nm)	Supply Voltage	Timing, Nominal	Nominal Power (watts)
M835A1051/U	4 lb-in.	0.45 Nm	24 Vac	Opening – 80 sec, Closing – 160 sec	Opening – 27 W, Holding – 8.5 W

M847 Two-Position Draft Damper Actuator

Two-position draft Damper actuators used with two-wire 24V room thermostats or other low voltage controllers to operate the draft damper on solid fuel furnaces or boilers and other similar light duty applications.

- Low voltage, spring-return damper actuator.
- Equipped with mounting bracket for wall, duct or direct appliance mounting to control draft damper through an actuator arm or chain linkage arrangement.
- Actuator wheel rotates in a clockwise direction (when facing the wheel) when energized.

Control Signal: Two position, SPST
Frequency: 60 Hz
Fail Safe Mode: Spring Return
External Auxiliary Switches Available: No
Stroke: Angle of Rotation – 45 degrees maximum

Mounting: Foot mounted. Direct Coupled
Motor shafts: 1, Round
Operating Temperature Range: 40°F to 125°F (5°C to 50°C)
Operating Humidity Range (% RH): 5 to 95% RH

Material Number	Torque Rating (lb-in.)	Torque Rating (Nm)	Supply Voltage	Weight	Approximate, Dimensions	Timing	Includes
M847A1031/B	1.9 lb-in.	0.21 Nm	24 Vac	1.8 lb	3 1/2 in. high x 2 5/8 in. wide x 3 5/16 in. deep (89 mm high x 119 mm wide x 75 mm deep)	Run Time Maximum – 20 sec	38 in. linkage chain
M847A1031/U	1.9 lb-in.	0.21 Nm	24 Vac	1.8 lb	3 1/2 in. high x 2 5/8 in. wide x 3 5/16 in. deep (89 mm high x 119 mm wide x 75 mm deep)	Run Time Maximum – 20 sec	38 in. linkage chain
M847A1049/U	1.9 lb-in.	0.21 Nm	24 Vac	1.75 lbs	3 1/2 in. high x 2 5/8 in. wide x 3 5/16 in. deep (89 mm high x 66 mm wide x 84 mm deep)	Run Time Maximum – 20 sec	3.8 in. linkage arm
M847A1072/B	1.9 lb-in.	0.21 Nm	24 Vac	1.75 lbs	3 1/2 in. high x 2 5/8 in. wide x 3 5/16 in. deep (89 mm high x 66 mm wide x 84 mm deep)	Run Time Maximum – 20 sec	3.8 in. linkage arm
M847A1072/U	1.9 lb-in.	0.21 Nm	24 Vac	1.75 lbs	3 1/2 in. high x 2 5/8 in. wide x 3 5/16 in. deep (89 mm high x 66 mm wide x 84 mm deep)	Run Time Maximum – 20 sec	3.8 in. linkage arm
M847A1080/B	1.9 lb-in.	0.21 Nm	24 Vac	1.8 lb	3 1/2 in. high x 2 5/8 in. wide x 3 5/16 in. deep (89 mm high x 119 mm wide x 75 mm deep)	Run Time Maximum – 20 sec	38 in. linkage chain
M847A1080/U	1.9 lb-in.	0.21 Nm	24 Vac	1.8 lb	3 1/2 in. high x 2 5/8 in. wide x 3 5/16 in. deep (89 mm high x 119 mm wide x 75 mm deep)	Run Time Maximum – 20 sec	38 in. linkage chain
M847A1098/U	1.9 lb-in.	0.21 Nm	24 Vac	1.75 lbs	3 1/2 in. high x 2 5/8 in. wide x 3 5/16 in. deep (89 mm high x 66 mm wide x 84 mm deep)	Run Time Maximum – 20 sec	3.8 in. linkage arm

Replacement Parts and Accessories for Kit Mounted Motors

Material Number	Description	Used With	
126809/0021/U	M836 Mounting Bracket	M836	
126816/0021/U	Clamp for M436	M436	
128336/0021/U	Mounting Bracket for M436/M836, Increases motor height 0.5 inches.	M436, M836	
198545/U	Motor mounting bracket for M436/M836.	M436, M836	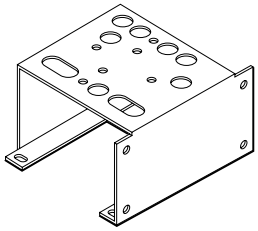
4074BRU/U	Bag Assembly Extension adapter and screws for mounting Q607 Auxiliary switch to M436A Damper Motor.	Q607; M436A	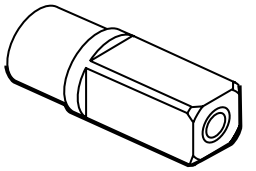
4074ELR/U	Crank arm, heavy duty		
4074ELY/U	Crank arm, infinitely adjustable		

Q100 Linkage

Contains necessary hardware to link Modutrol® motors to a V51B Butterfly Valve.

- Compatible with Modutrol III and Modutrol IV™ motors. (Requires adapter bracket)
- Adaptable for all sizes of V51B Valves.
- Strain release and stop bracket are provided with V51B.

Linkage Type: Valve
Used with Actuator: Modutrol Motor

Material Number	Description
Q100A1015/U	Linkage for 2 1/2 and 3 inch butterfly valves (Can also be used with Modutrol IV motors)
Q100A1023/U	Linkage for 4 inch butterfly valves (Can also be used with Modutrol IV motors)

Q298 Damper Linkage for Economizer Motors

Connects M833, M835, M836, M7215 or M7415 motor to 1 or 2 zone dampers.

- May be used to link shafts of two dampers together.
- Includes pushrod, ball joints and bushings for 1/4 in. (6 mm) to 1/2 in. (13 mm) diameter shafts.

Linkage Type: Damper
Used with Actuator: Damper Actuator (M6415, M7215, M7405, M7415, M8415)

Material Number	Description	Includes
Q298B1065/U	Linkage for adapting 90 degree Modutrol motor to V51E Gas Valve. Includes Pushrod (variable lengths), 2 damper arms, and 2 ball joints.	Pushrod in variable lengths, 2 damper arms, and 2 ball joints

Q605 Damper Linkage

Connect Modutrol® motor to standard damper or set of dampers to provide control of duct airflow.

- Adjustable to any degree of damper opening. Include ball joints, motor crank arm and damper arm for 1/2 in. (13 mm) diameter shaft.
- 27520 pushrod must be ordered separately.

Shaft Dimensions (in.): 1/2 in. (order 26025B/U hub for 3/8 in. dia. or 2174B for 7/16 in. hub dia.)
Used with Actuator: Modutrol Motor

Accessories:
27520B/U – Push Rod (5/16 in. dia., 10 in. length) Used With: All Actuators and Dampers
27520C/U – Push Rod (5/16 in. dia., 12 in. length)
27520E/U – Push Rod (5/16 in. dia., 18 in. length) Used With: All Actuators and Dampers
27520G/U – Push Rod (5/16 in. dia., 24 in. length)
27520K/U – Push Rod (5/16 in. dia., 36 in. length)
27520L/U – Push Rod (5/16 in. dia., 48 in. length)
27520Q/U – Push Rod (5/16 in. dia., 8 in. length) Used With: All Actuators and Dampers
7617ADW/U – Adjustable Modutrol IV Motor Crank Arm
7616BR/U – Modutrol III Motor Crank Arm assembly with clip

Material Number	Linkage Type	Mounting	Includes	Tradeline Value
Q605A1062/U	Damper	Mount motor externally on duct for use with Modutrol III Motors	Motor bracket, damper arm, motor crankarm, and 2 ball joints	
Q605A1070/U	Damper	Mount motor externally on duct for use with Modutrol III Motors	Motor bracket, damper arm, motor crankarm, and 2 ball joints	Tradeline
Q605D1051/U	Damper	Mount motor external on duct or internal in duct for use with Modutrol III Motors	Motor bracket, 3 damper arms, motor crankarm, and 4 ball joints	Tradeline
Q605D1069/U	Damper	Mount motor external on duct or internal in duct for use with Modutrol III Motors	Motor bracket, 3 damper arms, motor crankarm, 4 ball joints, left hand drive ear and crankarm adapter	Super Tradeline
Q605E1050/U	Damper	Mount motor externally on duct without bracket for use with Modutrol III Motors	Damper arm, motor crankarm, and 2 ball joints	Tradeline
Q605F1000/U	Damper	Mount motor externally on duct for use with Modutrol IV Motors	Pushrod in variable lengths, 2 damper arms, and 2 ball joints	
Q605F1018/U	Damper	Mount motor externally on duct for use with Modutrol IV Motors	Motor bracket, damper arm, motor crankarm, and 2 ball joints	Tradeline
Q605G1009/U	Damper	Mount motor inside of duct for use with Modutrol IV Motors	Motor bracket, damper arm, motor crankarm, and 2 ball joints	
Q605H1016/U	Damper	Mount motor externally on duct; Connects one Mod IV motor to two louver dampers	Motor bracket, 3 damper arms, motor crankarm, and 4 ball joints	
Q605H1024/U	Damper	Mount motor external on duct or internal in duct; Connects one Mod IV motor to two louver dampers	Motor bracket, 3 damper arms, motor crankarm, 4 ball joints, left hand drive ear and crankarm adapter	Super Tradeline
Q605J1013/U	Valve	Mount motor externally on duct without bracket for use with Modutrol IV Motors	Damper arm, motor crankarm, and 2 ball joints	Tradeline

Q605 Accessories

Used with Actuator: Modutrol Motor

Material Number	Description	Includes	Used With
101662A/0021/U	Motor Mounting Bracket Assembly for Q605 Damper-Linkage.		Q605
102931/0021/U	Adaptor arm for less that 90 degree rotation for the Q605 Damper-Linkage.		Q605
7617ACL/U	Bag Assembly consists of crank arm assembly, 12 screws, 2 joints, 8 nuts, arm assembly and clip for use with M934.	Damper arm, motor crankarm, and 2 ball joints	Q605

Q5001 Valve Linkage for Modutrol IV™ Motors

The Q5001 Valve Linkage connects a Modutrol® Motor to a 2- or 3-way valve. It is used primarily on V5011 or V5013 steam and water valves.

- Q5001 Valve Linkage is applicable to 2-Way or 3-Way valves in modulating or two-position service.
- Linkage requires no adjustment when used with Honeywell valves and Modutrol IV™ Motors.
- Q5001 Valve Linkage replaces Q601 and Q618 Valve Linkages.
- Linkage mounts directly to the valve bonnet; motor mounts to linkage bracket.
- Easy-to-read position indicator.
- Valve stem lift height cam selectable.
- Overtravel permits tight close-off without excessive motor strain.
- Available brackets make linkages adaptable to many valve bodies.
- Models available with 80 lb, 160 lb, and 320 lb stem force.
- Reversible cams on the Q5001 allow field selection of normally open or normally closed valve operation.
- All models have anti-spin clips.

Linkage Type: Valve
Mounting: Linkage mounts directly to the valve bonnet; motor mounts on linkage bracket.
Used with Actuator: Modutrol Motor
Ambient Temperature Range: -40°F to +150°F (-40°C to +66°C)

Replacement Parts
220845/0767/U – Retainer button for use with Q5001 Valve Linkage for Modutrol IV™ Motors. Unit Pack.

Material Number	Bonnet Size (in.)	Stroke	Stem Force Rating (lbf)	Stem Force Rating (N)	Includes	Used With	Tradeline Value
Q5001A1006/U	1 3/8 in.	3/4 in.	80 lbf	356 N	1 3/8 in. valve bracket	Modutrol IV Motors and V5011 or V5013 valves	
Q5001A1014/U	1 3/8 in.	3/4 in.	160 lbf	712 N	1 3/8 in. valve bracket	Modutrol IV Motors and V5011 or V5013 valves	
Q5001D1000/U	1 3/8 in.	3/4 in.	80 or 160 lbf	356 N or 712 N	1 3/8 in. valve bracket and Anti spin clip	Modutrol IV Motors and V5011 or V5013 valves	Tradeline
Q5001D1018/U	1 3/8 in.	3/4 in.	160 or 320 lbf	712 N or 1355 N	1 3/8 in. valve bracket and Anti spin clip	Modutrol IV Motors and V5011 or V5013 valves up to 3 inch	Tradeline
Q5001D1026/U	1 7/8 in.	1 1/2 in.	160 or 320 lbf	712 N or 1355 N	1 7/8 in. valve bracket and Anti spin clip	Modutrol IV Motors and V5011 or V5013 4, 5 or 6 inch valves	Tradeline

Q5001 Parts

Material Number	Stroke	Description	Used With
220845/0767/U		Retainer button for use with Q5001 Valve Linkage for Modutrol IV™ Motors. Unit Pack.	Q5001
220848A/U	1/2 in.	1/2 inch cam assembly for Q5001 Valve Linkage. Bulk Pack.	Q5001
220852A/U		Stroke Indicator Assembly for Q5001. Bulk Pack.	Q5001
220861A/U	3/4 in.	3/4 inch lift linkage cam assembly for Q5001. Bulk Pack.	Q5001
220863A/U	1 in.	1 inch lift linkage cam assembly for Q5001. Bulk Pack.	Q5001
220864A/U	1 1/8 in.	1-1/8 inch lift linkage cam assembly for Q5001. Bulk Pack.	Q5001
220867A/U	1 1/2 in.	1-1/2 inch lift linkage cam assembly for Q5001. Bulk Pack.	Q5001
220874/0767/U		9/16 inch anti-spin clip for Q5001. Unit Pack.	Q5001
4074ETB/U		Envelope Assembly includes 1-1/16 Anti-spin Clip, 1-1/16 anti-spin Button, 1/4-28 x 24 Set Screw, 8-32 x 1/4 Set Screw, and Instruction Sheet.	Q5001

Q5020 Globe Valve Linkages

The Q5020 Globe Valve Linkages connect a Honeywell direct coupled actuator (DCA) to a steam or water globe valve. The Q5020 Linkages are compatible with two-way and three-way globe valves up to 3 inch (DN80).

- Used with two-way and three-way globe valves in modulating or two-position service.
- Used with 25, 50, and 142 lb-in. spring return and 35, 70, 150, and 300 lb-in. non-spring return DCA.
- Quick and simple installation with no disassembly required.
- Heavy-duty Steel rack and pinion construction and Aluminum Die-cast housing.
- Maintenance-free construction.
- Precision roller-bearing rack construction prevents premature valve packing wear and leakage.
- Flexible actuator mounting orientation.
- Adjustable manual override lever and valve position indicator.
- Can be mounted on specific non-Honeywell valves using a 32004629 Bonnet Adapter Kit.

Linkage Type: Valve
Mounting: Linkage mounts directly to the valve bonnet; actuator mounts on linkage
Used with Actuator: Direct Coupled Actuator

Material Number	Bonnet Size (in.)	Shaft Dimensions (in.)	Stroke	Includes	Used With
Q5020A1003/U	1 3/8 in.	1/2 in.	3/4 in.	1/2 in. diameter drive shaft	V5011N; V5013N; V5011F; V5011G
Q5020C1009/U	1 3/8 in.	1 in.	1 1/2 in.	1 in. diameter drive shaft	V5051
Q5020D1007/U	1 3/8 in.	1/2 in.	1/2 in.	1/2 in. diameter drive shaft	T.A.C. valves; Siemens valves; Johnson valves

Q5024 Globe Valve Linkage

Q5024 Globe Valve Linkages connect a Honeywell direct coupled actuator (DCA) to a steam or water globe valve. Q5024 linkages are compatible with 2- and 3-way globe valves.

- Used with 2-way and 3-way globe valves in modulating or two-position service.
- Quick and simple installation with no disassembly required.
- Heavy-duty steel rack and pinion construction and aluminum die-cast housing.
- Maintenance-free construction.
- Flexible actuator mounting orientation.
- Adjustable manual override lever and valve position indicator.
- Available for 1/2 in. through 6 in. globe valves made by most manufacturers.
- Used with Honeywell MS and MN Spring and Non-Spring Actuators.

Linkage Type: Valve
Mounting: Linkage mounts directly to the valve bonnet; actuator(s) mount on linkage
Used with Actuator: Direct Coupled Actuator
Ambient Temperature Range: -40°F to 140°F (-40°C to 60°C)

Material Number	Shaft Dimensions (in.)	Stroke	Description	Comments	Used With
Q5024A1116/U	0.63 in. (16 mm)	0.63”/16 mm	Linkage for 0.63”/16 mm valve stroke	Materials: Cold Rolled Steel Housing; Steel Rack and Pinion Gears; Brass Bushing and Clip	2-way and 3-way globe valves in modulating or two-position service
Q5024A1123/U	0.63 in. (16 mm)	0.91”/23 mm	Linkage for 0.91”/23 mm valve stroke	Materials: Cold Rolled Steel Housing; Steel Rack and Pinion Gears; Brass Bushing and Clip	2-way and 3-way globe valves in modulating or two-position service
Q5024A1130/U	0.75 in. (19 mm)	1.18”/30 mm	Linkage for 1.18”/30 mm valve stroke	Materials: Cold Rolled Steel Housing; Steel Rack and Pinion Gears; Brass Bushing and Clip	2-way and 3-way globe valves in modulating or two-position service
Q5024B2230/U	0.75 in. (19 mm)	1.18”/30 mm	Double linkage for 1.18”/30 mm valve stroke	Materials: Cold Rolled Steel Housing; Steel Rack and Pinion Gears; Brass Bushing and Clip	2-way and 3-way globe valves in modulating or two-position service
Q5024B2240/U	0.75 in. (19 mm)	1.57”/40 mm	Double linkage for 1.57”/40 mm valve stroke	Materials: Cold Rolled Steel Housing; Steel Rack and Pinion Gears; Brass Bushing and Clip	2-way and 3-way globe valves in modulating or two-position service

Dimensions in inches (millimeters)

Q5024A1116/Q5024A1123

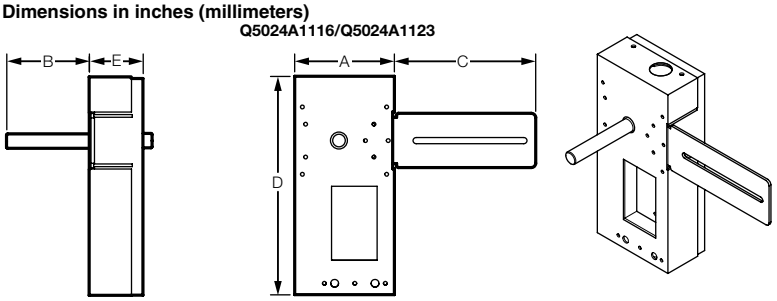

Q5024A1130

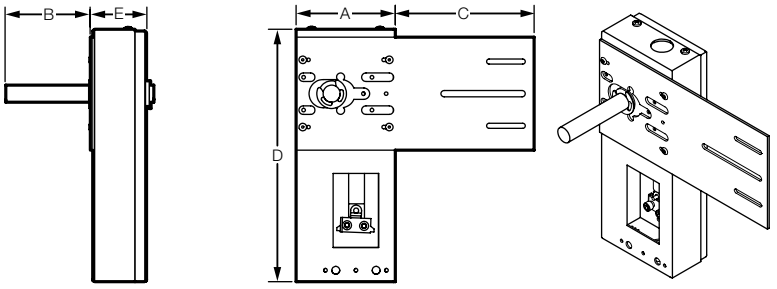

Q5024B2230/Q5024B2240

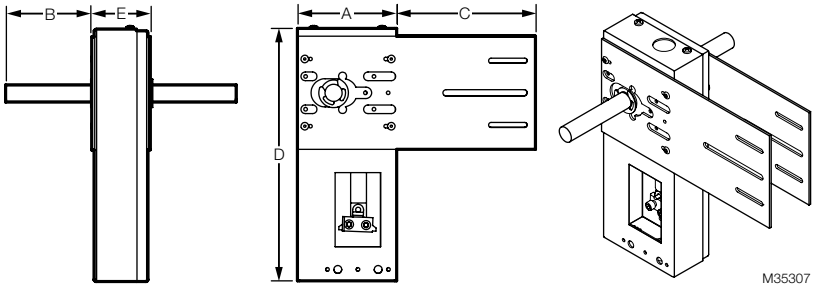

Typical installation of direct coupled actuators

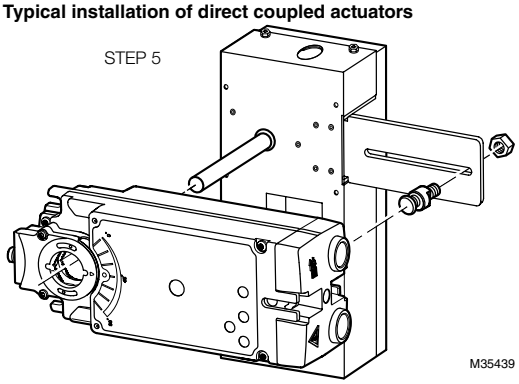

Q5024 Globe Valve Linkage Accessories

Material Number	Description	Used With
BU5024-001/U	Globe valve bonnet adapter 1-1/4" diameter-16 TPI with 1/4"-28 TPI stem adapter	Siebe, Barber Colman, Invensys Globe Valves
BU5024-002/U	Globe valve bonnet adapter 1" diameter-16 TPI with 1/4"-24 TPI stem adapter	Siebe, Barber Colman, Invensys Globe Valves
BU5024-003/U	Globe valve bonnet adapter 1-1/4" diameter-16 TPI with 1/2"-20 TPI stem adapter	Siebe, Barber Colman, Invensys Globe Valves
BU5024-FLGKIT/U	BU3, WA1 and 3/8-24 and 1/2-20 TPI stem adapters	Siebe, Barber Colman, Invensys Globe Valves
BU5024-NPTKIT/U	BU1, BU2 and 1/4-28 stem adapters	Siebe, Barber Colman, Invensys Globe Valves
GU5024-001/U	Globe valve bonnet adapter 1-5/16" diameter-with 1/4"-28 TPI stem adapter	Siemens, Landis Powers Globe Valves
GU5024-002/U	Globe valve bonnet adapter 1-3/32" diameter-14 TPI with 1/4"-28 and 3/8"-24 TPI stem adapters	Siemens, Landis Powers Globe Valves
GU5024-003/U	Globe valve bonnet adapter 1-3/8" diameter-20 TPI with 3/8"-24 and 1/4"-28 TPI stem adapters	Siemens, Landis Powers Globe Valves
GU5024-KIT/U	GU1, GU2, GU3 and 1/4-28, 3/8-24 stem adapters	Siemens, Landis Powers Globe Valves
HU5024-001/U	Globe valve bonnet adapter 1-3/8" diameter- with 1/4"-28 TPI stem adapter	Honeywell Globe Valves
HU5024-002/U	Globe valve bonnet adapter 1-7/8" diameter- with 7/16"-20 TPI stem adapter	Honeywell Globe Valves
JU5024-001/U	Globe valve bonnet adapter 2 0mm diameter-1.5 mm TPI with 1/4"-28 TPI stem adapter	Johnson Controls Globe Valves
JU5024-002/U	Globe valve bonnet adapter 1-1/16" diameter-16 TPI with 3/8"-28 TPI stem adapter	Johnson Controls Globe Valves
JU5024-003/U	Globe valve bonnet adapter 28 mm diameter-1.5 mm TPI with 1/4"-28 TPI stem adapter	Johnson Controls Globe Valves
JU5024-004/U	Globe valve bonnet adapter 3/4" diameter-16 TPI with 3/8"-24 TPI stem adapter	Johnson Controls Globe Valves
JU5024-005/U	Globe valve bonnet adapter 3/4" diameter-18 TPI with 1/4"-28 TPI stem adapter	Johnson Controls Globe Valves
JU5024-006/U	Globe valve bonnet adapter 1.59" diameter-14 TPI with 1/2"-20 TPI and 3/8"-24 TPI stem adapters	Johnson Controls Globe Valves
JU5024-FLGKIT/U	JU2, JU4 and 3/8-24, 1/2-20 stem adapters	Johnson Controls Globe Valves
JU5024-NPTKIT/U	JU1, JU3, JU5 and 1/4-28 stem adapter	Johnson Controls Globe Valves
WU5024-001/U	Globe valve bonnet adapter 1-3/8" diameter-18 TPI with 3/8"-24 TPI stem adapter	Siebe, Barber Colman, Invensys Globe Valves

Damper and Valve Linkage Accessories

Linkage Type: Damper

Material Number	Description	Used With
102546/U	Ball joint assembly for damper applications. Use with 5/16 inch diameter push rod. Bulk Pack	Damper Linkages
104643A/U	Adaptor assembly for driving 2 dampers from 1 crank arm. Includes Adaptor, 1/4 Lockwasher, 1/4-20 Hex Nut, and 1/4-20 x 1/2 RHIS.	Modutrol IV Motors; Kit Mounted Motors
26025F/U	Crank Arm Assembly with 3/8 inch shaft.	
26026B/U	Crank Arm Assembly with 1/2 inch shaft, 3 inch long. Bulk Pack.	
32004629-001/U	Bonnet Adapter Kit to adapt Siemens valves (Landis/Power) Flowrite 599 1/2 inch to 3 inch globe valves with Q5020A or Q5009B.	Siemens valves
32004629-002/U	Bonnet Adapter Kit to adapt Johnson VG7000 1/2 inch to 3/4 inch globe valves with Q5020D.	Q5020; Johnson valves
32004629-003/U	Bonnet adapter kit to adapt Johnson VG7000 1 inch to 2 inch globe valves with Q5020A, Q5020B or Q5020D.	Q5020; Johnson valves
32004629-004/U	Bonnet adapter kit to adapt Siebe VB7000 1/2 inch to 2 inch globe valves with Q5020D.	Q5020; Siebe valves

C7232 Carbon Dioxide (CO_2) Sensors

These stand-alone Carbon Dioxide (CO_2) Sensors and Controllers are used for determining ventilation necessity with HVAC controllers and to manage the amount of fresh outdoor air supplied to maintain acceptable levels of CO_2 in the space.

- Models available with LCD that provides sensor readings and status information.
- Non-Dispersion-Infrared (NDIR) technology used to measure carbon dioxide gas.
- Sensor provides long-term calibration stability.
- C7232 provides voltage or current output based on CO_2 levels.
- SPST relay output.
- Used for CO_2 based ventilation control (Demand Control Ventilation (DCV)).
- Automatic Background Calibration (ABC) algorithm based on long-term evaluation reduces required typical zero-drift check maintenance.

Application: Carbon Dioxide Sensor
Sensor: Non-dispersive Infrared (NDIR)
Sensor Range: 0 to 2000 ppm, adjustable
Operating Temperature Range: 32°F to 122°F (0°C to 50°C)
Accuracy: 5% full scale
Voltage: 24 Vac/dc ±20%

Analog Current Output: 0/2 - 10 Vdc or 0/4 - 20 mA selectable
Contact Ratings: 1 A @ 50 Vac/24 Vdc
Frequency: 50 Hz; 60 Hz
Timing: Response –1 minute
Relay Outputs: One: Normally Open SPST

Material Number	Display	Mounting	Approximate, Dimensions	Electrical Connections	Includes
C7232A1008/U	Yes	Wall mount	5 1/16 in. high x 3 5/32 in. wide x 2 in. deep (128 mm high x 80 mm wide x 25 mm deep)	Six leadwires, 20-gauge, 8 in. long	Honeywell Logo
C7232A1016/U	None	Wall mount	5 1/16 in. high x 3 5/32 in. wide x 2 in. deep (128 mm high x 80 mm wide x 25 mm deep)	Six leadwires, 20-gauge, 8 in. long	Honeywell Logo
C7232A1024/U	Yes	Wall mount	5 1/16 in. high x 3 5/32 in. wide x 2 in. deep (128 mm high x 80 mm wide x 25 mm deep)	Six leadwires, 20-gauge, 8 in. long	No Honeywell Logo
C7232A1032/U	None	Wall mount	5 1/16 in. high x 3 5/32 in. wide x 2 in. deep (128 mm high x 80 mm wide x 25 mm deep)	Six leadwires, 20-gauge, 8 in. long	No Honeywell Logo
C7232B1006/U	Yes	Duct mount	5 5/8 in. high x 3 5/16 in. wide x 3 7/16 in. deep x plus 8 in. long sensing tube (142 mm high x 84 mm wide x 87 mm deep x plus 203 mm sensing tube)	Six leadwires, 20-gauge, 6 in. long	Honeywell Logo
C7232B1014/U	None	Duct mount	5 5/8 in. high x 3 5/16 in. wide x 3 7/16 in. deep x plus 8 in. long sensing tube (142 mm high x 84 mm wide x 87 mm deep x plus 203 mm sensing tube)	Six leadwires, 20-gauge, 6 in. long	Honeywell Logo
C7232B1022/U	Yes	Duct mount	5 5/8 in. high x 3 5/16 in. wide x 3 7/16 in. deep x plus 8 in. long sensing tube (142 mm high x 84 mm wide x 87 mm deep x plus 203 mm sensing tube)	Six leadwires, 20-gauge, 6 in. long	No Honeywell Logo
C7232B1030/U	None	Duct mount	5 5/8 in. high x 3 5/16 in. wide x 3 7/16 in. deep x plus 8 in. long sensing tube (142 mm high x 84 mm wide x 87 mm deep x plus 203 mm sensing tube)	Six leadwires, 20-gauge, 6 in. long	No Honeywell Logo

Carbon Dioxide (CO_2) Sensors

C7262 Carbon Dioxide (CO_2)/Temperature Sensors

Carbon Dioxide (CO_2)/Temperature Sensors

- Used for CO_2 based ventilation control.
- Integral 20K ohm NTC temperature output.
- Models available with LCD that provides CO_2 ppm level.
- Non-Dispersion-Infrared (NDIR) technology used to measure carbon dioxide gas.
- Device provides voltage or current output based on CO_2 levels.
- Models available with SPST relay output.
- Automatic Background Calibration (ABC) algorithm based on long-term evaluation reduces required typical zero-drift check maintenance.

Application: Carbon Dioxide Sensor
Sensor: Non-dispersive Infrared (NDIR)
Sensor Range: 0 to 2000 ppm, adjustable
Operating Temperature Range: 32°F to 122°F
Temperature Sensor Range: 50°F to 100°F (0°C to 50°C)
Accuracy: ±30 ppm + 3% of reading
Voltage: 24 Vac/dc ±20%

Analog Current Output: 0/2 - 10 Vdc or 0/4 - 20 mA selectable
Contact Ratings: 1 A @ 50 Vac/24 Vdc
Frequency: 50 Hz; 60 Hz
Timing: Response – 1 minute
Relay Outputs: One: Normally Open SPST

Material Number	Display	Mounting	Approximate, Dimensions	Includes
C7262A1008/U	Yes	Wall mount	4 9/16 in. high x 3 in. wide x 7/8 in. deep (116 mm high x 76 mm wide x 22 mm deep)	Honeywell Logo
C7262A1016/U	None	Wall mount	4 9/16 in. high x 3 in. wide x 7/8 in. deep (116 mm high x 76 mm wide x 22 mm deep)	Honeywell Logo

C7632 Carbon Dioxide (CO_2) Sensors

CO_2 Sensors offer a fixed 0-2000 ppm and fixed 0-10 Vdc output, determine ventilation need with HVAC controllers and measure CO_2 concentration in ventilated spaces or ducts. Used in ventilation and AC systems to control the amount of outdoor air supplied.

- Non-Dispersion-Infrared (NDIR) technology used to measure carbon dioxide gas.
- Sensor provides long-term calibration stability.
- Fixed 0-2000 ppm, fixed 0-10 Vdc output.
- Used for CO_2 based ventilation control (Demand Control Ventilation (DCV)).
- Automatic Background Calibration (ABC) algorithm based on long-term evaluation reduces required typical zero-drift check maintenance.

Application: Carbon Dioxide Sensor
Sensor: Non-dispersive Infrared (NDIR)
Sensor Range: 0 to 2000 ppm, fixed
Operating Temperature Range: 32°F to 122°F (0°C to 50°C)
Accuracy: 5% full scale

Voltage: 24 Vac (±20%)
Analog Current Output: 0-10 Vdc fixed
Frequency: 50 Hz; 60 Hz
Timing: Response – 1 minute
Relay Outputs: None

Material Number	Display	Mounting	Electrical Connections	Approximate, Dimensions	Includes
C7632A1004/U	None	Wall mount	Terminal block	4 1/8 in. high x 3 7/8 in. wide x 1 1/16 in. deep (104 mm high x 99 mm high x 27 mm deep)	Honeywell Logo
C7632B1002/U	None	Duct mount	20-gauge cable with three 6 in. leadwires	5 5/8 in. high x 3 5/16 in. wide x 3 7/16 in. deep x plus 8 in. long sensing tube (142 mm high x 84 mm wide x 87 mm deep x plus 203 mm sensing tube)	Honeywell Logo

Early-Warning Dew-Point Switch

Dew-point sensor.

- Does not wait to detect when the dew-point has already been reached, but rather provides an early warning of the approaching dew-point
- Compact design
- Fast response
- Module is coated, thus protected against contamination
- Simple and easy mounting
- Status indication

Application: For use in monitoring the formation of condensation on chilled ceilings or to prevent condensation at critical spots of HVAC systems
Mounting: Flat and round surfaces
Operating Humidity Range (% RH): 10 to 100% RH

Power Consumption: < 10mA(AC) < 3 mA(DC)
Timing: Response – ~3 min (given a jump in the relative humidity of from 55% to 100%)
Comments: R.H. Hysteresis Switching – 5% RH

Material Number	ON Voltage	Voltage	Switch Points	Switching Current	Output
HSS-DPS	max. 24 Vac/dc	60 Vdc; Supply 24 Vac/Vdc ± 20%	Contact Closed @ <90% RH; Contact Open @ >90% RH	max. 1A	Potential-Free relay with changeover contact

H7625; H7635; H7636; H7655; and H7656 Humidity and Temperature Transmitters

The H7625, H7635, and H7655 are highly accurate, stable humidity transducers designed for use with HVAC controllers such as the T7350 Thermostat, T775U Remote Humidity Controller, and W7760 Direct Digital Controllers.

- Ceramic Technology overcomes the limitations of other resistance based humidity sensors that use water soluble polymer coatings.
- Ceramic Technology allows sensors to recover fully from condensation, fog, and high humidity.
- Highly accurate, repeatable, stable output with negligible hysteresis.
- Temperature compensated output.
- Zero and span trimmers, and increment/decrement recalibration feature.
- All units (except H7655A1001) have selectable 4-20 mA, 0-10 Vdc, or 0-5 Vdc output.
- NIST traceable 2%, 3%, and 5% calibration, every sensor calibrated at 3 different points.
- All humidity sensors use the same enclosure as the TR20 sensor, except the H7655A, which uses the T7047-like enclosure.

Operating Humidity Range (% RH): 0 to 95% RH non-condensing
Sensor Range: 0 to 100% RH
Shipping and Storage Temperature Range: -40°F to +160°F (-40°C to 66°C)

Material Number	Application	Sensor	Voltage	Mounting	Output	Operating Temperature Range	Accuracy	Comments	Used With
H7625A2010/U	Wall mounted Humidity and Temperature Sensor	20K ohm NTC	18 – 40 VDC / 18 – 28 VAC	Wall mount	Humidity – 4-20 mA, 0-5 Vdc, or 0-10 Vdc selectable; Temperature – 20K ohm NTC	32°F to 122°F (0°C to 50°C)	±2% from 20-95% RH		Excel 15, Excel 10, T7350
H7625B2006/U	Duct mounted Humidity and Temperature Sensor	20K ohm NTC	18 – 40 VDC / 18 – 28 VAC	Duct mount	Humidity – 4-20 mA, 0-5 Vdc, or 0-10 Vdc selectable; Temperature – 20K ohm NTC	-10°F to 140°F (23°C to 60°C)	±2% from 20-95% RH		Excel 15, Excel 10, T7350
H7626B2024/U	Duct mounted Humidity and Temperature Sensor	1097 ohm PTC	18 – 40 VDC / 18 – 28 VAC	Duct mount	Humidity – 4-2 0 mA, 0-5 Vdc, or 0-10 Vdc selectable; Temperature – 1097 ohm at 77°F	-10°F to 140°F (23°C to 60°C)	±2% from 20-95% RH		Excel 15, Excel 10, T775 Series 2000
H7635A2012/U	Wall mounted Humidity and Temperature Sensor	20K ohm NTC	18 – 40 VDC / 18 – 28 VAC	Wall mount	Humidity – 4-20 mA, 0-5 Vdc, or 0-10 Vdc selectable; Temperature – 20K ohm NTC	32°F to 122°F (0°C to 50°C)	±3% from 20-95% RH		Excel 15, Excel 10, T7350
H7635B2018/U	Duct mounted Humidity and Temperature Sensor	20K ohm NTC	18 – 40 VDC / 18 – 28 VAC	Duct mount	Humidity – 4-20 mA, 0-5 Vdc, or 0-10 Vdc selectable; Temperature – 20K ohm NTC	-10°F to 140°F (23°C to 60°C)	±3% from 20-95% RH		Excel 15, Excel 10, T7350
H7635C2015/U	Outdoor mounted Humidity and Temperature Sensor	20K ohm NTC	18 – 40 VDC / 18 – 28 VAC	Outdoor mount	Humidity – 4-20 mA, 0-5 Vdc, or 0-10 Vdc selectable; Temperature – 20K ohm NTC	-10°F to 140°F (23°C to 60°C)	±3% from 20-95% RH		Excel 15, Excel 10, T7350
H7636A2022/U	Wall mounted Humidity and Temperature Sensor	1097 ohm PTC	18 – 40 VDC / 18 – 28 VAC	Wall mount	Humidity – 4-20 mA, 0-5 Vdc, or 0-10 Vdc selectable; Temperature – 1097 ohm at 77°F	32°F to 122°F (0°C to 50°C)	±3% from 20-95% RH		Excel 15, Excel 10, T775 Series 2000
H7636B2026/U	Duct mounted Humidity and Temperature Sensor	1097 ohm PTC	18 – 40 VDC / 18 – 28 VAC	Duct mount	Humidity – 4-20 mA, 0-5 Vdc, or 0-10 Vdc selectable; Temperature – 1097 ohm at 77°F	-10°F to 140°F (23°C to 60°C)	±3% from 20-95% RH		Excel 15, Excel 10, T775 Series 2000
H7655A1001/U	Wall mounted Humidity Sensor	solid state	16 – 40 VDC / 16 – 30 VAC	Wall mount	Humidity – 0-10 Vdc	32°F to 125°F (0°C to 50°C)	±5% from 30-70% RH	Polymer capacitance humidity sensor; Uses different enclosure (same as T7047 Sensor).	XL15, XL10, T7350

Material Number	Application	Sensor	Voltage	Mounting	Output	Operating Temperature Range	Accuracy	Comments	Used With
H7655B2014/U	Duct mounted Humidity and Temperature Sensor	20K ohm NTC	18 – 40 VDC / 18 – 28 VAC	Duct mount	Humidity – 4-20 mA, 0-5 Vdc, or 0-10 Vdc selectable; Temperature – 20K ohm NTC	-10°F to 140°F (23°C to 60°C)	±5% from 25-95% RH		Excel 15, Excel 10, T7350
H7656B2029/U	Duct mounted Humidity and Temperature Sensor	1097 ohm PTC	18 – 40 VDC / 18 – 28 VAC	Wall mount	Humidity – 4-20 mA, 0-5 Vdc, or 0-10 Vdc selectable; Temperature – 1097 ohm at 77°F	-10°F to 140°F (23°C to 60°C)	±5% from 25-95% RH		Excel 15, Excel 10, T775 Series 2000

Dimensions in inches (millimeters)

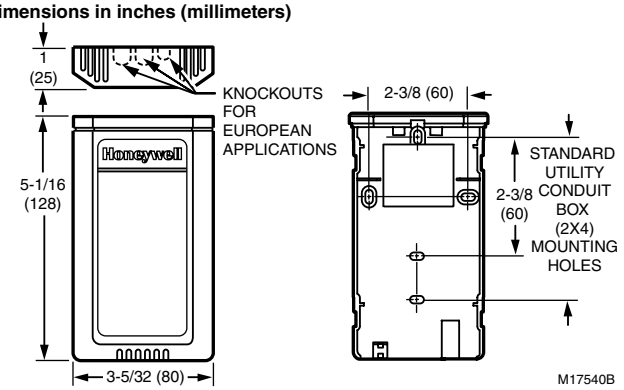

Dimensions in inches (millimeters)

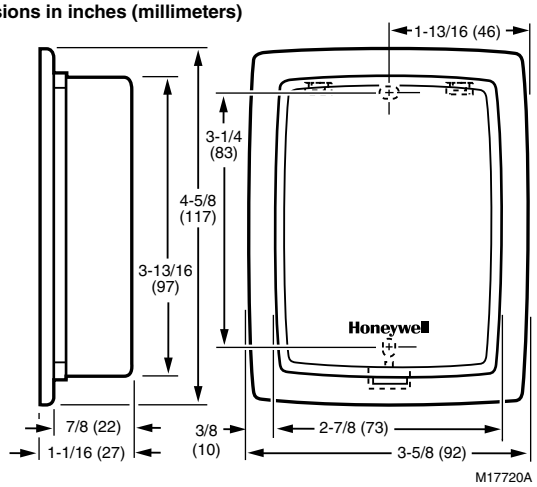

Dimensions in inches (millimeters)

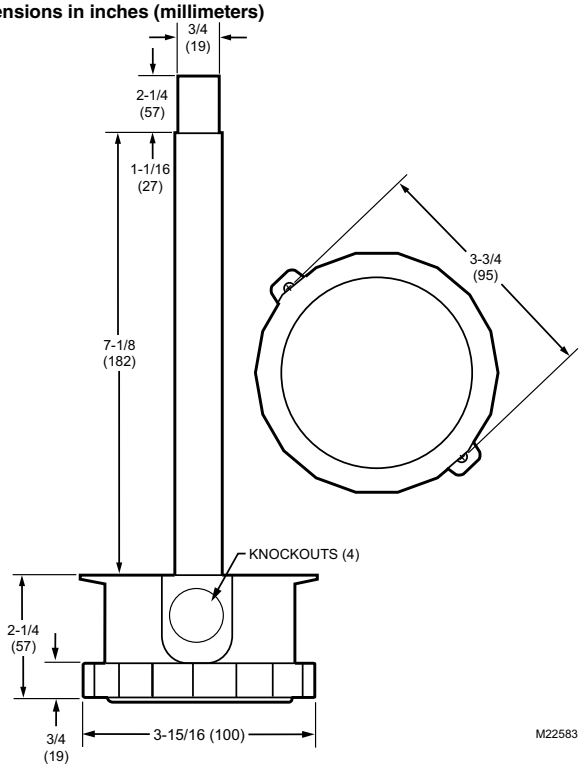

Dimensions in inches (millimeters)

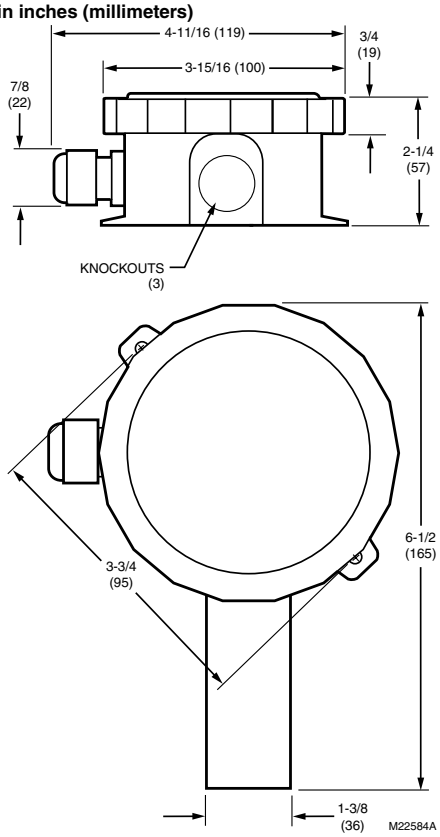

P7640 Differential Pressure Transmitters

Duct Mount (Display)

Duct Mount (Integral probe)

Universal Mount

Dimensions in inches (millimeters)

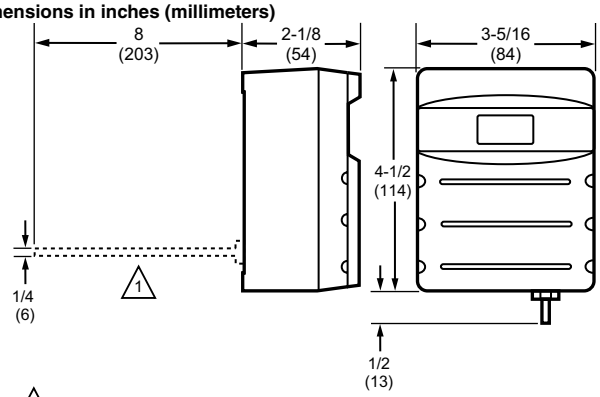

1 P7640B ONLY. THE P7640A HAS NO PROBE.

M22581

P7640 Pressure Sensors are designed with field-selectable 4-20 mA, 0-5 Vdc, or 0-10 Vdc output. They switch selectable pressure ranges between 0-1 in. w.c./0-250 Pa or 0-10 in. w.c./ 0-2500 Pa depending on the model.

- The P7640A Panel Mount, P7640B Duct Mount and P7640U Universal Mount Differential Pressure Transmitters provide reliable, accurate measurement and control.
- Proper applications include measurement of extremely low pressure applications such as: building/room pressure, airflow, variable air volume, filter status, and duct pressure.
- They are ideal for clean rooms, hospitals, fume hoods, and computer rooms.
- Selectable inches w.c. or Pascal scale.
- Selectable fast or standard response time.
- Duct mount model comes with factory installed duct probe.
- The Universal model comes with attachable duct probe and can be used in either panel or duct mounting application.

Operating Temperature Range: 32°F to 140°F (0°C to 60°C)
Approximate, Dimensions: 4.5 in. high, 3.313 in. wide, 2.125 in. deep (114 mm high, 84 mm wide, 54 mm deep)
Accuracy: ±1% Full Scale
Proof pressure: 3 psi
Burst pressure: 5 psi
Connection Size (in.): Pneumatic: 1/4 in. Brass Hose Barb, Electrical: Unpluggable screw terminal block
Output: 4-20 mA, 0-5 Vdc or 0-10 Vdc selectable
Voltage: 12 to 30 Vdc or 24 Vac
Comments: With auto zero calibration by push button or external contact closure

Material Number	Pressure Range (in. w.c.)	Pressure Range (Pa)	Mounting	Display
P7640A1000/U	0-1.0, 0-0.5, 0-0.25, or 0-0.1 inches w.c., uni- or bi-directional	0-25, 0-50, 0-100, 0-250 Pa uni- or bi-directional	Panel mount	Yes
P7640A1018/U	0-1.0, 0-0.5, 0-0.25, or 0-0.1 inches w.c., uni- or bi-directional	0-25, 0-50, 0-100, 0-250 Pa uni- or bi-directional	Panel mount	None
P7640A1026/U	0-10, 0-5, 0-2.5, or 0-1 inches w.c., uni- or bi-directional	0-250, 0-500, 0-1000, 0-2500 Pa uni- or bi-directional	Panel mount	Yes
P7640A1034/U	0-10, 0-5, 0-2.5, or 0-1 inches w.c., uni- or bi-directional	0-250, 0-500, 0-1000, 0-2500 Pa uni- or bi-directional	Panel mount	None
P7640B1008/U	0-1.0, 0-0.5, 0-0.25, or 0-0.1 inches w.c., uni- or bi-directional	0-25, 0-50, 0-100, 0-250 Pa uni- or bi-directional	Duct mount, integral 8 in. probe	Yes
P7640B1016/U	0-1.0, 0-0.5, 0-0.25, or 0-0.1 inches w.c., uni- or bi-directional	0-25, 0-50, 0-100, 0-250 Pa uni- or bi-directional	Duct mount, integral 8 in. probe	None
P7640B1024/U	0-10, 0-5, 0-2.5, or 0-1 inches w.c., uni- or bi-directional	0-250, 0-500, 0-1000, 0-2500 Pa uni- or bi-directional	Duct mount, integral 8 in. probe	Yes
P7640B1032/U	0-10, 0-5, 0-2.5, or 0-1 inches w.c., uni- or bi-directional	0-250, 0-500, 0-1000, 0-2500 Pa uni- or bi-directional	Duct mount, integral 8 in. probe	None
P7640U1040/U	0-0.1, 0-0.25, 0-0.5, 0-1, 0-2.5, 0-5, or 0-10 inches w.c., uni- or bi-directional	0-25, 0-50, 0-100, 0-250, 0-500, 0-1000, 0-2500 Pa uni- or bi-directional	Universal	None
P7640U1052/U	0-0.1, 0-0.25, 0-0.5, 0-1, 0-2.5, 0-5, or 0-10 inches w.c., uni- or bi-directional	0-25, 0-50, 0-100, 0-250, 0-500, 0-1000, 0-2500 Pa uni- or bi-directional	Universal	Yes

PWT Series Wet/Wet Differential Pressure Sensors

The PWT Series wet/wet differential pressure sensors provide reliable, accurate measurement and control of many applications, including pump differential pressure, chiller/boiler differential pressure drop, and CW/HW system differential pressure.

- The PWT Pressure Sensors incorporate microprocessor profiled sensors for exceptional accuracy and reliability.
- Field-selectable 4-20 mA, 0-5 Vdc, or 0-10 Vdc output.
- Jumper-selectable slow or fast response time.
- Switch-selectable pressure ranges.
- The jumper-selectable output switch for normal (4-20 mA) or reverse (20-4 mA) operation provides application flexibility.
- Rugged, die-cast enclosure provides NEMA 4 sealing.
- Jumper-selectable port swap feature.
- All models offer both push button and digital input to zero the output.

Operating Humidity Range (% RH): 10 to 90% RH, non-condensing
Operating Temperature Range: 14°F to 131°F (-10°C to 55°C)
Approximate, Dimensions: 4 in. high x 5 51/64 in. wide x 2 13/64 in. deep (102 mm high x 147 mm wide x 57 mm deep)
Proof pressure: 2x max. F.S. range
Burst pressure: 5x max. F.S. range
Connection Size (in.): 1/8 in. NPT female, stainless steel 17-4 PH

Output: 4-20 mA, 0-5 Vdc or 0-10 Vdc selectable
Voltage: 12 to 30 Vdc or 24 Vac
Approvals, CE: CE

Accessories
PWT-BV/U – Bypass Valve Manifold for PWT Wet differential pressure sensors

Material Number	Accuracy	Pressure Range (psi)	Display	Mounting	Description
PWT50/U	±1% F.S. for 0-10, 0-25, 0-50 psid; ±2% F.S. for 0-5 psid	0-5, 0-10, 0-25, 0-50 psid	Yes	Horizontal Mount	Wet Differential Pressure Transmitter
PWT100/U	±1% F.S. for 0-100, 0-50, 0-20 psid; ±2% F.S. for 0-10 psid	0-100, 0-50, 0-20, 0-10 psid	Yes	Horizontal Mount	Wet Differential Pressure Transmitter
PWT250/U	±1% F.S. for 0-250, 0-125, & 0-50 psid; ±2% F.S. for 0-25 psid	0-25, 0-50, 0-125, 0-250 psid	Yes	Horizontal Mount	Wet Differential Pressure Transmitter

Gauge Pressure Sensors

The MLH Series is a two-wire 4-20 mA gauge pressure sensor. This digitally compensated sensor offers an unparalleled value/performance combination, making it an ideal solution for demanding applications. Available in pressure ranges up to 1000 psi.

- Available in 50, 150, 300, 500 and 1000 psi.
- All metal wetted parts for use in wide variety of fluid applications.
- Suitable for use with freon and ammonia based cooling systems.
- No internal elastomeric seals mean no o-ring compatibility issues.
- Less than 2 ms response time provides accurate, high speed measurement.
- Select models available with 1/4-in. SAE female Schrader connection with valve depressor.

Operating Temperature Range: -40°F to +257°F (-40°C to 125°C)
Burst pressure: 10X Working Pressure Range
Materials: Housing – Black plastic, A model AS-4133 HS-PPA; In contact with media – SST 304L and Haynes 214 alloy

Voltage: 9.5 Vdc to 30 Vdc
Approvals, CE: CE

Material Number	Accuracy	Pressure Range (psi)	Proof Pressure	Output	Connection Size (in.)	Electrical Connections
MLH050PSCDJ1235	±0.50% of full scale span	50 psig	3X Working Pressure Range	4-20 mA, 2-wire	1/4"-18 NPT	Cable (3 meter)
MLH150PSCDJ1236	±0.25% of full scale span	150 psig	3X Working Pressure Range	4-20 mA, 2-wire	1/4"-18 NPT	Cable (3 meter)
MLH300PSCDJ1237	±0.25% of full scale span	300 psig	3X Working Pressure Range	4-20 mA, 2-wire	1/4"-18 NPT	Cable (3 meter)
MLH500PSCDJ1240	±0.25% of full scale span	500 psig	3X Working Pressure Range	4-20 mA, 2-wire	1/4" SAE female Schrader	Cable (3 meter)
MLH01KPSCDJ1241	±0.25% of full scale span	1000 psig	2X Working Pressure Range	4-20 mA, 2-wire	1/4" SAE female Schrader	Cable (3 meter)

C7021 10K ohm NTC Type II Temperature Sensors

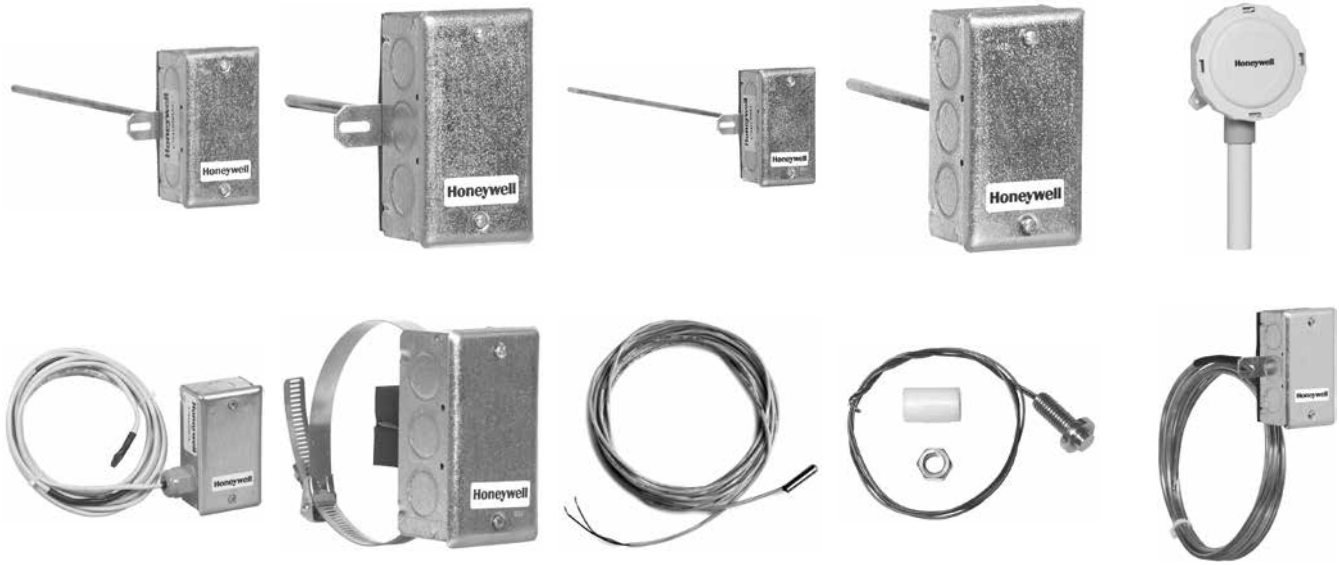

10K ohm NTC Temperature Sensor

- Solid state thermistor element provides accurate sensing of temperature changes.

Sensor: 10 K ohm NTC @ 77°F Type II
Shipping and Storage Temperature Range: -30°F to +160°F (-34°C to +71°C)
Used With: TB7600, TB7300, TB7200 Series communicating thermostats

Material Number	Application	Operating Temperature Range	Insertion Length	Ambient Temperature Range
C7021B2005/U	Duct	-40°F to +250°F (-40°C to +121°C)	6 in. (152 mm)	250°F Maximum (121°C Maximum)
C7021B2013/U	Duct	-40°F to +250°F (-40°C to +121°C)	12 in. (305 mm)	250°F Maximum (121°C Maximum)
C7021C2003/U	Duct	-40°F to +250°F (-40°C to +121°C)	18 in. (457 mm)	250°F Maximum (121°C Maximum)
C7021D2001/U	Immersion sensor for hot or chilled water, purchase well 50001774-001 separately	-40°F to +250°F (-40°C to +121°C)	5 in. (127 mm)	250°F Maximum (121°C Maximum)
C7021F2009/U	Outside air temperature	-40°F to +158°F (-40°C to +70°C)		250°F Maximum (121°C Maximum)
C7021J2007/U	Duct air (averaging)	-40°F to +250°F (-40°C to +121°C)	12 ft. (3.66 m)	250°F Maximum (121°C Maximum)
C7021K2005/U	Hot or chilled water (strap on)	-40°F to +250°F (-40°C to +121°C)		250°F Maximum (121°C Maximum)
C7021N2001/U	Water or air temperature sensor (probe sensor)	-40°F to +250°F (-40°C to +121°C)		250°F Maximum (121°C Maximum)
C7021P2004/U	Temperature Sensor	-40°F to +250°F (-40°C to +121°C)		250°F Maximum (121°C Maximum)
C7021R2000/U	Duct air (averaging)	-40°F to +250°F (-40°C to +121°C)	12 ft. (3.66 m)	250°F Maximum (121°C Maximum)
C7021R2018/U	Duct air (averaging)	-40°F to +250°F (-40°C to +121°C)	24 ft. (7.3 m)	250°F Maximum (121°C Maximum)

Dimensions in inches (millimeters)

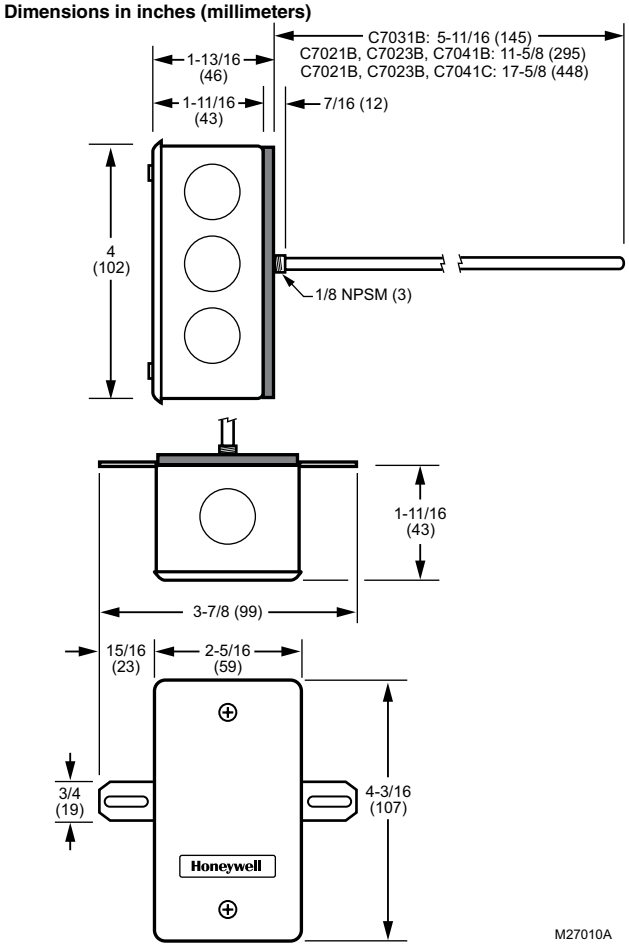

Dimensions in inches (millimeters)

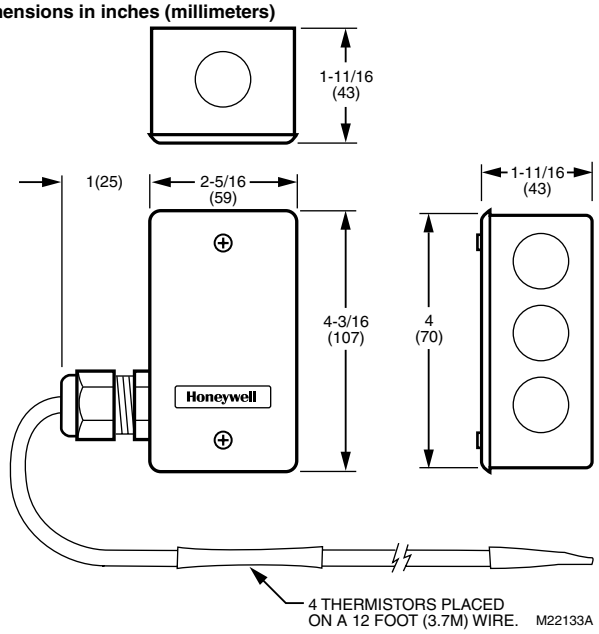

Dimensions in inches (millimeters)

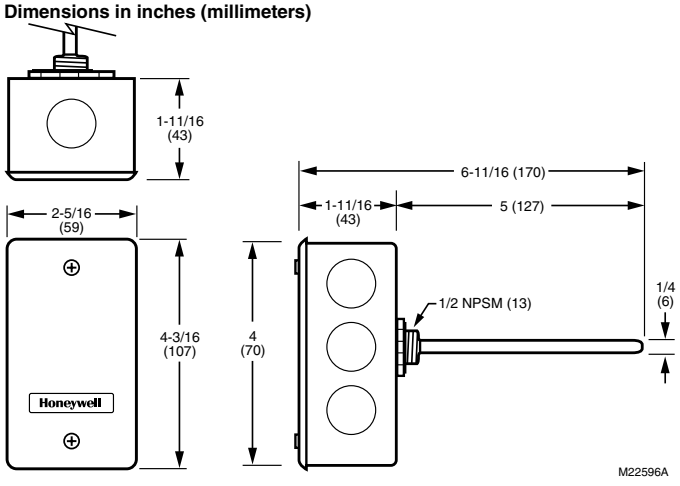

Dimensions in inches (millimeters)

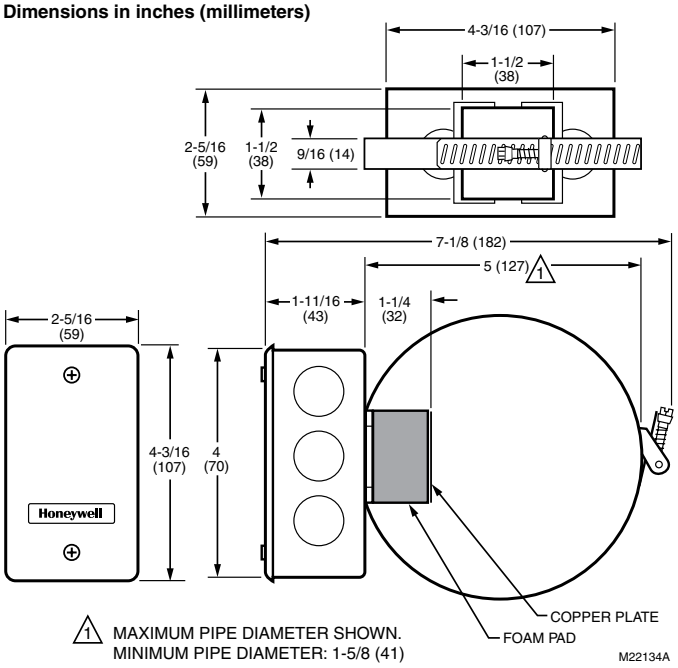

Temperature Sensors

Dimensions in inches (millimeters)

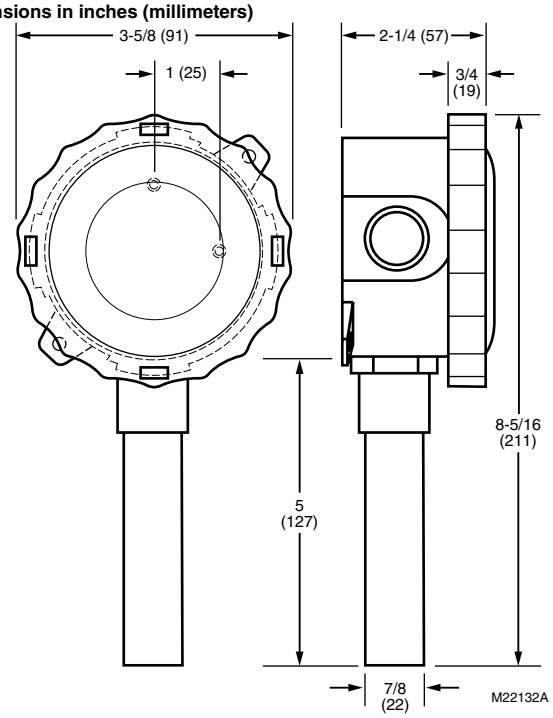

Dimensions in inches (millimeters)

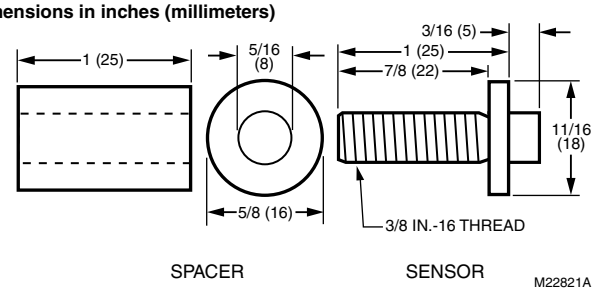

Dimensions in inches (millimeters)

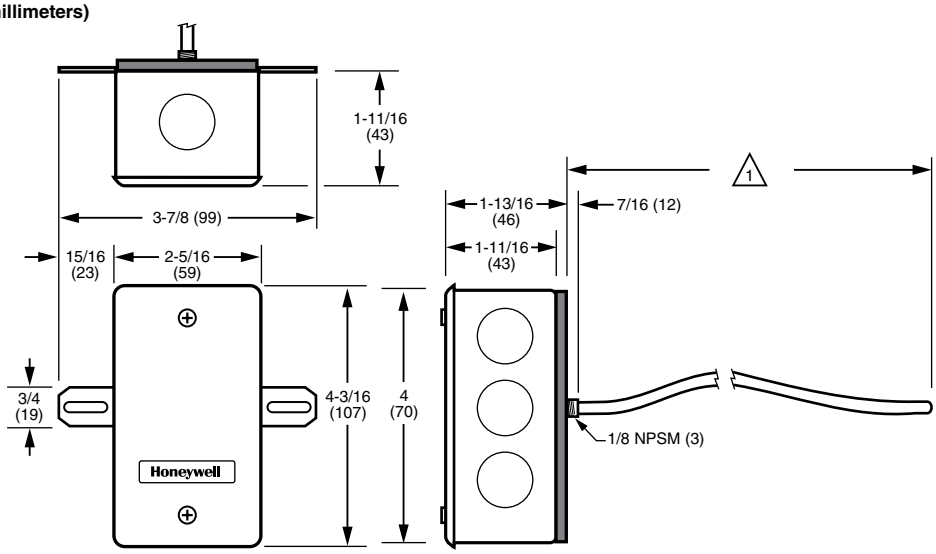

1 DEPENDING ON THE MODEL, THE ELEMENT LENGTH IS EITHER 12 FT (366 CM) OR 24 FT (732 CM).

M22818A

C7023 10K ohm NTC Type III Temperature Sensors

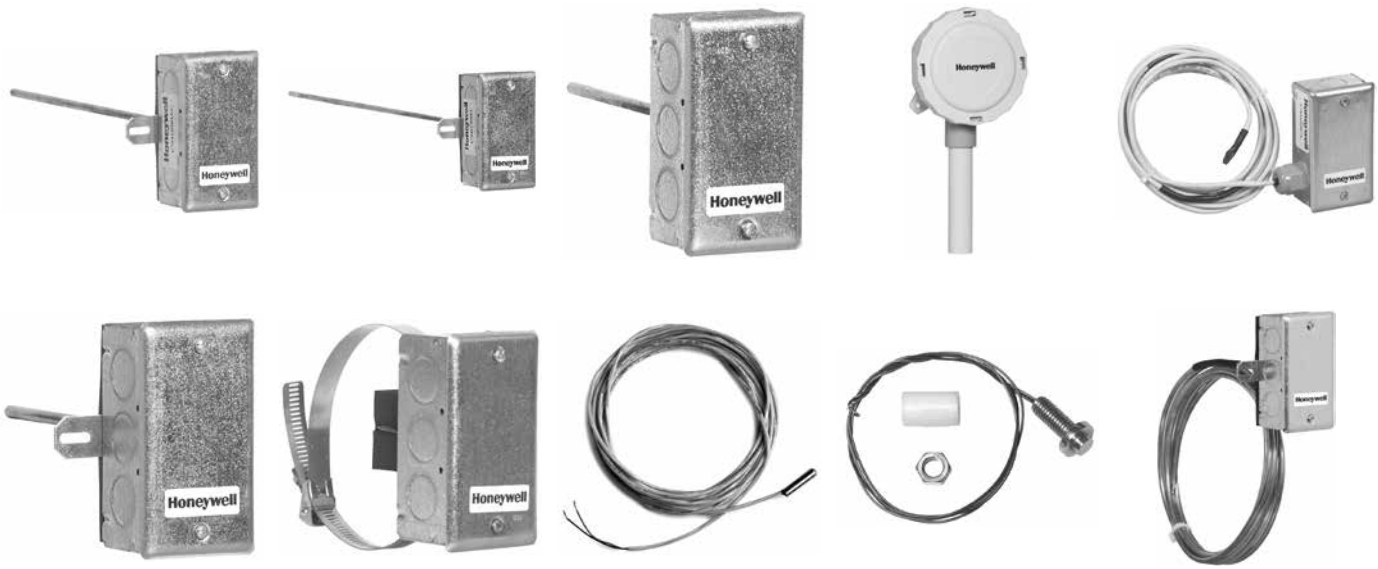

The C7023 Series 2000 Electronic Temperature Sensors are designed for use with electronic controllers in domestic or commercial heating and cooling systems.

- C7023D for immersion mounting sense water temperature.
- C7023F sense outdoor air temperature and are weatherproof for outdoor use (knockouts allow for 1/2 in. conduit connection).
- C7023J, R sense average duct air temperature.
- C7023B, C sense duct air temperature.
- C7023K with strap-on mounting senses water temperature.
- C7023N probe senses water or air temperature.
- C7023P senses air temperature.
- Solid state components not affected by dust or dirt.

Sensor: 10 K ohm NTC @ 77°F Type III
Shipping and Storage Temperature Range: -30°F to +160°F (-34°C to +71°C)
Used With: WEBs-AX I/O Modules

Material Number	Application	Insertion Length	Operating Temperature Range	Ambient Temperature Range
C7023B2005/U	Duct	6 in. (152 mm)	-40°F to +250°F (-40°C to +121°C)	250°F Maximum (121°C Maximum)
C7023B2013/U	Duct	12 in. (305 mm)	-40°F to +250°F (-40°C to +121°C)	250°F Maximum (121°C Maximum)
C7023C2003/U	Duct	18 in. (457 mm)	-40°F to +250°F (-40°C to +121°C)	250°F Maximum (121°C Maximum)
C7023D2001/U	Immersion sensor for hot or chilled water, purchase well 50001774-001 separately	5 in. (127 mm)	-40°F to +250°F (-40°C to +121°C)	250°F Maximum (121°C Maximum)
C7023F2009/U	Outside air temperature		-40°F to +158°F (-40°C to +70°C)	250°F Maximum (121°C Maximum)
C7023J2007/U	Duct air (averaging)	12 ft. (3.66 m)	-40°F to +250°F (-40°C to +121°C)	250°F Maximum (121°C Maximum)
C7023K2005/U	Hot or chilled water (strap on)		-40°F to +250°F (-40°C to +121°C)	250°F Maximum (121°C Maximum)
C7023N2001/U	Water or air temperature sensor (probe sensor)		-40°F to +250°F (-40°C to +121°C)	250°F Maximum (121°C Maximum)
C7023P2004/U	Temperature Sensor		-40°F to +250°F (-40°C to +121°C)	250°F Maximum (121°C Maximum)
C7023R2000/U	Duct air (averaging)	12 ft. (3.66 m)	-40°F to +250°F (-40°C to +121°C)	250°F Maximum (121°C Maximum)
C7023R2018/U	Duct air (averaging)	24 ft. (7.3 m)	-40°F to +250°F (-40°C to +121°C)	250°F Maximum (121°C Maximum)

Temperature Sensors

Dimensions in inches (millimeters)

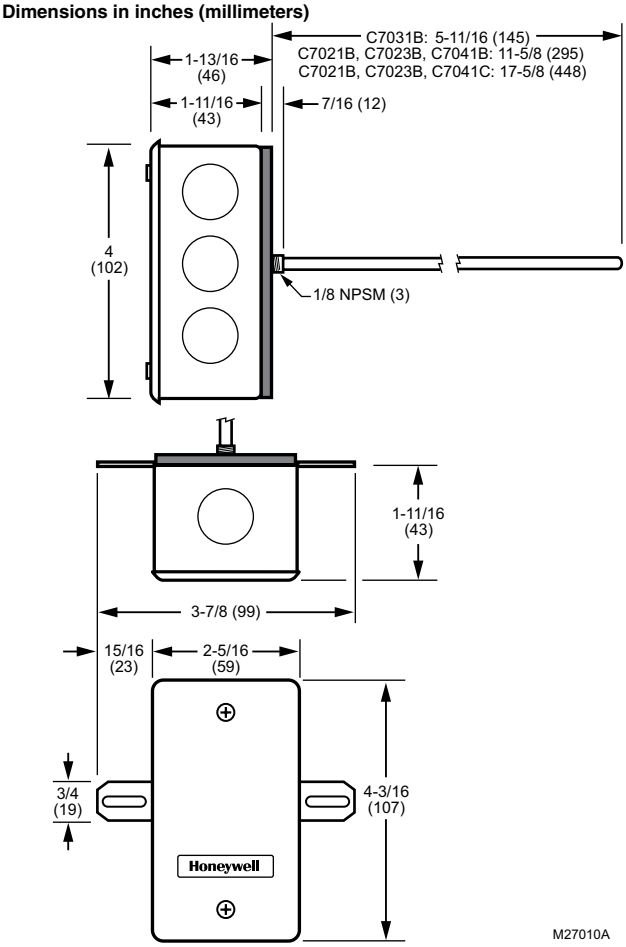

Dimensions in inches (millimeters)

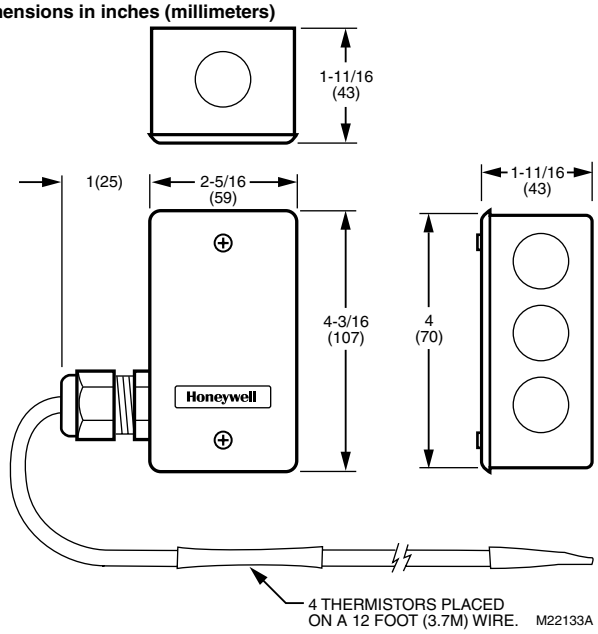

Dimensions in inches (millimeters)

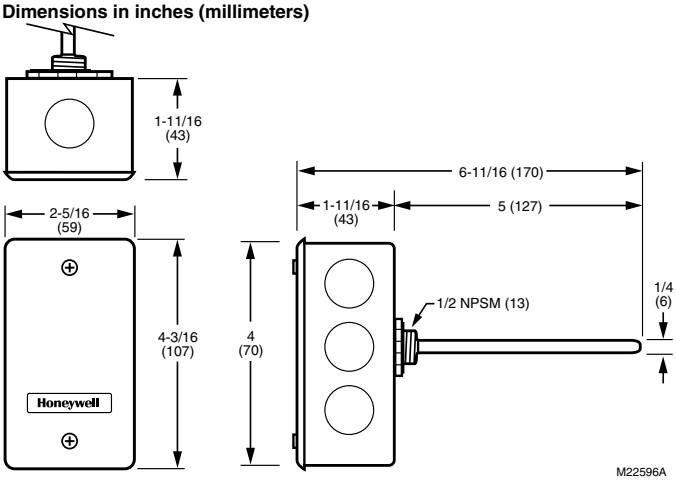

Dimensions in inches (millimeters)

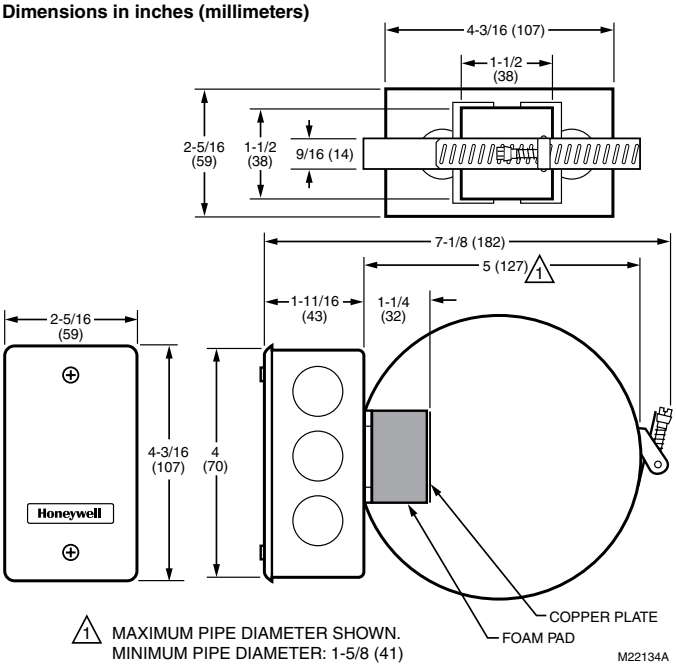

Dimensions in inches (millimeters)

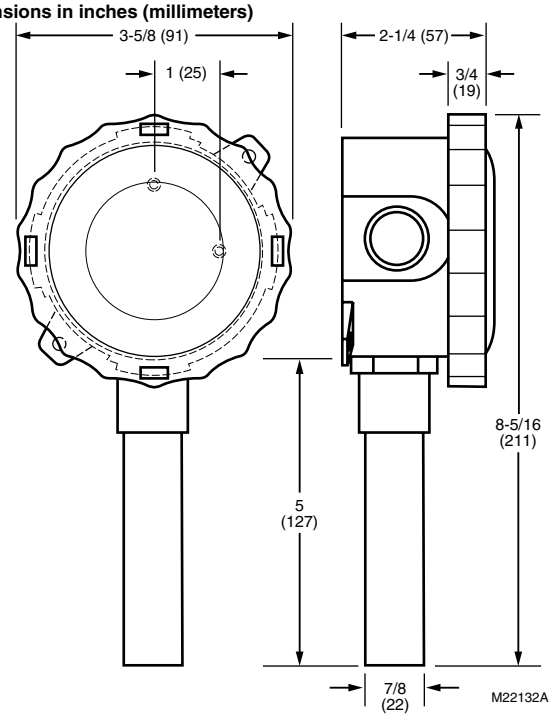

Dimensions in inches (millimeters)

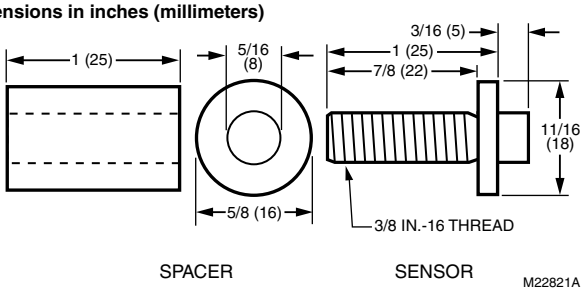

Dimensions in inches (millimeters)

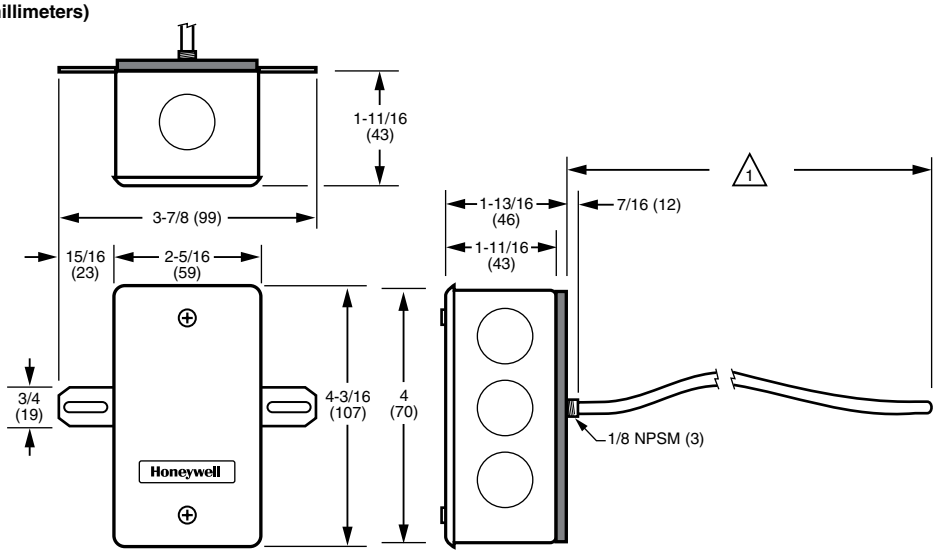

1 DEPENDING ON THE MODEL, THE ELEMENT LENGTH IS EITHER 12 FT (366 CM) OR 24 FT (732 CM).

M22818A

C7031 Electronic Temperature Sensors

Electronic temperature sensors used with DDC Systems.

- Solid state thermistor element provides accurate sensing of temperature changes.

Shipping and Storage Temperature Range: -30°F to +160°F (-34°C to +71°C)

Material Number	Application	Sensor	Insertion Length	Operating Temperature Range	Ambient Temperature Range	Includes	Used With
C7031B2005/U	Duct	1097 ohm PTC @ 77°F	6 in. (152 mm)	-40°F to +250°F (-40°C to +121°C)	250°F Maximum (121°C Maximum)		Excel 10, 50, 80, 100, 500, T775 Series 2000
C7031D2003/U	Hot or chilled water	PT1000, 1097 ohms @ 77°F	5 in. (127 mm)	-40°F to +350°F (-40°C to +177°C)	250°F Maximum (121°C Maximum)	Well	Excel 500, T775 Series 2000
C7031G2006/U	Outside air temperature	1715 @ 90°F NTC		-40°F to +120°F (-40°C to +49°C)	120°F Maximum (49°C Maximum)		W7100 (outdoor reset)
C7031G2014/U	Outside air temperature	PT3000, 3484 ohms @ 77°F		-40°F to +120°F (-40°C to +49°C)	120°F Maximum (49°C Maximum)		T7350
C7031J2009/U	Duct	PT1000, 1097 ohms @ 77°F PTC	144 in. (3658 mm)	40°F to 180°F (4°C to 82°C)	250°F Maximum (121°C Maximum)		Excel 500, T775 Series 2000

Dimensions in inches (millimeters)

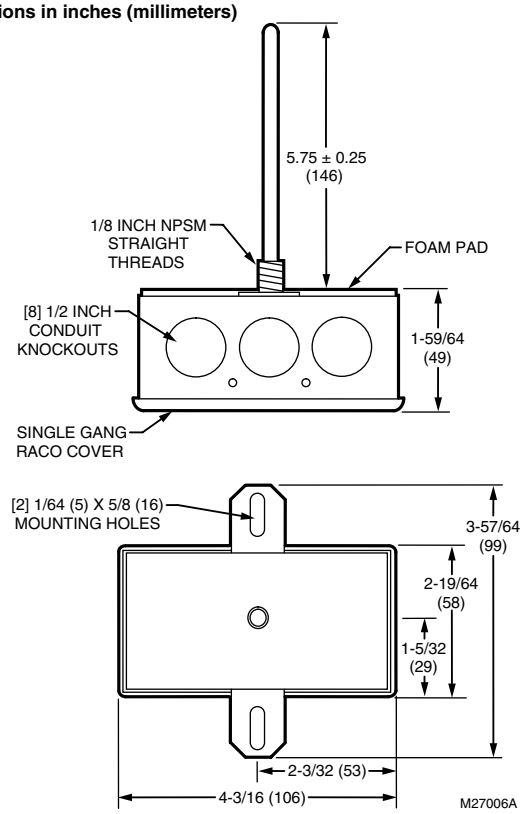

Dimensions in inches (millimeters)

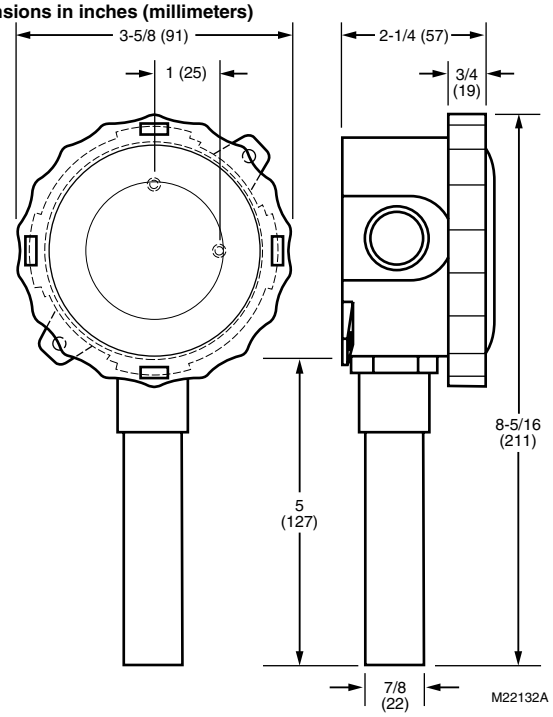

Dimensions in inches (millimeters)

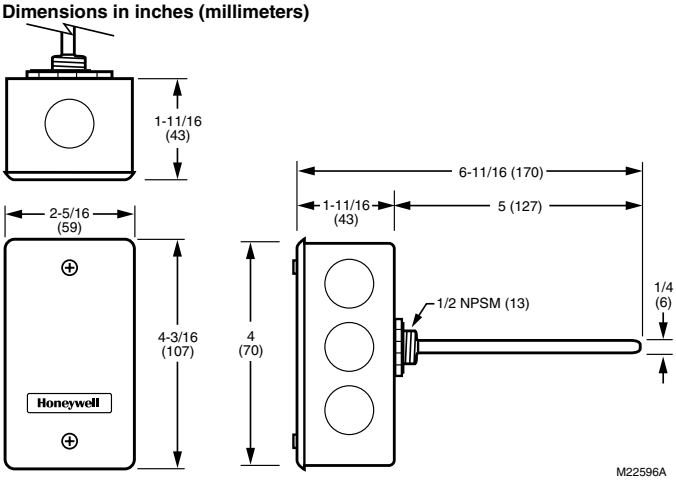

Dimensions in inches (millimeters)

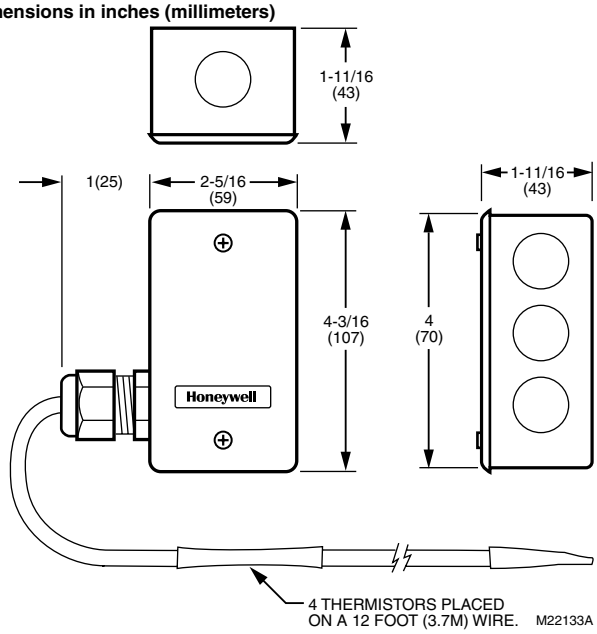

C7031 Accessories and Replacement Parts

Material Number	Application	Description
32005960-001/U	Temperature Sensor Part or Accessory	Immersion well for C7031D1062 and C7041D1003 models only, not for use with newer C7041D2001
32006523-001/U	Temperature Sensor Part or Accessory	Temperature probe for C7031D1062

C7041 20K ohm NTC Temperature Sensors

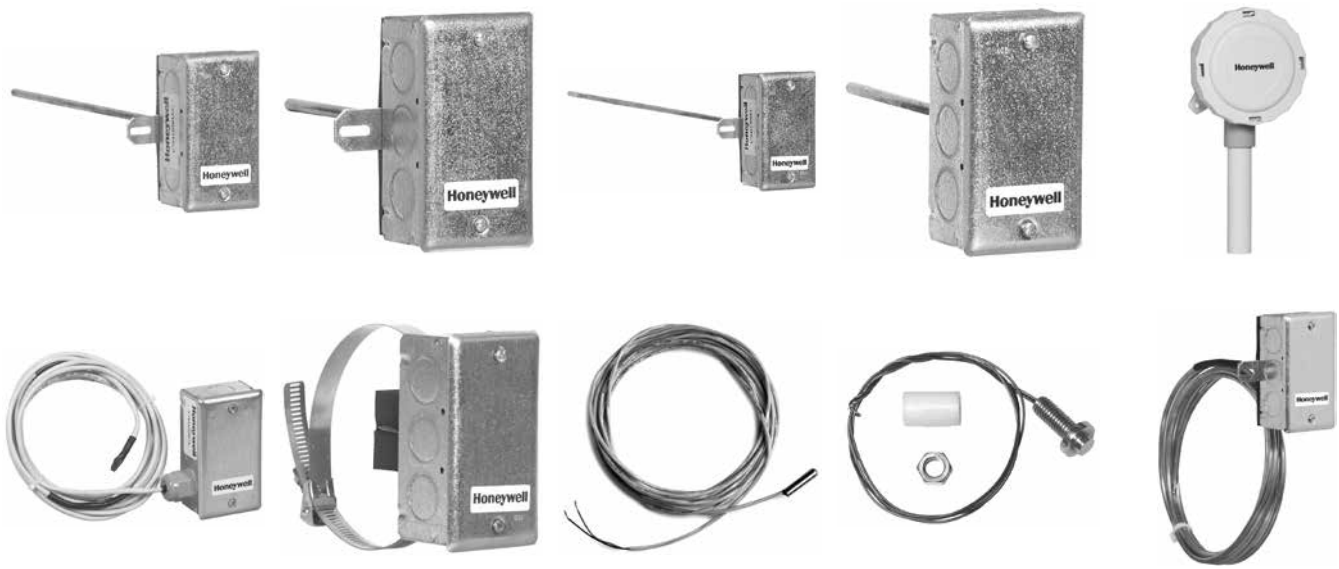

The C7041 Electronic Temperature Sensors are 20 K ohm NTC sensors designed to be used with electronic controllers in domestic or commercial heating and cooling systems.

- The C7041 series of electronic temperature sensors are designed for use with the Excel 10, Excel 15, or any controller requiring a 20 K ohm NTC non-linearized sensor input.
- Various models are available for sensing duct air temperature, averaging air temperature, water temperature, outdoor air temperature, or water pipe temperature.
- All devices consist of a temperature sensitive element and leadwires enclosed for protection from physical damage.
- Sensor element enclosures are made of various lengths and configurations for the specific applications.
- All devices have a wiring box housing to enclose the field wiring connections. C7041F outdoor sensor design, made of aluminum and stainless steel, is waterproof, and includes a sunshield.

Sensor: 20 K ohm NTC @ 77°F
Shipping and Storage Temperature Range: -30°F to +160°F (-34°C to +71°C)
Used With: Excel 10, 50, 80, 100, 500

Accessories:
50001774-001/U – 5 inch Stainless Steel Immersion Well for Use with C7041D2001
50001775-001/U – Immersion well adaptor, to adapt new C7041D2001 to fit into old brass 32005960-001 well used with old C7031D1062 and C7041D1003

Material Number	Application	Insertion Length	Operating Temperature Range	Ambient Temperature Range
C7041B2005/U	Duct	6 in. (152 mm)	-40°F to +250°F (-40°C to +121°C)	250°F Maximum (121°C Maximum)
C7041B2013/U	Duct	12 in. (305 mm)	-40°F to +250°F (-40°C to +121°C)	250°F Maximum (121°C Maximum)
C7041C2003/U	Duct	18 in. (457 mm)	-40°F to +250°F (-40°C to +121°C)	250°F Maximum (121°C Maximum)
C7041D2001/U	Immersion sensor for hot or chilled water, purchase well 50001774-001 separately	5 in. (127 mm)	-40°F to +250°F (-40°C to +121°C)	250°F Maximum (121°C Maximum)
C7041F2006/U	Outside air temperature		-40°F to +158°F (-40°C to +70°C)	250°F Maximum (121°C Maximum)
C7041J2007/U	Duct air (averaging)	12 ft. (3.66 m)	-40°F to +250°F (-40°C to +121°C)	250°F Maximum (121°C Maximum)
C7041K2005/U	Hot or chilled water (strap on)		-40°F to +250°F (-40°C to +121°C)	250°F Maximum (121°C Maximum)
C7041N2020/U	Water or air temperature sensor (probe sensor)		-40°F to +250°F (-40°C to +121°C)	250°F Maximum (121°C Maximum)
C7041P2004/U	Temperature Sensor		-40°F to +250°F (-40°C to +121°C)	250°F Maximum (121°C Maximum)
C7041R2000/U	Duct air (averaging)	12 ft. (3.66 m)	-40°F to +250°F (-40°C to +121°C)	250°F Maximum (121°C Maximum)
C7041R2018/U	Duct air (averaging)	24 ft. (7.3 m)	-40°F to +250°F (-40°C to +121°C)	250°F Maximum (121°C Maximum)

Dimensions in inches (millimeters)

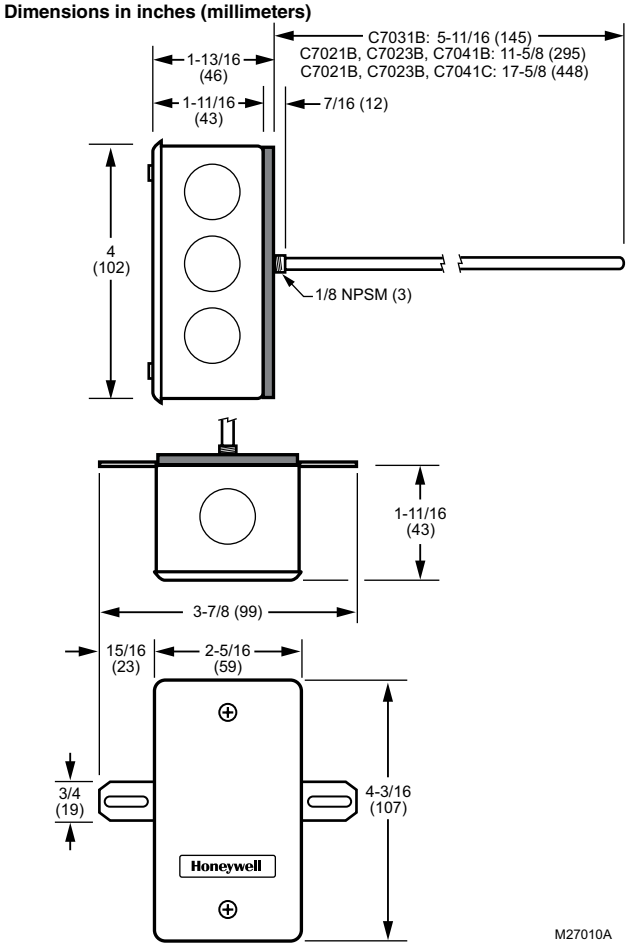

Dimensions in inches (millimeters)

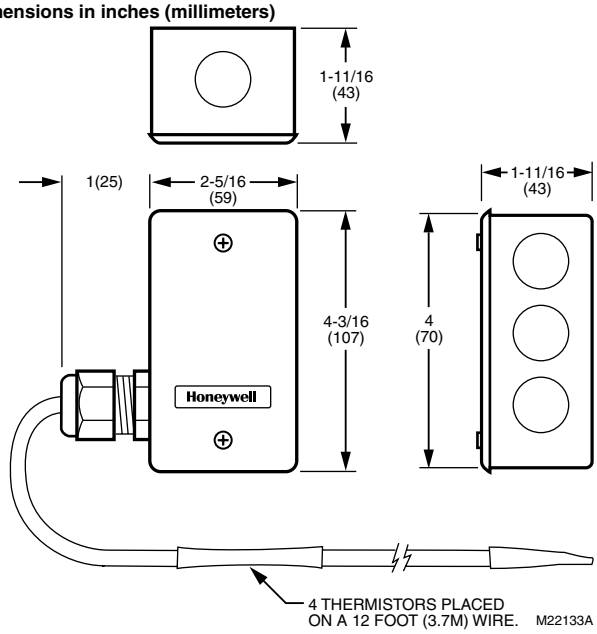

Dimensions in inches (millimeters)

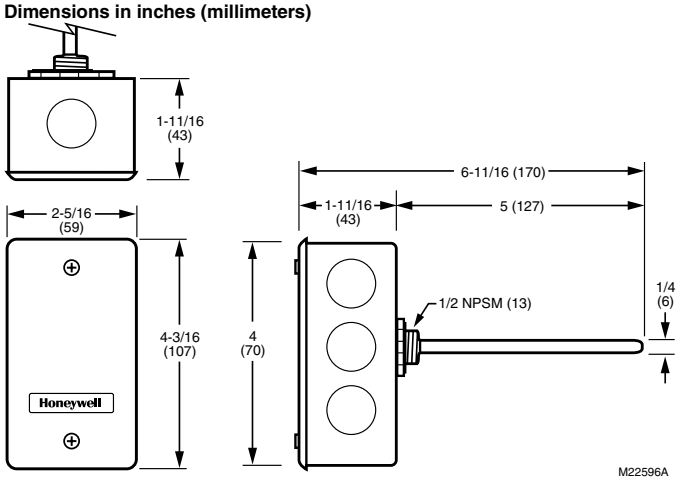

Dimensions in inches (millimeters)

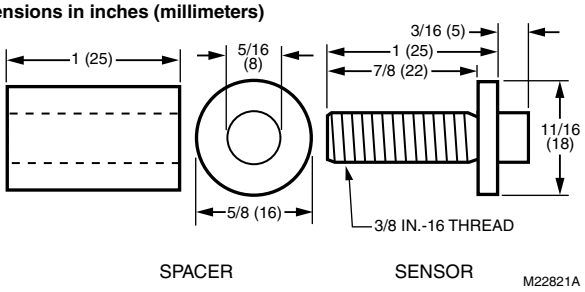

Temperature Sensors

Dimensions in inches (millimeters)

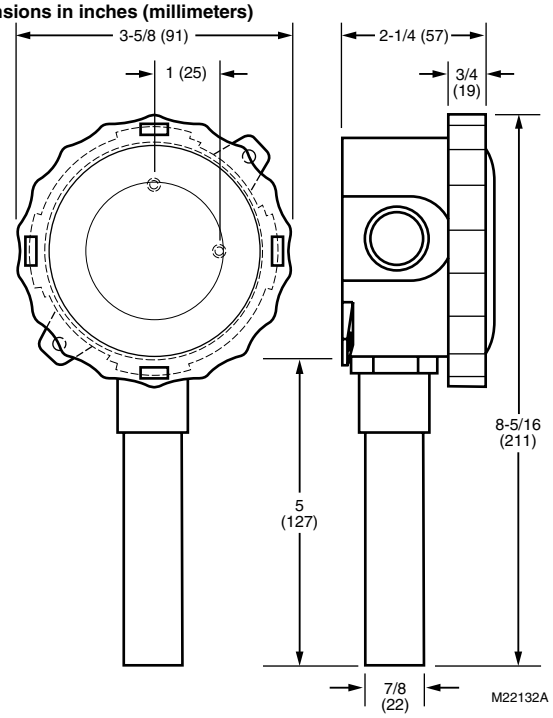

Dimensions in inches (millimeters)

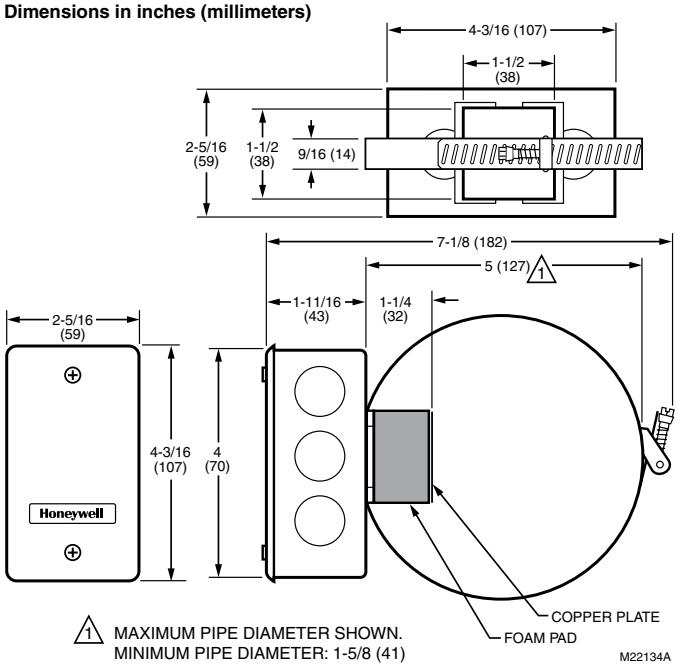

Dimensions in inches (millimeters)

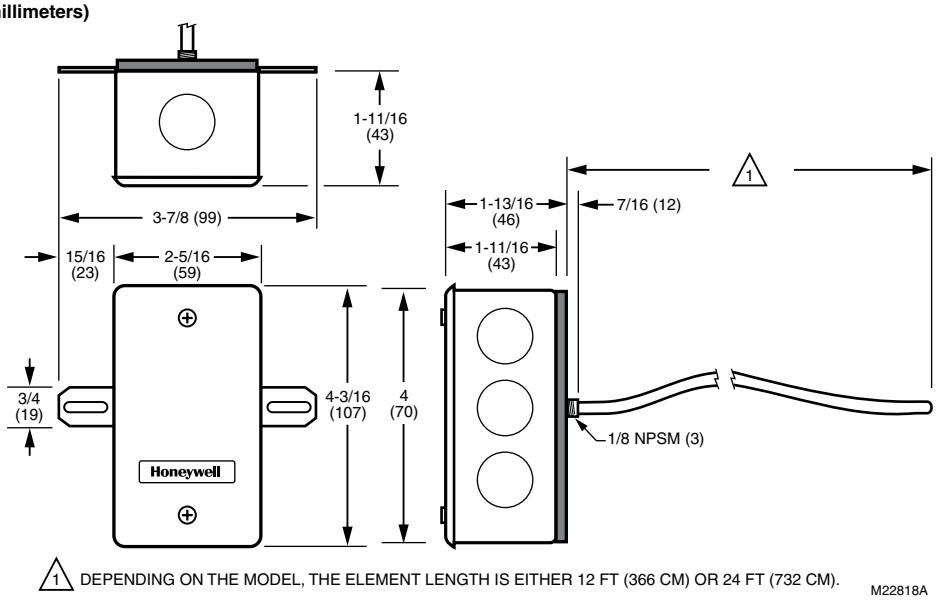

C7041 Temperature Sensor Accessories

Material Number	Description	Application	Used With
50001774-001/U	5 inch Stainless Steel Immersion Well for Use with C7041D2001	Temperature Sensor Part or Accessory	C7031D2003 and C7041D2001 only
50001775-001/U	Immersion well adaptor, to adapt new C7041D2001 to fit into old brass 32005960-001 well used with old C7031D1062 and C7041D1003	Temperature Sensor Part or Accessory	C7031D2000, C7041D2000 series to thread into old 32005960-001

C7046 Discharge Air Temperature Sensors

Air Temperature Sensors function as primary and/or secondary sensors in electronic control systems.

- No settings or calibration required.
- Solid state components not affected by dust or dirt.
- Fast reacting.
- Rugged aluminum insertion probe.
- Mounts on duct or plenum surface with integral mounting flange, or in a 2 x 4 in. junction box.

Application: Primary and/or secondary sensors in electronic control systems
Mounting: Mounts on flat duct or plenum surface with integral mounting flange or in a 2 in. x 4 in. (51 mm x 102 mm) junction box.
Operating Temperature Range: 40°F to 150°F (4°C to 66°C)
Ambient Temperature Range: 250°F Maximum (121°C Maximum)
Shipping and Storage Temperature Range: -30°F to +160°F (-34°C to +71°C)
Includes: 6 in. leadwires
Comments: Quick response time. Sensor probe diameter is 1/4 in. (6 mm). 6 in. leadwires.

Material Number	Sensor	Insertion Length	Approximate, Dimensions	Used With
C7046A1004/U	3K ohm @ 77°F NTC	8 in. (203 mm)	1 in. high x 2 in. wide x 9 in. deep (25 mm high x 51 mm wide x 229 mm deep)	W973, W6210, W6215, W7210, W7215, W7459, W7460
C7046A1038/U	3K ohm @ 77°F NTC	12 in. (305 mm)	1 in. high x 2 in. wide x 13 in. deep (25 mm high x 51 mm wide x 330 mm deep)	W973, W6210, W6215, W7210, W7215, W7459, W7460
C7046B1010/U	22.8 K ohm NTC @ 77°F	6 in. (152 mm)	1 in. high x 2 in. wide x 7 in. deep (25 mm high x 51 mm wide x 178 mm deep)	W7080
C7046C1000/U	3K ohm @ 77°F NTC	8 in. (203 mm)	1 in. high x 2 in. wide x 9 in. deep (25 mm high x 51 mm wide x 229 mm deep)	W973
C7046D1008/U	1097 ohm @ 77°F PTC	8 in. (203 mm)	1 in. high x 2 in. wide x 9 in. deep (25 mm high x 51 mm wide x 229 mm deep)	Excel 600, Excel 500, Excel 100, Excel 80, and T775 Series 2000

C7100 Averaging Duct Temperature Sensors

Averaging Duct Temperature Sensors are used to sense temperature in discharge duct.

- Use to troubleshoot system operation.
- Platinum positive temperature coefficient sensor.
- Factory calibrated; no settings or field calibration required.

Mounting: Discharge Duct
Ambient Temperature Range: 250°F Maximum (121°C Maximum)
Shipping and Storage Temperature Range: -30°F to +150°F (-34°C to +66°C)
Approximate, Dimensions: 1 13/16 in. high x 1 13/16 in. wide x 13 1/4 in. deep (46 mm high x 46 mm wide x 336 mm deep)
Comments: Recessed 1/4 in. (6 mm) quick-connect terminals. 3/4 in. (19 mm) diameter sensor probe.

Material Number	Application	Sensor	Insertion Length	Operating Temperature Range	Used With
C7100A1015/U	Averaging Duct Temperature Sensors	PT3000, 3484 ohms @ 77°F PTC	13 in. (330 mm)	40°F to 220°F (4°C to 104°C)	W7100, W8900
C7100B1013/U	Averaging Duct Temperature Sensors	22.8 K ohm @ 77°F NTC	13 in. (330 mm)	40°F to 150°F (4°C to 64°C)	W7080
C7100C1003/U	Averaging Duct Temperature Sensors	PT3000, 3484 ohms @ 77°F PTC	13 in. (330 mm)	40°F to 220°F (4°C to 104°C)	T775 Series 1000
C7100D1001/U	Averaging Duct Temperature Sensors	PT1000, 1097 ohms @ 77°F PTC	13 in. (330 mm)	40°F to 220°F (4°C to 104°C)	Excel 500, T775 Series 2000

C7130 Wall Mount Temperature Sensor

The C7130A, B Wall-Mount Air Temperature Sensors provide the input required by the R7380J, L, W7100, W7600, W7620, and Excel 500 Control Systems to sense air temperature in indoor spaces.

- C7130A Wall-mount Temperature Sensor:
- Intended for use as an indoor air sensor with the R7380J, L Indicating Controller, the W7100 Discharge Controller, the W7600 Direct Digital Controller, and the W7620 Direct Digital Controller.
- C7130B Wall-mount Temperature Sensor
- Intended for use as an indoor air sensor with the Excel 500 Controller.

Application: Intended for monitoring or controlling temperature in conjunction with an electronic control
Mounting: Wall mount
Operating Temperature Range: -40°F to +100°F (-40°C to +38°C)
Ambient Temperature Range: 150°F Maximum (66°C Maximum)
Shipping and Storage Temperature Range: -40°F to +150°F (-40°C to +65°C)
Approximate, Dimensions: 2 13/16 in. high x 4 5/8 in. wide (71.4 mm high x 118 mm wide)

Material Number	Description	Sensor	Used With
C7130A1001/U	PT 3000 Temperature Sensor	PT3000, 3484 ohms @ 77°F PTC	R7380J, L, W7100, W7600, W7620
C7130B1009/U	PT 1000 Temperature Sensor	PT1000, 1097 ohms @ 77°F PTC	Excel 500, T775 Series 2000

C7170 Immersion Sensor

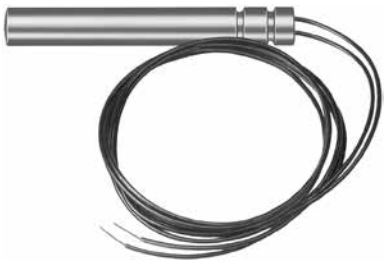

Primary electronic temperature sensor for the R7380J, L, W7100 and W7505 load inputs for immersion, strap-on and duct mounting.

- Requires no setting or calibration.
- Sensor can be located up to 1195 ft. (340 m) from controller.
- Pigtail leads.

Application: Intended for monitoring or controlling temperature in conjunction with an electronic control
Insertion Length: 3 in. (76 mm)
Mounting: Immersion or strap-on discharge
Operating Humidity Range (% RH): 90% RH at 90°F, non-condensing
Operating Temperature Range: -40°F to +250°F (-40°C to +125°C)
Shipping and Storage Temperature Range: -40°F to +302°F (-40°C to +150°C)
Approximate, Dimensions: 3/8 in. dia. x 2 5/8 in. long (10 mm dia. x 66 mm long)

Material Number	Description	Sensor	Comments	Used With
C7170A1002/U	PT 3000 Temperature Sensor with 24" leads	PT3000, 3484 ohms @ 77°F PTC	Use immersion well 121371A copper or 121371E steel.; 24 in. pigtail leads	R7380J, L, W7100, W7600, W7620
C7170A1010/U	PT 3000 Temperature Sensor with 180" leads	PT3000, 3484 ohms @ 77°F PTC	Use immersion well 121371A copper or 121371E steel.; 180 in. pigtail leads	R7380J, L, W7100, W7600, W7620
C7170B1000/U	PT 1000 Temperature Sensor with 24" leads	PT1000, 1097 ohms @ 77°F PTC	Use immersion well 121371A copper or 121371E steel.	Excel 500, T775 Series 2000

C7750 Duct Probe

The C7750A temperature sensor senses discharge or return air in a duct. It consists of a temperature sensitive 20 K ohm thermistor that is connected on a circuit board to two linearizing resistors in series-parallel configuration.

- A primary and/or secondary sensor for use with electronic control systems.
- Designed with an integral linearized 20 K ohm thermistor.
- Operating range of 45 to 99°F (7.2 to 37.2°C).
- Intended for mounting on a flat duct or plenum surface or (for a plenum-rated application) in a standard utility conduit box.
- Probe length of 6-1/2 in. (165 mm) and a nominal sensor resistance of 8000 ohms at 77°F (25°C).
- Rugged aluminum insertion probe.

Application: Primary and/or secondary sensors in electronic control systems
Mounting: Mounts on flat duct or plenum surface with integral mounting flange or in a 2 in. x 4 in. (51 mm x 102 mm) junction box.
Operating Humidity Range (% RH): 5 to 95% RH, non-condensing
Operating Temperature Range: 45°F to 99°F (7°C to 37°C)

Shipping and Storage Temperature Range: -40°F to +150°F (-40°C to +65°C)
Approximate, Dimensions: 1 in. high x 2 in. wide x 7 in. deep (25 mm high x 51 mm wide x 177 mm deep)
Used With: XL10, W7751

Material Number	Sensor	Insertion Length	Description
C7750A3006/U	20 K ohm NTC linear	6 in. (152 mm)	20 K ohm NTC linear Temperature Sensor, used with Excel 10, Series 1000 only

C7770A Duct Probe

Direct wired temperature sensor used to sense discharge or return air temperature in a duct controlled by an Excel 10 Series 2000 Controller.

- Primary and/or secondary sensor for use with electronic control systems.
- Integral 20 K ohm non-linear NTC thermistor.
- Rugged aluminum insertion probe.

Application: Primary and/or secondary sensors in electronic control systems
Mounting: Mounts on flat duct or plenum surface with integral mounting flange or in a 2 in. x 4 in. (51 mm x 102 mm) junction box.
Operating Humidity Range (% RH): 5 to 95% RH, non-condensing
Operating Temperature Range: 45°F to 99°F (7°C to 37°C)

Shipping and Storage Temperature Range: -40°F to +150°F (-40°C to +65°C)
Approximate, Dimensions: 1 in. high x 2 in. wide x 7 in. deep (25 mm high x 51 mm wide x 177 mm deep)
Used With: XL10, W7751

Material Number	Sensor	Insertion Length	Description	Comments
C7770A1006/U	20 K ohm NTC non-linear	6 in. (152 mm)	6 in. Duct Probe for Return Air 20 K ohm NTC non-linear Temperature Sensor	
C7770A1040/U	20 K ohm NTC non-linear	6 in. (152 mm)	6 in. Duct Probe for Return Air 20 K ohm NTC non-linear Temperature Sensor	6 foot plenum rated cable

C7772 Flush Mount Sensors

C7772 Temperature Sensors are designed for the Excel 5000 family and other Honeywell controllers. They provide a resistive output signal and are well suited for low profile wall mounted applications.

- Low profile when mounted on industry standard utility conduit box.
- Rugged, brushed stainless steel wallplate.
- Integral foam pad isolates wallplate sensor from conduit box.
- Insulated screw terminals ensure reliable field wiring connection.
- Models available with a variety of resistive temperature sensor elements.

Application: Low profile wall mounted where durability and tamper proof construction is desired
Mounting: Wall mount
Operating Humidity Range (% RH): 5 to 95% RH, non-condensing
Operating Temperature Range: 45°F to 99°F (7°C to 37°C)
Shipping and Storage Temperature Range: -40°F to +150°F (-40°C to +65°C)
Approximate, Dimensions: 4 1/2 in. high x 2 3/4 in. wide (114 mm high x 70 mm wide)

Dimensions in inches (millimeters)

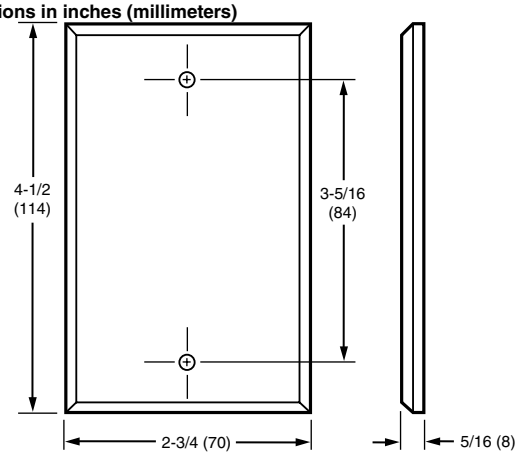

M16295B

Material Number	Sensor	Description	Comments	Used With
C7772A1004/U	20 K ohm NTC non-linear	20 K ohm NTC non-linear Wall Flush Mount Temperature Sensor without logo		Excel 5000 family
C7772A1012/U	20 K ohm NTC non-linear	20 K ohm NTC non-linear Wall Flush Mount Temperature Sensor with Honeywell logo	with Honeywell logo, looks very professional and facilitates finding sensor after installation	Excel 5000 family
C7772F1004/U	10 K ohm NTC Type II non-linear	10 K ohm NTC Type II non-linear Wall Flush Mount Temperature Sensor without logo		TB7600, TB7300, TB7200 Series communicating thermostats
C7772F1012/U	10 K ohm NTC Type II non-linear	10 K ohm NTC Type II non-linear Wall Flush Mount Temperature Sensor with Honeywell logo	with Honeywell logo, looks very professional and facilitates finding sensor after installation	TB7600, TB7300, TB7200 Series communicating thermostats
C7772G1004/U	10 K ohm NTC Type III non-linear	10 K ohm NTC Type III non-linear Wall Flush Mount Temperature Sensor without logo		WEBs-AX I/O Modules
C7772G1012/U	10 K ohm NTC Type III non-linear	10 K ohm NTC Type III non-linear Wall Flush Mount Temperature Sensor with Honeywell logo	with Honeywell logo, looks very professional and facilitates finding sensor after installation	WEBs-AX I/O Modules

C7776A Duct Probe

The C7776 Air Temperature Sensors are direct wired temperature sensors that are used to sense discharge or return air in a duct. The sensors are 10 K ohm NTC Type II sensors that are compatible with TB7600, TB7300, and TB7200 communicating thermostats.

- Primary and/or secondary sensor for use with electronic control systems
- Integral 10 K ohm NTC Type II nonlinear sensors
- Operating range of 45°F to 99°F (7°C to 37°C)
- Mounts on a flat duct or plenum surface or, for a plenum-rated application, in a standard utility conduit box
- Probe length of 6 in. (152 mm)
- Rugged 1/4 in. diameter aluminum insertion probe

Application: Primary and/or secondary sensors in electronic control systems
Mounting: Mounts on flat duct or plenum surface with integral mounting flange or in a 2 in. x 4 in. (51 mm x 102 mm) junction box.
Operating Humidity Range (% RH): 5 to 95% RH, non-condensing
Operating Temperature Range: 45°F to 99°F (7°C to 37°C)

Shipping and Storage Temperature Range: -40°F to +150°F (-40°C to +65°C)
Approximate, Dimensions: 1 in. high x 2 in. wide x 7 in. deep (25 mm high x 51 mm wide x 177 mm deep)
Used With: TB7600, TB7300, TB7200 Series communicating thermostats

Material Number	Sensor	Insertion Length	Description	Comments
C7776A1006/U	10 K ohm NTC Type II non-linear	6 in. (152 mm)	6 in. Duct Probe for Return Air 10 K ohm NTC Type II non-linear Temperature Sensor	
C7776A1040/U	10 K ohm NTC Type II non-linear	6 in. (152 mm)	6 in. Duct Probe for Return Air 10 K ohm NTC Type II non-linear Temperature Sensor with 6 foot plenum rated cable	6 foot plenum rated cable

C7778A Duct Probe

The C7778 Air Temperature Sensors are direct wired temperature sensors that are used to sense discharge or return air in a duct. The sensors are 10 K ohm NTC Type III sensors that are compatible with WEBs-AX I/O modules.

- Primary and/or secondary sensor for use with electronic control systems
- Integral 10 K ohm NTC Type III nonlinear sensors
- Operating range of 45°F to 99°F (7°C to 37°C)
- Mounts on a flat duct or plenum surface or, for a plenum-rated application, in a standard utility conduit box
- Probe length of 6 in. (152 mm)
- Rugged 1/4 in. diameter aluminum insertion probe

Application: Primary and/or secondary sensors in electronic control systems
Mounting: Mounts on flat duct or plenum surface with integral mounting flange or in a 2 in. x 4 in. (51 mm x 102 mm) junction box.
Operating Humidity Range (% RH): 5 to 95% RH, non-condensing
Operating Temperature Range: 45°F to 99°F (7°C to 37°C)

Shipping and Storage Temperature Range: -40°F to +150°F (-40°C to +65°C)
Approximate, Dimensions: 1 in. high x 2 in. wide x 7 in. deep (25 mm high x 51 mm wide x 177 mm deep)
Used With: WEBs-AX I/O Modules

Material Number	Sensor	Insertion Length	Description	Comments
C7778A1006/U	10 K ohm NTC Type III non-linear	6 in. (152 mm)	6 in. Duct Probe for Return Air 10 K ohm NTC Type III non-linear Temperature Sensor	
C7778A1040/U	10 K ohm NTC Type III non-linear	6 in. (152 mm)	6 in. Duct Probe for Return Air 10 K ohm NTC Type III non-linear Temperature Sensor with 6 foot plenum rated cable	6 foot plenum rated cable

T7022A Return Air Temperature Sensor

The T7022 Remote Temperature Sensor is a non-adjustable thermistor sensor. Its primary use is with the T7300 Programmable Commercial Thermostat (only in return air) to control heating or cooling equipment.

Application: Remote Temperature Sensors for use with T7300 thermostats
Operating Temperature Range: 60°F to 90°F (16°C to 32°C)
Approximate, Dimensions: 3/8 in. dia. x 2 3/4 in. long (10 mm dia. x 70 mm long)
Used With: T7300, T7067B, W927

Material Number	Sensor	Insertion Length	Description
T7022A1010/U	1420 ohms @ 75°F	2 3/4 in. (70 mm)	1420 ohm Remote Temperature Sensor

T7047 Remote Temperature Sensors for use with T7300 Thermostats

The T7047 Electronic Thermostats, Remote Space Sensors are used with T7300 thermostats and W973 controller to provide modulating space temperature control.

- T7047C is a 2-wire remote space sensor for applications requiring remote setpoint adjustment.
- T7047G is a 2-wire remote space sensor used as one half of an averaging sensor network.
- T7047C, G contain a carbon type negative temperature coefficient (NTC) thermistor sensing element.
- Locking cover.

Application: Provides modulating space temperature control
Mounting: Mounts on wall or 2 x 4 inch vertical outlet box
Operating Temperature Range: 40°F to 110°F (4°C to 43°C)
Approximate, Dimensions: 4 5/8 in. high x 3 5/8 in. wide x 1 5/16 in. deep (118 mm high x 93 mm wide x 33 mm deep)
Used With: T7300/Q7300

Dimensions in inches (millimeters)

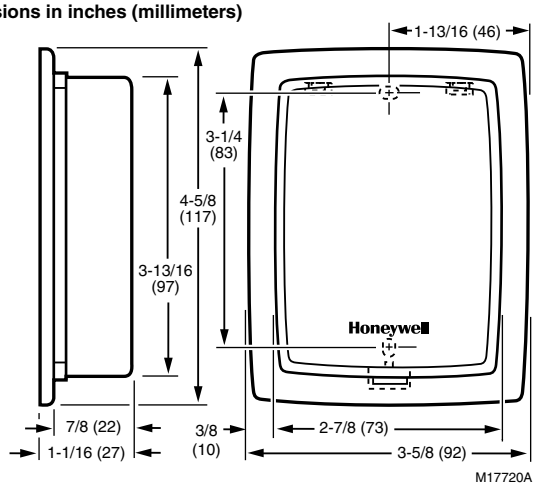

Material Number	Sensor	Color	Description	Comments
T7047C2007/U	1420 ohms @ 75°F	Taupe	1420 ohm Electronic Thermostat Sensor	Series 2000 styling
T7047C2015/U	1420 ohms @ 75°F	Premier White®	1420 ohm Electronic Thermostat Sensor	Series 2000 styling
T7047G2008/U	710 ohm @ 75°F	Taupe	710 ohm Electronic Thermostat Sensor	Series 2000 styling, for averaging only.
T7047G2016/U	710 ohm @ 75°F	Premier White®	710 ohm Electronic Thermostat Sensor	Series 2000 styling, for averaging only.

T7047 Accessories

Material Number	Description
190389A/U	Cover assembly for T7047A, B series 1000 styling

T7560 Digital Wall Modules

Electronic wall modules with LCD for use with XL10 controllers.

- 2 models configurable to cover all applications.
- T7560B has Humidity sensor.
- Intuitive and easy to operate.

Application: Networked Sensor
Sensor: 20 K ohm NTC
Operating Humidity Range (% RH): 5 to 90% RH, non-condensing
Setpoint Temperature Range: 55°F to 85°F (12°C to 30°C)
Operating Temperature Range: 32°F to 104°F (0°C to 40°C)
Shipping and Storage Temperature Range: -40°F to +140°F (-40°C to +60°C)
Approximate, Dimensions: 4 1/8 in. high x 3 15/16 in. wide x 13/16 in. deep (104 mm high x 99 mm wide x 30 mm deep)
Approvals, Underwriters Laboratories Inc.: Listed: per Standard 916
Approvals, CE: Approved
Approvals, N.E.C.: Class II
Used With: Excel 10 Controllers

Dimensions in inches (millimeter)

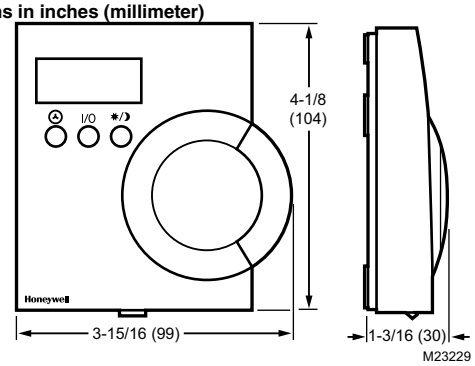

Material Number	Color	Description	Includes
T7560A1018	White with blue knob	20 K ohm NTC Digital Wall Module for Excel 5000 family	Setpoint Wheel, Unoccupied/Occupied override, and LCD display for temperature, setpoint and fan status
T7560A1042	White with white knob	20 K ohm NTC Digital Wall Module for Excel 5000 family	Setpoint Wheel, Unoccupied/Occupied override, and LCD display for temperature, setpoint and fan status
T7560B1016	White with blue knob	20 K ohm NTC Digital Wall Module for Excel 5000 family, includes Humidity sensor	Humidity sensor, Setpoint Wheel, Unoccupied/Occupied override, and LCD display for temperature, setpoint, fan status and humidity
T7560B1032	White with white knob	20 K ohm NTC Digital Wall Module for Excel 5000 family, includes Humidity sensor	Humidity sensor, Setpoint Wheel, Unoccupied/Occupied override, and LCD display for temperature, setpoint, fan status and humidity

T7650 Accessories

Material Number	Description	Application	Network Communications	Used With
T7460-LONJACK	Lon Jack for T7560	Networked Sensor	LonWorks Bus	T7560A, B

T775 Series 2000 Sensors

A family of general use, simple to use, broadly featured electronic temperature and universal controllers for use in HVAC, agricultural, and industrial applications.

- Use the T775-SENS-OAT to measure outside air temperature.
- Some typical applications for the 50021579-001 and T775-SENSWT/WR sensors include monitoring return air, discharge air, and mixed air temperatures
- Sensors have fast response time and highly accurate
- Sensors have 1/2 in. (6.35 mm) stainless steel probe with a thermally conductive epoxy
- Sensors are 1,097 Ohms PTC at 77°F (25°C)
- The 50021579-001 is a standard temperature sensor for indoor applications
- The T775-SENS-WR is a water-resistant sensor with 5 ft leads
- The T775-SENS-WT is a water-tight sensor with 6 ft leads
- The T775-SENS-OAT is for sensing outdoor air temperature and is housed in a weatherproof case for outdoor use (knockouts allow for 1/2 in. conduit connection)
- Two-year warranty

Shipping and Storage Temperature Range: -30°F to +160°F (-34°C to +71°C)
Used With: T775 Series 2000

Material Number	Application	Sensor	Operating Temperature Range	Comments
50021579-001/U	Standard temperature probe that comes with most T775S	1097 ohms @ 77°F PTC	-40°F to 350°F (-40°C to 177°C)	9 inch leads
T775-SENS-OAT/U	Outside air temperature	PT1000, 1097 ohms @ 77°F PTC	-40°F to 158°F (-40°C to 70°C)	
T775-SENS-STRAP/U	Hot or chilled water (strap on)	PT1000, 1097 ohms @ 77°F PTC	-40°F to +250°F (-40°C to +121°C)	
T775-SENS-WR/U	Monitoring return air, discharge air, and mixed air temperatures	PT1000, 1097 ohms @ 77°F PTC	-40°F to 270°F (-40°C to 132°C)	Water-resistant sensor; 5 ft. leads
T775-SENS-WT/U	Monitoring return air, discharge air, and mixed air temperatures	PT1000, 1097 ohms @ 77°F PTC	-40°F to 270°F (-40°C to 132°C)	Water-tight sensor; 6 ft. leads

Dimensions in inches (millimeters)

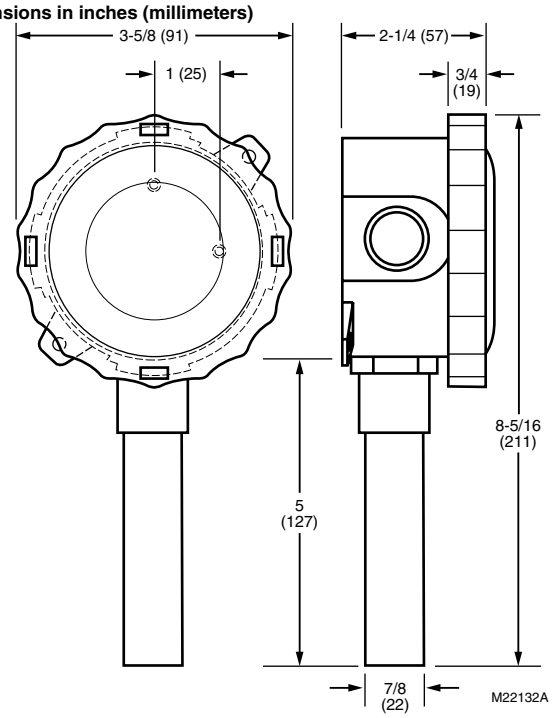

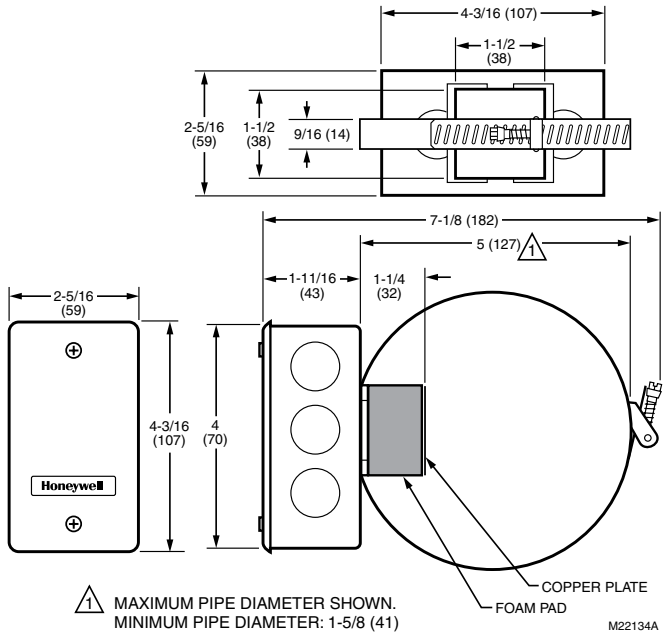

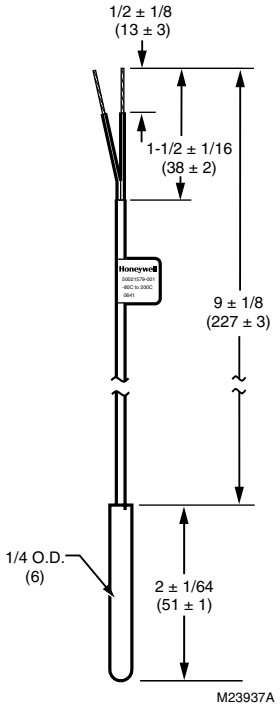
1/2 ± 1/8
(13 ± 3)
1-1/2 ± 1/16
(38 ± 2)
9 ± 1/8
(227 ± 3)
1/4 O.D.
(6)
2 ± 1/64
(51 ± 1)
M23937A

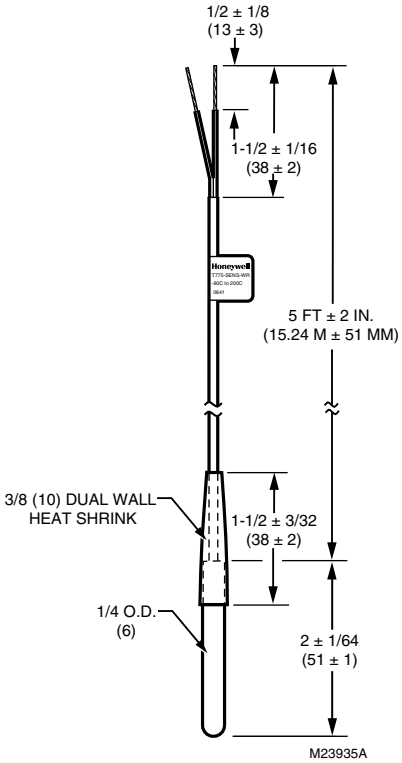
1/2 ± 1/8
(13 ± 3)
1-1/2 ± 1/16
(38 ± 2)
5 FT ± 2 IN.
(15.24 M ± 51 MM)
3/8 (10) DUAL WALL
HEAT SHRINK
1-1/2 ± 3/32
(38 ± 2)
1/4 O.D.
(6)
2 ± 1/64
(51 ± 1)
M23935A

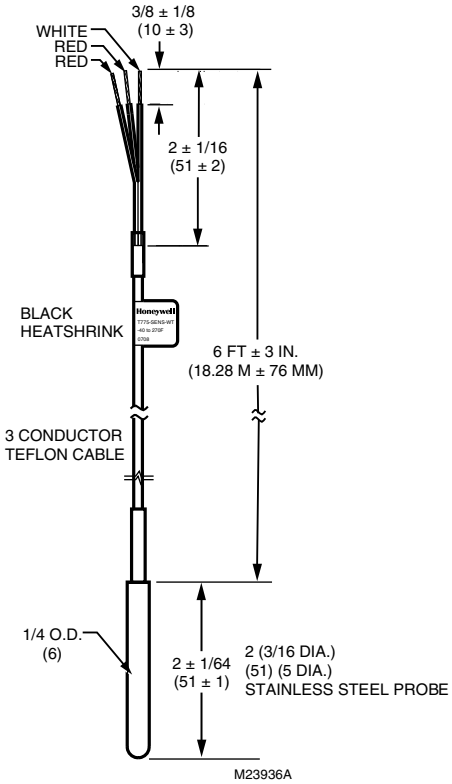
WHITE
RED
RED
3/8 ± 1/8
(10 ± 3)
2 ± 1/16
(51 ± 2)
BLACK
HEATSHRINK
6 FT ± 3 IN.
(18.28 M ± 76 MM)
3 CONDUCTOR
TEFLON CABLE
1/4 O.D.
(6)
2 ± 1/64
(51 ± 1)
2 (3/16 DIA.)
(51) (5 DIA.)
STAINLESS STEEL PROBE
M23936A

T7771 Wall Module

Temperature Sensor for use with T7350.

- Push button setpoint adjustment with LED indicators.
- Occupied/unoccupied override (bypass) with LED.
- LONWORKS® bus jack.
- Operating range 45 to 99°F (7 to 37°C).

Application: Remote Room Temperature Sensor for use with T7350 thermostat
Color: White
Operating Humidity Range (% RH): 5 to 95% RH, non-condensing
Setpoint Temperature Range: offset ±3°F (offset ± 1.67°C)
Operating Temperature Range: 45°F to 99°F (7°C to 37°C)
Shipping and Storage Temperature Range: -40°F to +150°F (-40°C to +65°C)
Approximate, Dimensions: 5 1/16 in. high x 3 1/8 in. wide x 1 in. deep (128 mm high x 80 mm wide x 25 mm deep)
Approvals, N.E.C.: Class II
Used With: T7350

Material Number	Sensor	Network Communications	Mounting	Comments
T7771A1005/U	20 K ohm NTC non-linear	LonWorks Bus	Mounted on a standard 2 x 4 inch junction box or on a 60 mm diameter junction box.	Can be configured to output 10K ohms for use in multiple sensor averaging with TR21.

TB-WALL 10K ohm NTC Type II Temperature Sensors

Honeywell 10K ohm NTC Type II remote wall sensors are for use with the TB7200, TB7300, and TB7600 Series communicating thermostats and other devices requiring a 10K ohm NTC Type II sensor. These robust sensors provide accurate and stable temperature readings using a 10K ohm NTC thermistor element. The TB-WALL sensors can also be used for temperature averaging applications. Two or three TB wall sensors can be used and are quickly configured with the on-board dip switches. Temperature averaging with the usual 4, 9, 16, 25, etc. sensors can also be done with the TB wall sensors.

Mounting: Wall mount
Operating Humidity Range (% RH): 0 to 95% RH, non-condensing
Operating Temperature Range: 32°F to 122°F (0°C to 50°C)
Shipping and Storage Temperature Range: -22°F to +122°F (-30°F to +50°F)
Approximate, Dimensions: 5 in. high x 3 3/8 in. wide x 1 5/32 in. deep (125 mm high x 86 mm wide x 29 mm deep)
Used With: TB7600, TB7300, TB7200 Series communicating thermostats

Material Number	Application	Sensor	Description
TB-WALL-1014/U	Wall temperature sensor	10 K ohm NTC @ 77°F Type II	10K ohm NTC Type II Wall Temperature Sensor
TB-WALLOVR-1014/U	Wall temperature sensor with override	10 K ohm NTC @ 77°F Type II	10K ohm NTC Type II Wall Temperature Sensor with Override

TR20 Series Wall Modules

The TR21, TR22, TR23, and TR24 are a family of direct wired wall modules for use with Honeywell Excel 600, 500, 100, and 80 controllers; Excel 10 W7750, W7751A, W7752, and W7753 controllers; W7761 Controller; and Spyder Unitary Controllers.

- Models available with user selectable setpoint adjustment dials in Fahrenheit, Celsius and Relative Scales
- Models available with occupied/unoccupied override (bypass) with LED
- Models available with 3-position (auto/0/1) or 5-position (auto/0/1/2/3 speed) fan switch
- LONWORKS network jack on all models except the TR21 and TR21-A models
- Models available with on board humidity sensor, humidity output: 0-10 Vdc, 0-5 Vdc, 4-20 mA selectable

Mounting: Wall or standard 2 x 4 inch junction box or on a 60 mm diameter junction box; Vertical mount
Color: White
Operating Humidity Range (% RH): 5 to 95% RH, non-condensing
Setpoint Temperature Range: 55°F to 85°F (13°C to 30°C)
Operating Temperature Range: 45°F to 99°F (7°C to 37°C)
Approximate, Dimensions: 4 13/16 in. high x 3 in. wide x 7/8 in. deep with out knob; 4 13/16 in. high x 3 in. wide x 1 in. deep with knob (122 mm high x 76.5 mm wide x 22 mm deep without knob; 122 mm high x 76.5 mm wide x 26.5 mm deep with knob)

Approvals, Underwriters Laboratories Inc.: UL94-HB plastic enclosure
Approvals, CE: Approved
Approvals, FCC: FCC Part 15, Class B
Used With: Spyder, Excel 600, 500, 100, 80 and Excel 10, 15 Series Controllers; Also used with the T7350 Thermostats

Material Number	Application	Network Communications	Sensor	Switch Positions (Fan)	Shipping and Storage Temperature Range	Comments	Includes
TR21/U	Wall Module Networked Sensor	None	20 K ohm NTC non-linear		-40°F to +150°F (-40°C to +65°C)		
TR21-A/U	Averaging multiple sensors	None	Unique 10 K ohm non-linear, two 20 Ks in parallel		-40°F to +150°F (-40°C to +65°C)	Special 10K ohm for use only when averaging multiple sensors, can also be used with Thermostats	
TR21-A-US/U	Averaging multiple sensors	None	Unique 10 K ohm non-linear, two 20 Ks in parallel		-40°F to +150°F (-40°C to +65°C)	Meet ARRA Requirements; Special 10K ohm for use only when averaging multiple sensors	
TR21-H/U	Wall Module Networked Sensor	LonWorks Bus	20 K ohm NTC non-linear		-40°F to +150°F (-40°C to +65°C)		Humidity and LON Jack
TR21-H-US/U	Wall Module Networked Sensor	LonWorks Bus	20 K ohm NTC non-linear		-40°F to +150°F (-40°C to +65°C)	Meet ARRA Requirements	Humidity and LON Jack
TR21-J/U	Wall Module Networked Sensor	LonWorks Bus	20 K ohm NTC non-linear		-40°F to +150°F (-40°C to +65°C)		LON Jack
TR21-J-US/U	Wall Module Networked Sensor	LonWorks Bus	20 K ohm NTC non-linear		-40°F to +150°F (-40°C to +65°C)	Meet ARRA Requirements	LON Jack
TR21-US/U	Wall Module Networked Sensor	None	20 K ohm NTC non-linear		-40°F to +150°F (-40°C to +65°C)	Meet ARRA Requirements	
TR22/U	Wall Module Networked Sensor	LonWorks Bus	20 K ohm NTC non-linear		-40°F to +150°F (-40°C to +65°C)		Selectable Setpoint dials in Fahrenheit, Celsius, and Relative (- to +) and LON Jack
TR22-F5/U	Wall Module Networked Sensor	LonWorks Bus	20 K ohm NTC non-linear	AUTO-OFF-1-2-3	-40°F to +150°F (-40°C to +65°C)		Selectable Setpoint dials in Fahrenheit, Celsius, and Relative (- to +), LON Jack, and 5 position fan
TR22-F5-US/U	Wall Module Networked Sensor	LonWorks Bus	20 K ohm NTC non-linear	AUTO-OFF-1-2-3	-40°F to +150°F (-40°C to +65°C)	Meet ARRA Requirements	Selectable Setpoint dials in Fahrenheit, Celsius, and Relative (- to +), LON Jack, and 5 position fan
TR22-US/U	Wall Module Networked Sensor	LonWorks Bus	20 K ohm NTC non-linear		-40°F to +150°F (-40°C to +65°C)	Meet ARRA Requirements	Selectable Setpoint dials in Fahrenheit, Celsius, and Relative (- to +) and LON Jack
TR23/U	Wall Module Networked Sensor	LonWorks Bus	20 K ohm NTC non-linear		-40°F to +150°F (-40°C to +65°C)		Selectable Setpoint dials in Fahrenheit, Celsius, and Relative (- to +), LON Jack and Override Button with LED
TR23-F3/U	Wall Module Networked Sensor	LonWorks Bus	20 K ohm NTC non-linear	AUTO-OFF-ON	-40°F to +150°F (-40°C to +65°C)		Selectable Setpoint dials in Fahrenheit, Celsius, and Relative (- to +), LON Jack, Override Button with LED and 3 position fan

Temperature Sensors

Material Number	Application	Network Communications	Sensor	Switch Positions (Fan)	Shipping and Storage Temperature Range	Comments	Includes
TR23-F3-US/U	Wall Module Networked Sensor	LonWorks Bus	20 K ohm NTC non-linear	AUTO-OFF-ON	-40°F to +150°F (-40°C to +65°C)	Meet ARRA Requirements	Selectable Setpoint dials in Fahrenheit, Celsius, and Relative (- to +), LON Jack, Override Button with LED and 3 position fan
TR23-F5/U	Wall Module Networked Sensor	LonWorks Bus	20 K ohm NTC non-linear	AUTO-OFF-1-2-3	-40°F to +150°F (-40°C to +65°C)		Selectable Setpoint dials in Fahrenheit, Celsius, and Relative (- to +), LON Jack, Override Button with LED and 5 position fan
TR23-F5-US/U	Wall Module Networked Sensor	LonWorks Bus	20 K ohm NTC non-linear	AUTO-OFF-1-2-3	-40°F to +150°F (-40°C to +65°C)	Meet ARRA Requirements	Selectable Setpoint dials in Fahrenheit, Celsius, and Relative (- to +), LON Jack, Override Button with LED and 5 position fan
TR23-H/U	Wall Module Networked Sensor	LonWorks Bus	20 K ohm NTC non-linear		-40°F to +150°F (-40°C to +65°C)		Humidity, Selectable Setpoint dials in Fahrenheit, Celsius, and Relative (- to +), LON Jack and Override Button with LED.
TR23-H-KL/B	Wall Module Networked Sensor	LonWorks Bus	20 K ohm NTC non-linear		-40°F to +150°F (-40°C to +65°C)	Setpoint knobs not included	on-board humidity sensor
TR23-H-US/U	Wall Module Networked Sensor	LonWorks Bus	20 K ohm NTC non-linear		-40°F to +150°F (-40°C to +65°C)	Meet ARRA Requirements	Humidity, Selectable Setpoint dials in Fahrenheit, Celsius, and Relative (- to +), LON Jack and Override Button with LED.
TR23-KL/B	Wall Module Networked Sensor	LonWorks Bus	20 K ohm NTC non-linear		-40°F to +150°F (-40°C to +65°C)	Setpoint adjustment knobs not included	
TR23-KL/U	Wall Module Networked Sensor	LonWorks Bus	20 K ohm NTC non-linear		-40°F to +150°F (-40°C to +65°C)	Setpoint adjustment knobs not included	
TR23-N/U	Wall Module Networked Sensor	LonWorks Bus	20 K ohm NTC non-linear		-40°F to +150°F (-40°C to +65°C)	no Honeywell logo	Selectable Setpoint dials in Fahrenheit, Celsius, and Relative (- to +), LON Jack and Override Button with LED
TR23-N-US/U	Wall Module Networked Sensor	LonWorks Bus	20 K ohm NTC non-linear		-40°F to +150°F (-40°C to +65°C)	no Honeywell logo; Meet ARRA Requirements	Selectable Setpoint dials in Fahrenheit, Celsius, and Relative (- to +), LON Jack and Override Button with LED
TR23-US/U	Wall Module Networked Sensor	LonWorks Bus	20 K ohm NTC non-linear		-40°F to +150°F (-40°C to +65°C)	Meet ARRA Requirements	Selectable Setpoint dials in Fahrenheit, Celsius, and Relative (- to +), LON Jack and Override Button with LED
TR24/U	Wall Module Networked Sensor	LonWorks Bus	20 K ohm NTC non-linear		-40°F to +150°F (-40°C to +65°C)		LON Jack and Override Button with LED
TR24-US/U	Wall Module Networked Sensor	LonWorks Bus	20 K ohm NTC non-linear		-40°F to +150°F (-40°C to +65°C)	Meet ARRA Requirements	LON Jack and Override Button with LED
TR29/U	Enclosure for any 1/4-in. or 3/8-in. diameter probe sensor; W9076, T775 wall mounted sensor	None	None		-40°F to +150°F (-40°C to +65°C)		

Replacement Parts for the TR20 Series Wall Modules

Comments: sold in packs of 20
Used With: TR20 Series Wall Modules

Material Number	Color	Description
KNOB-C/U	White	Replacement Knobs - Celsius Scale, pack of 20
KNOB-F/U	White	Replacement Knobs - Fahrenheit Scale, pack of 20
KNOB-O/U	White	Replacement Knobs - Relative Scale, pack of 20

TR20 Series Wireless Wall Sensor Kits

The WRECVR receiver and TR21-WS, TR23-WS, TR21-WK, and TR23-WK sensors are a family of wireless wall modules and receivers. All models report space temperature; TR23 models come with setpoint adjustment and override.

- Wall module to Receiver (point to point) wireless kits can replace any standard wired sensor
- Wireless Kits (wall module and receiver) are pre-bound at the factory for quick installation
- Signal Strength LED built into the wall module
- Low battery indication
- Optional dip switches available to bind any wall module to any receiver
- Approximate 5 year battery life with AA Alkaline (included), 7.5 year with Lithium
- Locking screw discourages tampering and battery theft

Application: Wall Module
Operating Humidity Range (% RH): 5 to 95% RH, non-condensing
Setpoint Temperature Range: 55°F to 85°F (13°C to 30°C)
Shipping and Storage Temperature Range: -40°F to +150°F (-40° to + 65.5°C)
Accuracy °F (°C): ± 1°F across 53.6°F to 86°F ((± 0.5°C) across 12°C to 30°C)
Radio Frequency: 2.4 GHz (IEEE Std 802.15.4-2003 compliant)

Wireless Range: Open Range – 3000 feet; Typical Range – 100 feet
Output power: 16dBm
Battery Life: 7.5 years with two AA Lithium Batteries or 5 years with two AA Alkaline batteries (included)
Voltage: Receiver – 20-30 Vac/dc, 50/60Hz; 24 Vac typical
Approvals, FCC: FCC Part 15
Used With: Spyder, Excel 10 W7750, W7751, W7752, W7753, T7350, T7351, TB8575, WEBs-AX™ I/O Module

Material Number	Mounting	Color	Description	Operating Temperature Range	Approximate, Dimensions	Approvals, Underwriters Laboratories Inc.	Comments	Includes
TR21-WK/U	Wall mount	White Sensor	Wireless sensor kit, ships with both sensor and receiver (TR21-WS and WRECVR)	Sensor: 45°F to 99°F; Receiver: -40° to +150°F (Sensor: 7°C to 37°C; Receiver: -40° to + 65.5°C)	Receiver: 5 1/2 in. high x 3 13/64 in. wide x 2 13/64 in. deep; Sensor: 4 11/16 in. high x 3 in. wide x 7/8 in. deep (Sensor: 119 mm high x 77 mm wide x 22 mm deep; Receiver: 140 mm high x 81 mm wide x 56 mm deep)	Receiver: UL94-5VA; UL94 plastic enclosure	not compatible with TB7220, TB8220 ,TB line voltage thermostats, XL15s, W7762, W7763	TR21-WS and WRECVR
TR21-WKU/U	Wall mount		Wireless sensor kit, ships with both sensor and receiver without Honeywell logo (TR21-WSU and WRECVRU)	Sensor: 45°F to 99°F; Receiver: -40° to +150°F (Sensor: 7°C to 37°C; Receiver: -40° to + 65.5°C)	Receiver: 5 1/2 in. high x 3 13/64 in. wide x 2 13/64 in. deep; Sensor: 4 11/16 in. high x 3 in. wide x 7/8 in. deep (Sensor: 119 mm high x 77 mm wide x 22 mm deep; Receiver: 140 mm high x 81 mm wide x 56 mm deep)	Receiver: UL94-5VA; UL94 plastic enclosure	not compatible with TB7220, TB8220 ,TB line voltage thermostats, XL15s, W7762, W7763; no Honeywell logo	TR21-WSU and WRECVRU
TR23-WK/U			Wireless sensor kit, ships with both sensor and receiver	Receiver: -40° to +150°F; Sensor: 45°F to 99°F (Receiver: -40° to + 65.5°C; Sensor: 7°C to 37°C)	Sensor: 4 11/16 in. high x 3 in. wide x 1 5/8 in. deep; Receiver: 5 1/2 in. high x 3 13/64 in. wide x 2 13/64 in. deep (Receiver: 140 mm high x 81 mm wide x 56 mm deep; Sensor: 119 mm high x 77 mm wide x 29 mm deep)	UL94 plastic enclosure	not compatible with TB7220, TB8220 ,TB line voltage thermostats, XL15s, W7762, W7763	TR23-WS and WRECVR
TR23-WKU/U			Wireless sensor kit, ships with both sensor and receiver	Receiver: -40° to +150°F; Sensor: 45°F to 99°F (Receiver: -40° to + 65.5°C; Sensor: 7°C to 37°C)	Sensor: 4 11/16 in. high x 3 in. wide x 1 5/8 in. deep; Receiver: 5 1/2 in. high x 3 13/64 in. wide x 2 13/64 in. deep (Receiver: 140 mm high x 81 mm wide x 56 mm deep; Sensor: 119 mm high x 77 mm wide x 29 mm deep)	UL94 plastic enclosure; Receiver: UL94-5VA	no Honeywell logo; not compatible with TB7220, TB8220,TB line voltage thermostats, XL15s, W7762, W7763	TR23-WSU and RECVRU

TR20 Series Wireless Wall Sensors

TR21-WS and TR23-WS sensors are a family of wireless wall modules. All models report space temperature; TR23 models come with setpoint adjustment and override.

- Wall module to Receiver (point to point) wireless kits can replace any standard wired sensor
- Wireless Kits (wall module and receiver) are pre-bound at the factory for quick installation
- Signal Strength LED built into the wall module
- Low battery indication
- Optional dip switches available to bind any wall module to any receiver
- Approximate 5 year battery life with AA Alkaline (included), 7.5 year with Lithium
- Locking screw discourages tampering and battery theft

Application: Wall Module
Color: White
Mounting: Wall mount
Operating Humidity Range (% RH): 5 to 95% RH, non-condensing
Setpoint Temperature Range: 55°F to 85°F (13°C to 30°C)
Operating Temperature Range: 45°F to 99°F (7°C to 37°C)
Shipping and Storage Temperature Range: -40°F to +150°F (-40° to + 65.5°C)
Accuracy °F (°C): ± 1°F across 53.6°F to 86°F ((± 0.5°C) across 12°C to 30°C)

Radio Frequency: 2.4 GHz (IEEE Std 802.15.4-2003 compliant)
Wireless Range: Open Range – 3000 feet; Typical Range – 100 feet
Battery Life: 7.5 years with two AA Lithium Batteries or 5 years with two AA Alkaline batteries (included)
Approvals, Underwriters Laboratories Inc.: UL94 plastic enclosure
Approvals, FCC: FCC Part 15
Comments: not compatible with TB7220, TB8220 ,TB line voltage thermostats, XL15s, W7762, W7763
Used With: Spyder, Excel 10 W7750, W7751, W7752, W7753, T7350, T7351, TB8575, WEBs-AX™ I/O Module

Material Number	Description	Approximate, Dimensions	Network Communications	Output Power	Comments	Includes
TR21-WS/U	TR21 wireless temperature sensor	4 11/16 in. high x 3 in. wide x 7/8 in. deep (119 mm high x 77 mm wide x 22 mm deep)			not compatible with TB7220, TB8220, TB line voltage thermostats, XL15s, W7762, W7763	
TR21-WSU/U	TR21 Wireless Temp Sensor without Honeywell logo	4 11/16 in. high x 3 in. wide x 7/8 in. deep (119 mm high x 77 mm wide x 29 mm deep)			no Honeywell logo; not compatible with TB7220, TB8220, TB line voltage thermostats, XL15s, W7762, W7763	
TR23-WS/U	TR23 Wireless temperature sensor with Setpoint (F/C/Relative) and override button	4 11/16 in. high x 3 in. wide x 1 5/8 in. deep (119 mm high x 77 mm wide x 29 mm deep)	None	16dBm	not compatible with TB7220, TB8220, TB line voltage thermostats, XL15s, W7762, W7763	Selectable Setpoint dials in Fahrenheit, Celsius, and Relative (- to +), and Override Button
TR23-WSU/U	TR23 Wireless temperature sensor, with Setpoint (F/C/Relative) and override button, no Honeywell logo	4 11/16 in. high x 3 in. wide x 1 5/8 in. deep (119 mm high x 77 mm wide x 29 mm deep)	None	16dBm	not compatible with TB7220, TB8220, TB line voltage thermostats, XL15s, W7762, W7763; no Honeywell logo	Selectable Setpoint dials in Fahrenheit, Celsius, and Relative (- to +), and Override Button

TR20 Series Wireless Wall Modules

The WRECVR receiver and TR21-WS, TR23-WS, TR21-WK, and TR23-WK sensors are a family of wireless wall modules and receivers.

- Wall module to Receiver (point to point) wireless kits can replace any standard wired sensor
- Wireless Kits (wall module and receiver) are pre-bound at the factory for quick installation
- Signal Strength LED built into the wall module
- Low battery indication
- Optional dip switches available to bind any wall module to any receiver

Application: Wireless Receiver
Operating Humidity Range (% RH): 5 to 95% RH, non-condensing
Operating Temperature Range: -40° to +150°F (-40° to + 65.5°C)
Shipping and Storage Temperature Range: -40°F to +150°F (-40° to + 65.5°C)
Approximate, Dimensions: 5 1/2 in. high x 3 13/64 in. wide x 2 13/64 in. deep (140 mm high x 81 mm wide x 56 mm deep)
Radio Frequency: 2.4 GHz (IEEE Std 802.15.4-2003 compliant)
Wireless Range: Open Range – 3000 feet; Typical Range – 100 feet

Output power: 16dBm
Voltage: Receiver – 20-30 Vac/dc, 50/60 Hz; 24 Vac typical
Approvals, Underwriters Laboratories Inc.: UL94-5VA
Approvals, FCC: FCC Part 15

Accessories:
TR21-WS/U – TR21 wireless temperature sensor
TR23-WS/U – TR23 Wireless temperature sensor with Setpoint (F/C/Relative) and override button

Material Number	Description	Comments	Used With
WRECVR/U	Receiver used with wireless temperature sensors		TR21-WS, TR23-WS
WRECVRU/U	Receiver used with wireless temperature sensors	no Honeywell logo	TR21-WSU, TR23-WSU

Zio® LCD Wall Modules

TR70 and TR70-H are 2-wire, non-polarity sensitive, Sylk™ bus communicating wall modules for Spyder™ programmable controllers. All have a space-temperature sensor, network bus jack, and an LCD with three soft keys and two Up/Down adjustment keys.

- Ability to control user access to controller parameters.
- Parameter access can be customized by using the Tridium Niagara Workbench tool.
- Programmable for: Home screen options, tenant access, contractor access, access to controller parameters, setpoint, override, fan, and other parameters.
- Supplied with eight pre-programmed configurations (e.g. VAV with balancing) in the wall module configuration tool.
- Ability to access and adjust most parameters in the programmable controller (except Scheduling).
- Ability to balance the VAV system from the wall module.
- Home screen can display one to three of any of the following parameters: Temperature Setpoint, Room Temperature, Room Humidity, Outdoor Humidity, Outdoor Temperature, and Time, or one of virtually any parameter in the controller.
- Network bus jack.
- Simple 2-wire terminal connection to the programmable controller and an optional 2-wire terminal connection for the network. All connections are polarity insensitive.
- Retention of user configuration, including setpoints after a power outage.

Color: White
Operating Humidity Range (% RH): 5 to 95% RH, non-condensing
Operating Temperature Range: 30°F to 110°F (-1°C to 43°C)
Shipping and Storage Temperature Range: -40°F to +150°F (-40°C to 65.5°C)
Switch Positions (Fan): Configurable
Approximate, Dimensions: 3 5/16 in. wide x 4 5/8 in. high x 15/16 in. deep (84 mm wide x 117 mm high x 24 mm deep)

Network Communications: Two-wire Sylk and Network Jack
Accuracy °F (°C): ±0.36°F at 77°F (±0.2°C at 25°C)
Approvals, Underwriters Laboratories Inc.: UL94-HB plastic enclosure
Approvals, CE: Approved
Approvals, FCC: FCC Part 15
Used With: Spyder Sylk Enhanced

Material Number	Application	Setpoint Temperature Range	Accuracy	Password Protection	Scheduling	Mounting	Comments
TR71/U	Wall Module Temperature Sensor	Default range is 55°F to 85°F; configurable for other ranges (Default range is 10°C to 35°C; configurable for other ranges)		Yes	No	Vertical Mount	Configurable with Niagara Workbench
TR71-H/U	Wall Module Temperature and Humidity Sensor	Default range is 55°F to 85°F; configurable for other ranges (Default range is 10°C to 35°C; configurable for other ranges)	±5% RH from 20% to 80% RH	Yes	No	Vertical Mount	Configurable with Niagara Workbench

Zio® Lite Wall Modules

The TR40 and TR42 are 2-wire, non-polarity sensitive, Sylk bus communicating wall modules, which communicate with Spyder® and some ComfortPoint™ programmable controllers.

- Two wire, polarity insensitive Sylk provides both power and communication to the device.
- Models available with display (TR42) or without display (TR40).
- Models available with or without built in humidity or CO_2 sensors.
- TR42 models have configurable options using the Niagara tool for fan speeds and override.
- TR42 models have the ability for tenant to change between °F and °C
- TR42 models have the ability to provide tenant either a relative warmer cooler setpoint adjustment or absolute temperature setpoint adjustment

Color: White
Mounting: Vertical Mount
Operating Humidity Range (% RH): 5 to 95% RH, non-condensing
Operating Temperature Range: 32°F to 110°F (0°C to 43°C)
Shipping and Storage Temperature Range: -40°F to +150°F (-40°C to +65.5°C)
Switch Positions (Fan): Configurable
Approximate, Dimensions: 3-1/4 in. wide x 4-3/4 in. high x 7/8 in. deep

Network Communications: Two-wire Sylk
Accuracy °F (°C): ±0.36°F at 77°F (±0.2°C at 25°C)
Approvals, Underwriters Laboratories Inc.: UL94-V0 plastic enclosure
Approvals, CE: Approved
Approvals, FCC: FCC Part 15
Used With: Spyder Controllers
Password Protection: Yes

Material Number	Application	Setpoint Temperature Range	Accuracy	Comments
TR40	Temperature, Sensor Wall Module	Default range is 55°F to 85°F; configurable for other ranges (Default range is 10°C to 35°C; configurable for other ranges)		Configurable with Niagara Workbench
TR40-CO2	Temperature, CO_2 Sensor Wall Module	Default range is 55°F to 85°F; configurable for other ranges (Default range is 10°C to 35°C; configurable for other ranges)		Configurable with Niagara Workbench
TR40-H	Temperature, Humidity, Sensor Wall Module	Default range is 55°F to 85°F; configurable for other ranges (Default range is 10°C to 35°C; configurable for other ranges)	±3% RH	Configurable with Niagara Workbench
TR40-H-CO2	Temperature, Humidity, CO_2 Sensor Wall Module	Default range is 55°F to 85°F; configurable for other ranges (Default range is 10°C to 35°C; configurable for other ranges)	±3% RH	Configurable with Niagara Workbench
TR42	Temperature, Sensor Wall Module	Default range is 55°F to 85°F; configurable for other ranges (Default range is 10°C to 35°C; configurable for other ranges)		Configurable with Niagara Workbench
TR42-CO2	Temperature, CO_2 Sensor Wall Module	Default range is 55°F to 85°F; configurable for other ranges (Default range is 10°C to 35°C; configurable for other ranges)		Configurable with Niagara Workbench
TR42-H	Temperature, Humidity, Sensor Wall Module	Default range is 55°F to 85°F; configurable for other ranges (Default range is 10°C to 35°C; configurable for other ranges)	±3% RH	Configurable with Niagara Workbench
TR42-H-CO2	Temperature, Humidity, CO_2 Sensor Wall Module	Default range is 55°F to 85°F; configurable for other ranges (Default range is 10°C to 35°C; configurable for other ranges)	±3% RH	Configurable with Niagara Workbench

Zio® Plus LCD Wall Modules

TR70 and TR70-H are 2-wire, non-polarity sensitive, Sylk™ bus communicating wall modules for Spyder™ programmable controllers. All have a space-temperature sensor, network bus jack, and an LCD with three soft keys and two Up/Down adjustment keys.

- Ability to control user access to controller parameters.
- Parameter access can be customized by using the Tridium Niagara Workbench tool.
- Programmable for: Home screen options, tenant access, contractor access, access to controller parameters, setpoint, override, fan, and other parameters.
- Supplied with eight pre-programmed configurations (e.g. VAV with balancing) in the wall module configuration tool.
- Ability to access and adjust most parameters in the programmable controller (except Scheduling).
- Ability to balance the VAV system from the wall module.
- Home screen can display one to three of any of the following parameters: Temperature Setpoint, Room Temperature, Room Humidity, Outdoor Humidity, Outdoor Temperature, and Time, or one of virtually any parameter in the controller.
- Network bus jack.
- Simple 2-wire terminal connection to the programmable controller and an optional 2-wire terminal connection for the network. All connections are polarity insensitive.
- Retention of user configuration, including setpoints after a power outage.

Color: White
Mounting: Vertical Mount
Operating Humidity Range (% RH): 5 to 95% RH, non-condensing
Operating Temperature Range: 30°F to 110°F (-1°C to 43°C)
Shipping and Storage Temperature Range: -40°F to +150°F (-40°C to 65.5°C)
Switch Positions (Fan): Configurable
Approximate, Dimensions: 3 5/16 in. wide x 4 5/8 in. high x 15/16 in. deep (84 mm wide x 117 mm high x 24 mm deep)
Network Communications: Two-wire Sylk and Network Jack

Accuracy °F (°C): ±0.36°F at 77°F (±0.2°C at 25°C)
Approvals, Underwriters Laboratories Inc.: UL94-HB plastic enclosure
Approvals, CE: Approved
Approvals, FCC: FCC Part 15
Comments: Configurable with Niagara Workbench
Used With: Spyder Sylk Enhanced
Parameter Memory (Bites): 5K
Password Protection: Yes
Scheduling: Yes

Material Number	Application	Setpoint Temperature Range	Accuracy	Description
TR75/U	Wall Module Temperature Sensor	Default range is 55°F to 85°F; configurable for other ranges (Default range is 10°C to 35°C; configurable for other ranges)	±5% RH from 20% to 80% RH	Zio Plus LCD Wall Module (Temperature)
TR75-H/U	Wall Module Temperature and Humidity Sensor	Default range is 55°F to 85°F; configurable for other ranges (Default range is 10°C to 35°C; configurable for other ranges)		Zio Plus LCD Wall Module (Temperature & Humidity)

Class 100 (H10) One or Two Phase kWh Meter

The Class 100 kWh meters are fully electronic, low-cost meters for monitoring electrical usage in multi-family, commercial and industrial applications. Monitor anything from a single lighting circuit to an entire building. Ideal for both new and retrofitted facilities. Can be used for tenant monitoring and billing.

- Direct-read 2-line alpha-numeric LCD display without multiplier displays accumulative kWh and “real-time” kW load.
- Available in MMU (Multiple Meter Unit) enclosures containing up to 24 meters in one compact enclosure.
- Revenue-grade accuracy.
- Patented 0-2 volt output split-core current sensors promote enhanced safety and accurate remote mounting of current sensors up to 2,000 feet from meter without power interruption.
- Parallel up to three (3) sets of current sensors for cumulative reading.
- Current sensor installation diagnostics.
- Fixed pulse output.
- Non-volatile Memory.
- Maintains reading in the event of power failure.
- Meter can be used in the following configurations:
  - 1-Phase, 2-Wire
  - 2-Phase, 3-Wire
- Available in Industrial grade JIC steel enclosure (J) or NEMA 4X poly carbonate enclosure (R).
- UL/cUL Listed.
- Revenue Grade Accuracy. Meets or exceeds ANSI C12.20 national accuracy standards. (from 1% to 100% of rated load.)
- All meters must be ordered via fax at 800-356-0149, or e-mailed to “ACSUSTradeOrdersandQuotesOnly@honeywell.com”

Class 100 Selection Guide

Series	Class		Voltage	Current	Enclosure Type		Current Sensors	
H	10	-	2120	25-	J	JIC Steel Enclosure	KIT	Split-core Current Sensors
		-	3208	50-	R	NEMA 4X Enclosure	SCS	Solid-core Current Sensors
		-	2277	100	M	MMU Style Meter		
				200				

Example: H10-212025-JKIT = Class 100 Single Phase 120V 25A Steel Enclosure with 1 Current Sensor
Example: H10-3208100JKIT = Class 100 Single Phase 208V 100A Steel Enclosure with 2 Current Sensors
Please see the MMU Ordering tab for an example showing how to order an MMU panel.

Class 200 (H20) Three Phase kWh Demand Meter

The Class 200 kWh meters are fully electronic, low cost meters for monitoring electrical usage in multifamily, commercial and industrial applications.

- Direct-read 2-line alpha-numeric LCD display without multiplier displays cumulative kWh & “real-time” kW load.
- Demand option displays kW/Demand and kW Peak date and time (15 minute interval standard, 30 and 60 minute intervals available.)
- Patented 0-2 volt output split-core current sensors promote enhanced safety and accurate remote mounting of current sensors up to 2000 feet from meter without power interruption.
- On board installation diagnostics & verification system.
- Parallel up to three (3) sets of current sensors for cumulative reading.
- Meter can be used on the following configurations:
  3-Phase, 4-Wire
  3-Phase, 3-Wire
  2-Phase, 3-Wire
- Fixed-value pulse output.
- Available in both industrial grade JIC steel enclosure and NEMA 4X polycarbonate enclosure.
- Non-volatile Memory.
- UL/CUL Listed.
- Revenue Grade Accuracy. Meets or exceeds ANSI C12.20 national accuracy standards. (from 1% to 100% of rated load.)
- All meters must be ordered via fax at 800-356-0149, or e-mailed to “ACSUSTradeOrdersandQuotesOnly@honeywell.com”

Class 200 and Green Meter Selection Guide

Series	Class		Voltage	Current	Enclosure Type		Options/Current Sensors		Current Sensors		No Sensors	
H	20	-	120	25HV	J	JIC Steel Enclosure	-G-	Green Class Meter	KIT	Split-core Current Sensors	-NS	No Current Sensors Included
		-	208	100-	R	NEMA 4X Enclosure	KIT	No Options, Split Core Sensors	SCS	Solid-core Current Sensors		
		-	480	200-	M	MMU Style Meter	SCS	Solid-core Current Sensors	-NS	No Current Sensors Included		
		-	600	400-			-D-	Demand				
				800-								
				1600								
				3200								

Example: H20-208100-RKIT = Class 200 Three Phase 208/240V 100A NEMA 4X Enclosure with 3 Current Sensors.
Example: H20-2081600R-D-KIT = Class 200 Three Phase 208/240V 1600A NEMA 4X Enclosure, Demand Option, with Three Current Sensors
Please see the MMU Ordering information for an example showing how to order an MMU panel.

Class 320 Communicating Smart Meter

The Class 320 meter is a 3-element meter with communications. The device is used to monitor electric power usage of individual loads after the utility meter and store kW and kVAR data for automatic meter reading.

- Advanced 4-line display showing:
  - kWh
  - kW demand (with peak date & time)
  - Power factor per phase
  - Real-time load in kW
  - Amps per Phase
  - Volts per phase.
- On-board set-up option for:
  - Meter date/time
  - ID codes for communication option
- 0-2 volt output split-core current sensors allow for enhanced safety and accurate remote mounting of sensors up to 500 feet from meter without power interruption.
- Meter is designed for use on both 3-phase, 3-wire (Delta) and 3-phase, 4-wire (Wye) circuits.
- Onboard installation diagnostics and verification system: current sensor installation diagnostics indicator, phase error indicator and phase angle diagnostics on display.
- RS-485 Protocol options:
  - Modbus RTU
  - BACnet MS/TP
  - EZ-7
- Available in MMU (Multiple Meter Unit) enclosures containing up to 24 meters in one compact enclosure.
- When the “M” (MMU) enclosure type is chosen, the MMU should be ordered separately.
- Compatible with E-Mon Energy software via EZ7 protocol or automatic meter reading, energy billing and profiling.
- Built-in RS-485 communication capability supports the following connection configuration combinations not to exceed 52 devices per channel): - Up to 52 Din-Mon D2 & D5, Class 320, 340 or 500 meters and/or IDR interval data recorders. Cabling can be either daisy-chain or star configuration, 3-conductor, 18-22 AWG, up to 4,000 cable feet total per network string.
- Records kWh and kVARh delivered, kWh and kVARh received in first four channels. Data stored in 15-min. for up to 72 days or 5-minute intervals for up to 24 days. Maintains data in a first-in, first-out format.
- Enclosure: Type 4X polycarbonate enclosure for outdoor/ indoor installation and type 1 heavy duty JIC steel enclosure for indoor installation.
- UL/CUL Listed. Revenue Grade Accuracy. Meets or exceeds ANSI C12.20 national accuracy standards. (from 1% to 100% of rated load).
- Non-volatile memory to maintain reading during power outages.
- All meters must be ordered via fax at 800-356-0149, or e-mailed to “ACSUSTradeOrdersandQuotesOnly@honeywell.com”

Class 320 Meter Selection Guide

Series	Class		Voltage	Current	Enclosure Type	Protocol	Options/Current Sensors	No Current Sensors
H	32	-	120	25HV	J JIC Steel Enclosure	RTU Modbus RTU	KIT Split-core Current Sensors	-NS No Current Sensors Included
		-	208	100-	R NEMA 4X Enclosure	EZ7 EZ-7	-SP Single Phase or Two Phase (Two Element)	
		-	400	200-	M MMU Style Meter	BAC BACnet MS/TP	SCS Solid-core Current Sensors	
		-	480	400-				
		-	600	800-				
				1600				
				3200				

Example: H32-480400-JRTUKIT = Class 32 Three-Phase 480V 400A Steel Enclosure, Modbus RTU, Three Current Sensors
Example: H32-480400-JRTUKIT-NS = Class 32 Three-Phase 480V 400A Steel Enclosure, Modbus RTU, Zero Current Sensors
Example: H32-4801600MEZ7KIT = Class 32 Three-Phase, 480V 1600A MMU Enclosure, RS-485 EZ-7, Three current Sensors
Please see the MMU Ordering information for an example showing how to order an MMU panel.

MMU (Multiple Meter Unit) Cabinet Ordering Information

- Available in configurations containing up to 8, 16, or 24 meters.
- MMU cabinets are available for H10*, H20, and H32 meters and HIDRs.
- Compact installation of multiple meters allows for easy and centralized reading.
- IDRs (Interval Data Recorders) can be factory installed inside the MMU enclosures along with the meters allowing for easy interface to the E-Mon Energy software system. (IDRs are mounted on the back wall of the enclosure.)
- Three-phase MMU cabinets come with pre-wired voltage feeds. If IDR(s) are installed inside MMU cabinets, the connections from the meters to the IDR are also pre-wired at the factory.
- MMU cabinets may contain meters of different voltage configurations. (i.e. 208V & 480V meters inside a single MMU enclosure.)
- All meters must be ordered via fax at 800-356-0149, or e-mailed to "ACSUSTradeOrdersandQuotesOnly@honeywell.com"

MMU (Multiple Meter Unit) Cabinet Ordering Information

Set the grouping under delivery tab to "1" for all the MMU items, cabinet, meters, and blanks.

Add slot number on VC screen for meters. Add text all for MMU-blank

NOTE: MMUs should be ordered as shown in the example on the below, with meters and blanks directly following the HMMU part, so that the factory knows exactly what is needed in each MMU panel.

MMU units are available for H10, H20, and H32 meters and HIDRs.

Please specify the meter configuration in the MMU using the form 62-0460, and fax this in with the order. When ordering meters less than the capacity of the MMU, please fill up the difference with the 'MMU-BLANK' spaces. For example, if you buy 6 meters for HMMU-8, you need 2 MMU-Blank spaces (8-6=2).

MMU (Multi Meter Unit) Parts

Part number	Description
HMMU-8	MMU-8 CABINET/ENCLOSURE for 8 meters
HMMU-16	MMU-16 CABINET/ENCLOSURE for 16 meters
HMMU-24	MMU-24 CABINET/ENCLOSURE for 24 meters
MMU-BLANK	MULTIPLE METER UNIT BLANK SPACE

MMU order example:

	Part	Qty
line 1	HMMU-8	1
line 2	H32-4801600MEZ7KIT	1
line 3	H32-4801600MEZ7KIT	1
line 4	H32-4801600MEZ7KIT	1
line 5	H32-480400-MEZ7KIT	1
line 6	H32-480400-MEZ7KIT	1
line 7	H32-480400-MEZ7KIT	1
line 8	MMU-BLANK	1
line 9	MMU-BLANK	1

Meters and blanks must add up to # of slots in MMU, in this case 8
Each meter and Each blank must be on their own line

Material Number	Description	Approximate, Dimensions	Display
HMMU-8	MMU-8 CABINET/ENCLOSURE for 8 meters	24 in. H x 12 in. W x 7 in. D (610 mm H x 305 mm W x 178 mm D)	Meter Configuration: 2 across, 4 down
HMMU-16	MMU-16 CABINET/ENCLOSURE for 16 meters	24 in. H x 20 in. W x 7 in. D (610 mm H x 508 mm W x 178 mm D)	Meter Configuration: 4 across, 4 down
HMMU-24	MMU-24 CABINET/ENCLOSURE for 24 meters	30 in. H x 24 in. W x 7 in. D (762 mm H x 610 mm W x 178 mm D)	Meter Configuration: 5 across, 5 down
MMU-BLANK	Blank for multiple meter cabinet	7 1/4 in. H x 7 in. W x 3 1/4 in. D (184.1 mm H x 178 mm W x 82.55 mm D)	

Class 340 (H34) Dual Protocol Smart Meter

- Standard features Include advanced 4-line large display showing:
  - kWh
  - kW demand (with peak date & time)
  - Power factor per phase
  - Real-time load in kW
  - Amps per Phase
  - Volts per phase
  - On-board set-up option for:
  - IP address
  - Meter date/time
  - Load Control Settings
  - ID codes for EZ7, Modbus and BACnet
- Optional expanded feature package provides additional features:
  - Load control option for load control/shedding
  - Two external meter inputs (water, gas, BTU, etc.) (stored in channels 5 & 6)
  - Two Pulse outputs (one kWh and one kVARh)
- 0-2 volt output split-core current sensors allow for enhanced safety and accurate remote mounting of sensors up to 500 feet from meter without power interruption. (Optional solid-core sensors available.)
- On-board installation diagnostics and verification system.
- Built-in RS-485 communications capability supports the following connection configurations (or combinations not to exceed 52 devices per channel):
  - Up to 52 Din-Mon D2 & D5, Class 320, 340 or 500 meters and/or IDR interval data recorders
  - Cabling is daisy-chain configuration, 3-conductor, 18-22 AWG, up to 4,000 cable feet total per channel.
- Communications
  - Built-in communication
    - RS-485
    - Ethernet
    - Pulse output
    - Optional telephone modem
- Protocols
  - Modbus RTU
  - Modbus TCP/IP
  - BACnet MS/TP*
  - BACnet IP*
  - LonWorks FT-10 (Twisted Pair)*
  - EZ7
  - EZ7 Ethernet
- Records kWh & kVARh delivered, kWh & kVARh received in first four channels. Data stored in 15-min. intervals for up to 72 days or 5-minute intervals for up to 24 days. Maintains interval data storage in a first-in, first-out format.
- Compatible with E-Mon Energy software via EZ7 protocol for automatic meter reading, billing & profiling of interval energy data.
- Meter is designed for use on both 3-phase, 3-wire (delta) and 3-phase, 4-wire (wye) circuits. Optional single-phase, 3-wire configuration available.
- Outdoor NEMA 4X polycarbonate enclosure (standard) with padlocking hasp & mounting flanges for indoor/outdoor installation (stand alone) with one 1 1/16” KO on bottom of enclosure.
- Optional industrial grade JIC steel enclosure w/padlocking hasp & mounting flanges for indoor installation with three 1 1/16" KO (3/4" conduit) on bottom of enclosure.
- UL/CUL listed. Certified by Independent Test Lab to meet or exceed ANSI C12.20 national accuracy standards. (from 1% to 100% of rated load)
- Meter meets or exceeds MID accuracy standards.
- BACnet protocol is BTL certified. LonWorks protocol is LonMark certified.

* *Interval data not available via BACnet or LonWorks.*

Warranted for a period of five (5) years following the date of manufacture when installed in accordance with manufacturer’s instructions by qualified personnel.

Class 340 Meter Selection Guide

Series	Class		Voltage	Current	Enclosure Type	Protocol	Options/Current Sensors	Current Sensors
H	34	-	120	25HV	J JIC Steel Enclosure	01 EZ-7, EZ-7 ETHERNET	KIT No Options, Split Core Sensors	KIT Split-core Current Sensors
		-	208	100-	R NEMA 4X Enclosure	02 MODBUS RTU, EZ-7 ETHERNET	SCS No Options, Solid Core Sensors	SCS Solid Core Sensors
		-	400	200-		03 BACNET MS/TP, EZ-7 ETHERNET	-X- Expanded Feature Pack	-NS No Current Sensors Included
		-	480	400-		04 EZ-7, MODBUS TCP/IP	-SP Single Phase Or Two Phase (Two Element)	
		-	600	800-		05 EZ-7, BACNET IP	XSP Expanded Feature Pack, Single Phase	
				1600		06 MODBUS RTU, MODBUS TCP/IP		
				3200		07 LONWORKS TP, EZ-7 ETHERNET		
						08 LONWORKS TP, MODBUS TCP/ IP		
						09 EZ-7, EZ-7 ETHERNET WITH MODEM		
						10 EZ-7, MODBUS TCP/IP WITH MODEM		
						11 EZ-7, BACNET IP WITH MODEM		

Example: H34-480400-J05KIT = Class 340 Three-Phase 480V 400A Steel Enclosure, BACnet IP and RS-485 EZ-7 with Three Current Sensors
Example: H34-480400-J01-X-KIT = Class 340 480V 400A Steel Enclosure, Ethernet EZ-7 and RS-485 EZ-7, Expanded Feature Pack, with Three Current Sensors
Example: H34-480400-J01-X-KIT-NS = Class 340 480V 400A Steel Enclosure, Ethernet EZ-7 and RS-485 EZ-7, Expanded Feature Pack with Zero Current Sensors

Class 500 Dual Protocol Smart Meter

The Class 500 Meter is a 3-element meter with dual protocol communications. The device is used to monitor electric power usage of individual loads after the utility meter and store kW and kVAR data for automatic meter reading. Installation must only be performed by qualified personnel and in accordance with these instructions and all applicable local and national electrical codes.

- Advanced 4-line display showing:
  - kWh
  - kW demand (with peak date & time)
  - Power factor per phase
  - Real-time load in kW
  - Amps per Phase
  - Volts per phase.
- On-board set-up option for:
  - IP address
  - Meter date/time
  - ID codes for EZ7
  - Modbus and BACnet.
- 0-2 volt output split-core current sensors allow for enhanced safety and accurate remote mounting of sensors up to 500 feet from meter without power interruption.
- Onboard installation diagnostics and verification system: current sensor installation diagnostics indicator, phase error indicator and phase angle diagnostics on display.
- Optional 5th & 6th channel available for two external meter inputs (gas, water, BTU, etc.) on Modbus, BACnet, and LonWorks (only one channel is available with EZ-7 protocol). Both channels provide interval data logging that can be read via E-Mon Energy software.
- Communication options/protocols:
  - Built in RS-485: BACnet MS/TP, Modbus RTU, Lon Twisted Pair, EZ-7
  - Built in Ethernet: BACnet IP, Modbus TCP/IP, EZ-7 Ethernet.
- Compatible with E-Mon Energy software via EZ7 protocol for automatic meter reading, energy billing and profiling (applicable communication options: 02, 03, 05, and 07).
- Phase loss alarm (N.O. Contact).
- Built-in RS-485 communication capability supports the following connection configurations (or combinations not to exceed 52 devices per channel): - Up to 52 Class 500 meters and/or IDR interval data recorders. Cabling can be either daisy-chain or star configuration through RJ-11 modular jack (4-conductor) or terminal block (3-conductor), 18-26 AWG, up to 4,000 cable feet total.
- For EZ-7 meters, records kWh and kVARh delivered, kWh and kVARh received in first four channels. Data stored in 15-min. for up to 72 days or 5-minute intervals for up to 24 days. Maintains data in a first-in, first-out format.
- Meter operates as slave device when used with Modbus or LONworks options. Meter works as a master device on BACnet MS/TP.
- Enclosure: Type 4X polycarbonate enclosure for outdoor/ indoor installation and type 1 heavy duty JIC steel enclosure for indoor installation.
- UL/CUL Listed. Certified by independent test lab to meet or exceed ANSI C12.20 national accuracy standards. (from 1% to 100% of rated load).
- Non-volatile memory to maintain reading during power outages.
- Meter data points
  - Energy delivered
  - Reactive Energy delivered
  - Energy Received
  - Real Power
  - Reactive Power
  - Apparent power
  - Power factor
  - Current total
  - Current average
  - Voltage line
  - Frequency
  - Phase angle
  - Real power for each phase
  - Reactive power for each phase
  - Apparent power for each phase
  - Power factor for each phase
  - Current for each phase
  - Voltage for each phase
  - Phase angle for each phase
  - External input 1 (optional)
  - External input 2 (optional)
- All meters must be ordered via fax at 800-356-0149, or e-mailed to "ACSUSTradeOrdersandQuotesOnly@honeywell.com"

Class 500 Meter Selection Guide

Series	Class		Voltage	Current	Enclosure Type	Protocol	Options/Current Sensors	Current Sensors
H	50	-	120	25HV	J JIC Steel Enclosure	01 EZ-7, EZ-7 ETHERNET (Green Net Meters only)	KIT No Options, Split Core Sensors	KIT Split-core Current Sensors
		-	208	100-	R NEMA 4X Enclosure	02 MODBUS RTU, EZ-7 ETHERNET	SCS No Options, Solid Core Sensors	SCS Solid Core Sensors
		-	400	200-		03 BACNET MS/TP, EZ-7 ETHERNET	-N- Green Class Net Meter	-NS No Current Sensors Included
		-	480	400-		04 EZ-7, MODBUS TCP/IP	-SP Single Phase Or Two Phase (Two Element)	
		-	600	800-		05 EZ-7, BACNET IP	NSP Green Net, Single Phase	
				1600		06 MODBUS RTU, MODBUS TCP/IP		
				3200		07 LONWORKS TP, EZ-7 ETHERNET		
						08 LONWORKS TP, MODBUS TCP/ IP		
						09 EZ-7, EZ-7 ETHERNET WITH MODEM		
						10 EZ-7, MODBUS TCP/IP WITH MODEM		
						11 EZ-7, BACNET IP WITH MODEM		

Example: H50-480400-J05KIT = Class 500 Three-Phase 480V 400A Steel Enclosure, BACnet IP and RS-485 EZ-7 with Three Current Sensors
Example: H50-480400-J01-N-KIT = Class 500 Three-Phase Green Net, 480V 400A Steel Enclosure, Ethernet EZ-7 and RS-485 EZ-7, with Three Current Sensors
Example: H50-480400-J01-N-KIT-NS = Class 500 Three-Phase Green Net, 480V 400A Steel Enclosure, Ethernet EZ-7 and RS-485 EZ-7, with Zero Current Sensors

Interval Data Recorder

The Interval Data Recorder (IDR) is an energy data collection device.

- Advanced 4-line display showing:
  - kWh
  - Real-time load
- On-board set-up option for:
  - IP address
  - Date/time
  - ID codes for EZ7, Modbus and BACnet
- Standard IDR (RJ Jacks) reads & records up to 8 or 16 H-Series class 100/200 meters (pulse input). (3rd party meters don't work with RJ jacks.)
- IDR-ST (screw terminal) model can accept contact closure type pulse inputs from other types of meters (water, gas, BTU, steam, etc.). The ST option is available only on HIDR-8 models.
- Built-in RS-485 communications capability supports the following connection configurations (or combinations not to exceed 52 devices per channel):
  - Up to 52 Din-Mon D2 & D5, Class 320, 340 or 500 meters and/or IDR interval data recorders
  - Cabling can be either daisy-chain or star configuration, 3-conductor, 18-22 AWG, up to 4,000 cable feet total per channel.
- Built-in communications
  - RS-485
  - Ethernet
  - Optional telephone modem
- Protocols
  - Modbus RTU
  - Modbus TCP/IP
  - BACnet MS/TP
  - BACnet IP
  - EZ7
- Data stored for 55 days at 5-min. intervals and 165 days at 15-min. intervals. (When connected to E-mon Energy software, data can be retrieved for 72 days at 15-min. intervals and 24 days at 5-min. intervals).
- Reads usage and reads demand in 15, 30 or 60-minute kW periods.
- 120V power supply required and included with all IDR's.
- Maintains data in case of power outage.
- Industrial-grade JIC steel enclosure with padlocking hasp and mounting flanges and three 1 1/16 knockouts (3/4" conduit) on bottom of enclosure (stand-alone IDR's only).
- All meters must be ordered via fax at 800-356-0149, or e-mailed to "ACSUSTradeOrdersandQuotesOnly@honeywell.com"

Interval Data Recorder Selection Guide

Class	# of Meters	Enclosure Type	Protocol	Connection
HIDR-	8-	J JIC Steel Enclosure	01 EZ-7, EZ-7 ETHERNET	ST Screw Terminal Connections (only available for HIDR-8 models)
	16	M MMU Style Meter	02 Modbus RTU, EZ-7 ETHERNET	RJ RJ Connections
			03 BACNET MS/TP, EZ-7 ETHERNET	
			04 EZ-7, Modbus TCP/IP	
			05 EZ-7, BACNET IP	
			06 Modbus RTU, Modbus TCP/IP	
			09 EZ-7, EZ-7 Ethernet With Modem	
			10 EZ-7, Modbus TCP/IP with modem	
			11 EZ-7, BACNET IP with modem	

Example: HIDR-8-J05ST = IDR for 8 meters, Steel enclosure, EZ-7 RS-485 and EZ-7 Ethernet with Screw Terminal connection option
Example: HIDR-16J02RJ = IDR for 16 meters, Steel enclosure, Modbus RTU and EZ-7 Ethernet with RJ connection option
Please see the MMU Ordering information for an example showing how to order an MMU panel.

Din-Mon (HD2 or HD5) Submeters

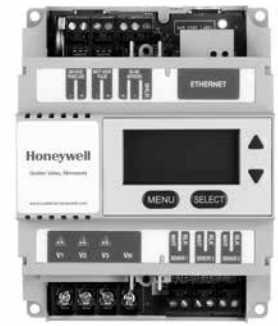

Din-Mon™ D2 and D5 configurations are now available. Typical applications include energy-efficiency monitoring of HVAC equipment and other building electrical systems, single-phase transformers and more. There are two basic configurations:

Din-Mon D2

- RS-485 Communication
  - BACnet MS/TP (BTL Testing Certified)
  - Modbus RTU
  - E-Mon Energy EZ7

Din-Mon D5

- Dual-protocol functionality
  - RS-485/Ethernet or RS-485/LonWorks
  - MODBUS TCP/IP
  - BACNET IP
  - LonWorks TP/FT-10

Measuring just 5.5” (139.7mm) H x 4.3” (109.2mm) W x 2.3” (58.4mm) D, the compact Din-Mon is ideally suited for internal mounting in building automation systems, switchgear, control panels, server racks, renewable energy systems and other space-constrained energy monitoring applications. Din-Mon is also wall mount capable.

38 points of data including kWh & kW (with peak date and time), Power factor per phase, real-time load in kW, Amps per phase and Volts per phase.

Meter is designed for use on both 3-phase, 3-wire (delta) and 3-phase, 4-wire (wye) circuits. Optional 1- and 2-element configurations are available.

Two customer configurable pulse outputs: - Watt-hour and VAR-hour pulse outputs - Watt-hour and phase loss (N.O. Contact)

Din-Mon™ Current Sensors

- Split-core current sensors: 0.333V standard, 100mA optional; solid-core 0.333V and 100mA, optional.
- The standard meter kit for either configuration comes with 0.333V split-core current sensors, but 0-100mA output current sensors and solid-core sensors are optionally available.
- Fully Encapsulated
- Split Core Sensors available in the following amperages: 100A, 200A, 400A, and 800A.
- Solid Core Sensors available in the following amperages: 100A and 200A.
- Note: These current sensors cannot be used with any other Honeywell Submeter products.

Warranted for a period of five (5) years following the date of manufacture when installed in accordance with manufacturer’s instructions by qualified personnel.

Class D2 Meter Selection Guide

Series	Class		Voltage	Current	Enclosure Type	Protocol	Current Sensor Type	Configuration-Phases	Current Sensor Output	Current Sensor Qty
H	D2	-	208	100-	S Standard Enclosure	RTU Modbus RTU	SPL Split-core Sensor	1- Single Phase	V3 0.333V Output	KIT1 1 Current Sensor Included
		-	400	200-		EZ7 EZ-7	SCS Solid-core Sensor	2- Two Phases	C1 100MA Output	KIT2 2 Current Sensors Included
		-	480	400-		BAC BACNET MS/TP		3- Three Phases		KIT3 3 Current Sensors Included
		-	600	800-						-NS No Current Sensors Included

Example: HD2-208200-SRTUSPL3-V3KIT3 = Class D2 208V 200A Standard Enclosure, Modbus RTU, Three Phase, Three Voltage Output Current Sensors
Example: HD2-480800-SEZ7SPL1-C1KIT1 = Class D2 480V 800A Standard Enclosure, EZ7, Single Phase, One Current Output Current Sensor

Class D5 Meter Selection Guide

Series	Class		Voltage	Current	Enclosure Type	Protocol	Current Sensor Type	Configuration-Phases	Current Sensor Output	Current Sensor Qty
H	D5	-	208	100-	S Standard Enclosure	01 EZ-7, EZ-7 Ethernet	SPL Split-core Sensor	1- Single Phase	V3 0.333V Output	KIT1 1 Current Sensor Included
		-	400	200-		02 Modbus RTU, EZ-7 Ethernet	SCS Solid-core Sensor	2- Two Phases	C1 100MA Output	KIT2 2 Current Sensors Included
		-	480	400-		03 BACNET MS/TP, EZ-7 Ethernet		3- Three Phases		KIT3 3 Current Sensors Included
		-	600	800-		04 EZ-7, Modbus TCP/IP				-NS No Current Sensors Included
						05 EZ-7, BACNET IP				
						06 Modbus RTU, Modbus TCP/IP				
						12 EZ-7, Lonworks TP/FT-10				

Example: HD5-208200-S01SPL3-V3KIT3 = Class D5 208V 200A Standard Enclosure, EZ7 / EZ7, Three Phase, Three Voltage Output Current Sensors
Example: HD5-480800-S06SPL1-C1KIT1 = Class D5 480V 800A Standard Enclosure, Modbus / Modbus, Single Phase, One Current Output Current Sensor

Energy Software

Material Number	Description	Application
SUB-ENERGY50	1-50 Meters Emon Energy Software and Start-Up	1-50 meters with E-Mon Energy software and start-up
SUB-ENERGY100	E-Mon Energy software operates with computers running Windows 2000, XP, Vista or 7.	51-100 meters with E-mon Energy Software and start-up
SUB-ENERGY250	E-Mon Energy software operates with computers running Windows 2000, XP, Vista or 7.	101-250 meters with E-mon Energy software and start-up

Meter Options, Enclosures and Accessories

Material Number	Description	Application	
SUB-EKME	Connects AMR system to host computer via Ethernet for reading meters with E-Mon Energy software (Converts RS-485 to 10Mbps Ethernet for connection to an Ethernet network)	EKM-E - ETHERNET KEY/MODEM	
SUB-EKMT	Converts RS-485 to RS-232 for input into computer serial port	EKM-T - TELEPHONE KEY/MODEM	
SUB-EZ7	EZ-7 Driver	EZ-7 Driver	
SUB-P3	Operating range of 1.5 to 36 volts AC or DC, Real time demand reading	Pulse Output for Interface to energy management system or building management system	
SUB-RS232K	Connects AMR system to host computer for reading meters with E-Mon Energy software (Supports up to 52 IDR units)	Additional RS-232 Communication Key	
SUB-USBK	Converts RS-485 to USB for input into computer USB port for reading meters with E-Mon Energy software.	USB Communication Key	

Split Core Sensors

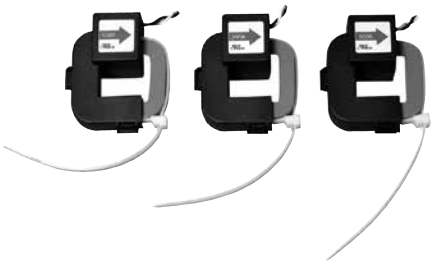

Split-core current sensors are supplied with Honeywell Class 100, 200, 320, 340 and 500 meters.

- Current sensors can be installed up to 2000 feet away from meter. Leads supplied are 3' in length and can be extended up to 2000 feet using low voltage #14-22 AWG wire. (stranded/twisted not required) See local electrical codes for proper sizing.
- When paralleling current sensors, the meter reading must be multiplied by the number of sets of current sensors in parallel (a maximum of 3 sets of sensors can be installed in parallel).

Material Number	Description	Application	Approximate, Dimensions	Current Sensor Rating (A)
SUB-CS25	Current sensors can be installed up to 2000 feet away from meter	Set of 3 25A Split-core Current sensor	Interior Dim: 7/8" x 1 1/2" / Exterior Dim: 3 1/8" H x 3 3/4" W x 1 3/8" D (Interior Dim: 22.2 mm x 38 mm / Exterior Dim: 79.4 mm H x 95.25 mm W x 34.93 mm D)	25A
SUB-CS50	Current sensors can be installed up to 2000 feet away from meter	Set of 3 50A Split-Core Current sensor	Interior Dim: 7/8" x 1 1/2" / Exterior Dim: 3 1/8" H x 3 3/4" W x 1 3/8" D (Interior Dim: 22.2 mm x 38 mm / Exterior Dim: 79.4 mm H x 95.25 mm W x 34.93 mm D)	50A
SUB-CS100	Current sensors can be installed up to 2000 feet away from meter	Set of 3 100A Split-core Current sensor	Interior Dim: 7/8" x 1 1/2" / Exterior Dim: 3 1/8" H x 3 3/4" W x 1 3/8" D (Interior Dim: 22.2 mm x 38 mm / Exterior Dim: 79.4 mm H x 95.25 mm W x 34.93 mm D)	100A
SUB-CS200	Current sensors can be installed up to 2000 feet away from meter	Set of 3 200A Split-core Current sensor	Interior Dim: 7/8" x 1 1/2" / Exterior Dim: 3 1/8" H x 3 3/4" W x 1 3/8" D (Interior Dim: 22.2 mm x 38 mm / Exterior Dim: 79.4 mm H x 95.25 mm W x 34.93 mm D)	200A
SUB-CS400	Current sensors can be installed up to 2000 feet away from meter	Set of 3 400A Split-Core Current sensor	Interior Dim: 1 1/2" x 2 3/4" / Exterior Dim: 4 3/8" H x 3 3/4" W x 1 3/8" D (Interior Dim: 38 mm x 14.3 mm / Exterior Dim: 111 mm x 95.25 mm x 34.93 mm D)	400A
SUB-CS800	Current sensors can be installed up to 2000 feet away from meter	Set of 3 800A Split-core Current sensor	Interior Dim: 3 1/4" x 4 1/2" / Exterior Dim: 5 3/4" H x 5 3/8" W x 1 3/8" D (Interior Dim: 101.6 mm x 114.3 mm/ Exterior Dim: 146 mm x 136.5 mm x 34.93 mm D)	800A
SUB-CS1600	Current sensors can be installed up to 2000 feet away from meter	Set of 3 1600A Split-Core Current sensor	Interior Dim: 3 1/4" x 4 1/2" / Exterior Dim: 5 3/4" H x 5 3/8" W x 1 3/8" D (Interior Dim: 82.55 mm x 114.3 mm / Exterior Dim: 146 mm x 136.5 mm x 34.93 mm D)	1600A
SUB-CS3200	Current sensors can be installed up to 2000 feet away from meter	Set of 3 3200A Split-Core Current sensor	Interior Dim: 5 7/16" x 7 7/8"/ Exterior Dim: 9 1/4"H x 7 7/8" W x 1 3/8"D (Interior Dim: 138.1 mm x 200 mm/ Exterior Dim: 234.95 x 200 mm x 34.93 mm D)	3200A

Solid and Split Core Current Transmitters

Depending on the model, current is converted into a linear and proportional output signal of 0-5 Vdc, 0-10 Vdc or 4-20 mA and monitored by a building management controller. Use these current sensors in load trending (current monitoring) applications.

- Solid or split core loop-powered current transmitters for 4-20 mA models
- Solid or split core 0-5 or 0-10 Vdc models
- Fast response time
- Integral DIN rail mounting flange
- Easy wiring, polarity sensitive output
- Accepts up to a 350 MCM (17.3 mm) cable
- Operates up to 250 continuous amps
- True RMS versions are available
- RoHS and WEEE Complaint
- Limited 5 Year Warranty

Supply Current: 36 mA max
Jumper Settings: Low; Middle; High
Isolation Voltage: 2200 Vac
Aperture Size: 3/4 in. (19 mm). Accepts up to 350 MCM (17.3 mm) cables.
Operating Humidity Range (% RH): 0 to 95% RH, non-condensing
Operating Temperature Range: 5°F to 104°F (-15°C to 40°C)
Approximate, Dimensions: Split Core-2 45/64 in. high x 3 21/64 in. wide x 1 5/64 in. deep; Solid Core-2 17/64 in. high x 3 3/8 in. wide x 63/64 in. deep (Split Core-69 mm high x 85 mm wide x 25 mm deep; Solid Core-58 mm high x 86 mm wide x 25 mm deep)

Weight: Split Core-0.24 lb; Solid Core-0.22 lb (Split Core-0.11 kg; Solid Core-0.10)
Approvals, CE: Approved
Approvals, Underwriters Laboratories Inc.: Approved
Approvals, Environmental Compliance: RoHS-Directive 2002/95/EC, WEEE-Directive 2002/96/EC
DIN Rail Size: 1-3/8 in. (35 mm)
Type: Adjustable
Enclosure Rating/Color: UL94-5V/Burgundy

Material Number	Application	Core Type	Supply Voltage	Output Switch Rating	Maximum Load Resistance	Response Time	Accuracy	Current Ratings	Maximum Current	Frequency
CTP-20-050-VFD-001	Retrofit or existing installations requiring load trending (current monitoring)	Split	12 to 30 Vdc	4-20 mA Average True RMS	650 Ohms @ 24 Vdc (Vs-10)/0.02-40.2	<200 mS	±0.5%	0-10 Amps; 0-20 Amps; 0-50 Amps	continuous – 60 Amps 100 Am\ps; 160 Amps: for 6 seconds – 80 Amps 200 Amps 300 Amps	30 Hz to 1 kHz
CTP-20-200-AVG-001	Retrofit or existing installations requiring load trending (current monitoring)	Split	12 to 30 Vdc	4-20 mA Average	700 Ohms @ 24 Vdc (Vs-9)/0.02-40.2	<75 mS	±0.5%	0-100 Amps; 0-150 Amps; 0-200 Amps	continuous – 135 Amps 180 Amps 250 Amps: for 6 seconds – 200 Amps 300 Amps 400 Amps	30 Hz to 1 kHz
CTS-05-050-VDC-001	New installations requiring load treading (current monitoring)	Solid	Induced from monitored conductor	0 to 5 Vdc		<100 mS	±1.0% (2 to 100% FSO)	0-10 Amps; 0-20 Amps; 0-50 Amps	continuous – 100 Amps 150 Amps 200 Amps: for 6 seconds – 125 Amps 225 Amps 300 Amps	50 Hz to 60 Hz
CTS-10-250-VDC-001	New installations requiring load treading (current monitoring)	Solid	Induced from monitored conductor	0 to 10 Vdc		<100 mS	±1.0% (5 to 100% FSO)	0-100 Amps; 0-200 Amps; 0-250 Amps	continuous – 160 Amps 320 Amps 400 Amps: for 6 seconds – 200 Amps 400 Amps 500 Amps	50 Hz to 60 Hz
CTS-20-250-AVG-001	New installations requiring load treading (current monitoring)	Solid	12 to 30 Vdc	4-20 mA Average	700 Ohms @ 24 Vdc (Vs-9)/0.02-40.2	<75 mS	±0.5%	0-100 Amps; 0-200 Amps; 0-250 Amps	continuous – 200 Amps 360 Amps 400 Amps: for 6 seconds – 250 Amps 450 Amps 500 Amps	30 Hz to 1 kHz
CTS-20-250-VFD-001	New installations requiring load treading (current monitoring)	Solid	12 to 30 Vdc	4-20 mA Average True RMS	650 Ohms @ 24 Vdc (Vs-10)/0.02-40.2	<200 mS	±0.5%	0-100 Amps; 0-200 Amps; 0-250 Amps	continuous – 160 Amps 320 Amps 400 Amps: for 6 seconds – 200 Amps 400 Amps 500 Amps	30 Hz to 1 kHz

CTP Dimensions in inches (millimeters)

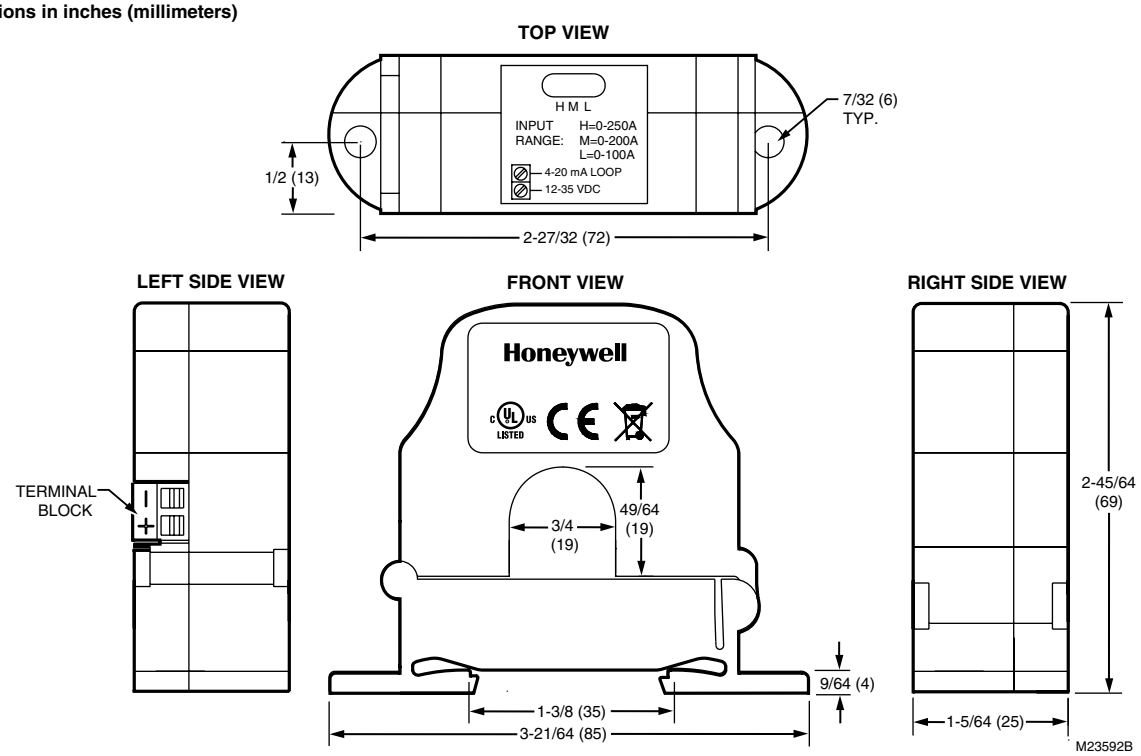

CTS Dimensions in inches (millimeters)

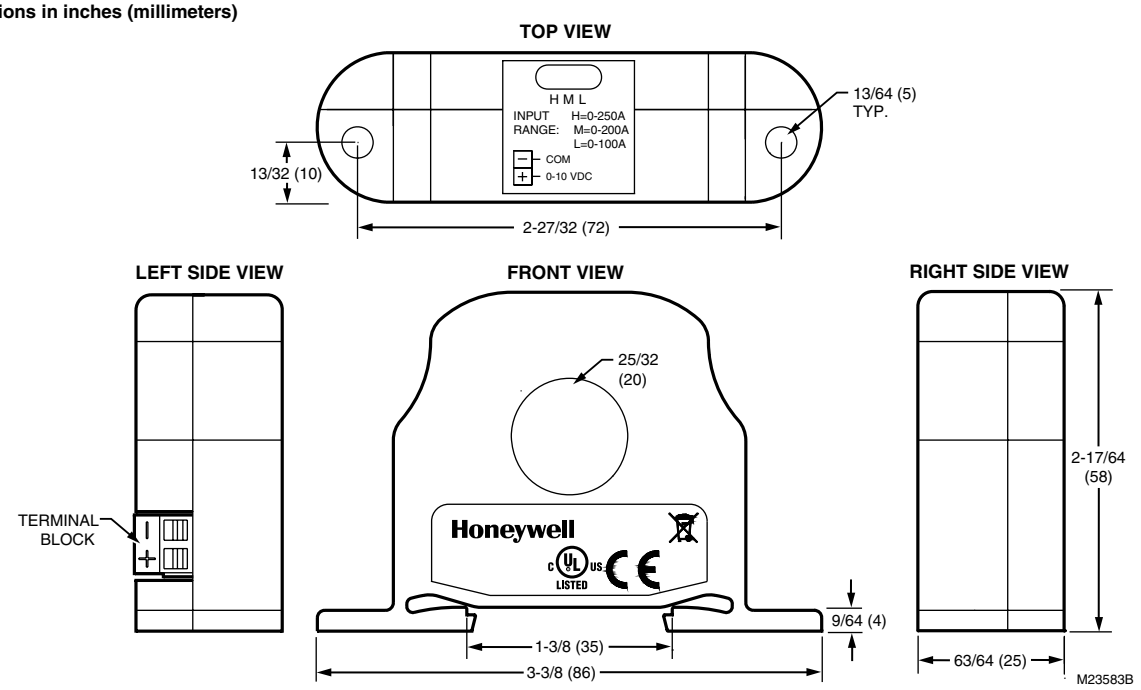

Solid and Split Core Current Switches

The split core current switches are ideal for retrofit or existing installations, since it is not necessary to power down or disconnect any wires during installation. The sensors have solid-state output with adjustable or fixed trip point (setpoint).

- Solid or split core switches with fixed or adjustable trip points
- Very low operating trip points
- LED status indication
- Integral DIN rail mounting flange
- Accepts up to a 350 MCM (17.3 mm) cable
- Operates up to 250 continuous amps
- RoHS and WEEE Compliant
- Limited 5 year warranty.

Application: Monitoring fans, pumps, motors, compressors, or other electrical equipment
Supply Voltage: Induced from monitored conductor
Frequency: 40 Hz to 1 kHz
Isolation Voltage: 2200 Vac
Aperture Size: 3/4 in. (19 mm). Accepts up to 350 MCM (17.3 mm) cables.
Operating Humidity Range (% RH): 0 to 95% RH, non-condensing
Operating Temperature Range: 5°F to 104°F (-15°C to 40°C)
Approximate, Dimensions: Split Core-2 45/64 in. high x 3 21/64 in. wide x 1 5/64 in. deep; Solid Core-2 17/64 in. high x 3 3/8 in. wide x 63/64 in. deep (Split Core-69 mm high x 85 mm wide x 25 mm deep; Solid Core-58 mm high x 86 mm wide x 25 mm deep)

Weight: Split Core-0.23 lb; Solid Core-0.21 lb (Split Core-0.10 kg; Solid Core-0.09 kg)
Approvals, CE: Approved
Approvals, Underwriters Laboratories Inc.: Approved
Approvals, Environmental Compliance: RoHS-Directive 2002/95/EC, WEEE-Directive 2002/96/EC
Max Sensing Current Voltage: 600 Vac
DIN Rail Size: 1-3/8 in. (35 mm)
Enclosure Rating/Color: UL94-5V/Burgundy

Material Number	Core Type	Maximum Current	Normal Position	Output Switch Rating	Trip Point	LEDs	Operating Range
CSP-C-A200-001/U	Split	continuous – 250 Amps: for 6 seconds – 500 Amps: for 1 second – 1,000 Amps	N.C.	0.15 Amps @ 300 Vac/Vdc	2.5-250 Amps	Green – Below the trip point; Red – Above the trip point	0-250A
CSP-O-A200-001/U	Split	continuous – 200 Amps: for 6 seconds – 400 Amps: for 1 second – 800 Amps	N.O.	0.30 Amps @ 200 Vac/Vdc	2.0-200 Amps	Green – Below the trip point; Red – Above the trip point	0-250A
CSP-O-A300-001/U	Split	continuous – 200 Amps: for 6 seconds – 400 Amps: for 1 second – 800 Amps	N.O.	0.30 Amps @ 200 Vac/Vdc	3.0-200 Amps	Green – Below the trip point; Red – Above the trip point	0-250A
CSP-O-F10-001/U	Split	continuous – 200 Amps: for 6 seconds – 400 Amps: for 1 second – 800 Amps	N.O.	0.30 Amps @ 200 Vac/Vdc	1.50 Amps	Red – Above the trip point	0-200A
CSP-O-F15-001/U	Split	continuous – 200 Amps: for 6 seconds – 400 Amps: for 1 second – 800 Amps	N.O.	0.30 Amps @ 200 Vac/Vdc	2.50 Amps	Red – Above the trip point	0-200A
CSS-C-F1-001/U	Solid	continuous – 250 Amps: for 6 seconds – 500 Amps: for 1 second – 1,000 Amps	N.C.	0.15 Amps @ 300 Vac/Vdc	0.50 Amps	Red – Above the trip point	0-250A
CSS-C-F5-001/U	Solid	continuous – 250 Amps: for 6 seconds – 500 Amps: for 1 second – 1,000 Amps	N.C.	0.15 Amps @ 300 Vac/Vdc	1.00 Amps	Red – Above the trip point	0-250A
CSS-O-A200-001/U	Solid	continuous – 250 Amps: for 6 seconds – 500 Amps: for 1 second – 1,000 Amps	N.O.	0.30 Amps @ 200 Vac/Vdc	0.5-250 Amps	Green – Below the trip point; Red – Above the trip point	0-200A
CSS-O-A300-001/U	Solid	continuous – 250 Amps: for 6 seconds – 500 Amps: for 1 second – 1,000 Amps	N.O.	0.30 Amps @ 200 Vac/Vdc	1.0-250 Amps	Green – Below the trip point; Red – Above the trip point	0-200A
CSS-O-F1-001/U	Solid	continuous – 250 Amps: for 6 seconds – 500 Amps: for 1 second – 1,000 Amps	N.O.	0.30 Amps @ 200 Vac/Vdc	0.20 Amps	Red – Above the trip point	0-250A
CSS-O-F5-001/U	Solid	continuous – 250 Amps: for 6 seconds – 500 Amps: for 1 second – 1,000 Amps	N.O.	0.30 Amps @ 200 Vac/Vdc	0.50 Amps	Red – Above the trip point	0-250A

CSP Dimensions in inches (millimeters)

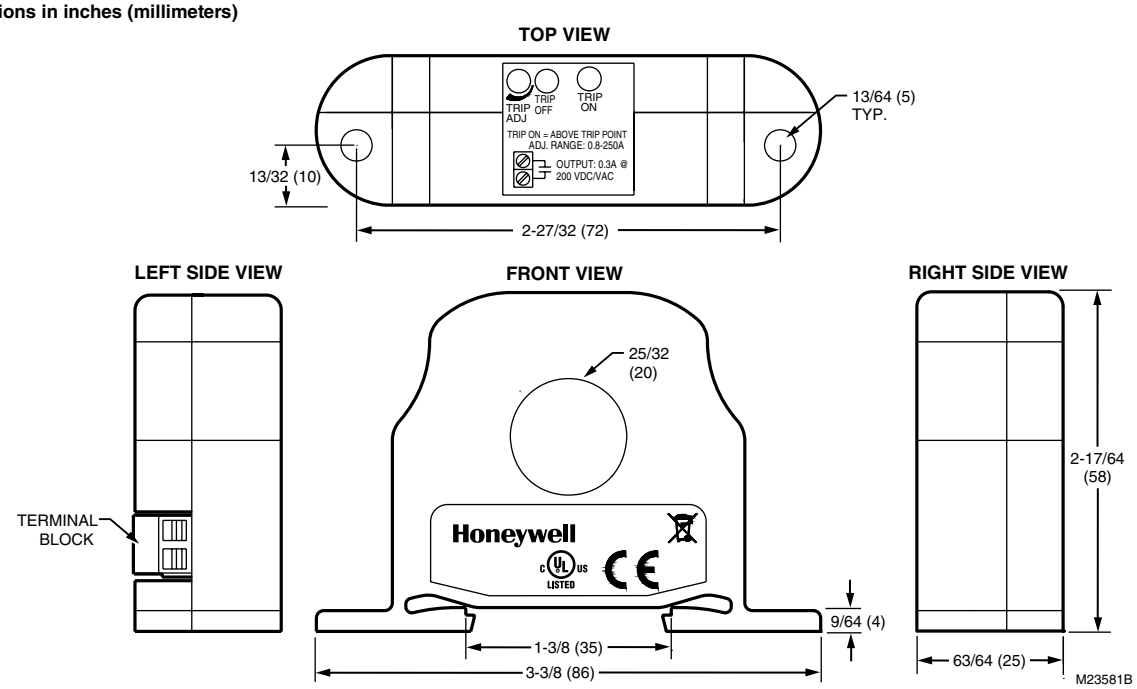

CSS Dimensions in inches (millimeters)

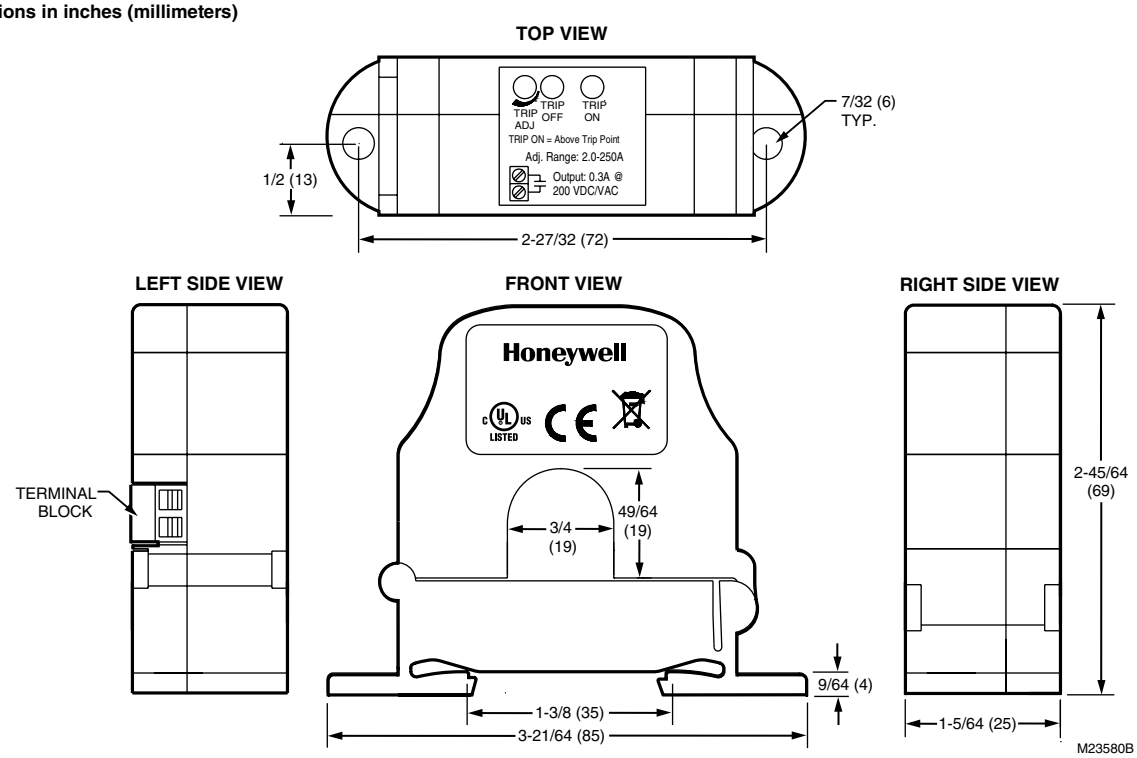

Solid and Split Core Mini Current Switches

The split core current switches are ideal for retrofit or existing installations, since it is not necessary to power down or disconnect any wires during installation. The sensors have solid-state output with adjustable or fixed trip point (setpoint).

- Solid or split core switches with fixed or adjustable trip points
- Very low operating trip points
- LED status indication
- Integral DIN rail mounting flange
- Accepts up to a 350 MCM (17.3 mm) cable
- Operates up to 250 continuous amps
- RoHS and WEEE Compliant
- Limited 5 year warranty.

Application: Monitoring fans, pumps, motors, compressors, or other electrical equipment
Maximum Current: continuous – 158 Amps: for 6 seconds – 240 Amps: for 1 second – 600 Amps
Frequency: 50 Hz; 60 Hz
Normal Position: N. O.
Isolation Voltage: 2200 Vac
Operating Humidity Range (% RH): 0 to 95% RH, non-condensing
Operating Temperature Range: -22°F to 140°F (-30°C to 60°C)

Approximate, Dimensions: Split Core-1.991 in. high x 2.5 in. wide x 0.942 in. deep; Solid Core-2.356 in. high x 2.645 in. wide x 0.94 in. deep (Split Core-51 mm high x 63 mm wide x 24 mm deep; Solid Core-60 mm high x 67 mm wide x 24 mm deep)
Aperture Size: Split Core-0.55" dia., up to 1 AWG cables; Solid Core-0.53" dia., up to 1 AWG cables
Approvals, CE: Approved
Approvals, Underwriters Laboratories Inc.: Approved
Approvals, Environmental Compliance: ROHS-Directive 2011/95/EC
Max Sensing Current Voltage: 600 Vac
Enclosure Rating/Color: UL94-V0/Burgundy

Material Number	Core Type	Output Switch Rating	Trip Point	LEDs	Type
MCSP-A/U	Split	1A Continuous @ 36 VAC/VDC	0.70-150 Amps	Green – Below the trip point Red – Above the trip point	Adjustable
MCSP-F/U	Split	0.5A Continuous @ 36 VAC/VDC	0.55 A		Fixed
MCSS-A/U	Solid	1A Continuous @ 36 VAC/VDC	0.32-150 Amps	Green – Below the trip point Red – Above the trip point	Adjustable
MCSS-F/U	Solid	0.5A Continuous @ 36 VAC/VDC	0.20 A		Fixed

CR Series Command Relays

The CR (Command Relay) Series brings control (start/stop) functionality to your load trending and fan/pump/motor status monitoring applications. Each unit has a Form 1C-SPDT relay which means you have both an N/O and an N/C contact in the same unit. (See Table 1 for output ratings.)

The 35 mm Din-Rail Mounting Flange will allow you to use the CR Series with any Honeywell analog current sensor or switch. This will reduce your inventory by not having to stock as many different items. The stacking feature will also allow you to reduce the required panel space, since up to two CR Series Command Relays may be stacked together during installation.

- 35 mm Din-Rail Mounting Flange
- SPDT Form 1C Relay contacts
- Pilot duty rated
- LED status indication
- Stackable for streamlined installation
- Can be used with any Honeywell analog current sensor or switch

Application: Monitoring fans, pumps, motors, compressors, or other electrical equipment
LEDs: On/Off
Operating Humidity Range (% RH): 0 to 95% RH, non-condensing
Operating Temperature Range: 5°F to 104°F (-15°C to 40°C)
Approximate, Dimensions: 1.632 in. high x 3.29 in. wide x 1.32 in. deep (41.45 mm high x 83.56 mm wide x 33.53 mm deep)

Weight: 0.125 lb (0.057 kg)
Approvals, CE: Approved
Approvals, Underwriters Laboratories Inc.: Approved
Approvals, Environmental Compliance: ROHS-Directive 2011/95/EC
DIN Rail Size: 1-3/8 in. (35 mm)
Enclosure Rating/Color: UL94-5VB/Burgundy

Material Number	Description	Supply Voltage	Output Switch Rating	Current Ratings
CR-115AC-8A/U	8 Amp SPDT Relay, 80-132 VAC Coil Voltage	80 to 132 VAC	8A @ 250 Vac, 8A @ 30 Vdc	8A
CR-12DC-12A/U	12 Amp SPDT Relay, 10-15.6 VDC Coil Voltage	10 to 15.6 VDC	12A @ 250 Vac, 12A @ 30 Vdc	12A
CR-230AC-8A/U	8 Amp SPDT Relay, 165-264 VAC Coil Voltage	165 to 264 VAC	8A @ 250 Vac, 8A @ 30 Vdc	8A
CR-24AC-10A/U	10 Amp SPDT Relay, 16-26.4 VAC Coil Voltage	16 to 26.4 VAC	10A @ 250 Vac, 10A @ 24 Vdc	10A
CR-DC-12A/U	12 Amp SPDT Relay, 20-31.2 VDC Coil Voltage	12 Amp SPDT Relay, 20-31.2 VDC Coil Voltage	12A @ 250 Vac, 12A @ 30 Vdc	12A
CR-DC-5A/U	5 Amp SPDT Relay, 23-31.2 VDC Coil Voltage	23 to 31.2 VDC	5A(NO) / 2A(NC) @ 250 Vac, 5A(NO) / 3A(NC) @ 120 Vac	5A

T4039 Fan Coil Thermostat

Control line voltage valves of a fan coil unit in cooling, manual or automatic changeover heating-cooling systems.

- Directly operate one or two valves.
- Positive deadband separates heating and cooling circuits in automatic models.
- Includes allen wrench for cover and mounting screws.

Display: None
Mounting: 4 in. square outlet box or 2-ganged outlet box
Setting Temperature Range: 55°F to 95°F, marked COOL-WARM (13°C to 35°C, marked COOL-WARM)
Operating Humidity Range (% RH): 5 to 95% RH, non-condensing
Supply Voltage: 120 to 277 Vac
Frequency: 50 Hz; 60 Hz
Electrical Ratings: Fan Switch: 120 Vac: 5.5 AFL, 33.0 ALR; 240 Vac: 2.75 AFL, 16.5 ALR; 277 Vac: 2.4 AFL, 14.4 ALR; Thermostat (Valve load): 120 Vac: 0.32 AFL, 1.0 A ALR; 240 Vac: 0.16 AFL, 0.50 ALR; 277 Vac: 0.14 AFL, 0.43 ALR
Approximate, Dimensions: 4 5/8 in. high x 4 15/16 in. wide x 1 5/16 in. deep (118 mm high x 125 mm wide x 33 mm deep)
Includes: Allen wrench for cover and mounting screws
Approvals, CSA: Certified
Approvals, Underwriters Laboratories Inc.: File No. E34436, Vol 2, dated 3-19-73; Guide No. XAPX

Accessories:
TG511A1000/U – Medium Universal Thermostat Guard with clear cover and base, and opaque wall plate
TG511D1004/U – Medium Universal Thermostat Guard with Beige painted steel cover, opaque ring base and wall plate
TG512A1009/U – Large Universal Thermostat Guard with clear cover and base, and opaque wall plate
TG512D1003/U – Large Universal Thermostat Guard with Beige painted steel cover, opaque ring base and wall plate

Material Number	Application	Switch Positions (System)	Switch Positions (Fan)	Differential Temperature Range	Changeover	Color
T4039B1008/U	Fan coil, cooling only	ON-OFF	HI-MED-LO	Approximately 2°F at midscale (Approximately 1°C at midscale)		Tan
T4039J1026/U	4 pipe fan coil, automatic heat-cool changeover	OFF-HI-LO, Off breaks cooling and fan circuits		The differential from make of one contact to make of the opposite contact is 7°F maximum with a positive deadspot. (The differential from make of one contact to make of the opposite contact is 4°C maximum with a positive deadspot.)	Remote changeover switch is required to separate circuits in manual changeover heating-cooling models.	Tan
T4039M1004/U	4 pipe fan coil, automatic heat-cool changeover	ON-OFF	HI-MED-LO	The differential from make of one contact to make of the opposite contact is 7°F maximum with a positive deadspot. (The differential from make of one contact to make of the opposite contact is 4°C maximum with a positive deadspot.)	Automatic	Tan
T4039M1103/U	4 pipe fan coil, automatic heat-cool changeover	ON-OFF	HI-MED-LO	The differential from make of one contact to make of the opposite contact is 7°F maximum with a positive deadspot. (The differential from make of one contact to make of the opposite contact is 4°C maximum with a positive deadspot.)	Automatic	Premier White®
T4039S1016/U	4 pipe fan coil, manual heat-cool changeover	HEAT-OFF-COOL	HI-MED-LO	The differential from make of one contact to make of the opposite contact is 7°F maximum with a positive deadspot. (The differential from make of one contact to make of the opposite contact is 4°C maximum with a positive deadspot.)	Manual	Tan
T4039S1040/U	4 pipe fan coil, manual heat-cool changeover	HEAT-OFF-COOL	HI-MED-LO	The differential from make of one contact to make of the opposite contact is 7°F maximum with a positive deadspot. (The differential from make of one contact to make of the opposite contact is 4°C maximum with a positive deadspot.)	Manual	Tan

T6069 Fan Coil Thermostat

T6069 thermostats control line voltage valves and/or blower motors on fan coil units in manual changeover heating/cooling systems. The thermostats feature a single System and Fan speed switch.

- Thermostat, system and fan control switches combined in one deluxe-styled unit.
- Available in classic gold or contemporary white styling. Language-free graphic symbols.
- Manual three-speed fan control on most models.
- Suitable for single or double gang electrical boxes.
- Operates one or two valves.
- Has cycled or constant fan control.

Mounting: Mounts on 2 in. x 4 in. (50 mm x 75 mm) single or double-ganged vertically-oriented outlet box.
Supply Voltage: 120 to 277 Vac
Frequency: 50 Hz; 60 Hz
Electrical Ratings: 8.0 AFL / 48 ALR / 13A resistive @ 120 Vac; 4.4 AFL / 26.4 ALR / 7.5A resistive @208 Vac; 4.0 AFL / 24 ALR / 6.5A resistive @ 240 Vac; 3.3 AFL / 19.8 ALR 5.5A resistive @ 277 Vac
Approximate, Dimensions: 4 5/8 in. high x 4 1/2 in. wide x 1 7/8 in. deep. + 5/8 in. projection into junction box (117 mm high x 114 mm wide x 47 mm deep + 15 mm projection into junction box)

Approvals, CSA: File No. LR1322
Approvals, Underwriters Laboratories Inc.: File No. E4436, Guide No. XAPX

Accessories:
TG511A1000/U – Medium Universal Thermostat Guard with clear cover and base, and opaque wall plate
TG511D1004/U – Medium Universal Thermostat Guard with Beige painted steel cover, opaque ring base and wall plate

Material Number	Application	Display	Setting Temperature Range	Switch Positions (System)	Switch Positions (Fan)	Differential Temperature Range	Changeover	Color
T6069A4002/U	2 pipe fan coil, manual heat-cool changeover, constant or cycled fan	No thermometer	(7°C to 28°C)	HEAT-OFF-COOL	HI-MED-LO	(1°C)	Manual	Tan
T6069A4010/U	2 pipe fan coil, manual heat-cool changeover, constant or cycled fan	No thermometer	44°F to 86°F	HEAT-OFF-COOL	HI-MED-LO	2°F	Manual	Tan
T6069B4000/U	4 pipe fan coil, manual heat-cool changeover, constant fan	No thermometer	(7°C to 28°C)	HEAT-OFF-COOL	HI-MED-LO	(1°C)	Manual	Premier White®
T6069B4018/U	4 pipe fan coil, manual heat-cool changeover, constant fan	No thermometer	44°F to 86°F	HEAT-OFF-COOL	HI-MED-LO	2°F	Manual	Tan
T6069C4016/U	4 pipe fan coil, manual heat-cool changeover, cycled fan	No thermometer	44°F to 86°F	HEAT-OFF-COOL	HI-MED-LO	2°F	Manual	Tan
T6069D4014/U	2 pipe fan coil, automatic heat-cool changeover, constant or cycled fan	Thermometer Included	44°F to 86°F	ON-AUTO-OFF	HI-MED-LO	2°F	Seasonal Auto with External Aquastat® Controller	Tan

T6169 Fan Coil Thermostat

The T6169 thermostats control line voltage valves and/or blower motors on fan coil units in manual or automatic changeover, cooling, heating or cooling/heating systems. The thermostats feature a single fan and/or system manual switches.

- Combines thermostat, single system and/or fan control switch in one deluxe-styled unit.
- Three speed manual FAN control on some models.
- Fan can be wired for continuous (ON) or cycled (AUTO) operation.
- System switch OFF position breaks heating/cooling and fan circuits.
- Color-coded leadwire connections.
- Available in classic gold or Premier White® styling.
- Language-free graphic symbols.
- Suitable for single or double gang electrical boxes.

Mounting: Mounts on 2 in. x 4 in. (50 mm x 75 mm) single or double-ganged vertically-oriented outlet box.
Supply Voltage: 120 to 277 Vac
Frequency: 50 Hz; 60 Hz
Electrical Ratings: 8.0 AFL / 48 ALR / 13A resistive @ 120 Vac; 4.4 AFL / 26.4 ALR / 7.5A resistive @ 208 Vac; 4.0 AFL / 24 ALR / 6.5A resistive @240 Vac; 3.3 AFL / 19.8 ALR 5.5A resistive @ 277 Vac
Approximate, Dimensions: 4 5/8 in. high x 4 1/2 in. wide x 1 7/8 in. deep. + 5/8 in. projection into junction box (117 mm high x 114 mm wide x 47 mm deep + 15 mm projection into junction box)

Approvals, CSA: CSA Certified, File No. LR1322
Approvals, Underwriters Laboratories Inc.: Listed File No. E4436, Guide No. XAPX

Accessories:
TG511A1000/U – Medium Universal Thermostat Guard with clear cover and base, and opaque wall plate
TG511D1004/U – Medium Universal Thermostat Guard with Beige painted steel cover, opaque ring base and wall plate

Material Number	Application	Setting Temperature Range	Switch Positions (System)	Switch Positions (Fan)	Differential Temperature Range	Display	Changeover	Color
T6169A4001/U	2 pipe fan coil, automatic heat-cool changeover, constant or cycled fan	(7°C to 28°C)		HI-OFF-MED-LO	(1°C)	Thermometer Included	Seasonal Auto with External Aquastat® Controller	Premier White®
T6169A4019/U	2 pipe fan coil, automatic heat-cool changeover, constant or cycled fan	44°F to 86°F		HI-OFF-MED-LO	2°F	No thermometer	Seasonal Auto with External Aquastat® Controller	Tan
T6169B4017/U	4 pipe fan coil, manual heat-cool changeover, no fan switching	44°F to 86°F	HEAT-OFF-COOL		2°F	Thermometer Included	Manual	Tan
T6169C4015/U	2 pipe fan coil, manual or automatic heat-cool changeover	44°F to 86°F	Auto-Off		2°F	Thermometer Included	Automatic or Manual	Tan

SuitePRO-TB6575; TB8575 Digital Fan-Coil Thermostat

TB6575A, TB6575B, and TB8575A are a family of Digital Fan-Coil thermostats, that provide line/low voltage on/off control for various fan-coil units in residential and commercial applications. Great for use in hotels, condos, and school classrooms.

- Simple, intuitive user interface and ease of installation.
- Attractive modern styling ideal for hotels and condos.
- Digital display of ambient temperature, setpoint, mode icons when cooling or heating relays operate, when energy savings mode is active, and fan status.
- Four buttons allow manual control of system operation, fan speed, and temperature setpoint adjustment.
- VersaSpeed ™ Fan Ramp Algorithm automatically adjusts Low, Medium, High fan speed.
- Optional freeze protection feature that turns on heat, if necessary.
- Activity sensing algorithm sets back thermostat to economy mode.
- Auto fan rest option sets back fan to auto mode.
- Energy savings mode – external energy savings input from dry contact such as time switch, occupancy sensor, or hotel cardkey overrides comfort setpoint with selectable setback heating or cooling setpoints.
- Energy savings input configurable as a normally open or normally closed dry contact.
- Proportional plus integral (P+I) control algorithm for precision temperature regulation.
- Selectable °C or °F.
- Adjustable deadband, in auto changeover mode, for heat and cool control.
- Adjustable maximum heating and minimum cooling setpoint limits.
- Installer setup mode allows changes of operating parameters.
- EEPROM permanently retains user settings, including setpoints, during power loss (no batteries required).
- Capability to display temperature sensor failure for easier troubleshooting.
- Optional remote temperature sensor and remote pipe sensor.

Display: LCD
Mounting: Horizontal mounting on 2 x 4 in. (50 mm x 75 mm) single gang electrical box. Vertical mounting 2 x 4 in. or 4 x 4 in. junction box with optional wall plate (50033847-001).
Color: Premier White®
Operating Humidity Range (% RH): 5 to 95% RH, non-condensing
Frequency: 50 Hz; 60 Hz
Approximate, Dimensions: 3 13/16 in. high x 5 13/16 in. wide x 1 1/8 in. deep (97 mm high x 148 mm wide x 29 mm deep)
Approvals, CSA: Certified
Approvals, FCC: FCC Part 15, Class B
Approvals, Underwriters Laboratories Inc.: Meets the same requirements as UL-873

Accessories:
50033847-001/U – Adapter plate for mounting TB6575/TB8575 series fan coil thermostats to vertical, single or double-gang junction box
C7041B2005/U – 20 K ohm NTC Temperature Sensor with 6 in. insertion
C7041B2013/U – 20 K ohm NTC Temperature Sensor with 12 in. insertion
C7041C2003/U – 20 K ohm NTC Temperature Sensor with 18 in. insertion
C7041P2004/U – 20 K ohm NTC Stainless Steel Button Sensor, 11/16 in. dia.
C7770A1006/U – 6 in. Duct Probe for Return Air 20 K ohm NTC non-linear Temperature Sensor
C7772A1004/U – 20 K ohm NTC non-linear Wall Flush Mount Temperature Sensor without logo
C7772A1012/U – 20 K ohm NTC non-linear Wall Flush Mount Temperature Sensor with Honeywell logo
TR21/U – 20 K ohm NTC non-linear Temperature Wall Module
TR21-A/U – 10 K ohm NTC non-linear Temperature Wall Module (for averaging only)

Material Number	Application	Setting Temperature Range	Switch Positions (System)	Switch Positions (Fan)	Supply Voltage	Electrical Ratings	Changeover	Comments	Description
TB6575A1000/U	2 or 4 pipe fan coil, Heat/Cool manual/auto changeover, 3-speed fan, 120 - 240 Vac	50°F to 90°F (10°C to 30°C)	OFF-HEAT-COOL-AUTO	HI-MED-LOW-AUTO-OFF	120 Vac ± 10%; 240 Vac ± 10%	120 Vac, Fan Rating: 6.0 A, Relay Rating: 1.0 A; 240 Vac, Fan Rating: 3.0 A, Relay Rating: 1.0 A	Manual/Auto		3-Speed Fan Coil Thermostat; 2 or 4 pipe Manual/ Auto Heat/Cool changeover, 3 speed fan, Supply voltage: 120/240 Vac 50/60 Hz
TB6575A1016/U	2 or 4 pipe fan coil, Heat/Cool manual/auto changeover, 3-speed fan, 120 - 240 Vac	50°F to 90°F (10°C to 30°C)	OFF-HEAT-COOL-AUTO	HI-MED-LOW-AUTO-OFF	120 Vac ± 10%; 240 Vac ± 10%	120 Vac, Fan Rating: 6.0 A, Relay Rating: 1.0 A; 240 Vac, Fan Rating: 3.0 A, Relay Rating: 1.0 A	Manual/Auto	No logo	3-Speed Fan Coil Thermostat; 2 or 4 pipe Manual/ Auto Heat/Cool changeover, 3 speed fan, Supply voltage: 120/240 Vac 50/60 Hz
TB6575B1000/U	2 pipe fan coil, Heat/Cool manual/auto changeover, 3-speed fan, 120 - 240 Vac	50°F to 90°F (10°C to 30°C)	OFF-HEAT-COOL-AUTO	HI-MED-LOW-AUTO-OFF	120 Vac ± 10%; 240 Vac ± 10%	120 Vac, Fan Rating: 6.0 A, Relay Rating: 1.0 A; 240 Vac, Fan Rating: 3.0 A, Relay Rating: 1.0 A	Manual/Auto		3-Speed Fan Coil Thermostat; 2 pipe Manual/Auto Heat/ Cool changeover, 3 speed fan, Supply voltage: 120/240 Vac 50/60 Hz

Material Number	Application	Setting Temperature Range	Switch Positions (System)	Switch Positions (Fan)	Supply Voltage	Electrical Ratings	Changeover	Comments	Description
TB6575C1000/U	2 or 4 pipe fan coil, Heat/Cool manual/auto changeover, 3-speed fan, 120 - 240 Vac	50°F to 90°F (10°C to 30°C)	OFF-HEAT-COOL-AUTO	HI-MED-LOW-AUTO-OFF	120 Vac ±10%; 240 Vac -15% to +10%; 277 Vac ±10%	277 Vac, Fan Rating: 2.4A, Heat/Cool Relay Rating : 1.0A	Manual/Auto		3-Speed Fan Coil Thermostat; 2 or 4 pipe Manual/ Auto Heat/Cool changeover, 3 speed fan, Supply voltage: 120/240 Vac 50/60 Hz
TB8575A1000/U	2 or 4 pipe fan coil, Heat/Cool manual/auto changeover, 3-speed fan, 24 Vac	50°F to 90°F (10°C to 30°C)	OFF-HEAT-COOL-AUTO	HI-MED-LOW-AUTO-OFF	20 to 30 Vac	24 Vac, Fan Rating: 1.0 A, Relay Rating: 1.0 A	Manual/Auto		3-Speed Fan Coil Thermostat; 2 or 4 pipe Manual/ Auto Heat or Cool changeover, 3 speed fan, Supply voltage: 24 Vac 50/60 Hz
TB8575A1016/U	2 or 4 pipe fan coil, Heat/Cool manual/auto changeover, 3-speed fan, 24 Vac	50°F to 90°F (10°C to 30°C)	OFF-HEAT-COOL-AUTO	HI-MED-LOW-AUTO-OFF	20 to 30 Vac	24 Vac, Fan Rating: 1.0 A, Relay Rating: 1.0 A	Manual/Auto	No logo	3-Speed Fan Coil Thermostat; 2 or 4 pipe Manual/ Auto Heat or Cool changeover, 3 speed fan, Supply voltage: 24 Vac 50/60 Hz

Fan Coil Thermostat Accessories and Replacement Parts

Material Number	Description	Used With	
50033847-001/U	Adapter plate for mounting TB6575/TB8575 series fan coil thermostats to vertical, single or double-gang junction box	SuitePRO	
535-34AB08-203	20 K ohm Pipe sensor	TB6575, TB8575	

Wireless Occupancy Solution

The WSK-24 controls HVAC equipment using an occupancy sensor and door switch, and is packaged with 24V dry contact receiver, a wireless PIR occupancy sensor with mounting kit, a wireless door sensor with mounting kit, and a wiring harness.

- Wireless system provides quick and easy installation
- Pre-configured door sensor and occupancy sensor
- Guest comfort is maintained by never turning off HVAC equipment when someone is in the room – even if they are sleeping
- Fuse protection
- Long battery life
- Low battery indication
- Receiver memory retained after power loss
- Optional sliding door/window sensor can be easily added

Side view of PIR detection pattern

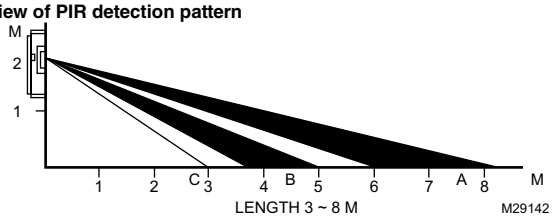

Top view of PIR detection pattern

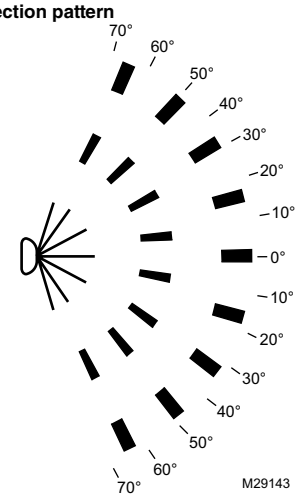

Dimensions in inches (millimeters)

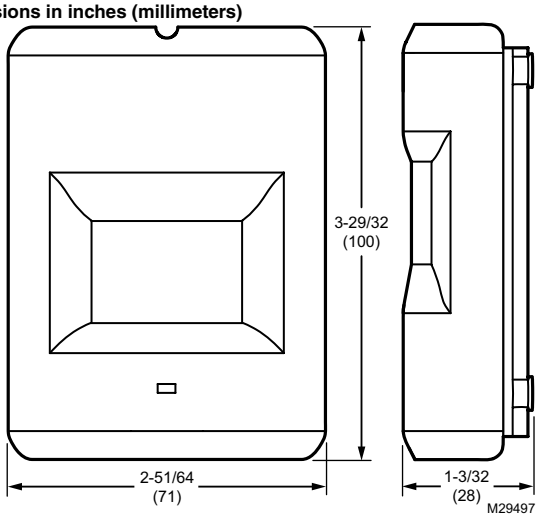

Sensor: PIR
Operating Temperature Range: Receiver: -5°F to 140°F; Door Sensor: -4°F to 140°F; PIR Sensor: -4°F to 104°F (Receiver: -21°C to 60°C; Door Sensor: -20°C to 60°C; PIR Sensor: -20°C to 40°C)
Approximate, Dimensions: Door Sensor: 2-19/64 in. high x 1-13/32 in. wide x 19/32 in. deep; Receiver: 3-13/32 in. high x 3-19/32 in. wide x 1-13/64 in. deep; PIR Sensor: 3-29/32 in. high x 2-51/64 in. wide x 1-3/32 in. deep (PIR Sensor: 100 mm high x 71 mm wide x 28 mm deep; Receiver: 86 mm high x 91 mm wide x 31 mm deep; Door Sensor: 58 mm high x 36 mm wide x 15 mm deep)

Wireless Range: Open Range – With antenna exposed: 200 ft, With antenna coiled inside receiver: 50 ft; Typical Range – With antenna exposed: 100 ft, With antenna coiled inside receiver: 40 ft
Approvals, FCC: FCC Part 15, Class B
Comments: PIR Detection Pattern--Length: 3 to 8 meters when mounted 2 meters above the floor; Angle: 140 degrees
Used With: TB6575, TB8575; TB7100; T7350/T7351 (requires R8222 switching relay)
Supply Voltage: Receiver: 24 Vac/Vdc at 50/60 Hz; Standby power consumption 15 mA; Channel 1 relay output, N.O.; Door Sensor: Two CR2032 lithium batteries; PIR Sensor: Three AAA E92 1.5V alkaline batteries

Material Number	Description	Application	Operating Frequency	Battery Life
WSK-24/U	Wireless Occupancy Solution	Wireless Occupancy Sensor for HVAC equipment	Receiver: 433.92 MHz; Door Sensor: 433.92 MHz	Door Sensor: Two years (under normal usage); PIR Sensor: One year (under normal usage)

Wireless Occupancy Solution Accessories

Used With: WSK-24

Material Number	Wireless Range	Operating Frequency	Battery Life
50037735-001	Open Range – With antenna exposed: 200 ft, With antenna coiled inside receiver: 50 ft; Typical Range – With antenna exposed: 100 ft, With antenna coiled inside receiver: 40 ft	433.92 MHz	Door Sensor: Two years (under normal usage)

T451; T651 Light and Medium Duty Line Voltage Thermostat

Light and Medium Duty Line Voltage Thermostats control line voltage valves, motors, contractors, electric heat, elements, duct furnaces, and fan coil units in heating/cooling systems.

- Automatic cooling and heating anticipation.
- Mount on standard vertical or horizontal outlet box.

Dimensions in inches (millimeters)

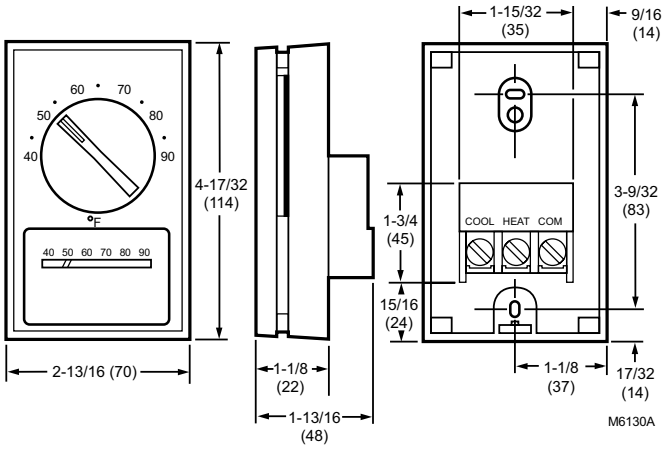

Color: Champagne gold faceplate with beige cover
Supply Voltage: 120 to 227 Vac
Frequency: 50 Hz; 60 Hz
Electrical Connections: Flylead
Electrical Ratings: 22 A @ 120 - 240 Vac Resistive; 19 A @ 277 Vac Resistive.; 9.8 FLA / 58.8 ALR @ 120 Vac; 5.6 FLA / 33.6 ALR @ 208 Vac; 4.9 FLA / 29.4 ALR @240 Vac; 4.2 FLA / 25.2 ALR @277 Vac
Approximate, Dimensions: 4 1/2 in. high x 2 15/16 in. wide x 1 1/2 in. deep (switches and wiring terminals protrude into outlet box 3/4 in.) (115 mm high x 75 mm wide x 39 mm deep (switches and wiring terminals protrude into outlet box 19 mm))
Sensor Element: Vapor filled dual diaphragm
Approvals, CSA: CSA Certified, File No. LR1322
Approvals, Underwriters Laboratories, Inc.: Listed; File No. E4436, Guide No. XAPX

Accessories:
TG511A1000/U – Medium Universal Thermostat Guard with clear cover and base, and opaque wall plate
TG511D1004/U – Medium Universal Thermostat Guard with Beige painted steel cover, opaque ring base and wall plate

Material Number	Application	Setting Temperature Range	Switch Positions (System)	Differential Temperature Range	Switching Action	Comments	Includes	Tradeline Value
T451A3005/U	Heating	44°F to 86°F		2°F	SPST - breaks on temperature rise		Vertical scaleplate with thermometer, range stops and locking cover screws, wall plate, high accuracy Dual Diaphragm sensor.	
T451B3004/U	Heating	50°F to 86°F		2°F	SPST - breaks on temperature rise; with positive off		Vertical scaleplate with thermometer and high accuracy Dual Diaphragm sensor.	
T651A3018/U	Heating and cooling	44°F to 86°F	heating and cooling	2°F	SPDT - breaks heating and makes cooling on temperature rise		Vertical scaleplate with thermometer, horizontal scaleplate with no thermometer, range stops and locking screws, wall plate, and high accuracy Dual Diaphragm sensor.	Super Tradeline
T651A3026/U	Heating and cooling	(7°C to 28°C)	heating and cooling	(1°C)	SPDT - breaks heating and makes cooling on temperature rise	Celsius Scale	Vertical scaleplate with thermometer, range stops and locking screws, wall plate, high accuracy Dual Diaphragm sensor.	

T4051 Heavy Duty Thermostat

Heavy Duty Line Voltage Thermostats are used to control fan coils, fans, motor starters, valves, contactors, and circulator motors in heating and/or cooling systems.

- Provide good line voltage comfort control.
- Use with Q651A,B subbases for system and fan switching.
- Removable setpoint knob locks setpoint and prevents tampering.
- With locking cover.

Application: Heating
Color: Plastic cover, tan
Differential Temperature Range: 1°F (0.6°C)
Supply Voltage: 120 Vac; 240 Vac
Frequency: 50 Hz; 60 Hz
Electrical Connections: Screw terminals
Electrical Ratings: 16 A @ 120 Vac Full Load; 8 A @ 240 Vac Full Load; 96 A @ 120 Vac LR; 48 A @ 240 Vac LR

Approximate, Dimensions: 5 in. high x 3 1/2 in. wide x 1 5/8 in. deep (127 mm high x 79 mm wide x 41 mm deep)
Switching Action: SPDT
Approvals, CSA: Certified: File No. LR95329-1
Approvals, Underwriters Laboratories Inc.: Listed: File No. E4436, Guide No. XAPX

Material Number	Setting Temperature Range	Description
T4051A1003/U	50°F to 80°F	Heavy Duty Line Voltage Thermostat

T6051; T6052 Heavy Duty Line Voltage Thermostats

Heavy Duty Line Voltage Thermostats are used to control fan coils, fans, motor starters, valves, contactors, and circulator motors in heating and/or cooling systems.

- Provide good line voltage comfort control.
- T6051A models use with Q651A, B subbases for system and fan switching.
- Removable setpoint knob locks setpoint and prevents tampering.
- With locking cover.

Mounting: T6051-Vertical mounting; T6052-Vertical or horizontal mounting
Color: Plastic cover, tan
Supply Voltage: 120 Vac; 240 Vac
Frequency: 50 Hz; 60 Hz
Electrical Connections: Screw terminals
Electrical Ratings: T6051-120 Vac: 16 AFL, 96 ALR; 240 Vac: 8 AFL, 48 ALR; Resistive 22A @ 120 Vac, 19 A @ 277 Vac; Pilot Duty 125 VA; T6052-Stage 1: 120 Vac: 16 AFL, 96 ALR; 240 Vac: 8 AFL, 48 ALR ; Stage 2: 120 Vac: 8 AFL, 48 ALR; 240 Vac: 4 AFL, 24 ALR
Sensor Element: Vapor filled dual diaphragm
Switching Action: T6051-SPDT; T6052-2 SPDT switches

Approvals, CSA: CSA Certified: File no. LR1620; T6051B1006/U only CSA Certified: File No. LR30676-L
Approvals, Underwriters Laboratories Inc.: Listed: File No. E4436, Guide No. XAPX; T6051B1006/U only-Listed: File No. E12842, Guide No. XBDV; Explosion Proof Enclosure, Class I, Groups C & D, and Class 2 Groups E, F, and G

Accessories:
TG511A1000/U – Medium Universal Thermostat Guard with clear cover and base, and opaque wall plate
TG511D1004/U – Medium Universal Thermostat Guard with Beige painted steel cover, opaque ring base and wall plate

Material Number	Application	Setting Temperature Range	Switch Positions (System)	Differential Temperature Range	Comments	Used With	Tradeline Value
T6051A1016/U	Heating and cooling	46°F to 84°F		1°F		Q651A, B subbases for system and fan switching	
T6051A1057/U	Heating and cooling	(8°C to 29°C)		(0.6°C)		Q651A, B subbases for system and fan switching	Tradeline
T6051B1006/U	Heating and cooling	46°F to 84°F		1°F	Explosion-proof		
T6052A1007/U	Two stage heating or two stage cooling	46°F to 84°F (8°C to 29°C)	2-stage heating or 2-stage cooling	1°F (0.6°C)			
T6052A1015/U	Two stage heating or two stage cooling	46°F to 84°F	2-stage heating or 2-stage cooling	Stage 1 Heat, Stage 2 Cool: 2.5°F; Stage 2 Heat, Stage 1 Cool: 3.2°F			Tradeline
T6052A1023/U	Two stage heating or two stage cooling	(8°C to 29°C)	2-stage heating or 2-stage cooling	(Stage 1 Heat, Stage 2 Cool: 1.4°C; Stage 2 Heat, Stage 1 Cool: 1.8°C)			
T6052B1013/U	Heating and cooling, auto changeover	46°F to 84°F	1-stage heating-cooling	Stage 1 Heat: 2.5°F; Stage 2 Cool: 3.2°F			Tradeline

Dimensions in inches (millimeters)

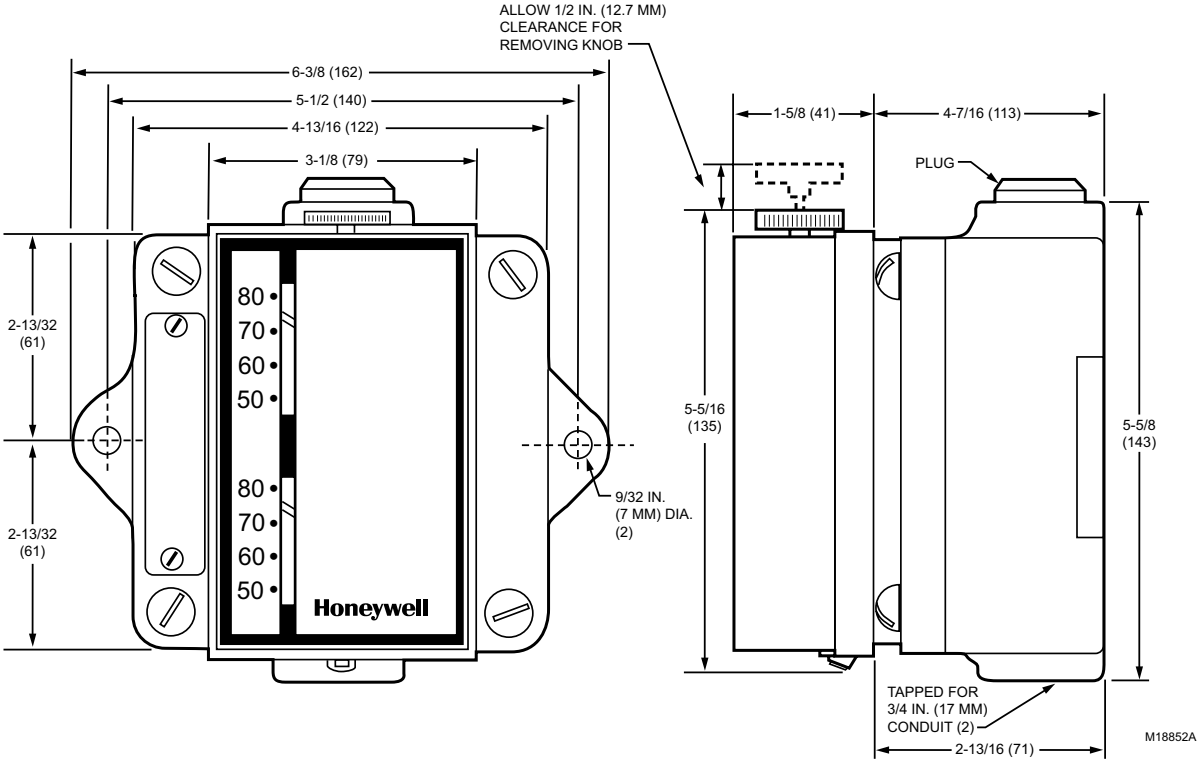

Line Volt Thermostats Cross Reference

T451, T651, Q473 Cross Reference

Thermostat Replaced						Replacement			
Competitor	Honeywell		Scale	Thermometer	Comments	Product Number	Scale	Thermometer	Comments
	Older	Series 2000							
		T4059A1005	10 - 30°C	yes	Includes range stop and cover screws	None			
	T451A1132 T451A1157 T451A1298	T451A2007	40 - 90°F	yes	Includes range stop and cover screws	**T451A3005**	44 - 86°F	yes	Includes range stop and cover screws
	T451A1173	T451A2015	40 - 90°F		with positive off	**T451B3004**	50 - 86°F		with positive off
	T451A1256	T451A2023			Trane logo on cover; Includes range stop and cover screws	None			
		T451A2049	40 - 70°F		with positive off	**T451B3004**	50 - 86°F		with positive off
	T651A1202	T651A2010	40 - 90°F			**T651A3000**	44 - 86°F		
White Rogers 1A10-651	T651A1269 T651A1236	T651A2028	40 - 90°F	yes	SUPER TRADELINE horizontal; no thermometer scaleplate; includes range stop, cover screws, wallplate, horizontal blank scaleplate, and vertical blank scaleplate	**T651A3018**	44 - 86°F	yes	Super TRADELINE horizontal no thermometer scaleplate. Includes range stop, cover screws, and wallplate
		T651A2036	40 - 90°F	yes	TRADELINE horizontal no thermometer scaleplate	**T651A3018**	44 - 86°F	yes	Super TRADELINE horizontal no thermometer scaleplate. Includes range stop, cover screws, and wallplate
		T651A2044	5 - 30°C			**T651A3026**	7 - 28°C	yes	TRADELINE Includes range stop, cover screws, and wallplate
		T651A2051	5 - 30°C	yes	TRADELINE Includes range stop, cover screws, wallplate, and vertical blank scaleplate	**T651A3026**	7 - 28°C	yes	TRADELINE range stop, cover screws, and wallplate
Jonson T26		T651A2077	40 - 90°F	yes	horizontal no thermometer scaleplate. Includes range stop, cover screws, wallplate, horizontal blank scaleplate, and vertical blank scaleplate	**T651A3018**	44 - 86°F	yes	SUPER TRADELINE horizontal no thermometer scaleplate. Includes range stop, cover screws and wallplate
		T651A2085	40 - 90°F	yes	Universal horizontal scaleplate with Universal logo. Includes range stop, cover screws, and wallplate	**T651A3018**	44 - 86°F	yes	SUPER TRADELINE horizontal no thermometer scaleplate. Includes range stop, cover screws and wallplate
		T6059A1000	10 - 30°C	yes	Includes range stop and cover screws	**T651A3026**	7 - 28°C	yes	TRADELINE Includes range stop, cover screws and wallplate
White Rogers S29-21	Q473A1040	Q473A2006			Switch Function - HEAT-OFF-COOL	No direct Replacement			Subbase not sold separately; order T6169B4017 instead
		Q473A2022			Trane; Switch Function - HEAT-OFF-COOL	No direct Replacement			Subbase not sold separately; order T6169B4017 with Honeywell logo instead
	Q473B21015	Q473B2005			Switch Function - OFF-AUTO	No direct Replacement			Subbase not sold separately; order T6169C4015 instead
		Q473B2013			Trane; Switch Function - OFF-AUTO	No direct Replacement			Subbase not sold separately; order T6169C4015 with Honeywell logo instead

T694 - T6069 Product Cross Reference

Product Number	Scale	Thermometer	System switch	Fan switch	Comments	Functional Replacement	
						New Product number	Difference from original Product
T694A2002	40 - 90°F		ON-OFF	HI-MED-LO		**T6169A4019/U**	Scale range 44-86°F
T694A2044	40 - 90°F		ON-OFF	HI-MED-LO	no logo	**T6169A4019/U**	Scale range 44-86°F; with Honeywell logo
T694B2001	40 - 90°F		ON-OFF; HEAT-COOL	HI-MED-LO		**T6069A4010/U**	Scale range 44-86°F
T694D2009	40 - 90°F		ON-OFF; HEAT-COOL	HI-MED-LO	Off opens fan and cooling circuits	**T6069B4018/U**	Scale range 44-86°F
T694F2007	40 - 90°F		ON-OFF; HEAT-COOL	HI-MED-LO	Off opens all circuits	**T6069B4018/U**	Scale range 44-86°F
T694M2009	40 - 90°F		HEAT-OFF-COOL	ON-AUTO	with Amp connector; includes cover screws and range stops	none	
T694M2017	40 - 90°F	yes	HEAT-OFF-COOL	ON-AUTO	with Amp connector; includes cover screws and range stops	none	

T651 Cross Reference New to Old

New Models	Product Numbers Replaced
T451A3005/U	T451A2007
T451B3004/U	T451A2015
	T451A2049
T651A3026/U	T651A2002
	T651A2044
	T651A2051
	T6059A1000
T651A3000/U	T651A2010
T651A3018/U	T651A2028
	T651A2036
	T651A2077
T6069A4002/U	T6069A3004
	T6069A3004B
	T6069A3012
	T6069A3012B
	T694B2001
T6069B4000/U	T6069B3002
	T6069B3002B
	T6069B3010
	T6069B3010B
	T6069B3036
	T694D2009
	T694F2007

New Models	Product Numbers Replaced
T6069B4026B	T6069B3028B
T6069C4008/U	T6069C3000
	T6069C3018
T6069D4006/U	T6069D3008
	T6069D3016
T6169A4001/U	T6169A3003
	T6169A3003B
	T6169A3011
	T6169A3011B
	T6169A3029
	T6169A3029B
	T6169A3037
	T6169A3037B
T6169A4019/U	T6169A3045B
	T694A2002
	T694A2044
T6169B4017/U	T651A + Q473A2006
T6169C4015/U	T651 + Q473B2005

Q651 Switching Subbase

Provide manual system switching for T6051 Thermostats.

- Provide positive OFF switching of the system.
- Mount vertically or horizontally on standard outlet box.
- Include pressure sensitive labels to identify switching positions.

Supply Voltage: 120 Vac; 240 Vac
Frequency: 60 Hz
Electrical Ratings: 16 A @ 120 Vac Full Load; 8 A @ 240 Vac Full Load; 96 A @ 120 Vac LR; 48 A @ 240 Vac LR
Approximate, Dimensions: 5 13/16 in. high x 3 3/16 in. wide x 11/16 in. deep (148 mm high x 81 mm wide x 18 mm deep)
Approvals, CSA: Certified

Approvals, Underwriters Laboratories Inc.: Listed: File No. E4436, Guide No. XAPX

Accessories:
TG511A1000/U – Medium Universal Thermostat Guard with clear cover and base, and opaque wall plate
TG511D1004/U – Medium Universal Thermostat Guard with Beige painted steel cover, opaque ring base and wall plate

Material Number	Application	Switch Positions (System)	Switch Positions (Fan)	Switching Action	Includes	Used With
Q651A1009/U	Subbase for T6051A	See switch labels	See switch labels	Provide positive OFF switching of the system	Pressure sensitive labels to identify switching positions; Switch labels: HEAT-OFF-COOL, HEAT-OFF-FAN, AUTO-OFF-ON	Thermostat: T6051A, Thermostat Guard: TG511 and TG512
Q651B1008/U	Subbase for T6051A	See switch labels	See switch labels	Provide positive OFF switching of the system	Switch labels: AUTO-OFF-FAN; Pressure sensitive labels to identify switching positions	Thermostat: T6051A, Thermostat Guard: TG511 and TG512

Line Volt Thermostat Replacement Parts and Accessories

Material Number	Description	Used With
135499/U	Setpoint Knob for T6051 and T6052	T6051, T6052
272804A/U	Range Stop and Locking Screws Assembly	T410, T498, T4398

T921 Proportional Thermostats

Proportional Thermostats provide low voltage, 3-wire control for valve motors, damper motors, and balancing relays in heating or cooling system applications.

- Bellows element adjusts potentiometer slider to regulate motor operation.
- Removable setting knob prevents unauthorized tampering with setpoint.

Application: Low voltage, 3-wire control for valve and damper motors and balancing relays
Throttling Range: 2.5°F (1.4°C)
Approximate, Dimensions: 5 11/16 in. high x 3 3/8 in. wide x 2 1/4 in. deep (144 mm high x 86 mm wide x 57 mm deep)
Output Signal: 135 Ohm potentiometer

Material Number	Mounting	Setting Temperature Range	Includes	Tradeline Value	Comments
T921A1183/U	Vertical	(13°C to 29°C)	Celsius model		
T921A1191/U	Vertical or Horizontal	56°F to 84°F	Slotted sides and an add-on faceplate to allow thermostat to be mounted horizontally.	Tradeline	
T921G1005/U	Vertical	56°F to 84°F			Switch at high end of throttling range

Proportional Thermostat Parts and Accessories

Material Number	Description	Used With
130224/U	Plastic Adjustment Knob for T921	T921
50014156-002/U	Remote room sensor for the ZonePRO®	ZonePRO
50014157-001/U	Duct temperature sensor for the ZonePRO®	ZonePRO

ZonePRO® Modulating/Floating Control Thermostats

The ZonePRO® thermostats are for low-voltage pressure-dependent variable air volume (VAV) applications. The four ZonePRO models can also be used for hydronic perimeter heating/cooling and bypass box with/without reheat.

- Provides modulating (2 to 10 Vdc analog) control (TB7980)
- Provides floating control (TB6980)
- Provides 2 additional outputs (TB6980B and TB7980B)
- Provides max. and min. setpoints for heating and cooling
- Provides a night setback (NSB) terminal for energy savings

Application: Low-voltage pressure dependent variable air volume (VAV) applications
Mounting: Vertical
Supply Voltage: 24 Vac

Frequency: 60 Hz
Approximate, Dimensions: 2 5/8 in. wide x 4 9/16 in. high x 1 in. deep (69 mm wide x 118 mm high x 27 mm deep)

Material Number	Setting Temperature Range	Output Signal	Output Signal Burden	Additional Outputs	Includes
TB6980A1007/U	50°F to 95°F (10°C to 35°C)	Floating	0.5A max @ 24 Vac		
TB6980B1006/U	50°F to 95°F (10°C to 35°C)	Floating	0.5A max @ 24 Vac	1 TRIAC; 1 Analog/TRIAC	2 additional outputs
TB7980A1006/U	50°F to 95°F (10°C to 35°C)	Modulating 0-10 Vdc or 2-10 Vdc	0-10V, 10k min		
TB7980B1005/U	50°F to 95°F (10°C to 35°C)	Modulating 0-10 Vdc or 2-10 Vdc	0.5A max @ 24 Vac	1 TRIAC; 1 Analog/TRIAC	2 additional outputs

Wi-Fi 9000 Color Touchscreen

Honeywell's Wi-Fi 9000 allows remote access to the thermostat through a computer, tablet, or smartphone with Honeywell's Total Connect Comfort Service.

- Tri-lingual - English, French and Spanish display options.
- Get Connected – Connect to home's existing Wi-Fi network
- Remote Control – Convenience, comfort and control from anywhere through web, tablet or smartphone access
- Apps available for tablet and smartphones
- Automatic software updates through Wi-Fi
- Selectable to 7 Day or Non-Programmable
- Program thermostat locally or over the web or app
- Customize the screen color to match any décor

Applications: Up to 3 Heat/2 Cool Heat Pumps; Up to 2 Heat/2 Cool Conventional Systems
Display: Color Touchscreen
Display Size: 8.06 sq in.
Mounting: Horizontal
Color: Premier White®
Changeover: Auto or Manual
Stages: Up to 3 Heat/2 Cool Heat Pump; Up to 2 Heat/2 Cool Conventional
Scheduling: On-line scheduling or Locally at thermostat
Switch Positions (System): HEAT-OFF-COOL-AUTO-EM.HEAT
Switch Positions (Fan): AUTO-ON-CIRC-FOLLOW SCHEDULE
Setting Temperature Range: Heat: 40°F to 90°F; Cool: 50°F to 99°F (Heat: 4.5°C to 32°C; Cool: 10°C to 37°C)

Operating Temperature Range: 32°F to 120°F (0°C to 48.9°C)
Operating Humidity Range (% RH): 5 to 90% RH, non-condensing
Power Method: Hardwired
Supply Voltage: 18 to 30 Vac
Frequency: 50 Hz; 60 Hz
Electrical Ratings: 18 to 30 Vac
Dimensions: 3 1/2 in. High, 4 1/2 in. Wide, 7/8 in. Deep (88 mm. High, 115 mm. Wide, 22 mm. Deep)
Used With: THP9045 Wire Saver
Comments: Tri-Lingual Display (selectable for English, French or Spanish)

Accessories:
THP9045A1023/U – WireSaver

Material Number	Programmability	Terminal Designations
TH9320WF5003/U	7-Day Multiple Day Programming or Non-Programmable	R, RC, C, W (O/B), W2 (AUX/E), Y, Y2, G, L, K

Wi-Fi VisionPRO® 8000

Your customers want comfort, convenience and connectivity. With the Wi-Fi VisionPRO, you can offer them all three. Using an existing Wi-Fi network plus Honeywell's free Total Connect Comfort services, the Wi-Fi VisionPRO allows homeowners to remotely control their comfort settings and manage their energy costs – with ease.

- Intuitive programming for easier setup
- Remote comfort control via computer, tablet or smartphone
- Universal application across more system types
- Equipment check/change reminders
- Programmable for annual energy savings

Applications: Up to 3 Heat/2 Cool heat pump or up to 2 Heat/2 Cool conventional
Display Size: 10 sq in.
Color: Arctic White
Changeover: Auto or Manual
Stages: Up to 3 Heat / 2 Cool Heat Pump or Up to 2 Heat / 2 Cool Conventional
Switch Positions (System): HEAT-OFF-COOL-AUTO-EM.HEAT
Switch Positions (Fan): AUTO-ON-CIRC-FOLLOW SCHEDULE
Setting Temperature Range: Heat: 40°F to 90°F; Cool 50°F to 99°F (Heat: 4.5°C to 32.0°C; Cool: 10°C to 37.0°C)
Operating Temperature Range: 32°F to 120°F (0°C to 48.9°C)
Humidification Setting Range: Cooling: 40 to 80% RH. Heating: 10 to 60% RH.

Dehumidification Setting Range: 40 to 80% RH.
Operating Humidity Range (% RH): 5 to 90% RH, non-condensing
Power Method: Hardwired
Supply Voltage: 18 to 30 Vac or 750 mV
Frequency: 50 Hz; 60 Hz
Electrical Connections: Screw terminals
Electrical Ratings: 18 to 30 Vac or 750 mV
Dimensions: 4 5/8 in. High, 4 15/16 in. Wide, 1 1/8 in. Deep (118 mm. High, 126 mm. Wide, 29 mm. Deep)
Includes: Wi-Fi VisionPRO® 8000 thermostat

Accessories:
THP9045A1023/U – WireSaver

Material Number	Programmability	Terminal Designations
TH8321WF1001/U	7-Day Multiple Day Programming or Non-Programmable	R, RC, C, W-O/B, W2-AUX/E, Y, Y2, G, A-L/A, K, U1 U1, S1 S1

Prestige® 2-Wire IAQ Thermostat

THX9421R5021WW/U

The Prestige® IAQ thermostat is a 2 wire high definition color touch screen thermostat, 7 day programmable and selectable for residential or light commercial use. Controls up to 4-stages of heat and 2-stages of cool in a heat pump system and up to 3-stages of heat and 2-stages of cool in a conventional system.

- Control heating, cooling and IAQ equipment with only 2 wires at the thermostat. Heating, cooling and IAQ equipment wires to the Equipment Interface Module.
- Smart Schedule - programs in seconds for any lifestyle
- Patented interview based programming and installer setup.
- RedLINK™ wireless communication.
- Increase profit per job by including RedLINK™ accessories that provide comfort and convenience. RedLINK™ accessories include the RedLINK™ Internet Gateway, Portable Comfort Control (PCC), Wireless Outdoor Sensor, Wireless Indoor Sensor, Wireless Entry/Exit Remote, Wireless Vent and Filter Boost Remote, TrueSTEAM™ humidifier with Wireless Adapter and TrueZONE® zoning panel with Wireless Adapter.
- Selectable for residential and light commercial applications. Meets commercial code and is title 24 compliant.
- Light commercial - commercial language (occupied and unoccupied), schedule holidays and custom events, remote setback, economizer and time of day.
- Delta T Alerts and Diagnostics informs customers when their system is not performing as expected with instructions to contact the dealer. Provides a sense of security and greater comfort while generating repeat business.
- All Prestige® IAQ kits come standard with a return and discharge air temperature sensor to measure Delta T.
- Alerts and User Interactions Log - Keeps a searchable history of alerts and setting changes to the thermostat to determine if there is a system malfunction or if the issue was caused by user error. Saves time in troubleshooting and points the technician in the right direction.
- Performance Logs - Keeps a history of heating and cooling performance. The performance log includes Minimum and Maximum Delta T, Minimum and Maximum Discharge Temperature, Minimum and Maximum Return Temperature, Minimum and Maximum Indoor Temperature/Humidity, Minimum and Maximum Outdoor Temperature/Humidity and Run Time. Quickly determine if the system is performing as expected and reduces service time on the job.
- Customizable Service Reminders allow dealers to remind their customers when it's time to call for service, when their warranty is expiring and to provide customized alerts.
- USB port for transferring Installer Setup, Customizable Reminders, Custom Events and Holidays to multiple thermostats.
- USB port for adding the dealer's full color business logo on the screen.
- 3 assignable outputs to control humidification, dehumidification, ventilation and a stage of heating or cooling.
- 4 assignable inputs on the Equipment Interface Module can be used with wired outdoor, indoor or discharge sensors, occupancy sensor for remote setback and dry contact devices to trip pre-packaged or custom alerts such as a full drain pan or water leak.
- Extend wireless range of the Equipment Interface Module by connecting a THM4000R1000 Wireless Adapter to the ABCD terminals.
- Tri-lingual - English, French and Spanish display options.
- Precise temperature control (+/- 1°F) for reliable and consistent temperature.
- Multiple staging options to provide comfort or energy savings.

Applications: Up to 4 Heat/2 Cool Heat Pumps; Up to 3 Heat/2 Cool Conventional Systems
Display Size: 8.06 sq in.
Terminal Designations: R, °C then RedLINK to Equipment Interface Module
Changeover: Auto or Manual
Stages: Up to 4 Heat/2 Cool Heat Pumps; Up to 3 Heat/2 Cool Conventional Systems, See Equipment Interface Module
Programmability: 7-Day Multiple Day Programming or Non-Programmable
Switch Positions (System): HEAT-OFF-COOL-AUTO-EM.HEAT
Switch Positions (Fan): AUTO-ON-CIRC-FOLLOW SCHEDULE
Setting Temperature Range: Heat: 40°F to 90°F; Cool 50°F to 99°F (Heat: 4.5°C to 32.0°C; Cool: 10°C to 37.0°C)
Operating Temperature Range: 32°F to 120°F (0°C to 48.9°C)
Humidification Setting Range: Cooling: 40 to 80% RH. Heating: 10 to 60% RH.
Dehumidification Setting Range: 40 to 80% RH.
Operating Humidity Range (% RH): 5 to 90% RH, non-condensing
Power Method: Hardwired
Supply Voltage: 18 to 30 Vac
Frequency: 50 Hz; 60 Hz
Electrical Connections: Screw terminals
Electrical Ratings: 18 to 30 Vac
Dimensions: 3 1/2 in. High, 4 1/2 in. Wide, 7/8 in. Deep (88 mm. High, 115 mm. Wide, 22 mm. Deep)
External Sensors Available: N/A
Comments: Tri-Lingual Display (selectable for English, French or Spanish)

RED LINK™
Wireless Technology

Accessories:
THP2400A1027B/U – Black Coverplate assembly for use with the Prestige® 2-Wire IAQ Thermostat
YTHM5421R1010/U – Prestige® 2-Wire IAQ Equipment Interface Module Kit with 2 Duct Sensors
THM5421R1021/U – Prestige® 2-Wire IAQ Equipment Interface Module
THM6000R1002/U – RedLINK Internet Gateway
THM4000R1000/U – Wireless Adapter for use with RedLINK™ enabled thermostats and TrueZONE™ system
REM5000R1001/U – Portable Comfort Control
REM1000R1003/U – RedLINK Wireless Entry/Exit Remote
HVC20A1000/U – Wireless Vent and Filter Boost Remote
C7089R1013/U – Senses outdoor temperature and humidity
C7189R1004/U – Wireless Indoor Air Sensor. RedLINK™ enabled. Senses indoor temperature and humidity

Material Number	Color	Includes	Used With
THX9421R5021WW/U	Front: White, Side: White		THM5421R1021 Equipment Interface Module and RedLINK™ accessories
YTHX9421R5085WW/U	Front: White, Side: White	THX9421R5021WW Prestige® 2-Wire IAQ Thermostat, THM5421R1021 Equipment Interface Module and 2 Duct Sensors	RedLINK™ accessories
YTHX9421R5101WW/U	Front: White, Side: White	THX9421R5021WW Prestige® 2-Wire IAQ Thermostat, THM5421R1021 Equipment Interface Module, C7089R1013 Wireless Outdoor Sensor and 2 Duct Sensors	RedLINK™ accessories
YTHX9421R5127WW/U	Front: White, Side: White	THX9421R5021WW Prestige® 2-Wire IAQ Thermostat, THM5421R1021 Equipment Interface Module, THM6000R1002 RedLINK™ Internet Gateway and 2 Duct Sensors	RedLINK™ accessories

VisionPRO® 8000 with RedLINK™ technology

VisionPRO® 8000 with RedLINK™ technology is a touchscreen thermostat, 7 day programmable and selectable for residential or light commercial use. Controls up to 3-stages of heat and 2-stages of cool in a heat pump system and up to 2-stages of heat and 2-stages of cool in a conventional system.

- Thermostat works standalone or with the THM5421R1021 Equipment Interface Module or with the TrueZONE Wireless Adapter.
- Smart Schedule - programs in seconds for any lifestyle.
- Patented interview based programming and installer setup.
- RedLINK™ wireless communication.
- Increase profit per job by including RedLINK™ accessories that provide comfort and convenience. RedLINK™ accessories include the RedLINK™ Internet Gateway, Portable Comfort Control (PCC), Wireless Outdoor Sensor, Wireless Indoor Sensor, Wireless Entry/Exit Remote, Wireless Vent and Filter Boost Remote, TrueSTEAM™ humidifier with Wireless Adapter and TrueZONE® zoning panel with Wireless Adapter.
- Selectable for residential and light commercial applications. Meets commercial code and is title 24 compliant.
- Light commercial - commercial language (occupied and unoccupied), schedule holidays and custom events, remote setback, economizer and time of day. Remote Setback requires the THM5421R1021 Equipment Interface Module.

Applications: Up to 1 Heat/1 Cool heat pump or up to 1 Heat/1 Cool conventional
Display Size: 10 sq in.
Color: Arctic White
Changeover: Auto or Manual
Stages: Up to 4 Heat / 2 Cool Heat Pump or Up to 3 Heat / 2 Cool Conventional when used with the Equipment Interface Module.
Programmability: 7-Day Multiple Day Programming or Non-Programmable
Switch Positions (System): HEAT-OFF-COOL-AUTO
Switch Positions (Fan): AUTO-ON-CIRC-FOLLOW SCHEDULE
Setting Temperature Range: Heat: 40°F to 90°F; Cool 50°F to 99°F (Heat: 4.5°C to 32.0°C; Cool: 10°C to 37.0°C)
Operating Temperature Range: 32°F to 120°F (0°C to 48.9°C)
Operating Humidity Range (% RH): 5 to 90% RH, non-condensing
Power Method: Battery or Hardwired (must be battery powered when used on a millivolt system)
Supply Voltage: 18 to 30 Vac
Frequency: 50 Hz; 60 Hz
Electrical Connections: Screw terminals
Electrical Ratings: 18 to 30 Vac or 750 mV
Dimensions: 4 5/8 in. High, 4 15/16 in. Wide, 1 1/8 in. Deep (118 mm. High, 126 mm. Wide, 29 mm. Deep)
Used With: Works standalone or with optional THM5421R1021 Equipment Interface Module and RedLINK™ accessories

- Plain language setup, no manual needed.
- Alerts and User Interactions Log - Keeps a searchable history of alerts and setting changes to the thermostat to determine if there is a system malfunction or if the issue was caused by a user error. Saves time in troubleshooting and points the technician in the right direction. The Alert and User Interaction Logs are viewable on a computer after you download them from the thermostat to a microSD card.
- Customizable Service Reminders allow dealers to remind their customers when it's time to call for service, when their warranty is expiring and to provide customized alerts.
- MicroSD port for copying the Installer Setup, Customizable Reminders, Custom Events and Holidays to multiple thermostats.
- MicroSD port for adding the dealer's contact information on the screen.
- 1 assignable output on the TH8321 model to control humidification, dehumidification, ventilation or a stage of heating/cooling.
- 3 assignable outputs on the Equipment Interface Module to control humidification, dehumidification, ventilation or a stage of heating/cooling. The TH8110 and TH8320 models require the use of a Wireless Indoor Sensor to control humidification and dehumidification.
- 1 assignable input can be used with a wired outdoor, indoor or discharge sensor.
- 4 assignable inputs on the Equipment Interface Module can be used with wired outdoor, indoor or discharge sensors, occupancy sensor for remote setback and dry contact devices to trip pre-packaged or custom alerts such as a full drain pan or water leak.
- Extend wireless range of the Equipment Interface Module by connecting a THM4000R1000 Wireless Adapter to the ABCD terminals.
- Dual powered - battery or hardwired (C wire).
- Precise temperature control (+/- 1°F) for reliable and consistent temperature.
- Multiple staging options to provide comfort or energy savings.

RED LINK™
Wireless Technology

Accessories:
YTHM5421R1010/U – Prestige® 2-Wire IAQ Equipment Interface Module Kit with 2 Duct Sensors
THM5421R1021/U – Prestige® 2-Wire IAQ Equipment Interface Module
THM6000R1002/U – RedLINK Internet Gateway
THM4000R1000/U – Wireless Adapter for use with RedLINK™ enabled thermostats and TrueZONE™ system
REM1000R1003/U – RedLINK Wireless Entry/Exit Remote
HVC20A1000/U – Wireless Vent and Filter Boost Remote
C7089R1013/U – Senses outdoor temperature and humidity
C7189R1004/U – Wireless Indoor Air Sensor. RedLINK™ enabled. Senses indoor temperature and humidity
THP2400A1019/U – Coverplate assembly for use with the RedLINK™ VisionPRO®
REM5000R1001/U – Portable Comfort Control

Material Number	Terminal Designations	Stages (when used standalone)	Humidification Setting Range	Dehumidification Setting Range	Includes
TH8110R1008/U	R, RC, C, W-O/B, Y, G, K, S1 S1	Up to 1 Heat / 1 Cool Heat Pump or Up to 1 Heat / 1 Cool Conventional			VisionPRO® 8000 thermostat
TH8320R1003/U	R, RC, C, W-O/B, W2-AUX/E, Y, Y2, G, A-L/A, K, S1 S1	Up to 3 Heat / 2 Cool Heat Pump or Up to 2 Heat / 2 Cool Conventional			VisionPRO® 8000 thermostat
TH8321R1001/U	R, RC, C, W-O/B, W2-AUX/E, Y, Y2, G, A-L/A, K, U1 U1, S1 S1	Up to 3 Heat / 2 Cool Heat Pump or Up to 2 Heat / 2 Cool Conventional	Cooling: 40 to 80% RH. Heating: 10 to 60% RH.	40 to 80% RH.	VisionPRO® 8000 thermostat
YTH8321R1002/U	R, RC, C, W-O/B, W2-AUX/E, Y, Y2, G, A-L/A, K, U1 U1, S1 S1	Up to 3 Heat / 2 Cool Heat Pump or Up to 2 Heat / 2 Cool Conventional	Cooling: 40 to 80% RH. Heating: 10 to 60% RH.	40 to 80% RH.	TH8321R1001 VisionPRO® 8000 thermostat and THM6000R1002 RedLINK™ Internet Gateway

THM5421 Prestige® 2-Wire IAQ Comfort System Equipment Interface Module

THM5421 Equipment Interface Module for Prestige® IAQ and VisionPRO® 8000 with RedLINK™. Equipment Interface Module controls up to 4-stages of heat and 2-stages of cool in a heat pump system and up to 3-stages of heat and 2-stages of cool in a conventional system. Three sets of Universal IAQ contacts to control humidification, dehumidification, and ventilation. Four sensor inputs for wired sensors or dry contact devices.

Applications: Gas, oil, electric, heat pump, forced warm air, hot water, steam or gravity
Mounting: Vertical
Color: Gray
Operating Temperature Range: -40°F to 165°F (-40°C to 73.9°C)
Operating Humidity Range (% RH): 5 to 95% RH, non-condensing
Power Method: Hardwired
Supply Voltage: 18 to 30 Vac
Frequency: 50 Hz; 60 Hz
Electrical Connections: Screw terminals
Electrical Ratings: 18 to 30 Vac

Dimensions: 9 5/16 in. High, 4 13/16 in. Wide, 1 5/8 in. Deep (237.4 mm High, 122.5 mm Wide, 40.6 mm Deep)
Cool Current: 1.0 A running
Heat Current: 1.0 A running
Fan Current: 0.5A running

RED LINK™ Wireless Technology

Material Number	Terminal Designations	Stages	Includes	Used With
THM5421R1021/U	R, RC, RH, C, W-O/B, W2-AUX1, W3-AUX2, Y, Y2, G, A-L/A, U1, U1, U2, U2, U3, U3, S1, S1, S2, S2, S3, S3, S4, S4, A, B, C, D	Up to 4 Heat / 2 Cool Heat Pump or Up to 3 Heat / 2 Cool Conventional	THM5421R1021 Equipment Interface Module	All THX9421R5021 Prestige® 2-Wire IAQ Thermostats and all versions of Prestige® IAQ Thermostats and the VisionPRO® Thermostats with RedLINK™ technology.
YTHM5421R1010/U	R, RC, RH, C, W-O/B, W2-AUX1, W3-AUX2, Y, Y2, G, A-L/A, U1, U1, U2, U2, U3, U3, S1, S1, S2, S2, S3, S3, S4, S4, A, B, C, D	Up to 4 Heat / 2 Cool Heat Pump or Up to 3 Heat / 2 Cool Conventional	THM5421R1021 Equipment Interface Module and 2 Duct Sensors	All THX9421R5021 Prestige® 2-Wire IAQ Thermostats and all versions of Prestige® IAQ Thermostats and the VisionPRO® Thermostats with RedLINK™ technology.

7-Day Touchscreen Programmable Thermostat

Thermostat

- 7-day program schedules maximize comfort and economy.
- Armchair programming: Just pull thermostat from the wall to set schedules.
- Energy-saving settings for maximum cost savings.
- One-touch temp control overrides program schedule at any time.
- Precise comfort control keeps temperature within 1°F of the level you set.
- Change/check reminders let you know when to service or replace filters, batteries and other critical components.
- Large touchscreen display with backlight is easy to read – even in the dark.
- Select models accommodate optional outdoor or indoor remote sensors.

Display Size: 10 sq in.
Terminal Designations: R, RC, W-O/B, Y, G, C, W2-Aux, Y2/E, L, S1, S2
Mounting: Horizontal
Color: Premier White®
Changeover: Auto/Manual Selectable
Stages: Up to 2 Heat/2 Cool Conventional; Up to 2 Heat/1 Cool Heat Pump
Programmability: 7 Day Multiple Day Programming or Non-Programmable
Switch Positions (System): HEAT-OFF-COOL-AUTO-EM.HEAT
Switch Positions (Fan): AUTO-ON-CIRC
Differential Temperature: ± 1°F (±0.5°C)

Operating Humidity Range (% RH): 5 to 90% RH, non-condensing
Power Method: Battery or Hardwired
Frequency: 50 Hz; 60 Hz
Electrical Ratings: 20 to 30 Vac or 750 mV
Dimensions: 3-3/4 in. high x 6 in. wide x 1-3/8 in. deep (99 mm high x 152 mm wide x 35 mm deep)
Sensor Element: Thermistor
Cool Current: 1.0 A running
Heat Current: 1.0 A running
Fan Current: 0.6A running
Comments: Selectable: Programmable or Non-Programmable; The L terminal is an input or output.

Material Number	Applications	Setting Temperature Range
TH7220U1035/U	Heat/Cool or Heat Pump with Auxiliary Heat	Heat: 40°F to 90°F; Cool: 50°F to 99°F (Heat: 4.5°C to 32°C; Cool: 10°C to 37°C)

CommercialPRO® 7000

The TB7220 COMMERCIALPRO® 7000 Programmable Thermostat is an effortless, seven-day programmable thermostat that provides universal system compatibility, precise comfort control and is easy-to-program.

- Large, clear display with backlight shows the current and set temperature and time – even in the dark (constant Backlight requires Common terminal).
- Menu-driven programming make setup effortless.
- Beautiful ergonomic design is smart and sophisticated to match your customers' lifestyle.
- Real-time clock keeps time during power failures and automatically updates to daylight savings.
- Saving Changes notification lets you know when the schedule changes have been saved.
- Change reminders let you know when to replace the batteries.
- Holiday Override options allow you to override the program schedule, as desired.
- Speedy same – schedule programming – no need to copy multiple days.
- Armchair programming allows you to remove the thermostat from the wall for programming.

Dimensions in inches (millimeters)

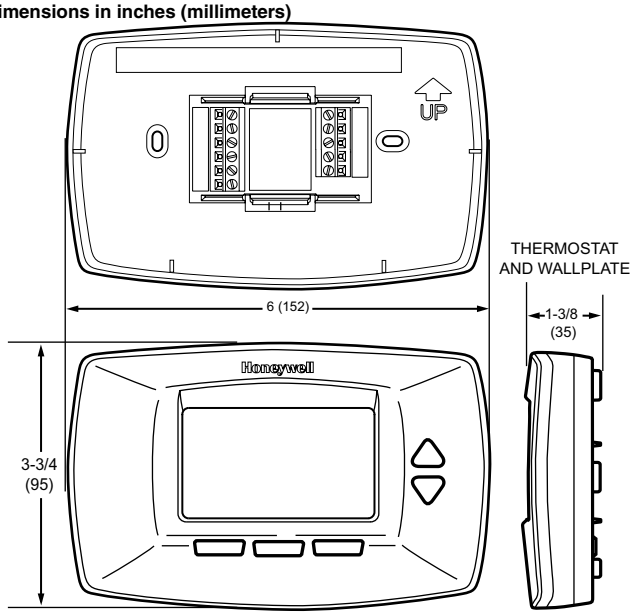

M13668

Application: Packaged RTU; Conventional systems; Heat Pump Systems; 24 Vac heating and cooling systems
Color: Premier White®
Power Method: 24 Vac or Battery
Approximate, Dimensions: 6 in. wide x 3 3/4 in. high x 1 3/8 in. deep (152 mm wide x 96 mm high x 35 mm deep)
Network Communications: None
Comments: Includes A terminal to enable an economizer or control a lighting panel when used as a time of day relay; Selectable programmable or non-programmable.

Accessories:
50002883-001/U – Cover Plate Assembly
C7041B2005/U – 20 K ohm NTC Temperature Sensor with 6 in. insertion
C7041B2013/U – 20 K ohm NTC Temperature Sensor with 12 in. insertion
C7041C2003/U – 20 K ohm NTC Temperature Sensor with 18 in. insertion
C7041P2004/U – 20 K ohm NTC Stainless Steel Button Sensor, 11/16 in. dia.
C7089U1006/U – Remote Outdoor Sensor
C7189U1005/U – Remote Indoor Sensor
C7770A1006/U – 6 in. Duct Probe for Return Air 20 K ohm NTC non-linear Temperature Sensor
C7772A1004/U – 20 K ohm NTC non-linear Wall Flush Mount Temperature Sensor without logo
C7772A1012/U – 20 K ohm NTC non-linear Wall Flush Mount Temperature Sensor with Honeywell logo
TR21/U – 20 K ohm NTC non-linear Temperature Wall Module
TR21-A/U – 10 K ohm NTC non-linear Temperature Wall Module for Averaging only
TR21-A-US/U – 10 K ohm NTC non-linear Temperature Wall Module, made in USA
TR21-J-US/U – 20 K ohm NTC non-linear Temperature Wall Module w/ Lon Jack, made in USA
TR21-US/U – 20 K ohm NTC non-linear Temperature Wall Module, made in USA

Material Number	Switch Positions (System)	Switch Positions (Fan)	Terminals Designations	Stages	Setting Temperature Range
TB7220U1012/U	HEAT-OFF-COOL-AUTO-EM.HEAT	AUTO-ON	R, Rc, W (O/B), W2 (W1), Y, Y2, A, G, C, S1, S2	Up to 3 Heat/2 Cool Heat Pump; Up to 2 Heat/2 Cool Conventional	Heat: 40°F to 90°F; Cool: 50°F to 99°F (Heat: 4.5°C to 32°C; Cool: 10°C to 37°C)

MultiPRO™ 7000

The MultiPRO™ Multispeed and Multipurpose Thermostat is an effortless, seven-day programmable/non-programmable thermostat that provides universal system compatibility, precise comfort and ease of programming.

- Large, clear display with backlight shows the current and set temperature and time – even in the dark (constant Backlight requires Common Terminal).
- Menu-driven programming make setup effortless.
- Beautiful ergonomic design is smart and sophisticated to match your customers' lifestyle.
- Real-time clock keeps time during power failures and automatically updates to daylight savings.
- Saving Changes notification lets you know when the schedule changes have been saved.
- Change reminders let you know when to replace the batteries.
- Holiday Override options allow you to override the program schedule, as desired.
- Speedy same – schedule programming – no need to copy multiple days.
- Armchair programming allows you to remove the thermostat from the wall for programming.
- Programmable or non-programmable modes.
- Remote setback input for occupancy sensors or timeclocks.
- VersaSpeed™ fan ramping algorithm and fan reset algorithm (fan coil and PTAC applications).
- Up to 3 fan speeds for fan coil and 2 fan speeds for PTAC applications.
- Remote Indoor air sensing option (20K ohm or 10K ohm).

Dimensions in inches (millimeters)

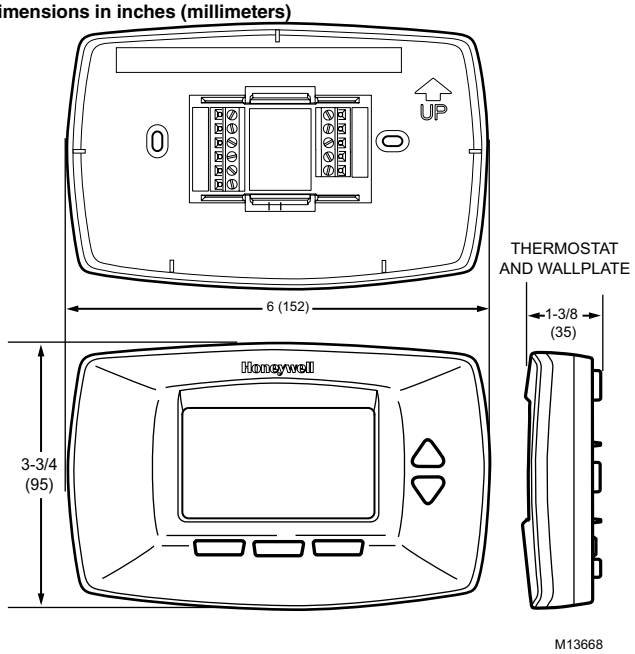

Application: Conventional, Heat Pump, Fan Coil, and PTAC Systems
Color: Premier White®
Power Method: 24 Vac or Battery
Network Communications: None
Comments: Selectable programmable or non-programmable; Includes 3 speed fan control and configurable sensor input for indoor temperature, occupancy sensor, or changeover.

Accessories:
50002883-001/U – Cover Plate Assembly
C7041B2005/U – 20 K ohm NTC Temperature Sensor with 6 in. insertion
C7041B2013/U – 20 K ohm NTC Temperature Sensor with 12 in. insertion
C7041C2003/U – 20 K ohm NTC Temperature Sensor with 18 in. insertion
C7041P2004/U – 20 K ohm NTC Stainless Steel Button Sensor, 11/16 in. dia.
C7089U1006/U – Remote Outdoor Sensor
C7189U1005/U – Remote Indoor Sensor
C7770A1006/U – 6 in. Duct Probe for Return Air 20 K ohm NTC non-linear Temperature Sensor
C7772A1004/U – 20 K ohm NTC non-linear Wall Flush Mount Temperature Sensor without logo
C7772A1012/U – 20 K ohm NTC non-linear Wall Flush Mount Temperature Sensor with Honeywell logo
TR21/U – 20 K ohm NTC non-linear Temperature Wall Module
TR21-A/U – 10 K ohm NTC non-linear Temperature Wall Module for Averaging only
TR21-A-US/U – 10 K ohm NTC non-linear Temperature Wall Module, made in USA
TR21-J-US/U – 20 K ohm NTC non-linear Temperature Wall Module w/ Lon Jack, made in USA
TR21-US/U – 20 K ohm NTC non-linear Temperature Wall Module, made in USA
TR21-WK/U – Wireless Temperature Sensor/Receiver Kit, selectable setpoint, Override
TR21-WKU/U – Wireless Temperature Sensor/Receiver Kit, selectable setpoint, Override, no HW logo
TR21-WS/U – Wireless Temperature Sensor Only, For replacement (Requires a wireless receiver)
TR21-WSU/U – Wireless Temperature Sensor Only, For replacement (Requires a wireless receiver), no HW logo
WSK-24/U – Wireless Occupancy Sensor Kit with logo

Material Number	Switch Positions (System)	Switch Positions (Fan)	Terminals Designations	Stages	Setting Temperature Range
TB7100A1000/U	HEAT-OFF-COOL-AUTO-EM.HEAT	AUTO-ON; Fan Coil: HI-MED-LO-AUTO; PTAC: HI-LO-AUTO	R, Rc, W1, O/B, Y, G, G2, G3, C, S1, S2	1 Heat/ 1Cool Conventional; Up to 2 Heat/ 1 Cool Heat Pump; 2 or 4 pipe Fan Coil; Up to 2 Heat/ 1 Cool PTAC	Heat: 40°F to 90°F; Cool: 50°F to 99°F (Heat: 4.5°C to 32°C; Cool: 10°C to 37°C)

T7350 Programmable Commercial Thermostats

Dimensions in inches (millimeters)

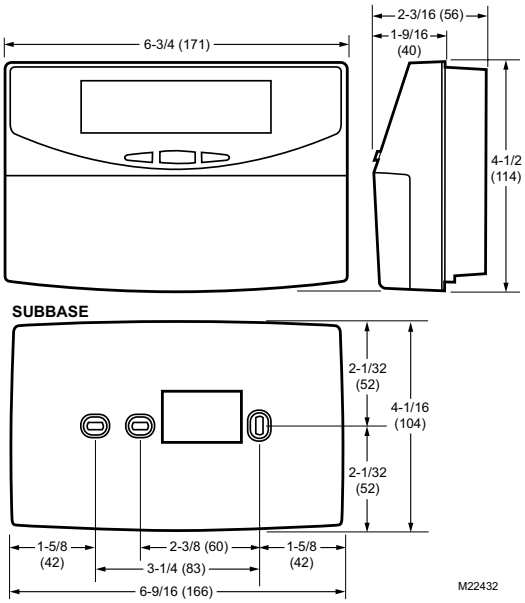

The T7350 Commercial Programmable Thermostat controls 24 Vac commercial single zone heating, ventilating and air conditioning (HVAC) equipment. The thermostat includes the keypad and display for 7-day programming and equipment control connections.

- 365-day programming.
- Two Occupied and two Not Occupied periods per day.
- Thermostat Interface Module (TIM) connections to thermostat from PDA for advanced configuration, programming, keypad lockout, etc.
- Individual heat and cool setpoints available for Occupied and Not Occupied periods.
- P+I+D control minimizes temperature fluctuations.
- Recovery ramping control automatically optimizes equipment start times based on building load.
- Universal Versaguard™ Thermostat guards available.
- Convenient overrides allow temporary setpoint changes.
- Keypad multi-level lockout available with all models.
- Remote sensor capability - EXCEPT T7350A model - for temperature (including outdoor air and discharge air) and humidity sensors.
- Auxiliary contact interfaces with a Honeywell Economizer System (for total rooftop control integration) or as a dehumidification output.

Color: Trident White
Switch Positions (System): HEAT-OFF-COOL-AUTO-EM.HEAT
Switch Positions (Fan): AUTO-ON
Supply Voltage: 20 to 30 Vac; 24 Vac
Frequency: 50 Hz; 60 Hz
Network Communications: None

Accessories:
C7041B2005/U – 20 K ohm NTC Temperature Sensor with 6 in. insertion
C7041B2013/U – 20 K ohm NTC Temperature Sensor with 12 in. insertion
C7041R2000/U – 20 K ohm NTC Type III Averaging Temperature Sensor, 12ft
C7089A1002/U – Remote Outdoor Sensor
H7625A2010/U – Wall Humidity Sensor, ±2% RH, Output 4-20 mA or 0-5/10 Vdc, with 20 K ohm temp
H7625B2006/U – Duct Humidity Sensor, ±2% RH, Output 4-20 mA or 0-5/10 Vdc, with 20 K ohm temp
H7635A2012/U – Wall Humidity Sensor, ± 3% RH, Output 4-20 mA or 0-5/10 Vdc, with 20 K ohm temp
H7655A1001/U – Wall Humidity Sensor, 5% RH, 0-10 Vdc fixed output
H7655B2014/U – Duct Humidity Sensor, 5% RH, Selectable 4-20 mA or 0-5/10 Vdc, with 20 K ohm temp
T7771A1005/U – 20 K ohm NTC non-linear Temperature Wall Module
TR21/U – 20 K ohm NTC non-linear Temperature Wall Module
TR21-A/U – 10 K ohm NTC non-linear Temperature Wall Module for Averaging only
TR21-A-US/U – 10 K ohm NTC non-linear Temperature Wall Module, made in USA
TR21-H/U – 20 K ohm NTC non-linear Temperature/Humidity Wall Module w/Lon Jack
TR21-H-US/U – 20 K ohm NTC non-linear Temperature/Humidity Wall Module w/Lon Jack, made in USA
TR21-J-US/U – 20 K ohm NTC non-linear Temperature Wall Module w/Lon Jack, made in USA
TR21-US/U – 20 K ohm NTC non-linear Temperature Wall Module, made in USA
TR21-WK/U – Wireless Temperature Sensor/Receiver Kit, selectable setpoint, Override
TR21-WKU/U – Wireless Temperature Sensor/Receiver Kit, selectable setpoint, Override, no HW logo
TR21-WS/U – Wireless Temperature Sensor Only, For replacement (Requires a wireless receiver)
TR21-WSU/U – Wireless Temperature Sensor Only, For replacement (Requires a wireless receiver) no HW logo
TR22/U – 20 K ohm NTC non-linear Temperature Wall Module w/selectable setpoint, Lon Jack
TR22-US/U – 20 K ohm NTC Temperature Wall Module w/selectable setpoint, Lon Jack, made in USA
TR23/U – 20 K ohm NTC Temperature Wall Module w/selectable setpoint, Lon Jack, Override
TR23-H/U – 20 K ohm NTC Temperature/Humidity Wall Module w/ selectable setpoint, Lon Jack, Override
TR23-H-US/U – 20 K Temperature/Humidity Wall Module w/selectable setpoint/Lon Jack/Override/made in USA
TR23-N/U – 20 K Temperature Wall Module w/selectable setpoint/Lon Jack/Override/No HW logo/made in USA
TR23-N-US/U – 20 K Temperature Wall Module w/selectable setpoint/ Lon Jack/Override/No HW logo/made in USA
TR23-US/U – 20 K Temperature Wall Module w/selectable setpoint/Lon Jack/Override/made in USA
TR23-WK/U – Wireless Temperature Sensor/Receiver Kit, selectable setpoint, Occupied Override
TR23-WKU/U – Wireless Temperature Sensor/Receiver Kit, selectable setpoint, Override, no HW logo
TR23-WS/U – Wireless Sensor only w/Setpoint Adjust/override. For replacement
TR23-WSU/U – Wireless Sensor only w/Setpoint Adjust/override, For replacement, No HW logo
TR24/U – 20 K ohm NTC non-linear Temperature Wall Module w/Lon Jack, Override
TR24-US/U – 20 K ohm non-linear Temperature Wall Module w/Lon Jack, Override, made in USA
WSK-24/U – Wireless Occupancy Sensor Kit with logo

Material Number	Application	Stages	Comments
T7350A1004/U	Conventional and Heat Pump systems	1 Heat / 1 Cool	
T7350B1002/U	Conventional and Heat Pump systems	2 Heat / 2 Cool	Remote Temp, Outdoor, Discharge Air
T7350D1008/U	Conventional and Heat Pump systems	3 Heat / 3 Cool	Remote Temp, Outdoor, Discharge Air, Humidity, Occupancy
T7350M1008/U	Modulating Systems	2 Mod (4-20 mA)/ 2 Relay	Remote Temp, Outdoor, Discharge Air, Humidity, Occupancy

T7351F Programmable Commercial Thermostats

Dimensions in inches (millimeters)

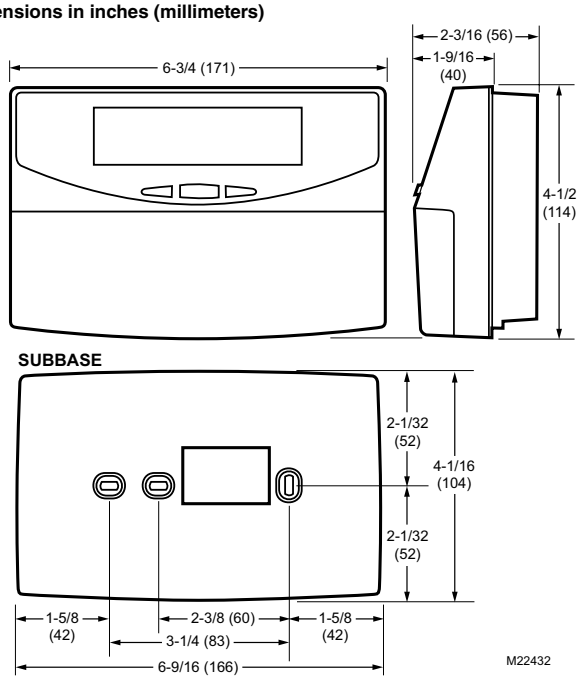

The T7351 Commercial Programmable Thermostat controls 24 Vac commercial single zone heating, ventilating and air conditioning (HVAC) equipment. The thermostat includes the keypad and display for 365-day programming and equipment control connections.

- Typically used in buildings (including: restaurants, shopping malls, office buildings and banks) under 55,000 square feet.
- For single zone rooftop units, split systems, heat pumps or hot/chilled water systems.
- 365-day programming.
- Two Occupied and two Not Occupied periods per day.
- Individual heat and cool setpoints available for Occupied and Not Occupied periods.
- P+I+D control minimizes temperature fluctuations.
- Recovery ramp control automatically optimizes equipment start times based on building load.
- Convenient overrides allow temporary setpoint changes.
- Keypad multi-level lockout available with all models.
- Remote sensor capability for temperature (including outdoor air and discharge air) and humidity sensors.
- Auxiliary subbase contact typically interface with a Honeywell Economizer System (for total rooftop control integration) or act as dehumidification output.
- Universal Versaguard Thermostat guards available.

Color: Trident White
Switch Positions (System): HEAT-OFF-COOL-AUTO-EM.HEAT
Switch Positions (Fan): AUTO-ON
Supply Voltage: 20 to 30 Vac; 24 Vac
Frequency: 50 Hz; 60 Hz

Accessories:
C7041B2005/U – 20 K ohm NTC Temperature Sensor with 6 in. insertion
C7041B2013/U – 20 K ohm NTC Temperature Sensor with 12 in. insertion
C7041R2000/U – 20 K ohm NTC Type III Averaging Temperature Sensor, 12ft
C7089A1002/U – Remote Outdoor Sensor
H7625A2010/U – Wall Humidity Sensor, ±2% RH, Output 4-20 mA or 0-5/10 Vdc, with 20 K ohm temp
H7625B2006/U – Duct Humidity Sensor, ±2% RH, Output 4-20 mA or 0-5/10 Vdc, with 20 K ohm temp
H7635A2012/U – Wall Humidity Sensor, ± 3% RH, Output 4-20 mA or 0-5/10 Vdc, with 20 K ohm temp
H7655A1001/U – Wall Humidity Sensor, 5% RH, 0-10 Vdc fixed output
H7655B2014/U – Duct Humidity Sensor, 5% RH, Selectable 4-20 mA or 0-5/10 Vdc, with 20 K ohm temp
T7771A1005/U – 20 K ohm NTC non-linear Temperature Wall Module
TR21/U – 20 K ohm NTC non-linear Temperature Wall Module
TR21-A/U – 10 K ohm NTC non-linear Temperature Wall Module for Averaging only
TR21-A-US/U – 10 K ohm NTC non-linear Temperature Wall Module, made in USA
TR21-H/U – 20 K ohm NTC non-linear Temperature/Humidity Wall Module w/Lon Jack
TR21-H-US/U – 20 K ohm NTC non-linear Temperature/Humidity Wall Module w/Lon Jack, made in USA
TR21-J-US/U – 20 K ohm NTC non-linear Temperature Wall Module w/Lon Jack, made in USA
TR21-US/U – 20 K ohm NTC non-linear Temperature Wall Module, made in USA
TR21-WK/U – Wireless Temperature Sensor/Receiver Kit, selectable setpoint, Override
TR21-WKU/U – Wireless Temperature Sensor/Receiver Kit, selectable setpoint, Override, no HW logo
TR21-WS/U – Wireless Temperature Sensor Only, For replacement (Requires a wireless receiver)
TR21-WSU/U – Wireless Temperature Sensor Only, For replacement (Requires a wireless receiver) no HW logo
TR22/U – 20 K ohm NTC non-linear Temperature Wall Module w/selectable setpoint, Lon Jack
TR22-US/U – 20 K ohm NTC Temperature Wall Module w/selectable setpoint, Lon Jack, made in USA
TR23/U – 20 K ohm NTC Temperature Wall Module w/selectable setpoint, Lon Jack, Override
TR23-H/U – 20 K ohm NTC Temperature/Humidity Wall Module w/selectable setpoint, Lon Jack, Override
TR23-H-US/U – 20 K Temperature/Humidity Wall Module w/selectable setpoint/Lon Jack/Override/made in USA
TR23-N/U – 20 K Temperature Wall Module w/selectable setpoint/Lon Jack/Override/No HW logo/made in USA
TR23-N-US/U – 20 K Temperature Wall Module w/selectable setpoint/Lon Jack/Override/No HW logo/made in USA
TR23-US/U – 20 K Temperature Wall Module w/selectable setpoint/Lon Jack/Override/made in USA
TR23-WK/U – Wireless Temperature Sensor/Receiver Kit, selectable setpoint, Occupied Override
TR23-WKU/U – Wireless Temperature Sensor/Receiver Kit, selectable setpoint, Override, no HW logo
TR23-WS/U – Wireless Sensor only w/Setpoint Adjust/override. For replacement
TR23-WSU/U – Wireless Sensor only w/Setpoint Adjust/override. For replacement, No HW logo
TR24/U – 20 K ohm NTC non-linear Temperature Wall Module w/Lon Jack, Override
TR24-US/U – 20 K ohm non-linear Temperature Wall Module w/Lon Jack, Override, made in USA
WSK-24/U – Wireless Occupancy Sensor Kit with logo

Material Number	Application	Stages	Comments
T7351F2010/U	Conventional and Heat Pump systems	3 Heat / 3 Cool	Remote Temp, Outdoor, Discharge Air, Humidity, Occupancy

Commercial Thermostat Accessories

Material Number	Description	Used With	
209651A/U	Wallplate to cover marks left by other thermostats	T7350	
USB-TIM/U	USB Thermostat Interface Module cable	T7350 thermostats and TStatSpec software	

T7350 Communicating Programmable Commercial Thermostats

T7350H Communicating Thermostats control 24 Vac commercial single-zone multistage conventional, heat pump and modulating HVAC equipment. T7350H allows remote access and the sharing of system parameters with other devices in a LONWORKS® network.

- 365-day programming.
- Two Occupied and two Not Occupied periods per day.
- Thermostat Interface Module (TIM) connections to thermostat from PDA for advanced configuration, programming, keypad lockout, etc.
- Individual heat and cool setpoints available for Occupied and Not Occupied periods.
- P+I+D control minimizes temperature fluctuations.
- Recovery ramping control automatically optimizes equipment start times based on building load.
- Universal Versaguard™ Thermostat guards available.
- Convenient overrides allow temporary setpoint changes.
- Keypad multi-level lockout available with all models.
- Remote sensor capability for temperature (including outdoor air and discharge air) and humidity sensors.
- Auxiliary contact interfaces with a Honeywell Economizer System (for total rooftop control integration) or as a dehumidification output LONWORKS® network communication.

Color: Trident White

Accessories:

C7041B2005/U – 20 K ohm NTC Temperature Sensor with 6 in. insertion
C7041R2000/U – 20 K ohm NTC Type III Averaging Temperature Sensor, 12ft
H7625A2010/U – Wall Humidity Sensor, ±2% RH, Output 4-20 mA or 0-5/10 Vdc, with 20 K ohm temp
H7625B2006/U – Duct Humidity Sensor, ±2% RH, Output 4-20 mA or 0-5/10 Vdc, with 20 K ohm temp
H7635A2012/U – Wall Humidity Sensor, ± 3% RH, Output 4-20 mA or 0-5/10 Vdc, with 20 K ohm temp
H7635C1002/U – Outdoor Humidity Sensor, ± 3% RH, Output 4-20 mA or 0-5/10 Vdc
H7655A1001/U – Wall Humidity Sensor, 5% RH, 0-10 Vdc fixed output
H7655B2014/U – Duct Humidity Sensor, 5% RH, Selectable 4-20 mA or 0-5/10 Vdc, with 20 K ohm temp
T7771A1005/U – 20 K ohm NTC non-linear Temperature Wall Module
TR21/U – 20 K ohm NTC non-linear Temperature Wall Module
TR21-A/U – 10 K ohm NTC non-linear Temperature Wall Module for Averaging only
TR21-A-US/U – 10 K ohm NTC non-linear Temperature Wall Module, made in USA
TR21-H/U – 20 K ohm NTC non-linear Temperature/Humidity Wall Module w/Lon Jack
TR21-H-US/U – 20 K ohm NTC non-linear Temperature/Humidity Wall Module w/Lon Jack, made in USA
TR21-J-US/U – 20 K ohm NTC non-linear Temperature Wall Module w/ Lon Jack, made in USA
TR21-US/U – 20 K ohm NTC non-linear Temperature Wall Module, made in USA
TR22/U – 20 K ohm NTC non-linear Temperature Wall Module w/ selectable setpoint, Lon Jack
TR23/U – 20 K ohm NTC Temperature Wall Module w/selectable setpoint, Lon Jack, Override
TR23-H/U – 20 K ohm NTC Temperature/Humidity Wall Module w/ selectable setpoint, Lon Jack, Override
TR23-H-US/U – 20 K Temperature/Humidity Wall Module w/selectable setpoint/Lon Jack/Override/made in USA
TR24/U – 20 K ohm NTC non-linear Temperature Wall Module w/Lon Jack, Override
TR24-US/U – 20 K ohm non-linear Temperature Wall Module w/Lon Jack, Override, made in USA

Material Number	Application	Switch Positions (System)	Switch Positions (Fan)	Stages	Comments	Includes
T7350H1009/U	Conventional and Heat Pump systems	HEAT-OFF-COOL-AUTO-EM.HEAT	AUTO-ON	3 Heat / 3 Cool	Remote Temp, Outdoor, Discharge Air, Humidity	
T7350H1017/U	Modulating Systems	HEAT-OFF-COOL-AUTO-EM.HEAT	AUTO-ON	2 Mod (4-20mA)/ 2 Relay	Remote Temp, Outdoor, Discharge Air, Humidity and Occupancy	
Y7355H1009/U	Conventional and Heat Pump systems	HEAT-OFF-COOL-AUTO-EM.HEAT	AUTO-ON	3 Heat / 3 Cool	Remote Temp, Outdoor, Discharge Air, Humidity, Occupancy	T7350H1009, C7041B2005, T7771A1005

TB7200 Communicating Zoning Thermostat

The TB7200 Series PI thermostat is available in BACnet® MS/TP and ZigBee® wireless protocols and integrates into a WEBs-AX building automation system. Used with hydronic reheat valve control and pressure dependent VAV with or without local reheat.

- Available in BACnet MS/TP and ZigBee wireless protocols
- Fully integrated advanced occupancy functionality with a PIR cover provides energy savings opportunity on select models; all other models are PIR ready and can have an optional occupancy sensor cover added at any time
- Pre-configured sequences of operation means one model meets more application needs
- Password protection to minimize parameter tampering
- Four levels of keypad lockout to limit access to change user parameters
- Available in 24 Vac on/off, floating or 0-10 Vdc analog control to meet advanced applications requirements
- Three configurable inputs for monitoring and advanced functions
- SPST auxiliary output that can be used for lighting or reheat
- All wiring connections are made to removable terminal blocks simplifying installation.

Application: Zoning Modulating with Reheat
Display: LCD
Mounting: Vertical
Color: White
Changeover: Manual/Auto
Setting Temperature Range: Heating: 40°F to 90°F; Cooling: 54°F to 100°F (Heating: 4.5°C to 32°C; Cooling: 12.0°C to 37.5°C)
Switching Positions (System): OFF-HEAT-COOL-AUTO
Switching Positions (Fan): HI-MED-LOW-AUTO-OFF
Operating Temperature Range: 32°F to 122°F (0°C to 50°C)

Operating Humidity Range (% RH): 0 to 95% RH, non-condensing
Throttling Range: 3°F to 10°F (1.7°C to 5.6°C)
Supply Voltage: 24 Vac with range from 19 to 30 Vac
Frequency: 50 Hz; 60 Hz
Approximate, Dimensions: 4 15/16 in. high x 3 3/8 in. wide x 1 1/8 in. deep (125 mm high x 86 mm wide x 29 mm deep)
Includes: Remote Temperature Sensor Input, 2 Digital Inputs; 1 Universal Input; 1 Aux Output
Used With: Compatible with WEBs-AX

Material Number	Network Communications	Output Signal	Output Signal Burden	Output	Occupancy Sensor
TB7200C5014B/U	BACnet MS/TP	Floating or On/Off	30 Vac, 1A max, 3A in-rush	2 Floating or On/Off +1 Aux	Upgradeable with PIR occupancy sensor cover TB-PIR-ZN
TB7200C5014W/U	ZigBee Wireless Mesh	Floating or On/Off	30 Vac, 1A max, 3A in-rush	2 Floating or On/Off +1 Aux	Upgradeable with PIR occupancy sensor cover TB-PIR-ZN
TB7200C5514B/U	BACnet MS/TP	Floating or On/Off	30 Vac, 1A max, 3A in-rush	2 Floating or On/Off +1 Aux	Onboard PIR occupancy sensor cover
TB7200C5514W/U	ZigBee Wireless Mesh	Floating or On/Off	30 Vac, 1A max, 3A in-rush	2 Floating or On/Off +1 Aux	Onboard PIR occupancy sensor cover
TB7200F5014B/U	BACnet MS/TP	0 - 10 Vdc	0 - 10 Vdc into 2k Ohm resistance min.	2 0 - 10 Vdc +1 Aux	Upgradeable with PIR occupancy sensor cover TB-PIR-ZN
TB7200F5014W/U	ZigBee Wireless Mesh	0 - 10 Vdc	0 - 10 Vdc into 2k Ohm resistance min.	2 0 - 10 Vdc +1 Aux	Upgradeable with PIR occupancy sensor cover TB-PIR-ZN
TB7200F5514B/U	BACnet MS/TP	0 - 10 Vdc	0 - 10 Vdc into 2k Ohm resistance min.	2 0 - 10 Vdc +1 Aux	Onboard PIR occupancy sensor cover
TB7200F5514W/U	ZigBee Wireless Mesh	0 - 10 Vdc	0 - 10 Vdc into 2k Ohm resistance min.	2 0 - 10 Vdc +1 Aux	Onboard PIR occupancy sensor cover

TB7300 Series Communicating Digital Fan Coil Thermostats

BACnet & ZigBee Wireless Mesh Communicating Thermostats

- Available in BACnet MS/TP protocol
- Backlit LCD display with dedicated function menu keys for simple operation
- Fully integrated advanced occupancy functionality with a PIR cover provides energy savings opportunity on select models; all other models are PIR ready and can have an optional occupancy sensor cover added
- Configurable sequences of operation
- Configurable fan button allows thermostat to meet more applications with a single model
- Password protection to minimize parameter tampering
- Six levels of keypad lockout to limit access to change user parameters
- 3-speed fan control
- Auto Fan speed mode increases occupant comfort in cooling mode by reducing humidity and reduces fan noise
- Available for 24 Vac on/off, floating or analog control meets advanced applications requirements
- Three inputs for monitoring and other advanced functions
- SPST auxiliary output that can be used for lighting or auxiliary reheat
- All wiring connections are made to removable terminal blocks simplifying installation.

Display: LCD
Mounting: Vertical
Color: White
Changeover: Manual/Auto
Setting Temperature Range: Heating: 40°F to 90°F; Cooling: 54°F to 100°F (Heating: 4.5°C to 32°C; Cooling: 12.0°C to 37.5°C)
Switching Positions (System): OFF-HEAT-COOL-AUTO
Switching Positions (Fan): HI-MED-LOW-AUTO-OFF
Operating Temperature Range: 32°F to 122°F (0°C to 50°C)
Operating Humidity Range (% RH): 0 to 95% RH, non-condensing
Supply Voltage: 24 Vac with range from 19 to 30 Vac
Frequency: 50 Hz; 60 Hz
Electrical Ratings: Fan relay output: 30 Vac, 1A max, 3A in-rush; and Valve triac output: 30 Vac, 1A max, 3A in-rush
Approximate, Dimensions: 4 15/16 in. high x 3 3/8 in. wide x 1 1/8 in. deep (125 mm high x 86 mm wide x 29 mm deep)
Includes: Remote Temperature Sensor Input, 2 Digital Inputs; 1 Universal Input; 1 Aux Output
Approvals, CSA: Certified
Approvals, FCC: FCC Part 15, Subpart B, Class A
Approvals, Underwriters Laboratories Inc.: UL-873
Used With: Compatible with WEBs-AX

Material Number	Application	Electrical Ratings	Network Communications	Output	Occupancy Sensor
TB7300A5014B/U	2 or 4 Pipe On/Off Fan Coil, 24 Vac, Commercial	Fan relay output: 30 Vac, 1A max, 3A in-rush; and Valve triac output: 30 Vac, 1A max, 3A in-rush	BACnet MS/TP	2 Digital +1 Aux	Upgradeable with PIR occupancy sensor cover TB-PIR-FCU-C
TB7300A5514B/U	2 or 4 Pipe On/Off Fan Coil, 24 Vac, Commercial	Fan relay output: 30 Vac, 1A max, 3A in-rush; and Valve triac output: 30 Vac, 1A max, 3A in-rush	BACnet MS/TP	2 Digital +1 Aux	Onboard PIR occupancy sensor cover
TB7300C5014B/U	2 or 4 Pipe On/Off or Floating Fan Coil, 24 Vac, Commercial	Fan relay output: 30 Vac, 1A max, 3A in-rush; and Valve triac output: 30 Vac, 1A max, 3A in-rush	BACnet MS/TP	2 Floating +1 Aux	Upgradeable with PIR occupancy sensor cover TB-PIR-RTU
TB7300C5514B/U	2 or 4 Pipe On/Off or Floating Fan Coil, 24 Vac, Commercial	Fan relay output: 30 Vac, 1A max, 3A in-rush; and Valve triac output: 30 Vac, 1A max, 3A in-rush	BACnet MS/TP	2 Floating +1 Aux	Onboard PIR occupancy sensor cover
TB7300F5014B/U	2 or 4 Pipe Analog Fan Coil, 24 Vac, Commercial	Fan relay output: 30 Vac, 1A max, 3A in-rush; Valve analog output: 0 to 10 Vdc into 2KW resistance min.	BACnet MS/TP	2 Analog +1 Aux	Upgradeable with PIR occupancy sensor cover TB-PIR-FCU-C
TB7300F5514B/U	2 or 4 Pipe Analog Fan Coil, 24 Vac, Commercial	Fan relay output: 30 Vac, 1A max, 3A in-rush; Valve analog output: 0 to 10 Vdc into 2KW resistance min.	BACnet MS/TP	2 Analog +1 Aux	Onboard PIR occupancy sensor cover
TB7305A5014B/U	2 or 4 Pipe On/Off Fan Coil, 24 Vac, Lodging	Fan relay output: 30 Vac, 1A max, 3A in-rush; and Valve triac output: 30 Vac, 1A max, 3A in-rush	BACnet MS/TP	2 Digital +1 Aux	Upgradeable with PIR occupancy sensor cover TB-PIR-FCU-L
TB7305A5514B/U	2 or 4 Pipe On/Off Fan Coil, 24 Vac, Lodging	Fan relay output: 30 Vac, 1A max, 3A in-rush; and Valve triac output: 30 Vac, 1A max, 3A in-rush	BACnet MS/TP	2 Digital +1 Aux	Onboard PIR occupancy sensor cover
TB7305C5014B/U	2 or 4 Pipe On/Off or Floating Fan Coil, 24 Vac, Lodging	Fan relay output: 30 Vac, 1A max, 3A in-rush; and Valve triac output: 30 Vac, 1A max, 3A in-rush	BACnet MS/TP	2 Floating +1 Aux	Upgradeable with PIR occupancy sensor cover TB-PIR-RTU
TB7305C5514B/U	2 or 4 Pipe On/Off or Floating Fan Coil, 24 Vac, Lodging	Fan relay output: 30 Vac, 1A max, 3A in-rush; and Valve triac output: 30 Vac, 1A max, 3A in-rush	BACnet MS/TP	2 Digital +1 Aux	Onboard PIR occupancy sensor cover
TB7305F5014B/U	2 or 4 Pipe Analog Fan Coil, 24 Vac, Lodging	Fan relay output: 30 Vac, 1A max, 3A in-rush; Valve analog output: 0 to 10 Vdc into 2KW resistance min.	BACnet MS/TP	2 Analog +1 Aux	Upgradeable with PIR occupancy sensor cover TB-PIR-FCU-L
TB7305F5514B/U	2 or 4 Pipe Analog Fan Coil, 24 Vac, Lodging, PIR	Fan relay output: 30 Vac, 1A max, 3A in-rush; Valve analog output: 0 to 10 Vdc into 2KW resistance min.	BACnet MS/TP	2 Analog +1 Aux	Onboard PIR occupancy sensor cover

TB7600 Communicating Commercial Thermostats

The TB7600 Series PI thermostat is available in BACnet® MS/TP and ZigBee® and integrates into a WEBs-AX automation. It features a menu-driven, back-lit LCD display, up to three sensor inputs, an auxiliary output, and one or two digital inputs.

- Available in BACnet MS/TP and ZigBee wireless protocols
- Built in default profile set-up for easier start up and commissioning
- Fully integrated advanced occupancy functionality with a PIR accessory cover on some models
- Programmable smart fan operation
- Password protection to minimize parameter tampering
- Three levels of keypad lockout
- Gas/oil or electric system compatibility for all type of applications
- SPST auxiliary output can be used for lighting and/or economizer override
- 0 to 10 Vdc economizer output for more retrofit opportunities
- Automatic frost protection to prevents costly freeze damage
- Anti short cycle and minimum on/off run time protection to reduce wear and maximizes life span of mechanical equipment
- One or two programmable digital inputs for added flexibility can be use to monitor filter status, activate a remote temporary occupancy switch, and/or used as a general purpose service indicator
- Heat Pump models support single and two stages heat pump with one auxiliary heat stage, selectable single or dual stage compressor stages, and comfort/economy mode maximizes heat pump use before turning on auxiliary heating, compressor/auxiliary interlock adds flexibility by locking out heat pump operation during auxiliary heating to prevent high pressure trip when the coil is downstream of the auxiliary heat source
- 7 day programmable models, 2 or 4 events for use in non-networked applications.

Display: LCD
Mounting: Vertical
Color: White
Switch Positions (System): Conventional Systems - HEAT-OFF-COOL-AUTO; Heat Pump Systems - HEAT-OFF-COOL-AUTO-EM. HEAT
Switch Positions (Fan): ON-SMART-AUTO
Setting Temperature Range: Heating: 40°F to 90°F; Cooling: 54°F to 100°F (Heating: 4.5°C to 32°C; Cooling: 12.0°C to 37.5°C)

Operating Temperature Range: 32°F to 122°F (0°C to 50°C)
Operating Humidity Range (% RH): 0 to 95% RH, non-condensing
Supply Voltage: 24 Vac with range from 19 to 30 Vac
Frequency: 50 Hz; 60 Hz
Approximate, Dimensions: 4 15/16 in. high x 3 3/8 in. wide x 1 1/8 in. deep (125 mm high x 86 mm wide x 29 mm deep)
Approvals, CSA: Certified
Approvals, Underwriters Laboratories Inc.: UL-873
Used With: Compatible with WEBs-AX

Material Number	Stages	Network Communications	Occupancy Sensor	Scheduling	Application	Approvals, FCC	Includes
TB7600A5014B/U	1 Heat / 1 Cool	BACnet MS/TP	Upgradeable with PIR occupancy sensor cover TB-PIR-RTU		Conventional systems	FCC Part 15, Subpart B, Class A	Remote Temperature Sensor, Outdoor Air Sensor & Mixed Air Sensor Inputs; 2 Digital Inputs; 1 Aux Output
TB7600A5014W/U	1 Heat / 1 Cool	ZigBee Wireless	Upgradeable with PIR occupancy sensor cover TB-PIR-RTU		Conventional systems	FCC Part 15, Subpart C	Remote Temperature Sensor, Outdoor Air Sensor & Mixed Air Sensor Inputs; 2 Digital Inputs; 1 Aux Output
TB7600A5514B/U	1 Heat / 1 Cool	BACnet MS/TP	Onboard PIR occupancy sensor cover		Conventional systems	FCC Part 15, Subpart B, Class A	Remote Temperature Sensor, Outdoor Air Sensor & Mixed Air Sensor Inputs; 2 Digital Inputs; 1 Aux Output
TB7600A5514W/U	1 Heat / 1 Cool	ZigBee Wireless	Onboard PIR occupancy sensor cover		Conventional systems	FCC Part 15, Subpart C	Remote Temperature Sensor, Outdoor Air Sensor & Mixed Air Sensor Inputs; 2 Digital Inputs; 1 Aux Output
TB7600B5014B/U	2 Heat / 2 Cool	BACnet MS/TP	Upgradeable with PIR occupancy sensor cover TB-PIR-RTU		Conventional systems	FCC Part 15, Subpart B, Class A	Remote Temperature Sensor, Outdoor Air Sensor & Mixed Air Sensor Inputs; 2 Digital Inputs; 1 Aux Output
TB7600B5014W/U	2 Heat / 2 Cool	ZigBee Wireless	Upgradeable with PIR occupancy sensor cover TB-PIR-RTU		Conventional systems	FCC Part 15, Subpart C	Remote Temperature Sensor, Outdoor Air Sensor & Mixed Air Sensor Inputs; 2 Digital Inputs; 1 Aux Output
TB7600B5514B/U	2 Heat / 2 Cool	BACnet MS/TP	Onboard PIR occupancy sensor cover		Conventional systems	FCC Part 15, Subpart B, Class A	Remote Temperature Sensor, Outdoor Air Sensor & Mixed Air Sensor Inputs; 2 Digital Inputs; 1 Aux Output
TB7600B5514W/U	2 Heat / 2 Cool	ZigBee Wireless	Onboard PIR occupancy sensor cover		Conventional systems	FCC Part 15, Subpart C	Remote Temperature Sensor, Outdoor Air Sensor & Mixed Air Sensor Inputs; 2 Digital Inputs; 1 Aux Output
TB7600H5014B/U	3 Heat / 2 Cool	BACnet MS/TP	Upgradeable with PIR occupancy sensor cover TB-PIR-RTU		Heat Pump Systems	FCC Part 15, Subpart B, Class A	Remote Temperature Sensor, Outdoor Air Sensor & Mixed Air Sensor Inputs; 2 Digital Inputs; 1 Aux Output
TB7600H5014W/U	3 Heat / 2 Cool	ZigBee Wireless	Upgradeable with PIR occupancy sensor cover TB-PIR-RTU		Heat Pump Systems	FCC Part 15, Subpart C	Remote Temperature Sensor, Outdoor Air Sensor & Mixed Air Sensor Inputs; 2 Digital Inputs; 1 Aux Output
TB7600H5514B/U	3 Heat / 2 Cool	BACnet MS/TP	Onboard PIR occupancy sensor cover		Heat Pump Systems	FCC Part 15, Subpart B, Class A	Remote Temperature Sensor, Outdoor Air Sensor & Mixed Air Sensor Inputs; 2 Digital Inputs; 1 Aux Output
TB7600H5514W/U	3 Heat / 2 Cool	ZigBee Wireless	Onboard PIR occupancy sensor cover		Heat Pump Systems	FCC Part 15, Subpart C	Remote Temperature Sensor, Outdoor Air Sensor & Mixed Air Sensor Inputs; 2 Digital Inputs; 1 Aux Output
TB7605B5014B/U	2 Heat / 2 Cool	BACnet MS/TP	Upgradeable with PIR occupancy sensor cover TB-PIR-RTU		Conventional systems	FCC Part 15, Subpart B, Class A	Remote Temperature Sensor, Outdoor Air Sensor & Mixed Air Sensor Inputs; 2 Digital Inputs; 1 Aux Output

Material Number	Stages	Network Communications	Occupancy Sensor	Scheduling	Application	Approvals, FCC	Includes
TB7605B5014W/U	2 Heat / 2 Cool	ZigBee Wireless	Upgradeable with PIR occupancy sensor cover TB-PIR-RTU		Conventional systems	FCC Part 15, Subpart C	Remote Temperature Sensor, Outdoor Air Sensor & Mixed Air Sensor Inputs; 2 Digital Inputs; 1 Aux Output
TB7605B5514B/U	2 Heat / 2 Cool	BACnet MS/TP	Onboard PIR occupancy sensor cover		Conventional systems	FCC Part 15, Subpart B, Class A	Remote Temperature Sensor, Outdoor Air Sensor & Mixed Air Sensor Inputs; 2 Digital Inputs; 1 Aux Output
TB7605B5514W/U	2 Heat / 2 Cool	ZigBee Wireless	Onboard PIR occupancy sensor cover		Conventional systems	FCC Part 15, Subpart C	Remote Temperature Sensor, Outdoor Air Sensor & Mixed Air Sensor Inputs; 2 Digital Inputs; 1 Aux Output
TB7652A5014B/U	1 Heat / 1 Cool	BACnet MS/TP	Upgradeable with PIR occupancy sensor cover TB-PIR-RTU	7-day programmable	Conventional systems	FCC Part 15, Subpart B, Class A	Remote Temperature Sensor, Outdoor Air Sensor & Mixed Air Sensor Inputs; 2 Digital Inputs; 1 Aux Output
TB7652A5014W/U	1 Heat / 1 Cool	ZigBee Wireless	Upgradeable with PIR occupancy sensor cover TB-PIR-RTU	7-day programmable	Conventional systems	FCC Part 15, Subpart C	Remote Temperature Sensor, Outdoor Air Sensor & Mixed Air Sensor Inputs; 2 Digital Inputs; 1 Aux Output
TB7652A5514B/U	1 Heat / 1 Cool	BACnet MS/TP	Onboard PIR occupancy sensor cover	7-day programmable	Conventional systems	FCC Part 15, Subpart B, Class A	Remote Temperature Sensor, Outdoor Air Sensor & Mixed Air Sensor Inputs; 2 Digital Inputs; 1 Aux Output
TB7652A5514W/U	1 Heat / 1 Cool	ZigBee Wireless	Onboard PIR occupancy sensor cover	7-day programmable	Conventional systems	FCC Part 15, Subpart C	Remote Temperature Sensor, Outdoor Air Sensor & Mixed Air Sensor Inputs; 2 Digital Inputs; 1 Aux Output
TB7652B5014B/U	2 Heat / 2 Cool	BACnet MS/TP	Upgradeable with PIR occupancy sensor cover TB-PIR-RTU	7-day programmable	Conventional systems	FCC Part 15, Subpart B, Class A	Remote Temperature Sensor, Outdoor Air Sensor & Mixed Air Sensor Inputs; 2 Digital Inputs; 1 Aux Output
TB7652B5014W/U	2 Heat / 2 Cool	ZigBee Wireless	Upgradeable with PIR occupancy sensor cover TB-PIR-RTU	7-day programmable	Conventional systems	FCC Part 15, Subpart C	Remote Temperature Sensor, Outdoor Air Sensor & Mixed Air Sensor Inputs; 2 Digital Inputs; 1 Aux Output
TB7652B5514B/U	2 Heat / 2 Cool	BACnet MS/TP	Onboard PIR occupancy sensor cover	7-day programmable	Conventional systems	FCC Part 15, Subpart B, Class A	Remote Temperature Sensor, Outdoor Air Sensor & Mixed Air Sensor Inputs; 2 Digital Inputs; 1 Aux Output
TB7652B5514W/U	2 Heat / 2 Cool	ZigBee Wireless	Onboard PIR occupancy sensor cover	7-day programmable	Conventional systems	FCC Part 15, Subpart C	Remote Temperature Sensor, Outdoor Air Sensor & Mixed Air Sensor Inputs; 2 Digital Inputs; 1 Aux Output
TB7652H5014B/U	3 Heat / 2 Cool	BACnet MS/TP	Upgradeable with PIR occupancy sensor cover TB-PIR-RTU	7-day programmable	Heat Pump Systems	FCC Part 15, Subpart B, Class A	Remote Temperature Sensor, Outdoor Air Sensor & Mixed Air Sensor Inputs; 2 Digital Inputs; 1 Aux Output
TB7652H5014W/U	3 Heat / 2 Cool	ZigBee Wireless	Upgradeable with PIR occupancy sensor cover TB-PIR-RTU	7-day programmable	Heat Pump Systems	FCC Part 15, Subpart C	Remote Temperature Sensor, Outdoor Air Sensor & Mixed Air Sensor Inputs; 2 Digital Inputs; 1 Aux Output
TB7652H5514B/U	3 Heat / 2 Cool	BACnet MS/TP	Onboard PIR occupancy sensor cover	7-day programmable	Heat Pump Systems	FCC Part 15, Subpart B, Class A	Remote Temperature Sensor, Outdoor Air Sensor & Mixed Air Sensor Inputs; 2 Digital Inputs; 1 Aux Output
TB7652H5514W/U	3 Heat / 2 Cool	ZigBee Wireless	Onboard PIR occupancy sensor cover	7-day programmable	Heat Pump Systems	FCC Part 15, Subpart C	Remote Temperature Sensor, Outdoor Air Sensor & Mixed Air Sensor Inputs; 2 Digital Inputs; 1 Aux Output
TB7656B5014B/U	2 Heat / 2 Cool	BACnet MS/TP	Upgradeable with PIR occupancy sensor cover TB-PIR-RTU	7-day programmable	Conventional systems	FCC Part 15, Subpart B, Class A	Remote Temperature Sensor, Outdoor Air Sensor & Mixed Air Sensor Inputs; 2 Digital Inputs; 1 Aux Output
TB7656B5014W/U	2 Heat / 2 Cool	ZigBee Wireless	Upgradeable with PIR occupancy sensor cover TB-PIR-RTU	7-day programmable	Conventional systems	FCC Part 15, Subpart C	Remote Temperature Sensor, Outdoor Air Sensor & Mixed Air Sensor Inputs; 2 Digital Inputs; 1 Aux Output
TB7656B5514B/U	2 Heat / 2 Cool	BACnet MS/TP	Onboard PIR occupancy sensor cover	7-day programmable	Conventional systems	FCC Part 15, Subpart B, Class A	Remote Temperature Sensor, Outdoor Air Sensor & Mixed Air Sensor Inputs; 2 Digital Inputs; 1 Aux Output
TB7656B5514W/U	2 Heat / 2 Cool	ZigBee Wireless	Onboard PIR occupancy sensor cover	7-day programmable	Conventional systems	FCC Part 15, Subpart C	Remote Temperature Sensor, Outdoor Air Sensor & Mixed Air Sensor Inputs; 2 Digital Inputs; 1 Aux Output

Commercial Communicating Thermostats Accessories

Material Number	Description	
TB-RA-1014/U	WEBs-AX ZigBee Wireless Communication Card Remote Antenna	
TB-RP5000W/U	ZigBee Wireless Repeater for TB7200 and TB7600 Series Wireless Communicating Thermostat Networks	
TB-VWG-APP-1014/U	WEBs-AX ZigBee Wireless Communication Card for TB7200 and TB7600 Series Wireless Communicating Thermostat Networks	

TB7200 Communicating Zoning Thermostat Accessories

Material Number	Description	
TB-PIR-ZN/U	TB7200 Communicating Zoning Thermostat PIR Occupancy Sensor Cover	

TB7300 Series Communicating Digital Fan Coil Thermostat Accessories

Material Number	Description	
TB-PIR-FCU-C/U	TB7300 Fan Coil Thermostat PIR Occupancy Sensor Cover for Commercial Models	
TB-PIR-FCU-L/U	TB7300 Fan Coil Thermostat PIR Occupancy Sensor Cover for Lodging Models	

TB7600 Communicating RTU/Heat Pump Thermostat Accessories

Material Number	Description	Used With	
TB-PIR-RTU/U	TB7600 Series RTU/Heat Pump Thermostat PIR Occupancy Sensor Cover	TB7600 Series RTU/Heat Pump Thermostats	
TBST-5014W/U	ZigBee Wireless Survey Tool kit for TB7200 and TB7600 Series Wireless Communicating Thermostat Networks	TB7200, TB7600 Series Wireless Communicating Thermostats	

VRN Threaded Pressure Independent Control Valves

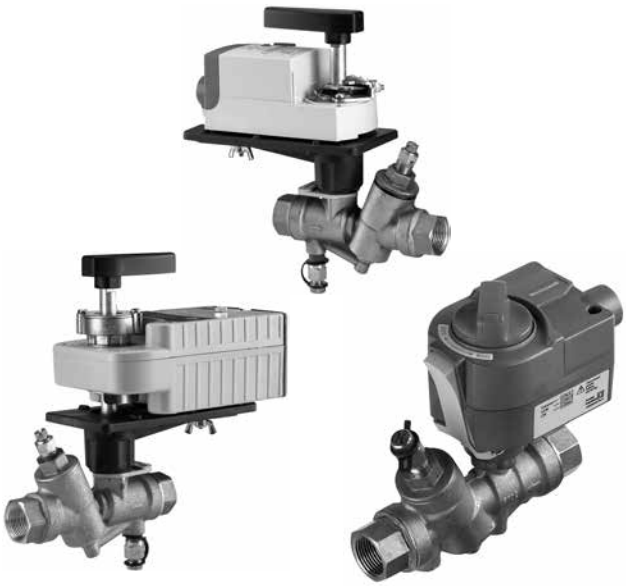

The VRN series pressure independent control valves maintain the desired flow rate of hot water or chilled water in closed loop hydronic systems, with ±5% accuracy, irrespective of pressure drop fluctuations (within the published pressure drop range). The built-in differential pressure regulator makes this possible, eliminating control system "hunting", even at low coil flow. The regulator virtually eliminates the risk of cavitation in the valve, and decimates the effects of piping geometry, from components such as reducers and elbows, to negligible levels.

Pressure independent control valves are sized to match design coil flow, while eliminating the need for balancing valves to balance the system. They allow coils in terminal unit reheat and chillers alike to be operated at maximum efficiency at most load conditions.

- Available in sizes from 1/2 in. to 3 in. with female NPT connections
- Regulated flow rates available from 1 to 95 gpm, with multiple flow rates per valve size
- Differential pressure regulator for constant pressure drop across valve seat
- Positive pressure, rolling diaphragm regulator design for long service life
- Patented ball seals require low operating torque
- Nickel-chrome plated brass, or stainless steel trim
- Factory installed actuators with and without fail-safe
- Upstream Test Port included
- Three actuator mounting orientations possible for installation space considerations

Dimensions in inches (millimeters)

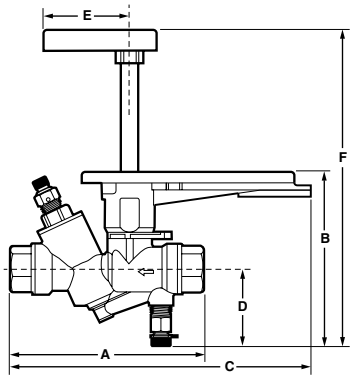

VALVE SIZE (IN.)	DIMENSIONS IN INCHES (MM)						
	A	B	C	D	E	F_Z [a]	F_S [a]
1/2	5-11/16 (145)	4-5/16 (109)	8-19/32 (218)	1 (26)	2-1/2 (64)	8-13/32 (213)	7-3/16 (182)
3/4							
1	5-29/32 (150)		8-45/64 (221)				
	9 (229)	4-19/32 (117)	10-57/64 (277)	1-5/8 (41)		9-13/32 (239)	8-3/16 (207)
1-1/4	8-3/32 (213)		10-19/32 (269)				
1-1/2	8-3/16 (208)		10-1/2 (267)				
	10 (254)	5-3/16 (132)	12-3/32 (307)	2-3/32 (53)		10-13/32 (264)	9-3/16 (232)
2	9-29/32 (251)		12 (305)				
2-1/2	10-9/32 (263)		12-3/16 (310)				
3	10-13/16 (274)		12-13/32 (314)				

[a] LONG SHAFT SUPPLIED WITH "ZELIX" (Z) DIRECT COUPLED ACTUATORS; SHORT SHAFT SUPPLIED WITH "SALT" (S) NON-SPRING RETURN DCAS.

M31310A

Valve Type: Pressure Independent Control Valve
Body Pattern: 2-way, straight-through
Flow Characteristic: Equal Percentage with flow control insert
Connection Type: Female-NPT
Controlled Medium: Chilled or hot water with up to 50% Glycol; not for use with steam or fuels
Valve Action: Quarter-turn rotary
Maximum Safe Operating Pressure: 360 psi (2500 kPa)
Maximum Safe Operating Temperature: 248°F (120°C)
Maximum Close-off Pressure: 100 psid (690 kPa)
Fluid Temperature Range: -22°F to +250°F (-30°C to +121°C)
Ambient Temperature Range: 14°F to 131°F (-10°C to 55°C)
Accuracy: (±5% over specified pressure range)
Stem Travel: 90 deg. rotation
Materials
(Body): Forged Brass ASTM B584
(Stem): See table
(Seat): Teflon seals / EPDM O-rings
(Regulator): Stainless Steel
(Plug/Ball/Disc): See table
(Packing: Teflon seals / EPDM O-rings
(Diaphragm): Hydrogenated Acrylonitrile Butadiene Rubber

Valve Specification				Valve Trim	Plated Brass	Stainless Steel	Plated Brass	Stainless Steel
Valve Size (inches)	Max. gpm	Differential Pressure, psid			Valve Body Model Number			
		Min	Max	Close-off				
1/2"	1	3	35	100	VRN2A001.00PA	VRN2A001.00SA	VRN2A001.00PX	VRN2A001.00SX
	2				VRN2A002.00PA	VRN2A002.00SA	VRN2A002.00PX	VRN2A002.00SX
	3				VRN2A003.00PA	VRN2A003.00SA	VRN2A003.00PX	VRN2A003.00SX
	4				VRN2A004.00PA	VRN2A004.00SA	VRN2A004.00PX	VRN2A004.00SX
	5				VRN2A005.00PA	VRN2A005.00SA	VRN2A005.00PX	VRN2A005.00SX
	6				VRN2A006.00PA	VRN2A006.00SA	VRN2A006.00PX	VRN2A006.00SX
	7				VRN2A007.00PA	VRN2A007.00SA	VRN2A007.00PX	VRN2A007.00SX
3/4"	1	3	35	100	VRN2B001.00PA	VRN2B001.00SA	VRN2B001.00PX	VRN2B001.00SX
	2				VRN2B002.00PA	VRN2B002.00SA	VRN2B002.00PX	VRN2B002.00SX
	3				VRN2B003.00PA	VRN2B003.00SA	VRN2B003.00PX	VRN2B003.00SX
	4				VRN2B004.00PA	VRN2B004.00SA	VRN2B004.00PX	VRN2B004.00SX
	5				VRN2B005.00PA	VRN2B005.00SA	VRN2B005.00PX	VRN2B005.00SX
	6				VRN2B006.00PA	VRN2B006.00SA	VRN2B006.00PX	VRN2B006.00SX
	7				VRN2B007.00PA	VRN2B007.00SA	VRN2B007.00PX	VRN2B007.00SX
	8	6			VRN2B008.00PA	VRN2B008.00SA	VRN2B008.00PX	VRN2B008.00SX
	9				VRN2B009.00PA	VRN2B009.00SA	VRN2B009.00PX	VRN2B009.00SX
	10				VRN2B010.00PA	VRN2B010.00SA	VRN2B010.00PX	VRN2B010.00SX
1"	1	3	35	100	VRN2C001.00PA	VRN2C001.00SA	VRN2C001.00PX	VRN2C001.00SX
	2				VRN2C002.00PA	VRN2C002.00SA	VRN2C002.00PX	VRN2C002.00SX
	3				VRN2C003.00PA	VRN2C003.00SA	VRN2C003.00PX	VRN2C003.00SX
	4				VRN2C004.00PA	VRN2C004.00SA	VRN2C004.00PX	VRN2C004.00SX
	5				VRN2C005.00PA	VRN2C005.00SA	VRN2C005.00PX	VRN2C005.00SX
	6				VRN2C006.00PA	VRN2C006.00SA	VRN2C006.00PX	VRN2C006.00SX
	7				VRN2C007.00PA	VRN2C007.00SA	VRN2C007.00PX	VRN2C007.00SX
	8	6			VRN2C008.00PA	VRN2C008.00SA	VRN2C008.00PX	VRN2C008.00SX
	9				VRN2C009.00PA	VRN2C009.00SA	VRN2C009.00PX	VRN2C009.00SX
	10	3	50		VRN2C010.00PA	VRN2C010.00SA	VRN2C010.00PX	VRN2C010.00SX
	15				VRN2C015.00PA	VRN2C015.00SA	VRN2C015.00PX	VRN2C015.00SX
	20	4			VRN2C020.00PA	VRN2C020.00SA	VRN2C020.00PX	VRN2C020.00SX
1-1/4"	10	3	50	100	VRN2D010.00PA	VRN2D010.00SA	VRN2D010.00PX	VRN2D010.00SX
	15				VRN2D015.00PA	VRN2D015.00SA	VRN2D015.00PX	VRN2D015.00SX
	20	4			VRN2D020.00PA	VRN2D020.00SA	VRN2D020.00PX	VRN2D020.00SX
	25	5			VRN2D025.00PA	VRN2D025.00SA	VRN2D025.00PX	VRN2D025.00SX
	30				VRN2D030.00PA	VRN2D030.00SA	VRN2D030.00PX	VRN2D030.00SX
	35	6.5	58		VRN2D035.00PA	VRN2D035.00SA	VRN2D035.00PX	VRN2D035.00SX

Actuator Features					
MVN					Standard Profile
Actuator Type	Control Signal	Timing	Voltage	Enclosure	Actuator Model Number
Fail-in-Place	Floating	90 sec.	24 VAC	NEMA 2 IP 54	+MVN613A0000
	Fast SPDT	30 sec.	24 VAC/DC		+MVN643A0000
	Modulating	90 sec.	24 VAC/DC		+MVN713A0000
Accessories	1 meter cable				+C1

Pressure Independent Control Valves

Valve Specification				Valve Trim	Plated Brass	Stainless Steel
Valve Size (inches)	Max. gpm	Differential Pressure, psid			Valve Body Model Number	
		Min	Max	Close-off		
1-1/2"	10	3	50	100	VRN2E010.00PX	VRN2E010.00SX
	15				VRN2E015.00PX	VRN2E015.00SX
	20	4			VRN2E020.00PX	VRN2E020.00SX
	25	5			VRN2E025.00PX	VRN2E025.00SX
	30		58		VRN2E030.00PX	VRN2E030.00SX
	35	4			VRN2E035.00PX	VRN2E035.00SX
	40	6			VRN2E040.00PX	VRN2E040.00SX
	45				VRN2E045.00PX	VRN2E045.00SX
	50				VRN2E050.00PX	VRN2E050.00SX
2"	25	4	58	100	VRN2F025.00PX	VRN2F025.00SX
	30				VRN2F030.00PX	VRN2F030.00SX
	35				VRN2F035.00PX	VRN2F035.00SX
	40	6			VRN2F040.00PX	VRN2F040.00SX
	45				VRN2F045.00PX	VRN2F045.00SX
	50				VRN2F050.00PX	VRN2F050.00SX
	55	7			VRN2F055.00PX	VRN2F055.00SX
	60				VRN2F060.00PX	VRN2F060.00SX
	65				VRN2F065.00PX	VRN2F065.00SX
	70				VRN2F070.00PX	VRN2F070.00SX
	75				VRN2F075.00PX	VRN2F075.00SX
2-1/2"	25	4	58	100	VRN2G025.00PX	VRN2G025.00SX
	30				VRN2G030.00PX	VRN2G030.00SX
	35				VRN2G035.00PX	VRN2G035.00SX
	40	6			VRN2G040.00PX	VRN2G040.00SX
	45				VRN2G045.00PX	VRN2G045.00SX
	50				VRN2G050.00PX	VRN2G050.00SX
	55	7			VRN2G055.00PX	VRN2G055.00SX
	60				VRN2G060.00PX	VRN2G060.00SX
	65				VRN2G065.00PX	VRN2G065.00SX
	70				VRN2G070.00PX	VRN2G070.00SX
	75				VRN2G075.00PX	VRN2G075.00SX
	80	10			VRN2G080.00PX	VRN2G080.00SX
	85				VRN2G085.00PX	VRN2G085.00SX
	95	12			VRN2G095.00PX	VRN2G095.00SX
3"	25	4	58	100	VRN2H025.00PX	VRN2H025.00SX
	30				VRN2H030.00PX	VRN2H030.00SX
	35				VRN2H035.00PX	VRN2H035.00SX
	40	6			VRN2H040.00PX	VRN2H040.00SX
	45				VRN2H045.00PX	VRN2H045.00SX
	50				VRN2H050.00PX	VRN2H050.00SX
	55	7			VRN2H055.00PX	VRN2H055.00SX
	60				VRN2H060.00PX	VRN2H060.00SX
	65				VRN2H065.00PX	VRN2H065.00SX
	70				VRN2H070.00PX	VRN2H070.00SX
	75				VRN2H075.00PX	VRN2H075.00SX
	80	10			VRN2H080.00PX	VRN2H080.00SX
	85				VRN2H085.00PX	VRN2H085.00SX
	95	12			VRN2H095.00PX	VRN2H095.00SX

Actuator Features					
Direct Coupled Actuators					
Actuator Type	**Control Signal**	**Timing**	**Voltage**	**Enclosure**	**Model Number**
Fail-in-Place	Floating	95 sec.	24 VAC/DC	NEMA 2	+MN6105A1011
Fail-in-Place	Modulating, Floating	95 sec.			+MN7505A2001
Fail Safe	Modulating, Floating	95 sec.			+MS7505A2030
Fail Safe	1 meter cable	95 sec.			+MS8105A1030
Fail Safe Position (MS actuators only - open, closed, A-AB, B-AB)	FSO - Fail Safe Open FSC - Fail Safe Closed				FSO or FSC
Accessories					+3R

Replacement Stem Assemblies for VRN Valves

Pipe Size		Valve Code	Max GPM Flow Rating	Replacement Stem Assembly *
In.	DN			
1/2	15	VRN2A	1, 2, 3, 4, 5, 6, 7	5112-19, 5112-22 (SS)
3/4	20	VRN2B	1, 2, 3, 4, 5, 6, 7, 8, 9, 10	
1	25	VRN2C	1, 2, 3, 4, 5, 6, 7, 8, 9, 10, 15	
			20	5112-20, 5112-23 (SS)
1-1/4	32	VRN2D	10, 15, 20, 25, 30, 35	
1-1/2	40	VRN2E	10, 15, 20, 25, 30, 35	
			40, 45, 50	5112-21, 5112-24 (SS)
2	50	VRN2F	25, 30, 35, 40, 45, 50, 55, 60, 65, 70, 75	
2-1/2	65	VRN2G	25, 30, 35, 40, 45, 50, 55, 60, 65, 70, 75, 80, 85, 95	
3	80	VRN2H	25, 30, 35, 40, 45, 50, 55, 60, 65, 70, 75, 80, 85, 95	

* Replacement stems available in brass or stainless steel — use accordingly to valve part number.

Replacement Regulators for VRN Valves

Pipe Size		Valve Code	Max GPM Flow Rating	Replacement Regulator	Max GPM Flow Rating	Replacement Regulator
In.	DN					
1/2	15	VRN2A	1, 2, 3	8615-100	4, 5, 6, 7	8615-101
3/4	20	VRN2B	1, 2, 3		4, 5, 6, 7, 8, 9, 10	
1	25	VRN2C	1, 2, 3		4, 5, 6, 7, 8, 9	
			10, 15, 20	8615-102		
1-1/4	32	VRN2D	10, 15, 20, 25, 30, 35			
1-1/2	40	VRN2E	10, 15, 20, 25, 30			
			35, 40, 45, 50	8615-031		
2	50	VRN2F	25, 30, 35, 40, 45, 50, 55, 60, 65, 70, 75			
2-1/2	65	VRN2G	25, 30, 35, 40, 45, 50, 55, 60, 65, 70, 75, 80, 85, 95			
3	80	VRN2H	25, 30, 35, 40, 45, 50, 55, 60, 65, 70, 75, 80, 85, 95			

MVN Actuator Accessories and Replacement Parts

Material Number	Description	Used With	
MVNAAA/U	Replacement Valve Adaptor	MVN613A0000, MVN643A0000, MVN713A0000	
MVNAAL/U	Replacement Valve Adaptor, Low Profile	MVN613L0000, MVN643L0000, MVN713L0000	
MVNAC6131/U	Replacement Cable with Terminals for Floating Actuators	MVN613A0000, MVN613L0000, MVN643A0000, MVN643L0000	
MVNAC7131/U	Replacement Cable with Terminals for Modulating Actuators	MVN713A0000, MVN713L0000	
MVNAT3/B	Replacement Screw type Terminal Block, Pluggable	MVN613A0000, MVN613L0000, MVN643A0000, MVN643L0000, MVN713A0000, MVN713L0000	

VRW2 Flanged Pressure Independent Control Valves

The VRW2 two-way pressure independent control valves maintain constant flow of hot and chilled water in closed-loop heating, ventilating, and air conditioning (HVAC) systems regardless of head pressure fluctuations above minimum specified pressure drop. These valves come complete with proportional, stay-in-place or electronic fail-safe actuators.

The built-in differential pressure regulator makes fluid flow through the valve independent of changes in supply pressure, eliminating "hunting" by the control system, even at low coil flow. The pressure regulator virtually eliminates cavitation in the valve, and decouples the control valve from the effects of piping components such as reducers and elbows.

Pressure independent control valves are sized to match design coil flow regardless of coil size. VRW2 valves eliminate the need to balance the system for proper flow, and allow chillers to be operated at design temperature differential for maximum efficiency at every load condition. When used in a system with variable speed pump drives, 3-way valves and coil bypass lines are not required.

- Multi-sized bodies from 2 1/2 to 6 inch pipes with wafer flanged connections
- Combination ANSI/ASME Class 150/300 pressure rating
- Controls hot or chilled water with up to 50% glycol
- Regulated flow rates available from 39 to 469 gpm
- Stainless steel pressure regulator maintains constant pressure drop across valve seat
- Positive pressure, rolling diaphragm regulator design provides flow control accuracy of ±5% over specified pressure range
- Equal percentage flow characteristic using multi turn, non-rising, characterized plug
- High close-off rating
- 50 discrete, selectable flow rates available per valve size
- Stainless steel trim
- Six-turn actuator with floating or modulating inputs available with stay-in-place or electronic fail-safe action
- Fail-safe actuators field-configurable for normally open or normally closed power failure return position
- Two Test Ports for venting or pressure gauge attachment

Dimensions in inches (millimeters)

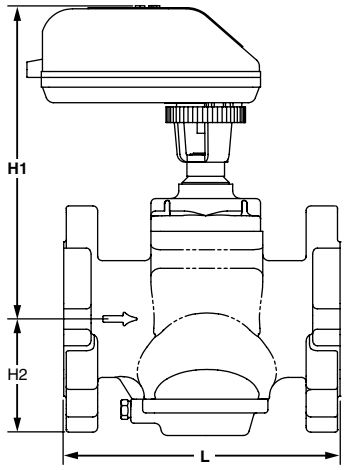

MODEL (SIZE)	L IN. (MM)	H1 IN. (MM)	H2 IN. (MM)
VRW2J… (2-1/2 & 3)	8 3/4 (224)	9 3/4 (246)	3 3/4 (95)
VRW2K… (3 & 4)	12 5/8 (320)	11 3/8 (290)	5 1/4 (135)
VRW2L… (5 & 6)	16 5/8 (422)	13 1/4 (338)	7 1/8 (180)

M34706

Valve Type: Wafer flanged dynamic pressure-regulated control valve
Body Pattern: 2-way, straight-through
Flow Characteristic: Equal Percentage
Connection Type: Wafer flange
Controlled Medium: Chilled or hot water with up to 50% Glycol; not for use with steam or fuels
Valve Action: Multi-turn linear
Leakage Rating: 0.2% max
Maximum Safe Operating Pressure: 580 psig (4000 kPa)
Maximum Safe Operating Temperature: 248°F (120°C)
Maximum Close-off Pressure: 101 psid (700 kPa)
Fluid Temperature Range: -4°F to 248°F (-20°C to 120°C)
Ambient Temperature Range: 14°F to 131°F (-10°C to 55°C)
Accuracy: (±5% over specified pressure range)
Stem Travel: 1 to 6 Rotations in 51 equal, field-selectable increments
ANSI/ ASME Class: 150/300
Comments: 2 - 10V position feedback signal
Materials
(Body): Ductile Iron, ASTM A536-65T, Class 60-45-18
(Stem): Stainless Steel
(Seat): 316 Stainless steel
(Regulator): 316 Stainless steel
(Plug/Ball/Disc): 316 Stainless steel
(Packing): EPDM and Nitrile O-rings
(Diaphragm): EPDM

Valve, Regulated	Pipe Fitting	Body Pattern	Valve Size	Flow Rating	Pressure Rating	Valve Trim	Actuator Secondary Spec	Actuator Control Form	Description
VR	Dynamic pressure regulated control valve								
	W	Combination-size wafer flange							
		2	2-way						
			J	Valve size, 2-1/2 and 3 in. (DN65 and DN80)					
			K	Valve size, 3 and 4 in. (DN80 and DN100)					
			L	Valve size, 5 and 6 in. (DN125 and DN150)					
				V	Adjustable, low minimum differential pressure				
				W	Adjustable, high minimum differential pressure				
					4	ANSI/ASME 150/300			
						S	Stainless steel trim, dual Test Ports		
							M	Multi-turn valve	
								B	Modulating actuator
								D	Modulating fail-safe actuator
VR	W	2	K	V	4	S	M	B	= 2-way, 3 & 4 in. wafer flanged dynamic pressure-regulated valve, SS trim, 55~147 gpm, modulating electronic fail safe.

[a] Wafer-style flanges for each model fit between 2 pipe flange sizes, of either ANSI/ASME Class 150 or Class 300. Valve is suspended from the rods joining the flanges attached to the pipes.

VBF2 Two-way Flanged Control Ball Valve

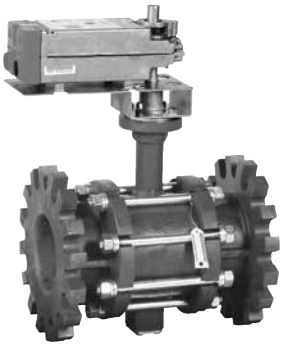

The VBF2 Two-Way Ball Valve Assemblies, with and without actuators, control hot and chilled water with glycol solutions up to 50% in closed loop heating, ventilating, and air conditioning (HVAC) systems to provide two-position or modulating functions. These valve assemblies can be ordered with or without factory-mounted non-spring return or spring return direct-coupled actuators (DCA).

- Sizes from 4 to 6 inch with ANSI Class 125 flanged connections
- Equal percentage or linear flow characteristics
- Choice of four, factory-installed actuation control schemes: 24 Vac Floating/2-position, 24 Vac Modulating (0)2-10 Vdc, 24 Vac 2-position spring return, and 24 Vac (0)2-10 Vdc/Floating spring return
- Field configurable for normally open or normally closed fail-safe position
- Removable manual operating handle to control valve during installation or in an event of power failure
- ANSI Class IV leakage specification (0.01% of C_v)
- Optional NEMA 3R (IP54) rated enclosure for outdoor applications
- Option of four actuator mounting positions on the valve
- Wide range of C_v choices from 91 to 650
- Valve ball and stem 316 stainless steel

Dimensions in inches (millimeters)

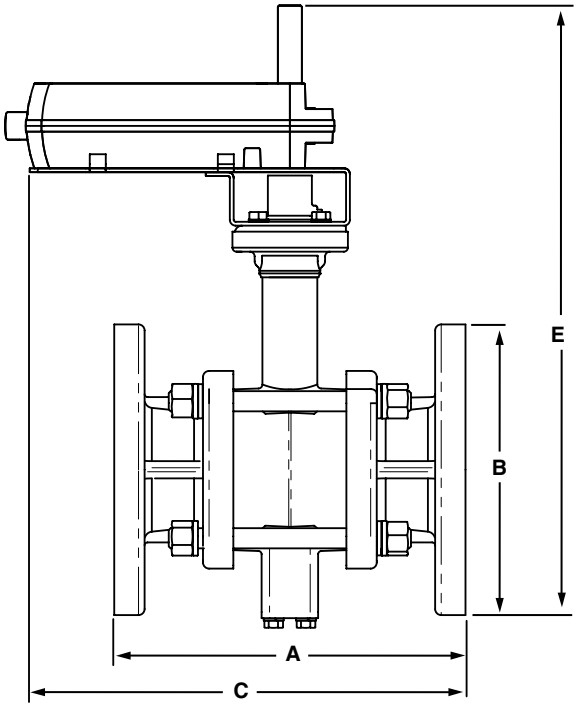

Size (in.)	Model Number	**A** in. (mm)	**B** in. (mm)	**C** in. (mm)	**D** (depth) (not shown) in. (mm)	**E** in. (mm)	Wt. lb (kg)
4	VBF2J	11 (278)	9 (229)	13-1/4 (337)	9 (229)	18-3/4 (476)	65 (31)
5	VBF2K	12-3/8 (352)	10 (254)	14-1/4 (362)	10 (254)	19 (483)	75 (34)
6	VBF2L	13-7/8 (352)	11 (278)	15-1/8 (384)	11 (278)	19-7/8 (505)	90 (41)

M13732

Valve Type: Control Ball Valve
Body Pattern: Two-way
Connection Type: Flanged
Flow Characteristic: Equal percentage
Controlled Medium: Chilled or hot water with up to 50% Glycol; not for use with steam or fuels.
Leakage Rating: ANSI Class IV (0.01% of C_v maximum)
Maximum Safe Operating Pressure: 240 psi (1655 kPa)
Maximum Differential Pressure Ratings (Close-off): 70 psi (483 kPa)
Fluid Temperature Range: -22°F to +250°F (-30°C to +121°C)
Materials
(Body): Cast Iron
(Stem): 316 Stainless Steel
(Seat): Teflon®
(Plug/Ball/Disc): 316 stainless steel

VBF3 Three-way Flanged Control Ball Valve

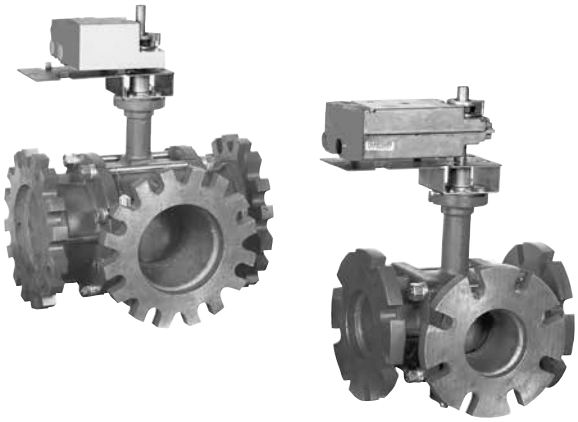

The VBF3 Three-Way Ball Valve Assemblies, with and without actuators, control hot and chilled water with glycol solutions up to 50% in closed loop heating, ventilating, and air conditioning (HVAC) systems to provide two-position or modulating functions. These valve assemblies can be ordered with or without factory-mounted non-spring return or spring return direct-coupled actuators (DCA).

- Sizes from 4 to 6 inch with ANSI Class 125 flanged connections
- Equal percentage or linear flow characteristics
- Choice of four, factory-installed actuation control schemes: Floating, Modulating (2-10 V), Spring Return 24V 2-Position, Spring Return Modulating/Floating
- Field configurable for normally open or normally closed fail-safe position
- Removable manual operating handle to control valve during installation or in an event of power failure
- ANSI Class IV A-port seat leakage (0.01% of C_v)
- Optional NEMA 3R (IP54) rated enclosure for outdoor applications
- Option of four actuator mounting positions on the valve
- Wide range of C_v choices from 91 to 650
- Valve ball and stem 316 stainless steel
- Non-isolating mixing or diverting control

Dimensions in inches (millimeters)

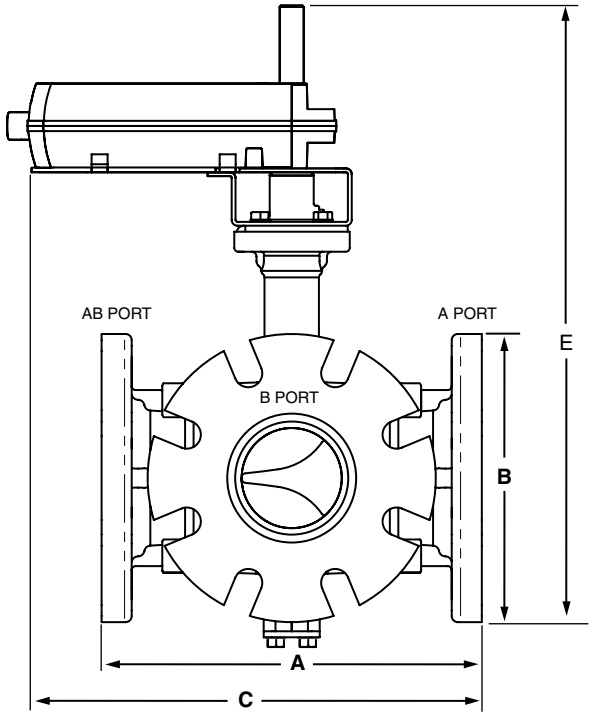

Size (in.)	Model Number	**A** in. (mm)	**B** in. (mm)	**C** in. (mm)	**D** (depth) (not shown) in. (mm)	**E** in. (mm)	Wt. lb (kg)
4	VBF3J	11-7/8 (278)	9 (229)	14-1/8 (337)	10-3/8 (229)	18-1/2 (470)	75 (34)
5	VBF3K	13-7/8 (352)	10 (254)	15-1/8 (362)	12 (254)	19-3/8 (483)	90 (41)
6	VBF3L	15-7/8 (403)	11 (278)	16-1/8 (410)	13-3/8 (521)	20-1/2 (521)	105 (48)

M13733A

Valve Type: Control Ball Valve
Body Pattern: Three-way
Connection Type: Flanged
Flow Characteristic: Linear (B-AB); Equal Percentage (A-AB)
Controlled Medium: Chilled or hot water with up to 50% Glycol; not for use with steam or fuels
Leakage Rating: Mixing or diverting control and ANSI Class IV leakage (.01% of Cv) for all sizes except 4" with 324 Cv, 5" with 400 Cv, 6" with 650 Cv. These are for mixing only and have Class IV leakage A to AB, and Class III leakage (.1% of Cv) B to AB.
Maximum Safe Operating Pressure: 240 psi (1655 kPa)
Maximum Differential Pressure Ratings (Close-off): 70 psi (483 kPa)
Fluid Temperature Range: -22°F to +250°F (-30°C to +121°C)
Materials
(Body): Cast Iron
(Stem): 316 Stainless Steel
(Seat): Teflon®
(Plug/Ball/Disc): 316 stainless steel

Control Ball Valves

Valve	Fitting	Body/Flow	Size	C_v	T/P	Trim	Enclosure	Actuator
VB = valve, ball								
	F = Flanged							
		2 = 2 way						
		3 = 3 way						
				inch	S.I. metric			
			J	4	DN100			
			K	5	DN125			
			L	6	DN150			
				B	C_v Designator (specific values vary by valve size)			
				C				
				D				
				E				
				F				
				….				
				S				
				T				
				U				
				1				
				2				
				3				
				4				
				5				
				6				
				7				
					1 = ANSI Valve construction			
					3 = ANSI 300 Valve construction			
						P = Plated (chrome or nickel)		
						S = Stainless Steel		
							0 = no enclosure	
							R = NEMA 3R enclosure	
								X = no actuator
								A = NSR, Floating, conduit
								B = NSR, Modulating
								C = SR, 2-Position, 24 Vac
								D = SR, Floating/Modulating
								F = NSR, Floating, open terminal strip, 1/2 and 3/4 inch only
VB	F	2	A	B	1	S	0	A

VBN2 Two-way Threaded Control Ball Valve

- Sizes from 1/2 to 3 in. with internal (female) NPT connections.
- Equal percentage flow characteristic.
- Choice of factory-installed actuation: floating, modulating (2-10 V), spring return or non-spring return 2-Position, Spring Return Modulating/Floating.
- Field configurable for normally open or normally closed fail-safe position.
- Removable manual operating handle to control valve during installation or in an event of power failure.
- Actuator can be mounted on the valve in any of four orientations.
- Field-serviceable stem assembly.
- Wide range of C_v choices from 0.33 to 266.
- Nickel-chrome plated brass or 316 stainless steel ball and stem.
- Valve installs in a globe valve “T” pattern, no extra elbows or piping required.
- Mixing or Diverting control for 3-way valves.

The VBN2 2-Way Control Ball Valves control hot and chilled water with glycol solutions up to 50% in heating, ventilating, and air conditioning (HVAC) systems to provide two-position or modulating functions. These control ball valves can be ordered alone or with spring return or non-spring return actuators.

Dimensions in inches (millimeters)

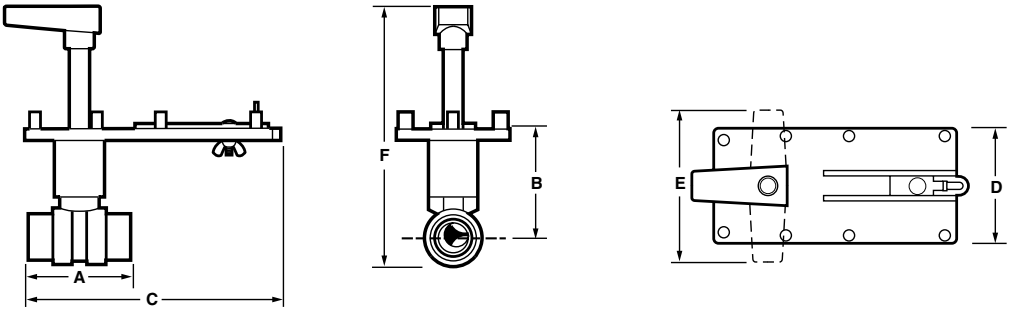

Pipe Size			Cv Designators	DImensions in inches (mm)						Weight	
In.	(DN)	Code		A	B	C	D	E	F	lb	(kg)
1/2	(15)	VBN2A...	B, D, E, F, G, H, K*	2-3/8 (60)	2-3/4 (69)	6-5/8 (169)	3 (76)	4 (102)	8-1/8 (206)	1.0	(0.5)
			J	2-5/8 (67)	2-7/8 (72)	6-1/2 (166)			8-5/16 (211)		
3/4	(20)	VBN2B...	B, D, E, G, H, J, L*		2-3/4 (69)	6-7/16 (163)			8-1/8 (206)		
			K, M*		2-7/8 (72)	6-1/2 (166)			8-5/16 (211)		
1	(25)	VBN2C...	J	2-3/4 (70)		7-1/16 (180)					
			H, L, P*	3-1/16 (77)	3-1/16 (77)	6-3/4 (171)			8-11/16 (220)	1.4	(0.6)
			M, N*	4-5/16 (109)	3-1/4 (82)	7-3/8 (188)			8-7/8 (225)	2.4	(1.1)
1-1/4	(32)	VBN2D...	H, J, K, L, N*	3 (76)	3-1/8 (79)	6-11/16 (170)			8-11/16 (220)	1.4	(0.6)
			M, S*	3-5/8 (92)	3-1/4 (82)	7 (178)			9-1/16 (231)	2.4	(1.1)
1-1/2	(40)	VBN2E...	L, M, R*	3-7/16 (87)		6-15/16 (176)					
			N, 1*	4-1/16 (103)	3-3/4 (95)	7-1/16 (179)			8-7/8 (225)	3.2	(1.5)
2	(50)	VBN2F...	N, T*	4 (101)		7-3/16 (183)					
			P, R, S, 1, 2*	4-15/16 (125)	4-1/16 (103)	7-7/16 (188)			10-1/2 (266)	5.0	(2.3)
2-1/2	(65)	VBN2G...	N, P, R, S, U, 1*	5-5/16 (135)		7-9/16 (192)				5.5	(2.5)
3	(80)	VBN2H...	N, P, R, T, U*	5-3/4 (146)		7-11/16 (196)			10-11/16 (272)	5.9	(2.7)

* Indicates full port valve: no flow characterizing insert.

M34740

Control Ball Valves

Example of complete order-able part number: VBN2A000.38SA+MVN643A0000+C1 Control Ball Valve, Female NPT Thread, 2-way, 1/2", C_v 0.38, Stainless Steel, Standard Profile with MVN643A0000 Actuator, Fail-in-place and 1 meter. Standard profile provides clearance between valve and actuator for insulation. Low profile enables installation of valve and actuator in tight spaces.

Valve Specification		Valve Profile	Standard Profile		Low Profile	
Valve Size (inches)	Close-off Differential Pressure (psi)	Valve Trim	Plated Brass	Stainless Steel	Plated Brass	Stainless Steel
		C_v	Valve Body Model Number			
1/2"	130	0.38	VBN2A000.38PA	VBN2A000.38SA	VBN2A000.38PL	VBN2A000.38SL
		0.68	VBN2A000.68PA	VBN2A000.68SA	VBN2A000.68PL	VBN2A000.68SL
		1.3	VBN2A001.30PA	VBN2A001.30SA	VBN2A001.30PL	VBN2A001.30SL
		2	VBN2A002.00PA	VBN2A002.00SA	VBN2A002.00PL	VBN2A002.00SL
		2.6	VBN2A002.60PA	VBN2A002.60SA	VBN2A002.60PL	VBN2A002.60SL
		4.7	VBN2A004.70PA	VBN2A004.70SA	VBN2A004.70PL	VBN2A004.70SL
		8	VBN2A008.00PA	VBN2A008.00SA	VBN2A008.00PL	VBN2A008.00SL
		11.7	VBN2A011.70PA	VBN2A011.70SA	VBN2A011.70PL	VBN2A011.70SL
3/4"	130	0.31	VBN2B000.31PA	VBN2B000.31SA	VBN2B000.31PL	VBN2B000.31SL
		0.63	VBN2B000.63PA	VBN2B000.63SA	VBN2B000.63PL	VBN2B000.63SL
		1.2	VBN2B001.20PA	VBN2B001.20SA	VBN2B001.20PL	VBN2B001.20SL
		2.5	VBN2B002.50PA	VBN2B002.50SA	VBN2B002.50PL	VBN2B002.50PSL
		4.3	VBN2B004.30PA	VBN2B004.30SA	VBN2B004.30PL	VBN2B004.30SL
		7.4	VBN2B007.40PA	VBN2B007.40SA	VBN2B007.40PL	VBN2B007.40SL
		10.1	VBN2B010.10PA	VBN2B010.10SA	VBN2B010.10PL	VBN2B010.10SL
		14.7	VBN2B014.70PA	VBN2B014.70SA	VBN2B014.70PL	VBN2B014.70SL
		29	VBN2B029.00PA	VBN2B029.00SA	VBN2B029.00PL	VBN2B029.00SL
1"	100	4.4	VBN2C004.40PA	VBN2C004.40SA	VBN2C004.40PL	VBN2C004.40SL
		9	VBN2C009.00PA	VBN2C009.00SA	VBN2C009.00PL	VBN2C009.00SL
		15.3	VBN2C015.30PA	VBN2C015.30SA	VBN2C015.30PL	VBN2C015.30SL
		26	VBN2C026.00PA	VBN2C026.00SA	VBN2C026.00PL	VBN2C026.00SL
		44	VBN2C044.00PA	VBN2C044.00SA	VBN2C044.00PL	VBN2C044.00SL
		54	VBN2C054.00PA	VBN2C054.00SA	VBN2C054.00PL	VBN2C054.00SL
1-1/4"	100	4.4	VBN2D004.40PA	VBN2D004.40SA	VBN2D004.40PL	VBN2D004.40SL
		8.3	VBN2D008.30PA	VBN2D008.30SA	VBN2D008.30PL	VBN2D008.30SL
		14.9	VBN2D014.90PA	VBN2D014.90SA	VBN2D014.90PL	VBN2D014.90SL
		25	VBN2D025.00PA	VBN2D025.00SA	VBN2D025.00PL	VBN2D025.00SL
		37	VBN2D037.00PA	VBN2D037.00SA	VBN2D037.00PL	VBN2D037.00SL
		41	VBN2D041.00PA	VBN2D041.00SA	VBN2D041.00PL	VBN2D041.00SL
		102	VBN2D102.00PA	VBN2D102.00SA	VBN2D102.00PL	VBN2D102.00SL

Actuator Features						
MVN					Standard Profile	Low Profile
Actuator Type	Control Signal	Timing	Voltage	Enclosure	Actuator Model Number	
Fail-in-Place	Floating	90 sec.	24 VAC	NEMA 2 IP 54	+MVN613A0000	+MVN613L0000
	Fast SPDT	30 sec.	24 VAC/DC		+MVN643A0000	+MVN643L0000
	Modulating	90 sec.	24 VAC/DC		+MVN713A0000	+MVN713L0000
Accessories	1 meter cable				+C1	

Example of complete order-able part number: VBN2E030.00SX+MN7505A2001 Control Ball Valve, Female NPT Thread, 2-way, 1-1/2", C_v 30, Black Bracket, Stainless Steel with MN7505A2001 Actuator, Fail-in-place.

Valve Specification		Valve Profile	Black Bracket	
Valve Size (inches)	Close-off Differential Pressure (psi)	Valve Trim	Plated Brass	Stainless Steel
		C_v	Valve Body Model Number	
1/2"	130	0.38	VBN2A000.38PX	VBN2A000.38SX
		0.68	VBN2A000.68PX	VBN2A000.68SX
		1.3	VBN2A001.30PX	VBN2A001.30SX
		2	VBN2A002.00PX	VBN2A002.00SX
		2.6	VBN2A002.60PX	VBN2A002.60SX
		4.7	VBN2A004.70PX	VBN2A004.70SX
		8	VBN2A008.00PX	VBN2A008.00SX
		11.7	VBN2A011.70PX	VBN2A011.70SX
3/4"	130	0.31	VBN2B000.31PX	VBN2B000.31SX
		0.63	VBN2B000.63PX	VBN2B000.63SX
		1.2	VBN2B001.20PX	VBN2B001.20SX
		2.5	VBN2B002.50PX	VBN2B002.50SX
		4.3	VBN2B004.30PX	VBN2B004.30SX
		7.4	VBN2B007.40PX	VBN2B007.40SX
		10.1	VBN2B010.10PX	VBN2B010.10SX
		14.7	VBN2B014.70PX	VBN2B014.70SX
		29	VBN2B029.00PX	VBN2B029.00SX
1"	100	4.4	VBN2C004.40PX	VBN2C004.40SX
		9	VBN2C009.00PX	VBN2C009.00SX
		15.3	VBN2C015.30PX	VBN2C015.30SX
		26	VBN2C026.00PX	VBN2C026.00SX
		44	VBN2C044.00PX	VBN2C044.00SX
		54	VBN2C054.00PX	VBN2C054.00SX
1-1/4"	100	4.4	VBN2D004.40PX	VBN2D004.40SX
		8.3	VBN2D008.30PX	VBN2D008.30SX
		14.9	VBN2D014.90PX	VBN2D014.90SX
		25	VBN2D025.00PX	VBN2D025.00SX
		37	VBN2D037.00PX	VBN2D037.00SX
		41	VBN2D041.00PX	VBN2D041.00SX
		102	VBN2D102.00PX	VBN2D102.00SX
1-1/2"	100	23	VBN2E023.00PX	VBN2E023.00SX
		30	VBN2E030.00PX	VBN2E030.00SX
		41	VBN2E041.00PX	VBN2E041.00SX
		74	VBN2E074.00PX	VBN2E074.00SX
		172	VBN2E172.00PX	VBN2E172.00SX
2"	100	42	VBN2F042.00PX	VBN2F042.00SX
		57	VBN2F057.00PX	VBN2F057.00SX
		71	VBN2F071.00PX	VBN2F071.00SX
		100	VBN2F100.00PX	VBN2F100.00SX
		108	VBN2F108.00PX	VBN2F108.00SX
		210	VBN2F210.00PX	VBN2F210.00SX
		266	VBN2F266.00PX	VBN2F266.00SX
2-1/2"	100	45	VBN2G045.00PX	VBN2G045.00SX
		55	VBN2G055.00PX	VBN2G055.00SX
		72	VBN2G072.00PX	VBN2G072.00SX
		101	VBN2G101.00PX	VBN2G101.00SX
		162	VBN2G162.00PX	VBN2G162.00SX
		202	VBN2G202.00PX	VBN2G202.00SX
3"	100	49	VBN2H049.00PX	VBN2H049.00SX
		63	VBN2H063.00PX	VBN2H063.00SX
		82	VBN2H082.00PX	VBN2H082.00SX
		124	VBN2H124.00PX	VBN2H124.00SX
		145	VBN2H145.00PX	VBN2H145.00SX

Actuator Features					
Direct Coupled Actuators					
Actuator Type	Control Signal	Timing	Voltage	Enclosure	Model Number
Fail-in-Place	Floating	95 sec.	24 VAC/DC	NEMA 2	+MN6105A1011
Fail-in-Place	Modulating, Floating	95 sec.			+MN7505A2001
Fail Safe	Modulating, Floating	95 sec.			+MS7505A2030
Fail Safe	2-Position	95 sec.			+MS8105A1030
Fail Safe Position (MS actuators only - open, closed, A-AB, B-AB)	FSO - Fail Safe Open FSC - Fail Safe Closed				FSO or FSC
Accessories					+3R

VBN3 Three-way Threaded Control Ball Valve

The VBN3 Three-Way Control Ball Valves control hot and chilled water with glycol solutions up to 50% in heating, ventilating, and air conditioning (HVAC) systems to provide two-position or modulating functions.

These valve assemblies can be ordered with or without factory-mounted non-spring return or spring return direct-coupled actuators (DCA).

- Sizes from 1/2 to 2-1/2 inches with internal (female) NPT connections
- Equal percentage or linear flow characteristics
- Reduced B-port C_v for constant loop flow
- Choice of four, factory-installed actuation control schemes: Floating, Modulating (2-10 V), Spring Return 2-Position, Spring Return Modulating/Floating
- Field configurable for normally open or normally closed fail-safe position
- Removable manual operating handle to control valve during installation or in an event of power failure
- ANSI Class IV seat leakage specification (0.01% of C_v)
- Optional NEMA 3R (IP54) rated enclosure for outdoor applications
- Actuator can be mounted on the valve in any of four positions
- Wide C_v choices from 0.33 to 109
- Valve installs in a globe valve "T" pattern, no extra elbows or piping required
- Field-serviceable stem assembly
- Nickel-chrome plated brass ball and stem
- Mixing or Diverting control

Valve Type: Control Ball Valve
Body Pattern: Three-way
Flow Characteristic: Linear (B-AB); Equal Percentage (A-AB)
Connection Type: Female NPT
Controlled Medium: Chilled or hot water with up to 50% Glycol; not for use with steam or fuels
Leakage Rating: ANSI Class IV (0.01% of C_v maximum)
Maximum Safe Operating Pressure: 360 psi (2482 kPa)
Maximum Differential Pressure Ratings (Close-off): 50 psi (345 kPa)
Fluid Temperature Range: -22°F to +250°F (-30°C to +121°C)
Materials
(Body): Brass
(Stem): Brass
(Seat): Teflon® seals with EPDM O-rings
(Plug/Ball/Disc): Nickel-plated brass ball
(Flow Control Insert): Noryl®

Dimensions in inches (millimeters)

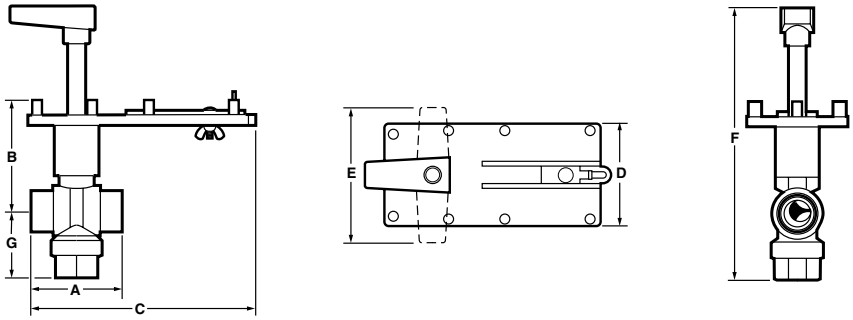

Pipe Size			Cv Designators	DImensions in Inches (mm)							Weight	
In.	(DN)	Code		A	B	C	D	E	F	G	lb	(kg)
1/2	(15)	VBN3A...	B, D, E, F, H, J	3-1/2 (89)	3-5/16 (84)	7 (178)	3 (76)	4 (102)	9-3/8 (239)	2 (51)	2.4	(1.1)
3/4	(20)	VBN3B...	C, D, E, F, G, K*	2-13/16 (71)		6-1/2 (165)			8-13/16 (224)		2.0	(0.9)
1	(25)	VBN3C...	C, D, E, F, G	3-13/16 (97)		7-5/16 (185)			9-1/2 (241)	2-1/16 (52)	2.8	(1.3)
			J, L	3 (76)	3-13/16 (97)	6-13/16 (173)			9-13/16 (249)	2-7/16 (62)	2.6	(1.2)
			H, K, M	4-5/16 (114)	4 (102)	7-13/16 (198)			10-13/16 (274)	3-1/8 (80)	3.3	(1.5)
1-1/4	(32)	VBN3D...	H, J, L*	3 (76)	3-13/16 (97)	6-13/16 (173)			9-13/16 (249)	2-13/16 (72)	2.5	(1.1)
			K, M, N*	3-5/8 (91)	4 (102)	7-5/16 (185)			10-5/16 (262)	2-7/16 (61)	2.8	(1.3)
1-1/2	(40)	VBN3E...	H, J, K, M*	4-5/16 (114)		7-13/16 (198)			10-13/16 (274)	2-3/4 (69)	3.3	(1.5)
			L, P	4 (102)	4-5/16 (114)	7-5/16 (185)			11 (279)	3-3/16 (81)		
2	(50)	VBN3F...	L, N, P							3-1/8 (79)		
			R, T	5 (127)	5-13/16 (147)	7-13/16 (195)			12-5/16 (312)	3-7/8 (98)	3.8	(1.7)
2-1/2	(65)	VBN3G...	P, R, S*							4-1/8 (104)		

* Indicates full A-port: no flow characterizing inserrt.

M34739

Example of complete order-able part number: VBN3A000.33PA+MVN613A0000+C1 Control Ball Valve, Female NPT Thread, 3-way, 1-1/2", C_v 0.33, Plated Brass, with MVN613A0000 Actuator, Fail-in-place and 1 meter. Standard profile provides clearance between valve and actuator for insulation. Low profile enables installation of valve and actuator in tight spaces.

Valve Specification		**Valve Profile**	**Standard Profile**	**Low Profile**
Valve Size (inches)	**Close-off Differential Pressure (psi)**	**Valve Trim**	**Plated Brass**	
		C_v	**Valve Body Model Number**	
1/2"	50	0.33	VBN3A000.33PA	VBN3A000.33PL
		0.59	VBN3A000.59PA	VBN3A000.59PL
		1	VBN3A001.00PA	VBN3A001.00PL
		2.4	VBN3A002.40PA	VBN3A002.40PL
		4.3	VBN3A004.30PA	VBN3A004.30PL
		8	VBN3A008.00PA	VBN3A008.00PL
3/4"	50	0.4	VBN3B000.40PA	VBN3B000.40PL
		0.66	VBN3B000.66PA	VBN3B000.66PL
		1.3	VBN3B001.30PA	VBN3B001.30PL
		2.4	VBN3B002.40PA	VBN3B002.40PL
		3.8	VBN3B003.80PA	VBN3B003.80PL
		7	VBN3B007.00PA	VBN3B007.00PL
		11	VBN3B011.00PA	VBN3B011.00PL
1"	50	0.4	VBN3C000.40PA	VBN3C000.40PL
		0.65	VBN3C000.65PA	VBN3C000.65PL
		1.3	VBN3C001.30PA	VBN3C001.30PL
		2.3	VBN3C002.30PA	VBN3C002.30PL
		3.5	VBN3C003.50PA	VBN3C003.50PL
		4.5	VBN3C004.50PA	VBN3C004.50PL
		8.6	VBN3C008.60PA	VBN3C008.60PL
		14.9	VBN3C014.90PA	VBN3C014.90PL
		22	VBN3C022.00PA	VBN3C022.00PL
		31	VBN3C031.00PA	VBN3C031.00PL
1-1/4"	40	4.1	VBN3D004.10PA	VBN3D004.10PL
		8.7	VBN3D008.70PA	VBN3D008.70PL
		12.7	VBN3D012.70PA	VBN3D012.70PL
		19.4	VBN3D019.40PA	VBN3D019.40PL
		27	VBN3D027.00PA	VBN3D027.00PL
		34	VBN3D034.00PA	VBN3D034.00PL

Actuator Features						
MVN					**Standard Profile**	**Low Profile**
Actuator Type	**Control Signal**	**Timing**	**Voltage**	**Enclosure**	**Actuator Model Number**	
Fail-in-Place	Floating	90 sec.	24 VAC	NEMA 2 IP 54	+MVN613A0000	+MVN613L0000
	Fast SPDT	30 sec.	24 VAC/DC		+MVN643A0000	+MVN643L0000
	Modulating	90 sec.	24 VAC/DC		+MVN713A0000	+MVN713L0000
Accessories	1 meter cable				+C1	

Control Ball Valves

Example of complete order-able part number: VBN3E032.00PX+MN7505A2001 Control Ball Valve, Female NPT Thread, 3-way, 1-1/2", C_v 32, Black Bracket, Plated Brass with MN7505A2001 Actuator, Fail-in-place.

Valve Specification		**Valve Profile**	**Black Bracket**
Valve Size (inches)	**Close-off Differential Pressure (psi)**	**Valve Trim**	**Plated Brass**
		C_v	**Valve Body Model Number**
1/2"	50	0.33	VBN3A000.33PX
		0.59	VBN3A000.59PX
		1	VBN3A001.00PX
		2.4	VBN3A002.40PX
		4.3	VBN3A004.30PX
		8	VBN3A008.00PX
3/4"	50	0.4	VBN3B000.40PX
		0.66	VBN3B000.66PX
		1.3	VBN3B001.30PX
		2.4	VBN3B002.40PX
		3.8	VBN3B003.80PX
		7	VBN3B007.00PX
		11	VBN3B011.00PX
1"	50	0.4	VBN3C000.40PX
		0.65	VBN3C000.65PX
		1.3	VBN3C001.30PX
		2.3	VBN3C002.30PX
		3.5	VBN3C003.50PX
		4.5	VBN3C004.50PX
		8.6	VBN3C008.60PX
		14.9	VBN3C014.90PX
		22	VBN3C022.00PX
		31	VBN3C031.00PX
1-1/4"	40	4.1	VBN3D004.10PX
		8.7	VBN3D008.70PX
		12.7	VBN3D012.70PX
		19.4	VBN3D019.40PX
		27	VBN3D027.00PX
		34	VBN3D034.00PX
1-1/2"	40	4	VBN3E004.00PX
		8.3	VBN3E008.30PX
		13.4	VBN3E013.40PX
		24	VBN3E024.00PX
		32	VBN3E032.00PX
		61	VBN3E061.00PX
2"	100	24	VBN3F024.00PX
		38	VBN3F038.00PX
		57	VBN3F057.00PX
		83	VBN3F083.00PX
		109	VBN3F109.00PX
2-1/2"	100	38	VBN3G038.00PX
		74	VBN3G074.00PX
		100	VBN3G100.00PX

Actuator Features					
Direct Coupled Actuators					
Actuator Type	**Control Signal**	**Timing**	**Voltage**	**Enclosure**	**Model Number**
Fail-in-Place	Floating	95 sec.	24 VAC/DC	NEMA 2	+MN6105A1011
Fail-in-Place	Modulating, Floating	95 sec.			+MN7505A2001
Fail Safe	Modulating, Floating	95 sec.			+MS7505A2030
Fail Safe	2-Position	95 sec.			+MS8105A1030
Fail Safe Position (MS actuators only - open, closed, A-AB, B-AB)	FSO - Fail Safe Open FSC - Fail Safe Closed				FSO or FSC
Accessories					+3R

Replacement parts for VBF2 and VBF3 valves

Material Number	Description	Used With
Ball Valve replacement bottom stem		
7981-701/U	Replacement bottom stem for VBF2 AND VBF3 ball valves	VBF2 and VBF3 Ball Valves
Ball Valve replacement flange O-Ring		
7978-65/U	Replacement flange O-Ring for VBF2 4 in. ball valves	4 in. VBF2 Ball Valves
7978-66/U	Replacement flange O-Ring for VBF2 5 in. and VBF3 4 in. ball valves	5 in. VBF2 and 4 in. VBF3 Ball Valves
7978-67/U	Replacement flange O-Ring for VBF3 5 in. ball valves	5 in. VBF3 Ball Valves
7978-68/U	Replacement flange O-Ring for VBF2 6 in. ball valves	6 in. VBF2 Ball Valves
7978-69/U	Replacement flange O-Ring for VBF3 6 in. ball valves	6 in. VBF3 Ball Valves
Ball Valve replacement seal		
7981-910/U	Replacement seal for VBF2 4 in. ball valves	4 in. VBF2 Ball Valves
7981-911/U	Replacement seal for VBF2 5 in. and VBF3 4 in. ball valves	5 in. VBF2 and 4 in. VBF3 Ball Valves
7981-912/U	Replacement seal for VBF2 6 in. and VBF3 5 in. ball valves	6 in. VBF2 and 5 in. VBF3 Ball Valves
7981-913/U	Replacement seal for VBF3 6 in. ball valves	6 in. VBF3 Ball Valves
Ball Valve replacement seal O-Ring		
7981-914/U	O-Ring Replacement seal for VBF2 4 in. ball valves	4 in. VBF2 Ball Valves
7981-915/U	Replacement seal O-Ring for VBF2 5 in. and VBF3 4 in. ball valves	5 in. VBF2 and 4 in. VBF3 Ball Valves
7981-916/U	Replacement seal O-Ring for VBF2 6 in. and VBF3 5 in. ball valves	6 in. VBF2 and 5 in. VBF3 Ball Valves
7981-917/U	Replacement seal O-Ring for VBF3 6 in. ball valves	6 in. VBF3 Ball Valves

Replacement parts for VBN valves

Material Number	Description	Used With
NEMA 3R Enclosure kit		
5112-3R	NEMA 3R Enclosure kit for VBN valves	VBN valves
Replacement stem assembly for VBN valves		
5112-11/U	Direct coupled actuator mounting Kit for VBN2, VBN3	VBN2A-H, VBN3A-G

MVN Actuator Accessories and Replacement Parts

Material Number	Description	Used With	
MVNAAA/U	Replacement Valve Adaptor	MVN613A0000, MVN643A0000, MVN713A0000	
MVNAAL/U	Replacement Valve Adaptor, Low Profile	MVN613L0000, MVN643L0000, MVN713L0000	
MVNAC6131/U	Replacement Cable with Terminals for Floating Actuators	MVN613A0000, MVN613L0000, MVN643A0000, MVN643L0000	
MVNAC7131/U	Replacement Cable with Terminals for Modulating Actuators	MVN713A0000, MVN713L0000	
MVNAT3/B	Replacement Screw type Terminal Block, Pluggable	MVN613A0000, MVN613L0000, MVN643A0000, MVN643L0000, MVN713A0000, MVN713L0000	

Replacement Stem Assemblies for VBN Valves

Pipe Size		VBN 2-way		VBN 3-way		Replacement Stem Assembly *
In.	DN	Valve Code	Cv Offerings (VBN2)	Valve Code	Cv Offerings (VBN3)	
1/2	15	VBN2A	0.38, 0.68, 1.30, 2.00, 2.60, 4.70, 11.70	VBN3A		5112-19, 5112-22 (SS)
			8.00		0.33, 0.59, 1.00, 2.40, 4.30, 8.00	
3/4	20	VBN2B	0.31, 0.63, 1.20, 2.50, 4.30, 7.40, 14.70	VBN3B		
			10.10, 29.00		0.40, 0.66, 1.30, 2.40, 3.80, 7.00, 11.00	
1	25	VBN2C	9.00	VBN3C	0.40, 0.65, 1.30, 2.30, 3.50	
			4.40, 15.30, 54.00		8.60, 22.00	5112-20, 5112-23 (SS)
			26.00, 44.00		4.50, 14.90, 31.00	
1-1/4	32	VBN2D	4.40, 8.30, 14.90, 25.00, 41.00	VBN3D	4.10, 8.70, 19.40	
			37.00, 102.00		12.70, 27.00, 34.00	
1-1/2	40	VBN2E	23.00, 30.00, 74.00	VBN3E	4.00, 8.30, 13.40, 32.00	
			41.00, 172.00		24.00, 61.00	5112-21, 5112-24 (SS)
2	50	VBN2F	42.00, 108.00	VBN3F	24.00, 38.00, 57.00	
			57.00, 71.00, 100.00, 210.00, 266.00		83.00, 109.00	
2-1/2	65	VBN2G	45.00, 55.00, 72.00, 101.00, 162.00, 202.00	VBN3G	38.00, 74.00, 100.00	
3	80	VBN2H	49.00, 63.00, 82.00, 124.00, 145.00			

* Replacement stems available in brass or stainless steel – use accordingly to valve part number.

VFF1 Two-way Normally-Open Butterfly Control Valves

Resilient seat in two-way valves, provide control for HVAC system applications including chilled water, hot water, cooling tower water, and thermal storage systems.

Body Pattern: 2 way (S/R NO)
Valve Action: Normally Open
Connection Type: Lugged
Controlled Medium: Chilled or hot water with up to 50% Glycol; not for use with steam or fuels.
Actuator Control Type: Pneumatic
Flow Characteristic: Modified Equal Percent
Mounting: ANSI Flanged
Static Pressure Rating (max): 250 psi (1724 kPa)
Actuator Ambient Temperature Ratings: -20°F to 150°F (-29°C to 66°C)
Temperature Range: -40°F to 250°F (-40°C to 121°C)
Number of Flange Bolts
For 2 in., 2-1/2 in., 3 in. valves: 4
For 4 in., 5 in., 6 in., 8 in. valves: 8
For 10 in., 12 in., 14 in. valves: 12
For 16 in., 18 in. valves: 16
For 20 in. valves: 20
Flange Bolt Thread
For 2 in., 2-1/2 in., 3 in., 4 in. valves: 5/8 in. -11 pitch
For 5 in., 6 in., 8 in. valves: 3/4 in. -10 pitch
For 10 in., 12 in. valves: 7/8 in. -9 pitch
For 14 in., 16 in., 18 in., 20 in. valves: 1-1/8 in. -7 pitch
Materials
(Body): Polyester-coated cast iron ASTM A126 Class B
(Stem): 416 Stainless Steel
(Seat): Peroxide-cured EPDM resilient seat
(Plug/Ball/Disc): Nylon 11-coated ductile iron (optional: aluminum, bronze, and stainless steel)

VFF2 Two-way Butterfly Control Valves

Resilient seat two-way valves provide control for HVAC system applications including chilled water, hot water, cooling tower water, and thermal storage systems.

Body Pattern: 2 way (NC, NC/NO; NSR)
Valve Action: Normally Closed, convertible to Normally Open with Spring Return DCA
Connection Type: Lugged
Controlled Medium: Chilled or hot water with up to 50% Glycol; not for use with steam or fuels.
Flow Characteristic: Modified Equal Percent
Mounting: ANSI Flanged
Static Pressure Rating (max): 250 psi (1724 kPa)
Actuator Ambient Temperature Ratings: -5°F to 140°F (-20°C to 60°C)
Temperature Range: -40°F to 250°F (-40°C to 121°C)
Number of Flange Bolts
For 2 in., 2-1/2 in., 3 in. valves: 4
For 4 in., 5 in., 6 in., 8 in. valves: 8
For 10 in., 12 in., 14 in. valves: 12
For 16 in., 18 in. valves: 16
For 20 in. valves: 20
Flange Bolt Thread
For 2 in., 2-1/2 in., 3 in., 4 in. valves: 5/8 in. -11 pitch
For 5 in., 6 in., 8 in. valves: 3/4 in. -10 pitch
For 10 in., 12 in. valves: 7/8 in. -9 pitch
For 14 in., 16 in., 18 in., 20 in. valves: 1-1/8 in. -7 pitch
Materials
(Body): Polyester-coated cast iron ASTM A126 Class B
(Stem): 416 Stainless Steel
(Seat): Peroxide-cured EPDM resilient seat
(Plug/Ball/Disc): Nylon 11-coated ductile iron (optional: aluminum, bronze, and stainless steel)
Approvals
CE: Compliant
Underwriters Laboratories, Inc: C/US UL873, Plenum Rated

NOTE: Valves with Manual Operators use over-cut disks to achieve 250 psid close-off, and cannot be automated due to their high torque.

VFF3 Three-way (A-B-AB) Butterfly Control Valves

Resilient seat three-way valves provide control for HVAC system applications including chilled water, hot water, cooling tower water, and thermal storage systems.

Body Pattern: 3 way (A-B-AB porting)
Valve Action: Normally Closed
Connection Type: Lugged
Controlled Medium: Chilled or hot water with up to 50% Glycol; not for use with steam or fuels.
Flow Characteristic: Modified Equal Percent
Mounting: ANSI Flanged
Static Pressure Rating (max): 250 psi (1724 kPa)
Actuator Ambient Temperature Ratings: -5°F to 140°F (-20°C to 60°C)
Temperature Range: -40°F to 250°F (-40°C to 121°C)
Number of Flange Bolts
For 2 in., 2-1/2 in., 3 in. valves: 4
For 4 in., 5 in., 6 in., 8 in. valves: 8
For 10 in., 12 in., 14 in. valves: 12
For 16 in., 18 in. valves: 16
For 20 in. valves: 20
Flange Bolt Thread
For 2 in., 2-1/2 in., 3 in., 4 in. valves: 5/8 in. -11 pitch
For 5 in., 6 in., 8 in. valves: 3/4 in. -10 pitch
For 10 in., 12 in. valves: 7/8 in. -9 pitch
For 14 in., 16 in., 18 in., 20 in. valves: 1-1/8 in. -7 pitch
Materials
(Body): Polyester-coated cast iron ASTM A126 Class B
(Stem): 416 Stainless Steel
(Seat): Peroxide-cured EPDM resilient seat
(Plug/Ball/Disc): Nylon 11-coated ductile iron (optional: aluminum, bronze, and stainless steel)
Approvals
CE: Compliant
Underwriters Laboratories, Inc: C/US UL873, Plenum Rated

VFF6 Three-way (A-AB-B) Butterfly Control Valves

Resilient seat three-way valves provide control for HVAC system applications including chilled water, hot water, cooling tower water, and thermal storage systems.

Body Pattern: 3 way (A-AB-B porting)
Valve Action: Normally Closed
Connection Type: Lugged
Controlled Medium: Chilled or hot water with up to 50% Glycol; not for use with steam or fuels.
Flow Characteristic: Modified Equal Percent
Mounting: ANSI Flanged
Static Pressure Rating (max): 250 psi (1724 kPa)
Actuator Ambient Temperature Ratings: -5°F to 140°F (-20°C to 60°C)
Temperature Range: -40°F to 250°F (-40°C to 121°C)
Number of Flange Bolts
For 2 in., 2-1/2 in., 3 in. valves: 4
For 4 in., 5 in., 6 in., 8 in. valves: 8
For 10 in., 12 in., 14 in. valves: 12
For 16 in., 18 in. valves: 16
For 20 in. valves: 20
Flange Bolt Thread
For 2 in., 2-1/2 in., 3 in., 4 in. valves: 5/8 in. -11 pitch
For 5 in., 6 in., 8 in. valves: 3/4 in. -10 pitch
For 10 in., 12 in. valves: 7/8 in. -9 pitch
For 14 in., 16 in., 18 in., 20 in. valves: 1-1/8 in. -7 pitch
Materials
(Body): Polyester-coated cast iron ASTM A126 Class B
(Stem): 416 Stainless Steel
(Seat): Peroxide-cured EPDM resilient seat
(Plug/Ball/Disc): Nylon 11-coated ductile iron (optional: aluminum, bronze, and stainless steel)
Approvals
CE: Compliant
Underwriters Laboratories, Inc: C/US UL873, Plenum Rated

Butterfly Valve Assembly Accessories

Product Number	Description	Used With
VFF50-0400/M	Position status monitor for VFF butterfly valves with high pressure pneumatic actuators	VFF...XR/XS; VFF...ER/ES; VFF...CR/CS; High pressure pneumatic actuator without pneumatic or electro-pneumatic positioner

Butterfly Valves	Fitting	Body Pattern	Size	Disk size (close-off)	Pressure Rating	Valve trim	Actuator secondary Specification	Actuator primary Specification	Description	Actuator Type
VF	Butterfly Valve, resilient seat									
	F	Flanged fitting								
		1	2-way (spring return normally open)							
		2	2-way (non-spring return: Spring return normally closed or field-convertible)							
		3	3-way A-B-AB (mixing/diverting)							
		6	3-way A-AB-B (diverting/mixing)							
			F	2 inch (DN50)						
			G	2-1/2 inch (DN65)						
			H	3 inch (DN80)						
			J	4 inch (DN100)						
			K	5 inch (DN125)						
			L	6 inch (DN150)						
			M	8 inch (DN200)						
			N	10 inch (DN250)						
			P	12 inch (DN300)						
			R	14 inch (DN350)						
			S	16 inch (DN400)						
			T	18 inch (DN450)						
			U	20 inch (DN500)						
				V	Undercut disk (lower actuator torque; 50 psid close-off)					
				W	Full diameter disk (high close-off)					
					1	ANSI 150 psig body pressure rating				
					2	ANSI 250 psig body pressure rating				
						Y	Nylon-coated disk, EPDM seat			
							2	NEMA 2 actuator housing (Honeywell DCA)		Electric
							6	NEMA 6 actuator housing with manual operator and heater		Electric
							X	NEMA 4X actuator housing with manual operator and heater		Electric
							8	Spring Range 8-13 psi for 20 psi pneumatic actuator		Pneumatic
							C	24 Vac solenoid for 80 psi pneumatic actuator		Pneumatic
							D	Electro-pneumatic positioner for 80 psi actuator		Pneumatic
							E	120 Vac solenoid for 80 psi pneumatic actuator		Pneumatic
							P	Pneumatic positioner for modulating applications		Pneumatic
							X	Standard, two-position control only		Pneumatic
							L	Lever operator for dead end service		Manual
							G	Geared operator for dead end service		Manual
								A	Floating actuator	Electric
								B	Modulating actuator	Electric
								C	Two-position 24 Vac spring return actuator	Electric
								D	Modulating spring return actuator	Electric
								E	Two-position 120 Vac spring return actuator	Electric
								P	Pneumatic actuator, spring return 20 psi	Pneumatic
								R	Pneumatic actuator, push-pull 80 psi	Pneumatic
								S	Pneumatic actuator, spring return 80 psi	Pneumatic
								X	Valve body only, for dead end service	Man
VF	F	2	J	V	1	Y	2	D	2-way, 4 inch flanged resilient-seat butterfly valve, undercut disk (50 psid close-off) modulating/floating control, spring return normally closed.	

** VFF50-0400 position status monitor for VFF butterfly valves with high pressure pneumatic actuators is available to be ordered separately or will be assembled to the valve if ordered at the same time. It is compatible with any high pressure pneumatic actuators without pneumatic or electro-pneumatic positioner (e.g. VFF...XR/XS, VFF...CR/CS, or VFF...ER/ES).

V5011A, B Two-Way Flanged Globe Valves

Used for proportional control of hot or chilled water and glycol solutions (to 50 percent concentration) and for two-position control of low pressure steam in closed loop HVAC systems.

- Sizes range from 2-1/2 to 6 inches.
- Stainless steel stem with serviceable Teflon packing.
- Valves utilize direct mounting valve actuators; Q5020 and Q5024 linkages with Direct Coupled Actuators; or Pneumatic Valve Actuators to operate the valve.
- Equal Percentage flow characteristic.

Dimensions in inches (millimeters)

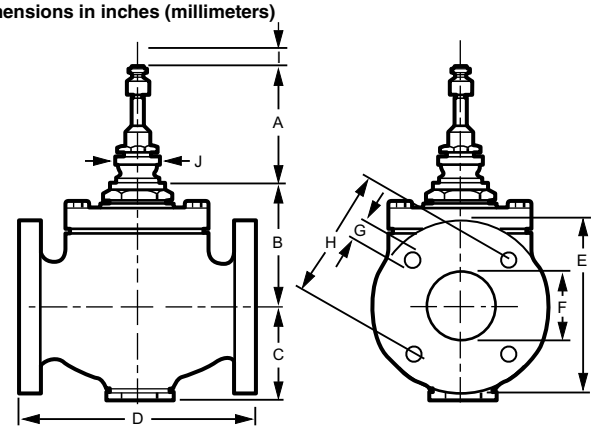

MODEL	VALVE SIZE	A[a]	B	C	D	E	F	G	H	I (TRAVEL)	J (DIAMETER)
V5011A	2-1/2 (64)	3-1/2 (89)	4-13/16 (122)	4 (102)	9-1/2 (241)	7 (178)	2-1/2 (64)	3/4 (19)	5-1/2 (140)	3/4 (19)	1-3/8 (35)
	3 (76)	3-1/2 (89)	3-1/2 (89)	4-5/8 (117)	11 (279)	7-1/2 (191)	3 (76)	3/4 (19)	6 (152)	3/4 (19)	1-3/8 (35)
	4 (102)	5-1/4 (133)	5-1/4 (133)	5-3/16 (132)	13 (330)	9 (229)	4 (102)	3/4 (19)	7-1/2 (191)	1-1/2 (38)	1-7/8 (48)
V5011B	4 (102)	6-3/4 (171)	6-3/4 (171)	8-1/16 (205)	13 (330)	9 (229)	4 (102)	3/4 (19)	7-1/2 (191)	1-1/2 (38)	1-7/8 (48)

M27256

Valve Type: Globe Valve
Body Pattern: Two-way
Connection Type: Flanged
Controlled Fluid: Chilled or hot water with up to 50% Glycol or Low pressure steam. Not for use with fuels.
Flow Characteristic: Equal Percentage
Actuation: Must be purchased separately
Ambient Temperature Range: 40°F to 250°F (4°C to 121°C)
Maximum Differential Pressure Ratings (Close-off) (psi): For Quiet Water Service – 20 psid
Maximum Differential Pressure Ratings (Close-off) (kPa): For Quiet Water Service – 138 kPa
Maximum Safe Operating Pressure (psi): 150 psi at 240°F water; 15 psi steam
Maximum Safe Operating Pressure (kPa): 1034 kPa at 115°C water; 100 kPa steam
Static Pressure Rating (psi): Meets ANSI 125 Standard
Static Pressure Rating (kPa): Meets ANSI 125 Standard
ANSI/ASME Rating: 125
Materials (Body): Cast Iron
Materials (Seat): Bronze
Materials (Stem): 316 Stainless Steel
Materials (Packing): Teflon Cone

Material Number	Pipe Size (inch)	Pipe Size (DN)	Capacity (Cv)	Capacity (Kv)	Stem Travel	Bonnet Size	Valve Action	Used With
V5011A1734/U	2 1/2 in.	DN65	63 Cv	54 kvs	3/4 in. (20 mm)	1-3/8 in. (35 mm)	Stem down to close	Q5001/Modutrol IV Motor; MP953; ML6420, 21A, 25; ML7420/ML7421A/ML7425; ML6984/ML7984; Q5020; Q5024
V5011A1767/U	3 in.	DN80	100 Cv	85 kvs	3/4 in. (20 mm)	1-3/8 in. (35 mm)	Stem down to close	ML6984/ML7984; ML7420/ML7421A/ML7425; ML6420, 21A, 25; Q5001/Modutrol IV Motor; MP953; Q5020; Q5024
V5011A1858/U	4 in.	DN100	160 Cv	137 kvs	1 1/2 in. (38 mm)	1-7/8 in. (47.6 mm)	Stem down to close	Q5001/Modutrol IV Motor; MP953; ML7421B; ML6421B; Q5024
V5011A1882/U	5 in.	DN125	250 Cv	214 kvs	1 1/2 in. (38 mm)	1-7/8 in. (47.6 mm)	Stem down to close	ML6421B; ML7421B; Q5001/Modutrol IV Motor; MP953; Q5024
V5011A1916/U	6 in.	DN150	360 Cv	308 kvs	1 1/2 in. (38 mm)	1-7/8 in. (47.6 mm)	Stem down to close	ML6421B; Q5001/Modutrol IV Motor; MP953; ML7421B; Q5024
V5011B1013/U	4 in.	DN100	160 Cv	137 kvs	1 1/2 in. (38 mm)	1-7/8 in. (47.6 mm)	Stem up to close	ML7421B; Q5001/Modutrol IV Motor; MP953; ML6421B; Q5024
V5011B1047/U	5 in.	DN125	250 Cv	214 kvs	1 1/2 in. (38 mm)	1-7/8 in. (47.6 mm)	Stem up to close	ML6421B; ML7421B; Q5001/Modutrol IV Motor; MP953; Q5024
V5011B1070/U	6 in.	DN150	360 Cv	308 kvs	1 1/2 in. (38 mm)	1-7/8 in. (47.6 mm)	Stem up to close	ML6421B; Q5001/Modutrol IV Motor; MP953; ML7421B; Q5024

VGF2 Two-way Flanged Globe Valves

Dimensions in inches (millimeters)

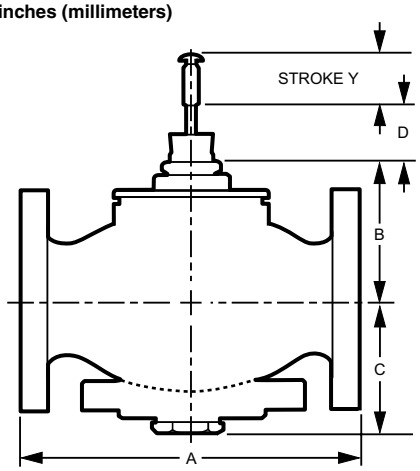

1 DOTTED LINE REPRESENTS ANSI 125 VALVE BONNET.

MODEL NUMBER	DIMENSIONS, IN. (MM)				
	A	B	C	E	Y
2-WAY VALVES, ANSI CLASS 125. STEM DOWN TO CLOSE. EQUAL PERCENTAGE OR LINEAR FLOW CHARACTERISTIC					
VGF21_S25	10-7/8 (276)	4-3/8 (112)	7 (178)	3-1/2 (89)	13/16 (20)
VGF21_S30	11-3/4 (298)	6-3/8 (161)	7-1/2 (191)		
VGF21_S40	13-7/8 (352)	5-7/8 (150)	9 (229)	5-1/4 (133)	1-1/2 (38)
VGF21_S50	15-3/4 (400)	6-3/16 (157)	10 (254)		
VGF21_S60	17-3/4 (451)	6-3/16 (157)	11 (279)		
2-WAY VALVES, ANSI CLASS 250. STEM DOWN TO CLOSE. EQUAL PERCENTAGE FLOW CHARACTERISTIC					
VGF22ES25	11-1/2 (292)	4-3/8 (112)	7-1/2 (191)	3-1/2 (89)	13/16 (20)
VGF22ES30	12-1/2 (318)	6-3/8 (161)	8-1/4 (210)		
VGF22ES40	14-1/2 (368)	5-7/8 (150)	10 (254)	5-1/4 (133)	1-1/2 (38)
VGF22ES50	16-5/8 (422)	6-3/16 (157)	11 (279)		
VGF22ES60	18-5/8 (473)	6-3/16 (157)	12-1/2 (318)		
2-WAY VALVES, PRESSURE-BALANCED, ANSI CLASS 125. STEM DOWN TO CLOSE. EQUAL PERCENTAGE OR LINEAR FLOW CHARACTERISTIC					
VGF21_P25	10-7/8 (276)	4-3/16 (107)	7 (178)	3-1/2 (89)	13/16 (20)
VGF21_P30	11-3/4 (298)	5-7/8 (150)	7-1/2 (191)		
VGF21_P40	13-7/8 (352)	5-7/8 (150)	9 (229)	5-1/4 (133)	1-1/2 (38)
VGF21_P50	15-3/4 (400)	6-1/8 (156)	10 (254)		
VGF21_P60	17-3/4 (451)	6-1/8 (156)	11 (279)		

M27603

Flanged globe valves for two-position or modulating control in heating, ventilating and air conditioning (HVAC) systems. Can be operated by ML6984/7984, ML6420/6425, ML6421/7421 Actuators, MP953 Pneumatic Actuators, Modutrol Motors with Q5001 valve linkage, or MN/MS direct coupled actuators (DCA).

- ANSI Class 125 and Class 250 cast iron bodies with flanged end connections
- Equal percentage and linear flow characteristics
- Face-to-face flange dimensions per ANSI/ISA S75.03 standard
- Sizes from 2-1/2 to 6 in.
- Stainless steel trim standard for long life span
- ANSI Class III or IV seat leakage
- Steam inlet pressure up to 100 psig and 353°F maximum temperature
- Self-adjusting packing
- Accurate positioning with equal percentage and linear flow characteristics to ensure precise temperature control
- Universal bonnet for direct-coupled electric and pneumatic actuators for easy mounting, or linkage coupled Modutrol™ Motors and MN/MS Series direct coupled actuators.
- Not suitable for combustible gasses.

Valve Type: Globe Valve
Body Pattern: Two-way
Valve Action: Stem down to close
Connection Type: Flanged
Controlled Fluid: Chilled or hot water with up to 50% Glycol or Steam. Not for use with fuels.
Actuation: Must be purchased separately
Static Pressure Rating: VGF21-Meets ANSI 125 Standard; VGF22-Meets ANSI 250 Standard
ANSI/ASME Rating: VGF21-125; VGF22-250
Fluid Temperature Range: 20°F to 250°F, steam 353°F (-7°C to +120°C, steam 180°C)
Materials (Body): Cast Iron ASTM A126 Class B
Materials (Seat): Stainless Steel
Materials (Stem): Stainless Steel
Materials (Plug / Ball / Disc): Stainless Steel
Materials (Packing): Spring-loaded PTFE cone rings
Materials (Cartridge): Stainless Steel
Leakage: 0.05% of Cv
Comments: Direct acting

Flanged Globe Valves

Material Number	Pipe Size (inch)	Pipe Size (DN)	Capacity (Cv)	Capacity (Kv)	Maximum Safe Operating Pressure (psi)	Maximum Safe Operating Pressure (kPa)	Maximum Differential Pressure Ratings (Close-off) (psi)	Maximum Differential Pressure Ratings (Close-off) (kPa)	Flow Characteristic	Stem Travel	Bonnet Size	Used With
VGF21ES25	2 1/2 in.	DN65	70 Cv	60 Kv	175 psig	1206 kPa	69 psi	475 kPa	Equal Percentage	3/4 in. (20 mm)	1-3/8 in. (35 mm)	ML6420/21A/25; ML7420/21A/25; Q5020/DCA; Q5001/ Modutrol IV Motor; MP953; Q5024
VGF21ES30	3 in.	DN80	115 Cv	99 Kv	175 psig	1206 kPa	34 psi	234 kPa	Equal Percentage	3/4 in. (20 mm)	1-3/8 in. (35 mm)	ML6420/21A/25; ML7420/21A/25; Q5020/DCA; Q5001/ Modutrol IV Motor; MP953; Q5024
VGF21ES40	4 in.	DN100	150 Cv	129 Kv	175 psig	1206 kPa	34 psi	234 kPa	Equal Percentage	1 1/2 in. (38 mm)	1-7/8 in. (47.6 mm)	ML6421B; ML7421B; Q5001/Modutrol IV Motor; MP953; Q5024
VGF21ES50	5 in.	DN125	285 Cv	245 Kv	175 psig	1206 kPa	13 psi	90 kPa	Equal Percentage	1 1/2 in. (38 mm)	1-7/8 in. (47.6 mm)	ML6421B; ML7421B; Q5001/Modutrol IV Motor; MP953; Q5024
VGF21ES60	6 in.	DN150	365 Cv	314 Kv	175 psig	1206 kPa	13 psi	90 kPa	Equal Percentage	1 1/2 in. (38 mm)	1-7/8 in. (47.6 mm)	ML6421B; ML7421B; Q5001/Modutrol IV Motor; MP953; Q5024
VGF21LS25	2 1/2 in.	DN65	70 Cv	60 Kv	175 psig	1206 kPa	69 psi	475 kPa	Linear	3/4 in. (20 mm)	1-3/8 in. (35 mm)	ML6420/21A/25; ML7420/21A/25; Q5020/DCA; Q5001/ Modutrol IV Motor; MP953; Q5024
VGF21LS30	3 in.	DN80	125 Cv	108 Kv	175 psig	1206 kPa	34 psi	234 kPa	Linear	3/4 in. (20 mm)	1-3/8 in. (35 mm)	ML6420/21A/25; ML7420/21A/25; Q5020/DCA; Q5001/ Modutrol IV Motor; MP953; Q5024
VGF21LS40	4 in.	DN100	155 Cv	133 Kv	175 psig	1206 kPa	34 psi	234 kPa	Linear	1 1/2 in. (38 mm)	1-7/8 in. (47.6 mm)	ML6421B; ML7421B; Q5001/Modutrol IV Motor; MP953; Q5024
VGF21LS50	5 in.	DN125	320 Cv	275 Kv	175 psig	1206 kPa	13 psi	90 kPa	Linear	1 1/2 in. (38 mm)	1-7/8 in. (47.6 mm)	ML6421B; ML7421B; Q5001/Modutrol IV Motor; MP953; Q5024
VGF21LS60	6 in.	DN150	370 Cv	318 Kv	175 psig	1206 kPa	13 psi	90 kPa	Linear	1 1/2 in. (38 mm)	1-7/8 in. (47.6 mm)	ML6421B; ML7421B; Q5001/Modutrol IV Motor; MP953; Q5024
VGF22ES25	2 1/2 in.	DN65	70 Cv	60 Kv	400 psig	2758 kPa	69 psi	475 kPa	Equal Percentage	3/4 in. (20 mm)	1-3/8 in. (35 mm)	ML6420/21A/25; ML7420/21A/25; Q5020/DCA; Q5001/ Modutrol IV Motor; MP953; Q5024
VGF22ES30	3 in.	DN80	120 Cv	103 Kv	400 psig	2758 kPa	34 psi	234 kPa	Equal Percentage	3/4 in. (20 mm)	1-3/8 in. (35 mm)	ML6420/21A/25; ML7420/21A/25; Q5020/DCA; Q5001/ Modutrol IV Motor; MP953; Q5024
VGF22ES40	4 in.	DN100	150 Cv	129 Kv	400 psig	2758 kPa	34 psi	234 kPa	Equal Percentage	1 1/2 in. (38 mm)	1-7/8 in. (47.6 mm)	ML6421B; ML7421B; Q5001/Modutrol IV Motor; MP953; Q5024
VGF22ES50	5 in.	DN125	320 Cv	275 Kv	400 psig	2758 kPa	13 psi	90 kPa	Equal Percentage	1 1/2 in. (38 mm)	1-7/8 in. (47.6 mm)	ML6421B; ML7421B; Q5001/Modutrol IV Motor; MP953; Q5024
VGF22ES60	6 in.	DN150	370 Cv	318 Kv	400 psig	2758 kPa	13 psi	90 kPa	Equal Percentage	1 1/2 in. (38 mm)	1-7/8 in. (47.6 mm)	ML6421B; ML7421B; Q5001/Modutrol IV Motor; MP953; Q5024

VGF2 Two-way Pressure Balanced Flanged Globe Valves

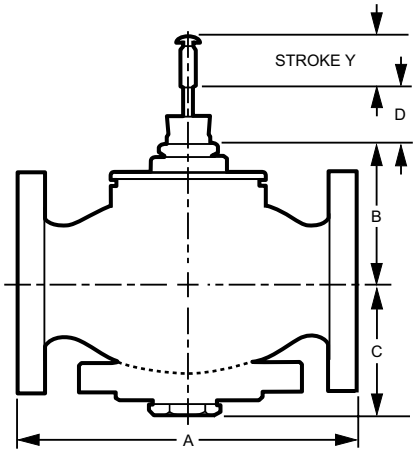

1 DOTTED LINE REPRESENTS ANSI 125 VALVE BONNET.

MODEL NUMBER	DIMENSIONS, IN. (MM)				
	A	B	C	E	Y
2-WAY VALVES, ANSI CLASS 125. STEM DOWN TO CLOSE. EQUAL PERCENTAGE OR LINEAR FLOW CHARACTERISTIC					
VGF21_S25	10-7/8 (276)	4-3/8 (112)	7 (178)	3-1/2 (89)	13/16 (20)
VGF21_S30	11-3/4 (298)	6-3/8 (161)	7-1/2 (191)		
VGF21_S40	13-7/8 (352)	5-7/8 (150)	9 (229)	5-1/4 (133)	1-1/2 (38)
VGF21_S50	15-3/4 (400)	6-3/16 (157)	10 (254)		
VGF21_S60	17-3/4 (451)	6-3/16 (157)	11 (279)		
2-WAY VALVES, ANSI CLASS 250. STEM DOWN TO CLOSE. EQUAL PERCENTAGE FLOW CHARACTERISTIC					
VGF22ES25	11-1/2 (292)	4-3/8 (112)	7-1/2 (191)	3-1/2 (89)	13/16 (20)
VGF22ES30	12-1/2 (318)	6-3/8 (161)	8-1/4 (210)		
VGF22ES40	14-1/2 (368)	5-7/8 (150)	10 (254)	5-1/4 (133)	1-1/2 (38)
VGF22ES50	16-5/8 (422)	6-3/16 (157)	11 (279)		
VGF22ES60	18-5/8 (473)	6-3/16 (157)	12-1/2 (318)		
2-WAY VALVES, PRESSURE-BALANCED, ANSI CLASS 125. STEM DOWN TO CLOSE. EQUAL PERCENTAGE OR LINEAR FLOW CHARACTERISTIC					
VGF21_P25	10-7/8 (276)	4-3/16 (107)	7 (178)	3-1/2 (89)	13/16 (20)
VGF21_P30	11-3/4 (298)	5-7/8 (150)	7-1/2 (191)		
VGF21_P40	13-7/8 (352)	5-7/8 (150)	9 (229)	5-1/4 (133)	1-1/2 (38)
VGF21_P50	15-3/4 (400)	6-1/8 (156)	10 (254)		
VGF21_P60	17-3/4 (451)	6-1/8 (156)	11 (279)		

M27603

Pressure balanced, flanged globe valves for two-position or modulating control of steam, hot water, or chilled water-glycol solutions up to 50 percent concentration, in closed loop heating, ventilating and air conditioning (HVAC) systems.

- ANSI Class 125 cast iron bodies with flanged end connections
- Equal percentage and linear flow characteristics
- Face-to-face flange dimensions per ANSI/ISA S75.03 standard
- Sizes from 2-1/2 to 6 in.
- Stainless steel trim standard for long life span
- Differential pressure of 175 psi, ANSI Class IV leakage
- Steam inlet pressure up to 125 psig and 353°F maximum temperature
- Self-adjusting packing
- Accurate positioning with equal percentage and linear flow characteristics to ensure precise temperature control
- Universal bonnet for direct-coupled electric and pneumatic actuators for easy mounting, or linkage coupled Modutrol™ Motors and MN/MS Series direct coupled actuators
- Not suitable for combustible gasses

Valve Type: Globe Valve
Body Pattern: Two-way
Valve Action: Stem down to close
Connection Type: Flanged
Controlled Fluid: Chilled or hot water with up to 50% Glycol or Steam. Not for use with fuels.
Actuation: Must be purchased separately
Static Pressure Rating: Meets ANSI 125 Standard
ANSI/ASME Rating: 125
Fluid Temperature Range: 20°F to 250°F, steam 353°F (-7°C to +120°C, steam 180°C)
Maximum Safe Operating Pressure (psi): 175 psig
Maximum Safe Operating Pressure (kPa): 1206 kPa
Maximum Differential Pressure Ratings (Close-off) (psi): 175 psi
Maximum Differential Pressure Ratings (Close-off) (kPa): 1206 kPa
Materials (Body): Cast Iron ASTM A126 Class B
Materials (Seat): Stainless Steel
Materials (Stem): Stainless Steel
Materials (Plug / Ball / Disc): Stainless Steel
Materials (Packing): Spring-loaded PTFE cone rings
Materials (Cartridge): Stainless Steel
Leakage: 0.01% of Cv
Comments: Direct acting; Pressure-balanced. Minimum actuator force is 135# (600N)

Material Number	Pipe Size (inch)	Pipe Size (DN)	Capacity (Cv)	Capacity (Kv)	Flow Characteristic	Stem Travel	Bonnet Size	Comments	Used With
VGF21EP25	2 1/2 in.	DN65	70 Cv	60 Kv	Equal Percentage	3/4 in. (20 mm)	1-3/8 in. (35 mm)	Direct acting; Pressure-balanced. Minimum actuator force is 135# (600N)	ML642X/ML742X; ML6984/ML7984; MP953 (7-1/8 to 13"); Q5024
VGF21EP30	3 in.	DN80	115 Cv	99 Kv	Equal Percentage	3/4 in. (20 mm)	1-3/8 in. (35 mm)	Direct acting; Pressure-balanced. Minimum actuator force is 135# (600N)	ML642X/ML742X; ML6984/ML7984; MP953 (7-1/8 to 13"); Q5024

Flanged Globe Valves

Material Number	Pipe Size (inch)	Pipe Size (DN)	Capacity (Cv)	Capacity (Kv)	Flow Characteristic	Stem Travel	Bonnet Size	Comments	Used With
VGF21EP40	4 in.	DN100	150 Cv	129 Kv	Equal Percentage	1 1/2 in. (38 mm)	1-7/8 in. (47.6 mm)	Direct acting; Pressure-balanced. Minimum actuator force is 400# (1800N)	ML6421B/ML7421B, MP953 (13"); Q5024
VGF21EP50	5 in.	DN125	285 Cv	245 Kv	Equal Percentage	1 1/2 in. (38 mm)	1-7/8 in. (47.6 mm)	Direct acting; Pressure-balanced. Minimum actuator force is 400# (1800N)	ML6421B/ML7421B, MP953 (13"); Q5024
VGF21EP60	6 in.	DN150	365 Cv	314 Kv	Equal Percentage	1 1/2 in. (38 mm)	1-7/8 in. (47.6 mm)	Direct acting; Pressure-balanced. Minimum actuator force is 400# (1800N)	ML6421B/ML7421B, MP953 (13"); Q5024
VGF21LP25	2 1/2 in.	DN65	72 Cv	62 Kv	Linear	3/4 in. (20 mm)	1-3/8 in. (35 mm)	Direct acting; Pressure-balanced. Minimum actuator force is 135# (600N)	ML642X/ML742X; ML6984/ ML7984; MP953 (7-1/8 to 13"); Q5024
VGF21LP30	3 in.	DN80	120 Cv	103 Kv	Linear	3/4 in. (20 mm)	1-3/8 in. (35 mm)	Direct acting; Pressure-balanced. Minimum actuator force is 135# (600N)	ML642X/ML742X; ML6984/ ML7984; MP953 (7-1/8 to 13"); Q5024
VGF21LP40	4 in.	DN100	150 Cv	129 Kv	Linear	1 1/2 in. (38 mm)	1-7/8 in. (47.6 mm)	Direct acting; Pressure-balanced. Minimum actuator force is 400# (1800N)	ML6421B/ML7421B, MP953 (13"); Q5024
VGF21LP50	5 in.	DN125	320 Cv	275 Kv	Linear	1 1/2 in. (38 mm)	1-7/8 in. (47.6 mm)	Direct acting; Pressure-balanced. Minimum actuator force is 400# (1800N)	ML6421B/ML7421B, MP953 (13"); Q5024
VGF21LP60	6 in.	DN150	370 Cv	318 Kv	Linear	1 1/2 in. (38 mm)	1-7/8 in. (47.6 mm)	Direct acting; Pressure-balanced. Minimum actuator force is 400# (1800N)	ML6421B/ML7421B, MP953 (13"); Q5024

V5013B, C Three-Way Flanged Globe Valves

V5013B is a mixing three-way valve. V5013C is a diverting three-way valve. These valves provide proportional or two-position control of hot/chilled water in closed loop heating/cooling systems – offered in sizes 2 1/2 in. through 6 in.

- Not suitable for combustible gases.
- Valves utilize direct mounting valve actuators, Q5020 linkages with Direct Coupled Actuators, or Pneumatic Valve Actuators to operate the valve.
- Constant total flow through full plug travel.
- Stainless steel stem prevents corrosion.
- Class IV (0.01% of Cv) Leakage Rating.

Valve Type: Globe Valve
Body Pattern: Three-way
Connection Type: Flanged
Controlled Fluid: Chilled or hot water with up to 50% Glycol. Not for use with steam or fuels.
Flow Characteristic: Linear (constant total)
Actuation: Must be purchased separately
Ambient Temperature Range: 40°F to 250°F (4°C to 121°C)
Maximum Differential Pressure Ratings (Close-off) (psi): For Quiet Water Service – 20 psid
Maximum Differential Pressure Ratings (Close-off) (kPa): For Quiet Water Service – 138 kPa
Maximum Safe Operating Pressure (psi): 150 psi at 240°F water
Maximum Safe Operating Pressure (kPa): 1034 kPa at 115°C water
Static Pressure Rating: Meets ANSI 125 Standard
ANSI/ASME Rating: 125
Materials (Body): Cast Iron
Materials (Seat): Bronze
Materials (Stem): Stainless Steel
Materials (Packing): Teflon Cone

Dimensions in inches (millimeters)

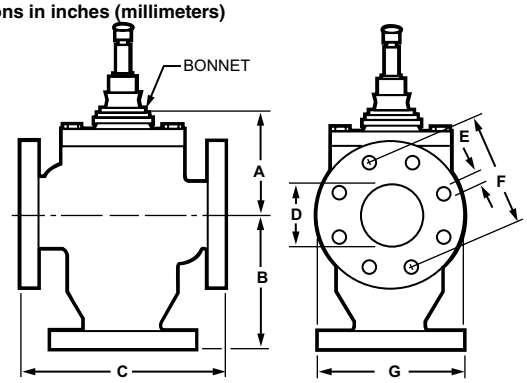

V5013B,C DIMENSIONS

	VALVE SIZE IN INCHES (MM)				
	2-1/2 (DN65)	3 (DN80)	4 (DN100)	5 (DN125)	6 (DN150)
A	4-1/2 (114)	5-1/4 (133)	5-7/8 (149)	6-1/4 (159)	7-1/4 (184)
B	6-7/17 (164)	6-5/8 (168)	8-11/16 (221)	9-5/8 (244)	10-11/16 (271)
C	9-1/2 (241)	11 (279)	13 (330)	15 (381)	16-1/2 (419)
D	2-1/2 (64)	3 (76)	4 (102)	5 (127)	6 (152)
E	3/4 (19)	3/4 (19)	3/4 (19)	7/8 (22)	7/8 (22)
F	5-1/2 (140)	6 (152)	7-1/2 (191)	8-1/2 (216)	9-1/2 (241)
G	7 (178)	7-1/2 (191)	9 (229)	10 (254)	11 (279)

M16833

Material Number	Pipe Size (inch)	Pipe Size (DN)	Capacity (Cv)	Capacity (Kv)	Stem Travel	Bonnet Size	Valve Action	Comments	Used With
V5013B1003/U	2 1/2 in.	DN65	63 Cv	54 Kv	3/4 in. (20 mm)	1-3/8 in. (35 mm)	Stem up increases B to AB flow	Mixing	ML6984/ML7984; Q5001/Modutrol IV Motor; ML7420/ML7421A/ML7425; ML6420, 21A, 25; Q5020; Q5024
V5013B1011/U	3 in.	DN80	100 Cv	85 Kv	3/4 in. (20 mm)	1-3/8 in. (35 mm)	Stem up increases B to AB flow	Mixing	ML6984/ML7984; Q5001/Modutrol IV Motor; ML6420, 21A, 25; ML7420/ML7421A/ML7425; Q5020; Q5024
V5013B1029/U	4 in.	DN100	160 Cv	137 Kv	1 1/2 in. (38 mm)	1-7/8 in. (47.6 mm)	Stem up increases B to AB flow	Mixing	ML7421B; ML6421B; Q5001/Modutrol IV Motor; Q5024
V5013B1037/U	5 in.	DN125	250 Cv	214 Kv	1 1/2 in. (38 mm)	1-7/8 in. (47.6 mm)	Stem up increases B to AB flow	Mixing	ML6421B; ML7421B; Q5001/Modutrol IV Motor; Q5024
V5013B1045/U	6 in.	DN150	360 Cv	308 Kv	1 1/2 in. (38 mm)	1-7/8 in. (47.6 mm)	Stem up increases B to AB flow	Mixing	ML7421B; ML6421B; Q5001/Modutrol IV Motor; Q5024
V5013C1001/U	2 1/2 in.	DN65	63 Cv	54 Kv	3/4 in. (20 mm)	1-3/8 in. (35 mm)	Stem up increases AB to A flow	Diverting	ML6984/ML7984; Q5001/Modutrol IV Motor; ML7420/ML7421A/ML7425; ML6420, 21A, 25; Q5020; Q5024
V5013C1019/U	3 in.	DN80	100 Cv	85 Kv	3/4 in. (20 mm)	1-3/8 in. (35 mm)	Stem up increases AB to A flow	Diverting	ML6984/ML7984; Q5001/Modutrol IV Motor; ML6420, 21A, 25; ML7420/ML7421A/ML7425; Q5020; Q5024
V5013C1027/U	4 in.	DN100	160 Cv	137 Kv	1 1/2 in. (38 mm)	1-7/8 in. (47.6 mm)	Stem up increases AB to A flow	Diverting	ML6421B; ML7421B; Q5001/Modutrol IV Motor; Q5024
V5013C1035/U	5 in.	DN125	250 Cv	214 Kv	1 1/2 in. (38 mm)	1-7/8 in. (47.6 mm)	Stem up increases AB to A flow	Diverting	ML7421B; ML6421B; Q5001/Modutrol IV Motor; Q5024
V5013C1043/U	6 in.	DN150	360 Cv	308 Kv	1 1/2 in. (38 mm)	1-7/8 in. (47.6 mm)	Stem up increases AB to A flow	Diverting	ML6421B; ML7421B; Q5001/Modutrol IV Motor; Q5024

VGF3 Three-way Flanged Globe Valves

Flanged globe valves for two-position or modulating control in heating, ventilating and air conditioning (HVAC) systems. Can be operated by ML6984/7984, ML6420/6425, ML6421/7421 Actuators, MP953 Pneumatic Actuators, Modutrol Motors with Q5001 valve linkage, or MN/MS direct coupled actuators (DCA).

- ANSI Class 125 and Class 250 cast iron bodies with flanged end connections.
- Face-to-face flange dimensions per ANSI/ISA S75.03 standard.
- Sizes from 2-1/2 to 6 inches.
- Stainless steel trim standard for long life span.
- Self-adjusting packing.
- Accurate positioning with equal percentage and linear flow characteristics to ensure precise temperature control.
- Universal bonnet for direct-coupled electric and pneumatic actuators for easy mounting, or linkage coupled Modutrol™ Motors and MN/MS Series direct coupled actuators.
- Constant total flow throughout full plug travel (3-way diverting models).
- Not suitable for combustible gasses.

Valve Type: Globe Valve
Body Pattern: Three-way
Connection Type: Flanged
Controlled Fluid: Chilled or hot water with up to 50% Glycol. Not for use with steam or fuels.
Flow Characteristic: Mixing Valves-Equal Percentage (A-AB); Diverting Valves-Linear (constant total)
Actuation: Must be purchased separately
Fluid Temperature Range: 20°F to 250°F (-7°C to +120°C)
Static Pressure Rating: VGF31-Meets ANSI 125 Standard; VGF32-Meets ANSI 250 Standard
ANSI/ASME Rating: VGF31-125; VGF32-250
Materials (Body): Cast Iron ASTM A126 Class B
Materials (Seat): Stainless Steel
Materials (Stem): Stainless Steel
Materials (Plug / Ball / Disc): Stainless Steel
Materials (Packing): Spring-loaded PTFE cone rings
Materials (Cartridge): Stainless Steel
Leakage: Mixing-Port A seat leakage: 0.5%; Port B seat leakage 1.0%; For Supply mixing control; use diverting value for boiler/chiller bypass; Diverting-Port A seat leakage: 0.05%; Port B seat leakage 0.1%

Dimensions in inches (millimeters)

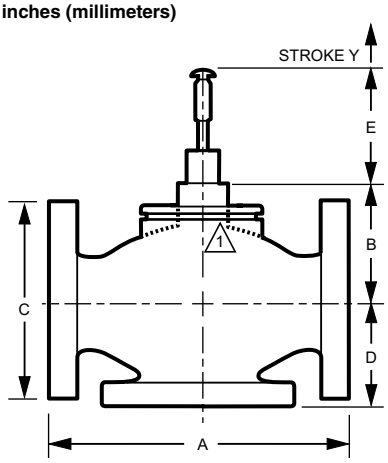

1 DOTTED LINE REPRESENTS ANSI 125 VALVE BONNET.

MODEL NUMBER	DIMENSIONS, IN. (MM)					
	A	B	C	D	E	Y
3-WAY MIXING VALVES, ANSI CLASS 125. STEM UP TO CLOSE A-AB						
VGF31EM25	10-7/8 (276)	3 (76)	7 (178)	3-3/4 (95)	4-3/16 (107)	13/16 (20)
VGF31EM30	11-3/4 (298)	4-3/16 (107)	7-1/2 (191)	4-3/8 (111)		
VGF31EM40	13-7/8 (352)	5-8/16 (140)	9 (229)	5-1/8 (130)	6-11/16 (170)	1-1/2 (38)
VGF31EM50	15-3/4 (400)	5-3/8 (137)	10 (254)	5-3/4 (146)		
VGF31EM60	17-3/4 (451)	5-11/16 (145)	11 (279)	6-5/8 (168)		
3-WAY MIXING VALVES, ANSI CLASS 250. STEM UP TO CLOSE A-AB						
VGF32EM25	11-1/2 (292)	4-3/8 (112)	7-1/2 (191)	3-3/4 (95)	4-3/16 (107)	13/16 (20)
VGF32EM30	12-1/2 (318)	6-3/8 (161)	8-1/4 (210)	4-3/8 (111)		
VGF32EM40	14-1/2 (368)	5-7/8 (150)	10 (254)	5-1/8 (130)	6-11/16 (170)	1-1/2 (38)
VGF32EM50	16-5/8 (422)	6-3/16 (157)	11 (279)	5-3/4 (146)		
VGF32EM60	18-5/8 (473)	6-3/16 (157)	12-1/2 (318)	6-5/8 (168)		
3-WAY DIVERTING VALVES, ANSI CLASS 125. STEM DOWN TO CLOSE AB-A						
VGF31LD25	10-7/8 (276)	3 (76)	7 (178)	3-3/4 (95)	4-3/16 (107)	13/16 (20)
VGF31LD30	11-3/4 (298)	4-3/16 (107)	7-1/2 (191)	4-3/8 (111)		
VGF31LD40	13-7/8 (352)	5-8/16 (140)	9 (229)	5-1/8 (130)	6-11/16 (170)	1-1/2 (38)
VGF31LD50	15-3/4 (400)	5-3/8 (137)	10 (254)	5-3/4 (146)		
VGF31LD60	17-3/4 (451)	5-11/16 (145)	11 (279)	6-5/8 (168)		
3-WAY DIVERTING VALVES, ANSI CLASS 250. STEM DOWN TO CLOSE AB-A						
VGF32LD25	11-1/2 (292)	4-3/8 (112)	7-1/2 (191)	3-3/4 (95)	4-3/16 (107)	13/16 (20)
VGF32LD30	12-1/2 (318)	6-3/8 (161)	8-1/4 (210)	4-3/8 (111)		
VGF32LD40	14-1/2 (368)	5-7/8 (150)	10 (254)	5-1/8 (130)	6-11/16 (170)	1-1/2 (38)
VGF32LD50	16-5/8 (422)	6-3/16 (157)	11 (279)	5-3/4 (146)		
VGF32LD60	18-5/8 (473)	6-3/16 (157)	12-1/2 (318)	6-5/8 (168)		

M27604

Material Number	Pipe Size (inch)	Pipe Size (DN)	Capacity (Cv)	Capacity (Kv)	Maximum Safe Operating Pressure (psi)	Maximum Safe Operating Pressure (kPa)	Maximum Differential Pressure Ratings (Close-off) (psi)	Maximum Differential Pressure Ratings (Close-off) (kPa)	Stem Travel	Bonnet Size	Valve Action	Used With
VGF31EM25	2 1/2 in.	DN65	70 Cv	60 Kv	175 psig at 130°F (66°C)	1206 kPa at 66°C (130°F)	87 psi	599 kPa	3/4 in. (20 mm)	1-3/8 in. (35 mm)	Mixing, step up to close A-AB	ML6984/ML7984; ML6420/21A/25; ML7420/21A/25; Q5020/DCA; Q5001/Modutrol IV Motor; MP953; Q5024
VGF31EM30	3 in.	DN80	115 Cv	99 Kv	175 psig at 130°F (66°C)	1206 kPa at 66°C (130°F)	58 psi	400 kPa	3/4 in. (20 mm)	1-3/8 in. (35 mm)	Mixing, step up to close A-AB	ML6984/ML7984; ML6420/21A/25; ML7420/21A/25; Q5020/DCA; Q5001/Modutrol IV Motor; MP953; Q5024
VGF31EM40	4 in.	DN100	170 Cv	146 Kv	175 psig at 130°F (66°C)	1206 kPa at 66°C (130°F)	34 psi	234 kPa	1 1/2 in. (38 mm)	1-7/8 in. (47.6 mm)	Mixing, step up to close A-AB	ML6421B; ML7421B; Q5001/ Modutrol IV Motor; MP953; Q5024
VGF31EM50	5 in.	DN125	320 Cv	275 Kv	175 psig at 130°F (66°C)	1206 kPa at 66°C (130°F)	13 psi	90 kPa	1 1/2 in. (38 mm)	1-7/8 in. (47.6 mm)	Mixing, step up to close A-AB	ML6421B; ML7421B; Q5001/ Modutrol IV Motor; MP953; Q5024
VGF31EM60	6 in.	DN150	370 Cv	318 Kv	175 psig at 130°F (66°C)	1206 kPa at 66°C (130°F)	13 psi	90 kPa	1 1/2 in. (38 mm)	1-7/8 in. (47.6 mm)	Mixing, step up to close A-AB	ML6421B; ML7421B; Q5001/ Modutrol IV Motor; MP953; Q5024
VGF31LD25	2 1/2 in.	DN65	70 Cv	60 Kv	175 psig at 130°F (66°C)	1206 kPa at 66°C (130°F)	69 psi	475 kPa	3/4 in. (20 mm)	1-3/8 in. (35 mm)	Diverting, stem down to close AB-A	ML6984/ML7984; ML6420/21A/25; ML7420/21A/25; Q5020/DCA; Q5001/Modutrol IV Motor; MP953; Q5024
VGF31LD30	3 in.	DN80	120 Cv	103 Kv	175 psig at 130°F (66°C)	1206 kPa at 66°C (130°F)	34 psi	234 kPa	3/4 in. (20 mm)	1-3/8 in. (35 mm)	Diverting, stem down to close AB-A	ML6984/ML7984; ML6420/21A/25; ML7420/21A/25; Q5020/DCA; Q5001/Modutrol IV Motor; MP953; Q5024
VGF31LD40	4 in.	DN100	160 Cv	138 Kv	175 psig at 130°F (66°C)	1206 kPa at 66°C (130°F)	34 psi	234 kPa	1 1/2 in. (38 mm)	1-7/8 in. (47.6 mm)	Diverting, stem down to close AB-A	ML6421B; ML7421B; Q5001/ Modutrol IV Motor; MP953; Q5024
VGF31LD50	5 in.	DN125	285 Cv	245 Kv	175 psig at 130°F (66°C)	1206 kPa at 66°C (130°F)	13 psi	90 kPa	1 1/2 in. (38 mm)	1-7/8 in. (47.6 mm)	Diverting, stem down to close AB-A	ML6421B; ML7421B; Q5001/ Modutrol IV Motor; MP953; Q5024
VGF31LD60	6 in.	DN150	380 Cv	327 Kv	175 psig at 130°F (66°C)	1206 kPa at 66°C (130°F)	13 psi	90 kPa	1 1/2 in. (38 mm)	1-7/8 in. (47.6 mm)	Diverting, stem down to close AB-A	ML6421B; ML7421B; Q5001/ Modutrol IV Motor; MP953; Q5024
VGF32EM25	2 1/2 in.	DN65	70 Cv	60 Kv	400 psig	2758 kPa	87 psi	599 kPa	3/4 in. (20 mm)	1-3/8 in. (35 mm)	Mixing, step up to close A-AB	ML6984/ML7984; ML6420/21A/25; ML7420/21A/25; Q5020/DCA; Q5001/Modutrol IV Motor; MP953; Q5024
VGF32EM30	3 in.	DN80	115 Cv	99 Kv	400 psig	2758 kPa	58 psi	400 kPa	3/4 in. (20 mm)	1-3/8 in. (35 mm)	Mixing, step up to close A-AB	ML6984/ML7984; ML6420/21A/25; ML7420/21A/25; Q5020/DCA; Q5001/Modutrol IV Motor; MP953; Q5024

Flanged Globe Valves

Material Number	Pipe Size (inch)	Pipe Size (DN)	Capacity (Cv)	Capacity (Kv)	Maximum Safe Operating Pressure (psi)	Maximum Safe Operating Pressure (kPa)	Maximum Differential Pressure Ratings (Close-off) (psi)	Maximum Differential Pressure Ratings (Close-off) (kPa)	Stem Travel	Bonnet Size	Valve Action	Used With
VGF32EM40	4 in.	DN100	170 Cv	146 Kv	400 psig	2758 kPa	34 psi	234 kPa	1 1/2 in. (38 mm)	1-7/8 in. (47.6 mm)	Mixing, step up to close A-AB	ML6421B; ML7421B; Q5001/ Modutrol IV Motor; MP953; Q5024
VGF32EM50	5 in.	DN125	320 Cv	275 Kv	400 psig	2758 kPa	13 psi	90 kPa	1 1/2 in. (38 mm)	1-7/8 in. (47.6 mm)	Mixing, step up to close A-AB	ML6421B; ML7421B; Q5001/ Modutrol IV Motor; MP953; Q5024
VGF32EM60	6 in.	DN150	370 Cv	318 Kv	400 psig	2758 kPa	13 psi	90 kPa	1 1/2 in. (38 mm)	1-7/8 in. (47.6 mm)	Mixing, step up to close A-AB	ML6421B; ML7421B; Q5001/ Modutrol IV Motor; MP953; Q5024
VGF32LD25	2 1/2 in.	DN65	70 Cv	60 Kv	400 psig	2758 kPa	69 psi	475 kPa	3/4 in. (20 mm)	1-3/8 in. (35 mm)	Diverting, stem down to close AB-A	ML6984/ML7984; ML6420/21A/25; ML7420/21A/25; Q5020/DCA; Q5001/Modutrol IV Motor; MP953; Q5024
VGF32LD30	3 in.	DN80	120 Cv	103 Kv	400 psig	2758 kPa	34 psi	234 kPa	3/4 in. (20 mm)	1-3/8 in. (35 mm)	Diverting, stem down to close AB-A	ML6984/ML7984; ML6420/21A/25; ML7420/21A/25; Q5020/DCA; Q5001/Modutrol IV Motor; MP953; Q5024
VGF32LD40	4 in.	DN100	160 Cv	138 Kv	400 psig	2758 kPa	34 psi	234 kPa	1 1/2 in. (38 mm)	1-7/8 in. (47.6 mm)	Diverting, stem down to close AB-A	ML6421B; ML7421B; Q5001/ Modutrol IV Motor; MP953; Q5024
VGF32LD50	5 in.	DN125	285 Cv	245 Kv	400 psig	2758 kPa	13 psi	90 kPa	1 1/2 in. (38 mm)	1-7/8 in. (47.6 mm)	Diverting, stem down to close AB-A	ML6421B; ML7421B; Q5001/ Modutrol IV Motor; MP953; Q5024
VGF32LD60	6 in.	DN150	380 Cv	327 Kv	400 psig	2758 kPa	13 psi	90 kPa	1 1/2 in. (38 mm)	1-7/8 in. (47.6 mm)	Diverting, stem down to close AB-A	ML6421B; ML7421B; Q5001/ Modutrol IV Motor; MP953; Q5024

V5011F, G Two-Way Threaded Globe Valves

Used for two-position or modulating control of steam and water and glycol solutions (to 50 percent concentration) in heating or cooling systems.

- Sizes range from 2-1/2 to 3 inches.
- Direct acting.
- High pressure steam models with stainless steel trim.
- Spring-loaded, self-adjusting packing.
- Stainless steel stem prevents corrosion.
- Valve designs provide equal percentage characteristics of flow for close control of water, and linear characteristic of flow for close control of steam or chilled water.
- Valves utilize direct mounting, electric or pneumatic linear valve actuators; Q5001 linkage with Modutrol Motor; or Q5020 linkages with Direct Coupled Actuators to operate the valve.

Valve Type: Globe Valve
Body Pattern: Two-way, Straight-through
Valve Action: Stem down to close
Connection Type: Female NPT
Actuation: Must be purchased separately
Fluid Temperature Range: 40°F to 337°F (4°C to 169°C)
Maximum Differential Pressure Ratings (Close-off) (psi): For Quiet Water Service – 20 psid
Maximum Differential Pressure Ratings (Close-off) (kPa): For Quiet Water Service – 138 kPa
Static Pressure Rating: Meets ANSI 150 Standard
ANSI/ASME Rating: 150
Stem Travel: 3/4 in. (20 mm)
Bonnet Size: 1-3/8 in. (35 mm)
Materials (Body): Red Brass
Materials (Seat): V5011F-Brass; V5011G-Stainless Steel
Materials (Stem): Stainless Steel
Materials (Plug / Bal / Disc): V5011F-Brass plug with Teflon® disc; V5011G-Stainless Steel plug with carbon-loaded Teflon® disc
Materials (Packing): V5011F-Teflon and Nitrile; V5011G-Teflon Cone
Leakage: 0.5% of Cv
Approvals, CRN Number: 0C0861.96R1
Used With: Q5001/Modutrol IV Motor; MP953; Q5020/DCA; ML6984/ML7984; ML6420, 21A, 25; ML7420/ML7421A/ML7425; Q5024

Dimensions in inches (millimeters)

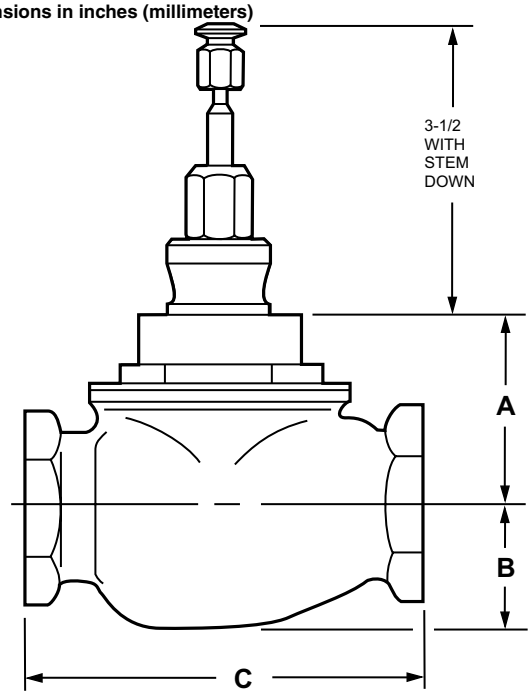

V5011F,G

BODY STYLE	PIPE SIZE (in.)	DIMENSIONS					
		A		B		C	
		in	mm	in	mm	in	mm
V5011F,G THREADED DIRECT BODY	1/2	2	51	1-3/4	45	3-3/8	86
	3/4	1-3/4	45	1-3/4	45	3-3/8	86
	1	1-7/8	48	1-3/4	45	4-1/4	108
	1-1/4	2	51	1-5/8	42	4-7/8	124
	1-1/2	2-7/8	73	1-5/8	42	5-5/8	143
	2	3-1/8	80	2	51	5-5/8	143
	2-1/2	2-3/4	70	2-3/8	61	7-1/2	191
	3	3-1/8	80	2-5/8	67	8-7/8	226

M2804A

Material Number	Pipe Size (inch)	Pipe Size (DN)	Capacity (Cv)	Capacity (Kv)	Maximum Safe Operating Pressure (psi)	Maximum Safe Operating Pressure (kPa)	Controlled Fluid	Flow Characteristic
V5011F1105/U	2 1/2 in.	DN65	63 Cv	54 Kv	250 psi at 100°F water; 217 psi at 250°F water; 15 psi steam	1724 kPa at 38°C water; 1496 kPa at 121°F water; 100 kPa steam	Chilled or hot water with up to 50% Glycol. Not for use with steam or fuels.	Equal Percentage
V5011F1113/U	3 in.	DN80	100 Cv	85 Kv	250 psi at 100°F water; 217 psi at 250°F water; 15 psi steam	1724 kPa at 38°C water; 1496 kPa at 121°F water; 100 kPa steam	Chilled or hot water with up to 50% Glycol. Not for use with steam or fuels.	Equal Percentage
V5011G1111/U	2 1/2 in.	DN65	63 Cv	54 Kv	240 psi at 150°F water; 100 psi at 337°F steam	240 psi at 66°C water; 690 kPa at 69°C steam	Chilled or hot water with up to 50% Glycol or Steam. Not for use with fuels.	Linear
V5011G1129/U	3 in.	DN80	100 Cv	85 Kv	240 psi at 150°F water; 100 psi at 337°F steam	240 psi at 66°C water; 690 kPa at 69°C steam	Chilled or hot water with up to 50% Glycol or Steam. Not for use with fuels.	Linear

V5011N Two-way Globe Valves

Dimensions in inches (millimeters)

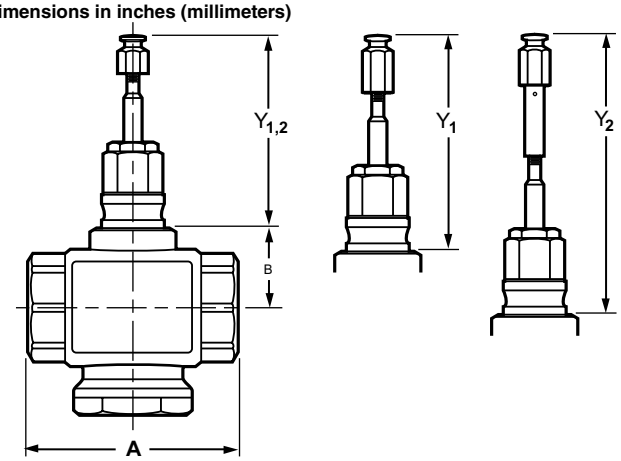

VALVE SIZE (IN)	A in. (mm)	B in. (mm)
1/2	3-1/4 (83)	1-9/16 (40)
3/4		
1	4-1/16 (103)	
1-1/4	4-3/16 (106)	
1-1/2	4-3/4 (120)	1-13/16 (47)
2	5-1/4 (134)	

VALVE	Y_1 in. (mm)	Y_2[a] in. (mm)
V5011N1XXX OR V5011N2XXX	3-1/2 (89)	5-1/4 (133)
	STEM FULLY DOWN	
V5011N3XXX	4-3/16 (107)	5-15/16 (151)
	STEM FULLY UP	

[a]Y_2 WITH STEM EXTENSION FOR MP953C,E (8 IN. ONLY)

M17378A

NPT globe valves for two-position or modulating control of steam or water with glycol solutions up to 50% in heating, ventilating and air conditioning (HVAC) systems. Used in applications requiring tight shut off.

- Sizes range from 1/2 to 2 inches.
- Direct and reverse acting.
- High pressure steam models with stainless steel trim.
- Spring-loaded, self-adjusting packing.
- Stainless steel stem prevents corrosion.
- Valve designs provide equal percentage characteristics of flow for close control of water, and linear characteristic of flow for close control of steam or chilled water.
- Valves utilize direct mounting, electric or pneumatic linear valve actuators; Q5001 linkage with Modutrol Motor; or Q5020 linkages with direct coupled rotary actuators to operate the valve.

Valve Type: Globe Valve
Body Pattern: Two-way
Valve Action: 1000 and 2000 series-Stem down to close; 3000 series-Stem up to close
Connection Type: Female NPT
Controlled Fluid: 1000 and 3000 series-Chilled or hot water with up to 50% Glycol. 2000 series-Chilled or hot water with up to 50% Glycol; Steam; Not for use with fuels or computable gases
Flow Characteristics: 1000 and 3000 series-Equal Percentage; 2000 series-Linear
Actuation: Must be purchased separately
Ambient Temperature: 1000 and 3000 series-36°F to 248°F water; 2000 series-36°F to 248°F water; 340°F steam (1000 and 3000 series-2°C to 120°C water; 2000 series-2°C to 120°C water; 171°C steam)
Maximum Differential Pressure Ratings (Close-off) (psi): 240 psi; For Quiet Water Service – 20 psid
Maximum Differential Pressure Ratings (Close-off) (kPa): 1655 kPa; For Quiet Water Service – 138 kPa
Static Pressure Rating: Meets ANSI 150 Standard
ANSI/ASME Rating: 150
Stem Travel: 3/4 in. (20 mm)
Bonnet Size: 1-3/8 in. (35 mm)
Materials (Body): Red Brass
Materials (Stem): Stainless Steel
Materials (Plug / Ball / Disc): 1000 and 3000 series-Brass; 2000 series-Stainless Steel
Materials (Packing): Teflon
Materials (Cartridge): 1000 and 3000 series-Brass; 2000 series-Stainless Steel
Leakage: Seat: 0.05% of Cv
Approvals, CRN Number: 0C0861.96R1
Used With: Q5001/Modutrol IV Motor; MP953; Q5020/DCA; ML6984/ML7984; ML6420, 21A, 25; ML7420/ML7421A/ML7425; Q5024

Material Number	Pipe Size (inch)	Pipe Size (DN)	Capacity (Cv)	Capacity (Kv)	Maximum Safe Operating Pressure (psi)	Maximum Safe Operating Pressure (kPa)	Materials (Seat)
V5011N1008/U	1/2 in.	DN15	0.73 Cv	0.63 Kv	217 psi at 248°F	1500 kPa at 120°C	Stainless Steel
V5011N1016/U	1/2 in.	DN15	1.2 Cv	1.0 Kv	217 psi at 248°F	1500 kPa at 120°C	Stainless Steel
V5011N1024/U	1/2 in.	DN15	1.85 Cv	1.6 Kv	217 psi at 248°F	1500 kPa at 120°C	Stainless Steel
V5011N1032/U	1/2 in.	DN15	2.9 Cv	2.5 Kv	217 psi at 248°F	1500 kPa at 120°C	Stainless Steel
V5011N1040/U	1/2 in.	DN15	4.7 Cv	4.0 Kv	217 psi at 248°F	1500 kPa at 120°C	Stainless Steel
V5011N1057/U	3/4 in.	DN20	7.3 Cv	6.3 Kv	217 psi at 248°F	1500 kPa at 120°C	Stainless Steel
V5011N1065/U	1 in.	DN25	11.7 Cv	10 Kv	217 psi at 248°F	1500 kPa at 120°C	Stainless Steel
V5011N1073/U	1 1/4 in.	DN32	18.7 Cv	16 Kv	217 psi at 248°F	1500 kPa at 120°C	Stainless Steel
V5011N1081/U	1 1/2 in.	DN40	29 Cv	25 Kv	217 psi at 248°F	1500 kPa at 120°C	Stainless Steel
V5011N1099/U	2 in.	DN50	46.8 Cv	40 Kv	217 psi at 248°F	1500 kPa at 120°C	Stainless Steel
V5011N2006/U	1/2 in.	DN15	0.73 Cv	0.63 Kv	100 psi at 337°F steam	690 kPa at 169°C steam	Stainless Steel
V5011N2014/U	1/2 in.	DN15	1.2 Cv	1.0 Kv	100 psi at 337°F steam	690 kPa at 169°C steam	Stainless Steel
V5011N2022/U	1/2 in.	DN15	1.85 Cv	1.6 Kv	100 psi at 337°F steam	690 kPa at 169°C steam	Stainless Steel
V5011N2030/U	1/2 in.	DN15	2.9 Cv	2.5 Kv	100 psi at 337°F steam	690 kPa at 169°C steam	Stainless Steel
V5011N2048/U	1/2 in.	DN15	4.7 Cv	4.0 Kv	100 psi at 337°F steam	690 kPa at 169°C steam	Stainless Steel
V5011N2055/U	3/4 in.	DN20	7.3 Cv	6.3 Kv	100 psi at 337°F steam	690 kPa at 169°C steam	Stainless Steel
V5011N2063/U	1 in.	DN25	11.7 Cv	10 Kv	100 psi at 337°F steam	690 kPa at 169°C steam	Stainless Steel
V5011N2071/U	1 1/4 in.	DN32	18.7 Cv	16 Kv	100 psi at 337°F steam	690 kPa at 169°C steam	Stainless Steel

Material Number	Pipe Size (inch)	Pipe Size (DN)	Capacity (Cv)	Capacity (Kv)	Maximum Safe Operating Pressure (psi)	Maximum Safe Operating Pressure (kPa)	Materials (Seat)
V5011N2089/U	1 1/2 in.	DN40	29 Cv	25 Kv	100 psi at 337°F steam	690 kPa at 169°C steam	Stainless Steel
V5011N2097/U	2 in.	DN50	46.8 Cv	40 Kv	100 psi at 337°F steam	690 kPa at 169°C steam	Stainless Steel
V5011N3004/U	1/2 in.	DN15	2.9 Cv	2.5 Kv	217 psi at 248°F	1500 kPa at 120°C	Stainless Steel
V5011N3012/U	1/2 in.	DN15	4.7 Cv	4.0 Kv	217 psi at 248°F	1500 kPa at 120°C	Stainless Steel
V5011N3020/U	3/4 in.	DN20	7.3 Cv	6.3 Kv	217 psi at 248°F	1500 kPa at 120°C	Integral Brass
V5011N3038/U	1 in.	DN25	11.7 Cv	10 Kv	217 psi at 248°F	1500 kPa at 120°C	Integral Brass
V5011N3046/U	1 1/4 in.	DN32	18.7 Cv	16 Kv	217 psi at 248°F	1500 kPa at 120°C	Integral Brass

V5013N Three-Way Threaded Globe Valves

The V5013N is a three-way threaded globe valve that controls hot water, cold water, and glycol solutions (up to 50 percent concentration), in heating or cooling HVAC applications. The valves direct flow from one or two inlets to a common outlet.

- Red brass body with NPT-threaded connections.
- Stainless steel stem and brass plug.
- Low seat leakage rating, < 0.05%.
- Spring-loaded, self adjusting packing.
- 50:1 rangeability per VDI/VDE 2173.
- Constant total flow throughout full stem travel.
- Accurate positioning to ensure state-of-the-art temperature control.
- Sizes range from 1/2 inch to 2 inches.
- Valves utilize direct mounting, electric or pneumatic valve actuators; Q5001 linkage with Modutrol Motor; or Q5020 linkages with Direct Coupled Actuators to operate the valve.
- Repack and rebuild kits available for field servicing.
- Not suitable for combustible gases.

Dimensions in inches (millimeters)

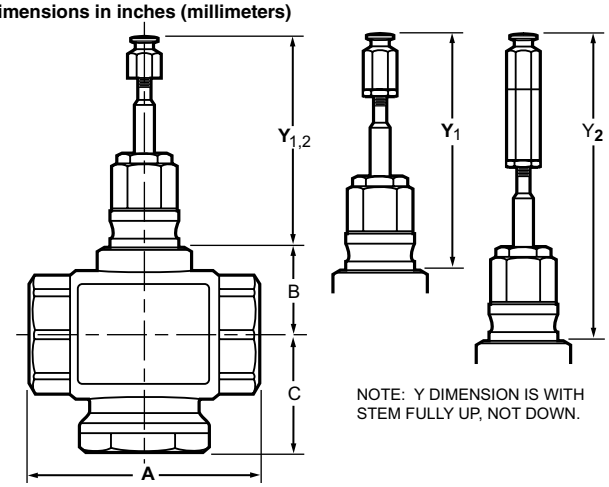

VALVE SIZE	A	B	C	Y_1	Y_2 [a]
				STEM UP	
1/2 (DN15)	3-1/4 (83)	1-9/16 (40)	2-9/16 (65)	4-3/16 (106)	5-15/16 (151)
3/4 (DN20)	3-1/4 (83)	1-9/16 (40)	2-9/16 (65)		
1 (DN25)	4-1/16 (103)	1-9/16 (40)	2-5/8 (67)		
1-1/4 (DN32)	4-3/16 (106)	1-9/16 (40)	2-7/8 (73)		
1-1/2 (DN40)	4-3/4 (121)	1-13/16 (46)	3 (76)		
2 (DN50)	5-1/4 (134)	1-13/16 (46)	3-5/16 (84)		

[a] Y_2 WITH STEM EXTENSION FOR MP953C,E (8 IN. ONLY)

M12901A

Valve Type: Globe Valve
Body Pattern: Three-way mixing, A-B-AB porting
Valve Action: Mixing
Connection Type: Female NPT
Controlled Fluid: Chilled or hot water with up to 50% Glycol. Not for use with fuels.
Flow Characteristic: Equal Percentage (A-AB); Linear (B-AB)
Actuation: Must be purchased separately
Ambient Temperature Range: 36°F to 248°F water (2°C to 120°C water)
Maximum Differential Pressure Ratings (Close-off) (psi): 240 psi; For Quiet Water Service – 20 psid
Maximum Differential Pressure Ratings (Close-off) (kPa): 1655 kPa; For Quiet Water Service – 138 kPa
Maximum Safe Operating Pressure (psi): 217 psi at 248°F
Maximum Safe Operating Pressure (kPa): 1500 kPa at 120°C
Static Pressure Rating: Meets ANSI 150 Standard
ANSI/ASME Rating: 150
Stem Travel: 3/4 in. (20 mm)
Bonnet Size: 1 3/8 in. (35 mm)
Materials (Body): Red Brass
Materials (Stem): Stainless Steel
Materials (Plug / Ball / Disc): Brass
Materials (Packing): Teflon/EPDM
Leakage: 0.05% of Cv
Approvals, CRN Number: 0C0861.96R1
Used With: Q5001/Modutrol IV Motor; Q5020/DCA; ML6984/ML7984; ML6420, 21A, 25; ML7420/ML7421A/ML7425; Q5024

Material Number	Pipe Size (inch)	Pipe Size (DN)	Capacity (Cv)	Capacity (Kv)	Materials (Seat)
V5013N1030/U	1/2 in.	DN15	2.9 Cv	2.5 Kv	Replaceable stainless steel (upper), replaceable brass (lower)
V5013N1048/U	1/2 in.	DN15	4.7 Cv	4.0 Kv	Replaceable stainless steel (upper), replaceable brass (lower)
V5013N1055/U	3/4 in.	DN20	7.3 Cv	6.3 Kv	Integral brass (upper), replaceable brass (lower)
V5013N1063/U	1 in.	DN25	11.7 Cv	10 Kv	Integral brass (upper), replaceable brass (lower)
V5013N1071/U	1 1/4 in.	DN32	18.7 Cv	16 Kv	Integral brass (upper), replaceable brass (lower)
V5013N1089/U	1 1/2 in.	DN40	29 Cv	25 Kv	Integral brass (upper), replaceable brass (lower)
V5013N1097/U	2 in.	DN50	46.8 Cv	40 Kv	Integral brass (upper), replaceable brass (lower)

Globe Valve Accessories

Material Number	Description	Used With	
14002734-001/U	Packing Grease Plastilube #2 2CC Tube		
14002734-002/U	Lubricant, packing, AMOCO H-100		
14004552-001/U	Packing Nut for V5011F, G	V5011F, G	
14004623-001/U	Stem button for V5011F/G	V5011F, G	
205699A/U	Stem/Bonnet Adapter for 2 1/2 in. and 3 in. V33xx and V34xx Flanged Valves.	2 1/2 inch and 3 inch V33xx and V34xx Flanged Valves	
209116/U	Stem Button for 4 inch to 6 inch V5011, V3350, and VGF valves	V3350; V5011, VGF	
209117/U	Stem Button for 2 1/2 inch to 3 inch V5011, V3350, and VGF valves	V5011; V3350, VGF	
310498/U	Packing Spring, V5011A, C, J	V5011A, C, J	
310506/U	Packing Follower		
310509/U	Packing Gland, V5011 1/2 in. to 1 1/4 in.	V5011	
310536/U	Valve Seat, V5011A, C, F, G, Cv 2.5	V5011A, C, F, G	
310537/U	Valve Seat, V5011A, C, F, G, Cv 4	V5011A, C, F, G	
310538/U	Valve Seat, V5011A, C, F, G, Cv 6.3	V5011A, C, F, G	
310623/U	Packing, Teflon Cone, V5011, Steam	V5011	
310890/U	Valve Seat, V5011A, C, F, G, Cv 6.3	V5011A, C, F, G	
311057/U	Packing Grease Plastilube #2 1 3/4 oz Tube		
311077/U	Valve Seat, V5011A, C, F, G, Cv 10	V5011A, C, F, G	
311078/U	Valve Seat, V5011A, C, F, G, Cv	V5011A, C, F, G	
311095A/U	Stem and Disc holder, V5011A, C, F, Cv	V5011A	
311291	Seat, V5011A, C, F, G, 2 in., Cv 25	V5011A, C, F, G	
311619A/U	Stem Assembly, V5011 A, C, F, G, 3/4 in. travel, 1 1/2 in. to 3 in. NPT	V5011A	
311731/U	Seat, V5011A, C, F, G, 2 1/2 in., Cv 63	V5011A, C, F, G	
311734/U	Seat, V5011A, C, F, G, 3 in., Cv 100	V5011A, C, F, G	
311745/U	Disc Holder		
311860/U	Plug, V5011A, F, 2 1/2 in., Cv 63	V5011A	
311861/U	Plug, V5011A, F, 3 in., Cv 100	V5011A	
312497	Packing Nut, V5013A, 4 in. to 6 in.	V5013A	
312498/U	Packing, V5013A, 4 in. to 6 in.	V5013A	
313104/U	Disc, V5011, 1 in. NPT	V5011	
313338/U	Valve Stem, 1/2 in. to 1 1/4 in. NPT for V5013	V5013	
314539/U	Plug, V5011C, G, 3 in. NPT, Cv 100	V5011C	
32003941-001/U	Seat Removal Tool	V5011N; V5013N 1/2 in. through 1-1/4 in. sizes	
32003941-002/U	Seat Removal Tool	V5011N; V5013N for 1-1/2 in. through 2 in. sizes	

Globe Valve Replacement Parts

Material Number	Description	Used With
0901116A/U	Stem button for V5011N and V5013N valves	
14004625-001/U	Replacement Disc, V5011A, F, Cv 0.4 to 4.0	V5011A, F
14004625-003/U	Replacement Disc, V5011A, F, Cv 16	V5011A, F
14004625-004/U	Replacement Disc, V5011A, F, Cv 25	V5011A, F
14004625-005/U	Replacement Disc, V5011A, F, Cv 40	V5011A, F
14004625-006/U	Replacement Disc, V5011A, F, Cv 63	V5011A, F
14004625-007/U	Replacement Disc, V5011A, F, Cv 100	V5011A, F
14004625-012/U	Replacement Disc, V5011C, G, Cv 6.3 to 10	V5011C, G
14004625-013/U	Replacement Disc, V5011C, G, Cv 16	V5011C, G
14004625-014/U	Replacement Disc, V5011C, G, Cv 25	V5011C, G
14004625-015/U	Replacement Disc, V5011C, G, Cv 40	V5011C, G
14004625-016/U	Replacement Disc, V5011C, G, Cv 63	V5011C, G
14004625-017/U	Replacement Disc, V5011C, G, Cv 100	V5011C, G
311432/U	White Packing 3/8 inch I.D.	V5011G1111; V5011G1129
311746/U	Disc holder for 3 in. valves	V5011F1113; V5011G1129

VGF Packing Kits

Material Number	Description	Used With
R43176754002	Packing kit for 2 1/2" and 3" ANSI 125 VGF valves	VGF21, VGF31 up to 3"
R43176755004	Packing kit for 2 1/2" and 3" ANSI 250 and pressure-balanced VGF valves	VGF21EP/LP; VGF22; VGF32; up to 3"
R43176755005	Packing kit for 4" to 6" VGF valves	VGF2; VGF3; 4 to 6"

Globe Valve Rebuild Kit

Material Number	Description	Used With
0901748A/U	Rebuild kit for V5011N1024 including stem button, repack kit, packing cartridge, seat ring and plug assembly	V5011N
0901749A/U	Rebuild kit for V5011N1032 including stem button, repack kit, packing cartridge, seat ring and plug assembly	V5011N
0901750A/U	Rebuild kit for V5011N1040 including stem button, repack kit, packing cartridge, seat ring and plug assembly	V5011N
0901751A/U	Rebuild kit for V5011N1057 including stem button, repack kit, packing cartridge, seat ring and plug assembly	V5011N
0901752A/U	Rebuild kit for V5011N1065 including stem button, repack kit, packing cartridge, seat ring and plug assembly	V5011N
0901753A/U	Rebuild kit for V5011N1073 including stem button, repack kit, packing cartridge, seat ring and plug assembly	V5011N
0901754A/U	Rebuild kit for V5011N1081 including stem button, repack kit, packing cartridge, seat ring and plug assembly	V5011N
0901755A/U	Rebuild kit for V5011N1099 including stem button, repack kit, packing cartridge, seat ring and plug assembly	V5011N
0901759A/U	Rebuild kit for V5011N3004 and V5013N1030 including stem button, repack kit, packing cartridge, seat ring and plug assembly	V5011N
0901760A/U	Rebuild kit for V5011N3012 and V5013N1048 including stem button, repack kit, packing cartridge, seat ring and plug assembly	V5011N
0901761A/U	Rebuild kit for V5011N3020 and V5013N1055 including stem button, repack kit, packing cartridge, seat ring and plug assembly	V5011N
0901762A/U	Rebuild kit for V5011N3038 and V5013N1063 including stem button, repack kit, packing cartridge, seat ring and plug assembly	V5011N
0901763A/U	Rebuild kit for V5011N3046 and V5013N1071 including stem button, repack kit, packing cartridge, seat ring and plug assembly	V5011N
0901764A/U	Rebuild kit for V5013N1089 including stem button, repack kit, packing cartridge, seat ring and plug assembly	V5013N
0901765A/U	Rebuild kit for V5013N1097 including stem button, repack kit, packing cartridge, seat ring and plug assembly	V5013N
0901786A/U	Repack Kit for V5011N and V5013N 1/2 inch to 1-1/4 inch valves	V5011N
0901787A/U	Rebuild kit for V5011N and V5013N 1 1/2 to 2 inch valves	V5011N and V5013N
0903424A/U	Rebuild kit for V5011N2022 including stem button, repack kit, packing cartridge, seat ring and plug assembly	V5011N
0903425A/U	Rebuild kit for V5011N2030 including stem button, repack kit, packing cartridge, seat ring and plug assembly	V5011N
0903426A/U	Rebuild kit for V5011N2048 including stem button, repack kit, packing cartridge, seat ring and plug assembly	V5011N
0903427A/U	Rebuild kit for V5011N2055 including stem button, repack kit, packing cartridge, seat ring and plug assembly	V5011N
0903428A/U	Rebuild kit for V5011N2063 including stem button, repack kit, packing cartridge, seat ring and plug assembly	V5011N
0903429A/U	Rebuild kit for V5011N2071 including stem button, repack kit, packing cartridge, seat ring and plug assembly	V5011N
0903430A/U	Rebuild kit for V5011N2089 including stem button, repack kit, packing cartridge, seat ring and plug assembly	V5011N
0903431A/U	Rebuild kit for V5011N2097 including stem button, repack kit, packing cartridge, seat ring and plug assembly	V5011N
14002694-006/U	Valve Repack/Rebuild Kit, V5011A, F: 1/2 in., 3/4 in., 1 in., 4 Cv or less	V5011A, F
14002694-008/U	Valve Repack/Rebuild Kit, V5011C, G: 1/2 in., 3/4 in., 1 in., 4 Cv or less	V5011C, G
14002695-006/U	Valve Repack/Rebuild Kit, V5011A, F: 1/2 in., 3/4 in., 1 in., 6.3 Cv or 10 Cv	V5011A, F
14002695-008/U	Valve Repack/Rebuild Kit, V5011C, G: 1/2 in., 3/4 in., 1 in., 6.3 Cv or 10 Cv	V5011C, G
14003109-006/U	Valve Repack/Rebuild Kit, V5011A, F: 1 1/4 in.	V5011A, F
14003109-008/U	Valve Repack/Rebuild Kit, V5011C: 1 1/4 in.	V5011C
14003110-006/U	Valve Repack/Rebuild Kit, V5011A, F: 1 1/2 in., 2 in., 2 1/2 in.	V5011A, F
14003110-008/U	Valve Repack/Rebuild Kit, V5011C for 1 1/2 in.	V5011C
14003111-006/U	Valve Repack/Rebuild Kit, V5011A, F: 2 in., 2 1/2 in., 3 in.	V5011A, F
14003111-008/U	Valve Repack/Rebuild Kit, V5011A, F: 2 in., 2 1/2 in., 3 in.	V5011A, F
14003294-002/U	Valve Repack Kit, Steam or water application	V5013A, B, C
14003294-004/U	Valve Service Parts, V5011A, C, F, G, V5013A, F with 1/4 in. stem for water service	V5011A, C, F, G; V5013A, F
14003295-002/U	Valve Repack Kit, V5011A, C, F, G, V5013A, F with 3/8 in. stem for steam service	V5011A, C, F, G; V5013A, F
14003296-002/U	V5011A, B, V5013B, C with 1/2 in. stem for water or steam service	V5011A, B; V5013B, C

V5051A Single-Seated Cage Valves

Single-Seated Cage Valves control steam, air, liquids, or non-combustible gases in two-position, proportional, or floating control systems where tight shutoff is not required.

- Pressure balanced cage type construction.
- Low operating force allows fail safe operation with spring return actuator.
- Combines 1 3/8" bonnet with 1 1/2" stroke.
- Sizes range from 2-1/2 to 6 in. (DN65 to DN150).
- Spring-loaded Teflon V-ring packing.
- Requires Q5020C valve linkage with one rotary, direct coupled actuator, or Q5001D with Modutrol Motor.

Dimensions in inches (millimeters)

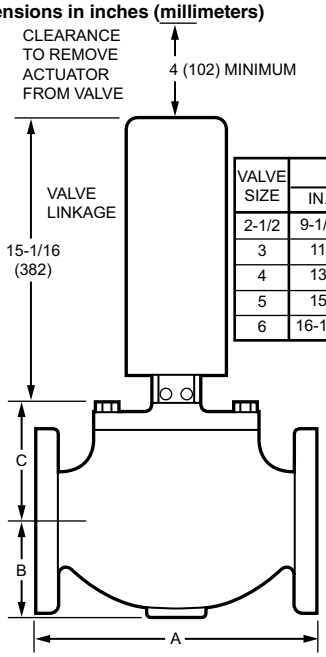

VALVE SIZE	A		B		C	
	IN.	MM	IN.	MM	IN.	MM
2-1/2	9-1/2	241	3-1/2	89	4-5/8	117
3	11	297	3-15/16	100	4-7/8	124
4	13	330	4-1/2	114	5-5/8	143
5	15	381	5-1/2	140	7-3/8	187
6	16-1/2	419	6-3/8	162	7-3/8	187

M27552

Valve Type: Cage Valves
Body Pattern: Two-way, Straight-through
Valve Action: Stem down to close
Connection Type: Flanged
Controlled Fluid: Chilled or hot water with up to 50% Glycol or Steam. Not for use with fuels.
Flow Characteristic: Modified Linear
Actuation: Must be purchased separately
Ambient Temperature Range: 35°F to 300°F (2°C to 150°C)
Maximum Differential Pressure Ratings (Close-off) (psi): 150 psi
Maximum Differential Pressure Ratings (Close-off) (kPa): 1034 kPa
Static Pressure Rating: Meets ANSI 125 Standard
ANSI/ASME Rating: 125
Stem Travel: 1 1/2 in. (38 mm)
Bonnet Size: 1 3/8 in. (35 mm)
Materials (Body): Cast Iron
Materials (Seat): Resilient
Materials (Stem): Stainless Steel
Materials (Packing): Teflon
Leakage: 0.01% of Cv, 0.03% of Cv @ 5 & 6 in.
Comments: Q5001D1000 requires 1-1/2 in. 220867A Cam.

Material Number	Pipe Size (inch)	Pipe Size (DN)	Capacity (Cv)	Capacity (Kv)	Maximum Safe Operating Pressure (psi)	Maximum Safe Operating Pressure (kPa)	Materials (Plug / Ball / Disc)	Used With
V5051A1024/U	4 in.	DN100	178 Cv	125 Kv	140 psi water; 55 psi steam	965 kPa water; 379 kPa steam	Bronze	Q5001D/Modutrol IV Motor, or Q5020C/DCA
V5051A3004/U	2 1/2 in.	DN65	75 Cv	64.5 Kv	150 psi water at 100°F; 55 psi steam	1034 kPa water at 38°C; 379 kPa steam	Stainless Steel	Q5001D/Modutrol IV Motor, or Q5020C/DCA
V5051A3012/U	3 in.	DN80	116 Cv	88 Kv	150 psi water at 100°F; 55 psi steam	1034 kPa water at 38°C; 379 kPa steam	Stainless Steel	Q5001D/Modutrol IV Motor, or Q5020C/DCA
V5051A3020/U	4 in.	DN100	178 Cv	125 Kv	150 psi water at 100°F; 55 psi steam	1034 kPa water at 38°C; 379 kPa steam	Stainless Steel	Q5001D/Modutrol IV Motor, or Q5020C/DCA
V5051A3038/U	5 in.	DN125	318 Cv	224 Kv	150 psi water at 100°F; 55 psi steam	1034 kPa water at 38°C; 379 kPa steam	Stainless Steel	Q5001D/Modutrol IV Motor, or Q5020C/DCA
V5051A3046/U	6 in.	DN150	390 Cv	224 Kv	150 psi water at 100°F; 55 psi steam	1034 kPa water at 38°C; 379 kPa steam	Stainless Steel	Q5001D/Modutrol IV Motor, or Q5020C/DCA

V5852; V5862 Two-way Cartridge Globe Valves

Two-way cartridge globe valves for control of hot and chilled water in VAV terminals, fan coil units, small re-heaters and re-coolers in temperature controllers. Use with M6410 and M7410 Actuators. 1/2" & 3/4" size fit with the M6435, M7435, and the MP958 Actuators.

- Long stroke allows wider range of control.
- Soft valve seat provides low leakage rate.
- Inserts for 1/2 in. and 3/4 in. valves are changeable without draining valve when used with an insert replacement tool.
- Brass body and Stainless Steel stem.
- Threaded plastic cover/manual handle allows manual operation.
- Easily installed in areas where space is limited.

Valve Type: Cartridge Globe Valve
Body Pattern: Two-way
Valve Action: V5852A and V5862 Series 2000-Stem down to close; V5862A Series 3000-Stem up to close
Connection Type: V5852A-Sweat (Female); V5862A-Female NPT
Controlled Fluid: Chilled or hot water with up to 50% Glycol. Not for use with steam or fuels.
Flow Characteristic: V5852A and V5862 Series 2000-Equal Percentage; V5862A Series 3000-Linear
Actuation: Must be purchased separately
Ambient Temperature Range: 36°F to 230°F (2°C to 110°C)
Maximum Safe Operating Pressure (psi): 235 psi
Maximum Safe Operating Pressure (kPa): 1620 kPa
Stem Travel: 1/4 in. (6.4 mm)
Materials (Body): Brass
Materials (Seat): Brass
Materials (Stem): Stainless Steel
Materials (Plug / Ball / Disc): Brass
Materials (Cartridge): Brass
Leakage: V5852A and V5862A 2000 Series-ANSI Class IV (0.01% of Cv maximum); V5862A 3000 Series-ANSI Class III (less than 0.02% of Cv)

Material Number	Pipe Size (inch)	Pipe Size (DN)	Capacity (Cv)	Capacity (Kv)	Maximum Differential Pressure Ratings (Close-off) (psi)	Maximum Differential Pressure Ratings (Close-off) (kPa)	Used With
V5852A2007	1/2 in.	DN15	0.19 Cv	0.16 Kv	232 psi	1600 kPa	M6410A1029; M7410F1000; M6435A1004; M7435F1001; MP958
V5852A2015	1/2 in.	DN15	0.29 Cv	0.25 Kv	232 psi	1600 kPa	M6410A1029; M6435A1004; M7410F1000; M7435F1001; MP958
V5852A2023	1/2 in.	DN15	0.47 Cv	0.41 Kv	232 psi	1600 kPa	M6410A1029; M7410F1000; M6435A1004; M7435F1001; MP958
V5852A2031	1/2 in.	DN15	0.7 Cv	0.6 Kv	232 psi	1600 kPa	M6410A1029; M6435A1004; M7410F1000; M7435F1001; MP958
V5852A2049	1/2 in.	DN15	1.2 Cv	1.0 Kv	174 psi	1200 kPa	M6410A1029; M7410F1000; M6435A1004; M7435F1001; MP958
V5852A2056	1/2 in.	DN15	1.9 Cv	1.6 Kv	174 psi	1200 kPa	M6410A1029; M6435A1004; M7410F1000; M7435F1001; MP958
V5852A2064	3/4 in.	DN20	2.9 Cv	2.5 Kv	58 psi	400 kPa	M6410A1029; M7410F1000; M6435A1004; M7435F1001; MP958
V5852A2072	3/4 in.	DN20	4.9 Cv	4.2 Kv	58 psi	400 kPa	M6410A1029; M6435A1004; M7410F1000; M7435F1001; MP958
V5862A2005	1/2 in.	DN15	0.19 Cv	0.16 Kv	232 psi	1600 kPa	M6410A1029; M6435A1004; M7410F1000; M7435F1001; MP958
V5862A2013	1/2 in.	DN15	0.29 Cv	0.25 Kv	232 psi	1600 kPa	M6410A1029; M7410F1000; M6435A1004; M7435F1001; MP958
V5862A2021	1/2 in.	DN15	0.47 Cv	0.41 Kv	232 psi	1600 kPa	M6410A1029; M6435A1004; M7410F1000; M7435F1001; MP958
V5862A2039	1/2 in.	DN15	0.74 Cv	0.64 Kv	232 psi	1600 kPa	M6410A1029; M7410F1000; M6435A1004; M7435F1001; MP958
V5862A2047	1/2 in.	DN15	1.2 Cv	1.0 Kv	174 psi	1200 kPa	M6410A1029; M6435A1004; M7410F1000; M7435F1001; MP958
V5862A2054	1/2 in.	DN15	1.9 Cv	1.6 Kv	174 psi	1200 kPa	M6410A1029; M7410F1000; M6435A1004; M7435F1001; MP958
V5862A2062	3/4 in.	DN20	2.9 Cv	2.5 Kv	58 psi	400 kPa	M6410A1029; M6435A1004; M7410F1000; M7435F1001; MP958
V5862A2070	3/4 in.	DN20	4.9 Cv	4.2 Kv	58 psi	400 kPa	M6410A1029; M7410F1000; M6435A1004; M7435F1001; MP958
V5862A3003	1 in.	DN25	5.5 Cv	4.8 Kv	232 psi	1600 kPa	M6410A3017; M7410F3006; M6435A3000; M7435F3007

Material Number	Pipe Size (inch)	Pipe Size (DN)	Capacity (Cv)	Capacity (Kv)	Maximum Differential Pressure Ratings (Close-off) (psi)	Maximum Differential Pressure Ratings (Close-off) (kPa)	Used With
V5862A3011	1 in.	DN25	7.8 Cv	6.7 Kv	232 psi	1600 kPa	M6410A3017; M7410F3006; M6435A3000; M7435F3007
V5862A3029	1 in.	DN25	11.0 Cv	9.5 Kv	232 psi	1600 kPa	M6410A3017; M7410F3006; M6435A3000; M7435F3007
V5862A3037	1 1/4 in.	DN32	18 Cv	15.6 Kv	174 psi	1200 kPa	M6410A3017; M7410F3006; M6435A3000; M7435F3007
V5862A3045	1 1/2 in.	DN40	25 Cv	21.6 Kv	145 psi	1000 kPa	M6410A3017; M7410F3006; M6435A3000; M7435F3007

Dimensions in inches (millimeters)

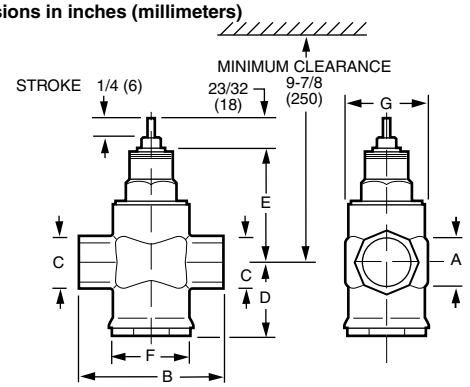

VALVE SIZE A (mm)	B	C	D	E	F	G
1 (25)	4-1/8 (105)	1-5/8 (41)	2-1/16 (53)	3-5/8 (92)	2 (50)	2-5/16 (58)
1-1/4 (32)	4-15/16 (125)	2 (50)	2-7/16 (62)	3-5/8 (92)	2-3/16 (55)	2-5/16 (58)
1-1/2 (38)	5-1/8 (130)	2-3/16 (55)	2-9/16 (65)	3-7/8 (98)	2-9/16 (65)	2-11/16 (69)

FLOW DIAGRAM
FOR 1, 1-1/4 AND 1-1/2 INCH VALVES

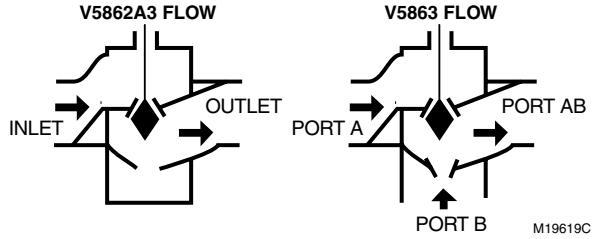

Dimensions in inches (millimeters)

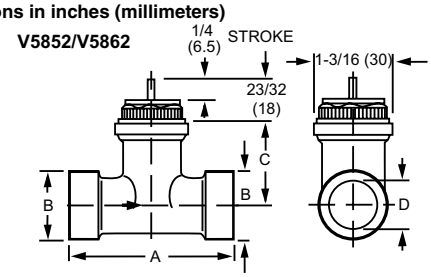

VALVE SIZE	A	B	C	D (NPT)	D (SWEAT)
1/2 (DN15)	3 (77)	3/4 (19)	1-5/16 (34)	1/2 (13)	5/8 (16)
3/4 (DN20)	3-1/2 (88)	1 (25)	1-1/4 (32)	3/4 (19)	7/8 (22)

NOTE: SOLDER ENDS CONFORM TO ANSI B16-18.

M18917

For 1/2 in. and 3/4 in. Valves

FLOW DIAGRAM
FOR 1/2 AND 3/4 INCH VALVES

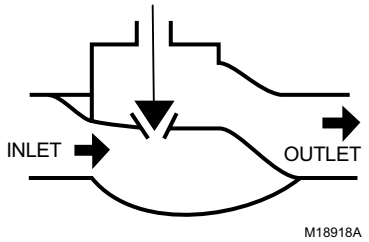

V5853; V5863 Three-way Cartridge Globe Valves

Three-way cartridge globe valves for control of hot and chilled water in VAV terminals, fan coil units, small re-heaters and re-coolers in temperature controllers.

- Long stroke allows wider range of control.
- Soft valve seat provides low leakage rate.
- Inserts for 1/2 in. and 3/4 in. valves are changeable without draining valve when used with an insert replacement tool.
- Brass body and stainless steel stem.
- Threaded plastic cover/manual handle allows manual operation.
- Easily installed in areas where space is limited.

Valve Type: Cartridge Globe Valve
Body Pattern: Three-way
Valve Action: V5853A and V5863 1000 and 2000 series-Stem up to close; V5863A 3000 Series-Stem up to close port A to AB
Connection Type: V5853A-Sweat (Female); V5863A-Female NPT
Controlled Fluid: Chilled or hot water with up to 50% Glycol. Not for use with steam or fuels.
Flow Characteristic: V5853A and V5863 1000 and 2000 series-Equal Percentage; V5863A 3000 Series-Linear
Actuation: Must be purchased separately
Ambient Temperature Range: 36°F to 230°F (2°C to 110°C)
Maximum Safe Operating Pressure (psi): 235 psi
Maximum Safe Operating Pressure (kPa): 1620 kPa
Stem Travel: 1/4 in. (6.4 mm)
Materials (Body): Brass
Materials (Seat): Brass
Materials (Stem): Stainless Steel
Materials (Plug / Ball / Disc): Brass
Materials (Cartridge): Brass
Leakage: V5853A and V5863 1000 and 2000 series-ANSI Class IV (0.01% of Cv maximum); V5863A 3000 Series-ANSI Class III (less than 0.02% of Cv)

Material Number	Pipe Size (inch)	Pipe Size (DN)	Capacity (Cv)	Capacity (Kv)	Maximum Differential Pressure Ratings (Close-off) (psi)	Maximum Differential Pressure Ratings (Close-off) (kPa)	Used With
V5853A1008	3/4 in.	DN20	2.9 Cv	2.5 Kv	34 psi	234 kPa	M6410A1029; M6435A1004; M7410F1000; M7435F1001
V5853A1016	3/4 in.	DN20	4.9 Cv	4.2 Kv	34 psi	234 kPa	M6410A1029; M6435A1004; M7410F1000; M7435F1001
V5853A2006	1/2 in.	DN15	0.29 Cv	0.25 Kv	116 psi	800 kPa	M6410A1029; M6435A1004; M7410F1000; M7435F1001; MP958
V5853A2014	1/2 in.	DN15	0.47 Cv	0.41 Kv	116 psi	800 kPa	M6410A1029; M6435A1004; M7410F1000; M7435F1001; MP958
V5853A2022	1/2 in.	DN15	0.74 Cv	0.64 Kv	36 psi	248 kPa	M6410A1029; M6435A1004; M7410F1000; M7435F1001; MP958
V5853A2030	1/2 in.	DN15	1.2 Cv	1.0 Kv	36 psi	248 kPa	M6410A1029; M6435A1004; M7410F1000; M7435F1001; MP958
V5853A2048	1/2 in.	DN15	1.9 Cv	1.6 Kv	34 psi	234 kPa	M6410A1029; M6435A1004; M7410F1000; M7435F1001; MP958
V5853A2055	3/4 in.	DN20	2.9 Cv	2.5 Kv	7.25 psi	50 kPa	M6410A1029; M6435A1004; M7410F1000; M7435F1001; MP958
V5853A2063	3/4 in.	DN20	4.9 Cv	4.2 Kv	7.25 psi	50 kPa	M6410A1029; M6435A1004; M7410F1000; M7435F1001; MP958
V5863A1006	3/4 in.	DN20	2.9 Cv	2.5 Kv	34 psi	234 kPa	M6410A1029; M6435A1004; M7410F1000; M7435F1001
V5863A1014	3/4 in.	DN20	4.9 Cv	4.2 Kv	34 psi	234 kPa	M6410A1029; M6435A1004; M7410F1000; M7435F1001
V5863A2004	1/2 in.	DN15	0.29 Cv	0.25 Kv	116 psi	800 kPa	M6410A1029; M6435A1004; M7410F1000; M7435F1001; MP958
V5863A2012	1/2 in.	DN15	0.47 Cv	0.41 Kv	116 psi	800 kPa	M6410A1029; M6435A1004; M7410F1000; M7435F1001; MP958
V5863A2020	1/2 in.	DN15	0.74 Cv	0.64 Kv	36 psi	248 kPa	M6410A1029; M6435A1004; M7410F1000; M7435F1001; MP958
V5863A2038	1/2 in.	DN15	1.2 Cv	1.0 Kv	36 psi	248 kPa	M6410A1029; M6435A1004; M7410F1000; M7435F1001; MP958
V5863A2046	1/2 in.	DN15	1.9 Cv	1.6 Kv	34 psi	234 kPa	M6410A1029; M6435A1004; M7410F1000; M7435F1001; MP958
V5863A2053	3/4 in.	DN20	2.9 Cv	2.5 Kv	7.25 psi	50 kPa	M6410A1029; M6435A1004; M7410F1000; M7435F1001; MP958
V5863A2061	3/4 in.	DN20	4.9 Cv	4.2 Kv	7.25 psi	50 kPa	M6410A1029; M6435A1004; M7410F1000; M7435F1001; MP958

Material Number	Pipe Size (inch)	Pipe Size (DN)	Capacity (Cv)	Capacity (Kv)	Maximum Differential Pressure Ratings (Close-off) (psi)	Maximum Differential Pressure Ratings (Close-off) (kPa)	Used With
V5863A3002	1 in.	DN25	5.5 Cv	4.8 Kv	232 psi	1600 kPa	M6410A3017; M7410F3006; M6435A3000; M7435F3007
V5863A3010	1 in.	DN25	7.8 Cv	6.7 Kv	232 psi	1600 kPa	M6410A3017; M7410F3006; M6435A3000; M7435F3007
V5863A3028	1 in.	DN25	11.0 Cv	9.5 Kv	232 psi	1600 kPa	M6410A3017; M7410F3006; M6435A3000; M7435F3007
V5863A3036	1 1/4 in.	DN32	18 Cv	15.6 Kv	174 psi	1200 kPa	M6410A3017; M7410F3006; M6435A3000; M7435F3007
V5863A3044	1 1/2 in.	DN40	25 Cv	21.6 Kv	145 psi	1000 kPa	M6410A3017; M7410F3006; M6435A3000; M7435F3007

Dimensions in inches (millimeters)

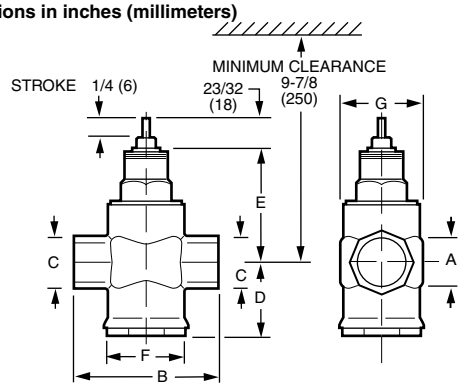

VALVE SIZE A (mm)	B	C	D	E	F	G
1 (25)	4-1/8 (105)	1-5/8 (41)	2-1/16 (53)	3-5/8 (92)	2 (50)	2-5/16 (58)
1-1/4 (32)	4-15/16 (125)	2 (50)	2-7/16 (62)	3-5/8 (92)	2-3/16 (55)	2-5/16 (58)
1-1/2 (38)	5-1/8 (130)	2-3/16 (55)	2-9/16 (65)	3-7/8 (98)	2-9/16 (65)	2-11/16 (69)

FLOW DIAGRAM
FOR 1, 1-1/4 AND 1-1/2 INCH VALVES

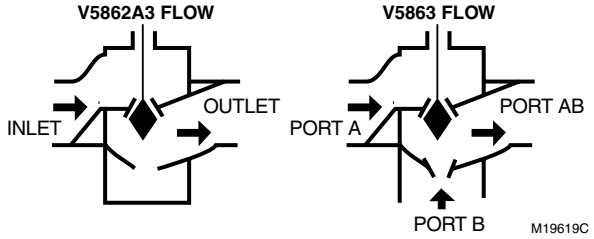

Dimensions in inches (millimeters)

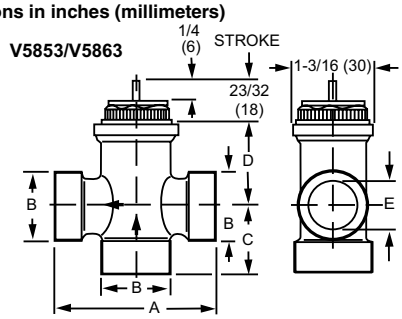

VALVE SIZE	A	B	C	D	E (NPT)	E (SWEAT)
1/2 (DN15)	3 (77)	3/4 (19)	1-5/16 (34)	1-5/16 (34)	1/2 (13)	5/8 (16)
3/4 (DN20)	3-1/2 (88)	1 (25)	1-1/2 (38)	1-1/4 (32)	3/4 (19)	7/8 (22)

NOTE: SOLDER ENDS CONFORM TO ANSI B16-18.

M18919

For 1/2 in. and 3/4 in. Valves

FLOW DIAGRAM
FOR 1/2 AND 3/4 INCH VALVES

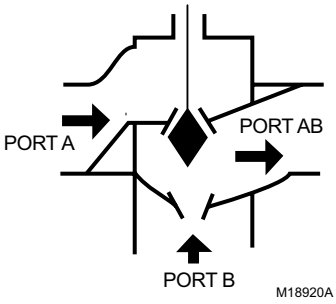

Cartridge Globe Valve Accessories

Material Number	Description	Used With
WV108B	Brush Tool for Valve Cleaning 1/2" and 3/4" V5852/V5853/V5862/V5863	V5862; V5853; V5852; V5863
WV108M	Insert Replacement Tool for 1/2" and 3/4" V5852/V5853/V5862/V5863	V5853; V5862; V5852; V5863

Cartridge Globe Valve Replacement Parts

Material Number	Description	Used With
0902807	Replacement Insert for 1/2" V5852/V5862, 1.9 Cv	V5852A2056; V5862A2054
0902808	Replacement Insert for 1/2" V5852/V5862, 1.2 Cv	V5852A2049; V5862A2047
0902809	Replacement Insert for 1/2" V5852/V5862, 0.74 Cv	V5852A2031; V5862A2039
0902810	Replacement Insert for 1/2" V5852/V5862, 0.47 Cv	V5852A2023; V5862A2021
0902811	Replacement Insert for 1/2" V5852/V5862, 0.29 Cv	V5852A2015; V5862A2013
0902812	Replacement Insert for 1/2" V5852/V5862, 0.19 Cv	V5852A2007; V5862A2005
0902814	Replacement Insert for 3/4" V5852/V5862, 2.9 Cv	V5852A2064; V5862A2062
0902815	Replacement Insert for 3/4" V5852/V5862, 4.9 Cv	V5852A2072; V5862A2070
0902822	Replacement Insert for 1/2" V5853/V5863, 0.47 Cv	V5853A2014; V5863A2012
0902823	Replacement Insert for 1/2" V5853/V5863, 0.74 Cv	V5853A2022; V5863A2020
0902824	Replacement Insert for 1/2" V5853/V5863, 1.2 Cv	V5853A2030; V5863A2038
0902825	Replacement Insert for 1/2" V5853/V5863, 1.9 Cv	V5853A2048; V5863A2046
0902827	Replacement Insert for 3/4" V5853/V5863, 4.9 Cv	V5853A1016; V5853A2063; V5863A1014; V5863A2061; V5853A2063; V5963A2061
0903827	Replacement Packing for 1 in. V5862/63	V5862A3037; V5863A3036
0903828	Replacement Packing for 1-1/4" V5862/63	V5862A3037; V5863A3036
0903829	Replacement Packing for 1-1/2" V5862/63	V5862A3045; V5863A3044

VCZA; VCZB Two-way Cartridge Cage Valves

Sweat Connection

NPT Connection

Inverted Flare Connection

Two-way cartridge cage valves control hot or chilled water with glycol solutions up to 60% in heating, ventilating and air conditioning (HVAC) systems. Used in hydronic applications in a normal indoor environment. Designed for zone control of heating/ cooling systems.

- Quick open, linear, and equal percentage flow characteristics available
- Bi-directional installation
- 3000-series valves for floating and modulating non-fail safe applications
- 1000-series valves for two-position control
- High close-off rating independent of Cv
- Available with a variety of North American and international pipe fittings
- No tools required for actuator installation or removal
- Actuator removal does not require draining system
- Service is by replacement of cartridge, not valve body
- Cartridge replacement rebuilds valve to factory-new condition

Valve Type: Cartridge Cage Valve
Body Pattern: Two-way, Straight-through
Valve Action: Stem up to close A port
Controlled Fluid: Chilled or hot water with up to 60% Glycol
Actuation: Must be purchased separately
Ambient Temperature Range: 32°F to 150°F (0°C to 65°C)
Fluid Temperature Range: 34°F to 203°F (1°C to 95°C)
Maximum Differential Pressure Ratings (Close-off) (psi): 60 psi
Maximum Differential Pressure Ratings (Close-off) (kPa): 414 kPa (4 bar)
Maximum Safe Operating Pressure (psi): 300 psi
Maximum Safe Operating Pressure (kPa): 2068 kPa (20 Bar)
Stem Travel: 0.4 in. (10 mm)
Materials (Body): Bronze
Materials (Seat): EPDM O-ring seals on Noryl piston
Materials (Stem): Stainless Steel
Materials (Packing): EPDM rubber
Materials (Cartridge): Ryton™, Noryl™ engineering plastic
Approvals, CSA: CSA Certified
Includes: Cartridge installation wrench

Accessories:
40007029-002/U – Wrench for cartridge (included with sweat valves and all replacement cartridges)

Dimensions in inches (millimeters)

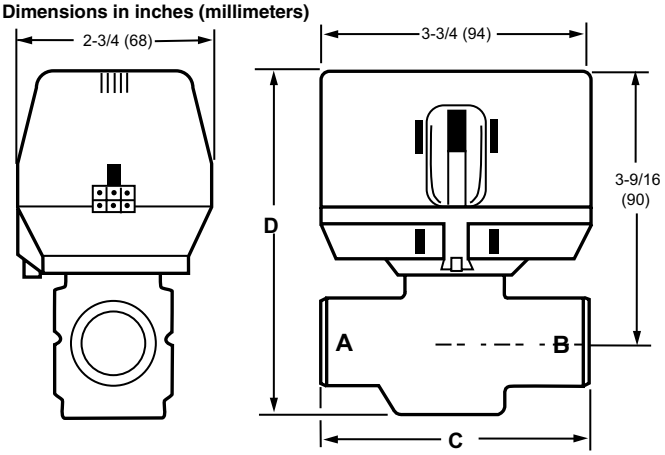

	C		D	
PIPE FITTING SIZES	**IN.**	**MM**	**IN.**	**MM**
3/8" FLARE ⚠1	3-7/8	98	4-3/8	111
1/2" SWEAT	3-1/2	89		
1/2" FLARE ⚠1	3-7/8	98		
1/2" INVERTED FLARE	⚠1			
1/2" NPT (int.)				
3/4" NPT (int.)	3-11/16	94	4-7/16	113
3/4" SWEAT				
1" NPT (int.)				
1" SWEAT				
1-1/4" SWEAT	4-5/16	110	4-5/8	118
1-1/4" NPT (int.)				

⚠1 NO ADAPTERS

M16839

Material Number	Pipe Size (inch)	Pipe Size (DN)	Capacity (Cv)	Capacity (Kv)	Flow Characteristic	Connection Type	Timing	Used With	Comments
VCZAA1100/U	1/2 in.	DN15	3.5 Cv	3.03 Kv	Linear	Sweat	When used with VC series Actuator – On/ Off models with 6 seconds	VC actuators, On-Off Type	Can be controlled by either a low or a line voltage SPDT or SPST or floating controller; Characterized cartridge
VCZAA3100/U	1/2 in.	DN15	3.5 Cv	3.03 Kv	Linear	Sweat	When used with VC series Actuator – 2 minutes	VC6830/VC6831/VC6834; VC6930/VC6931/VC6934; VC7930/VC7931/VC7934	For use with Non-fail Safe Floating and Modulating (Proportional) actuators; Characterized cartridge

Material Number	Pipe Size (inch)	Pipe Size (DN)	Capacity (Cv)	Capacity (Kv)	Flow Characteristic	Connection Type	Timing	Used With	Comments
VCZAA3400/U	1/2 in.	DN15	2.3 Cv	1.98 Kv	Modified Equal Percent	Sweat	When used with VC series Actuator – 2 minutes	VC6830/VC6831/VC6834; VC6930/VC6931/VC6934; VC7930/VC7931/VC7934	For use with Non-fail Safe Floating and Modulating (Proportional) actuators; Characterized cartridge
VCZAA3500/U	1/2 in.	DN15	0.7 Cv	0.6 Kv	Modified Equal Percent	Sweat	When used with VC series Actuator – 2 minutes	VC6830/VC6831/VC6834; VC6930/VC6931/VC6934; VC7930/VC7931/VC7934	For use with Non-fail Safe Floating and Modulating (Proportional) actuators; Characterized cartridge
VCZAA3800/U	1/2 in.	DN15	1.9 Cv	1.64 Kv	Modified Equal Percent	Sweat	When used with VC series Actuator – 2 minutes	VC6830/VC6831/VC6834; VC6930/VC6931/VC6934; VC7930/VC7931/VC7934	For use with Non-fail Safe Floating and Modulating (Proportional) actuators; Characterized cartridge
VCZAE1100/U	1/2 in.	DN15	3.2 Cv	2.74 Kv	Linear	Inverted Flare	When used with VC series Actuator – On/Off models with 6 seconds	VC actuators, On-Off Type	Can be controlled by either a low or a line voltage SPDT or SPST or floating controller; Characterized cartridge
VCZAL1100/U	3/4 in.	DN20	4.7 Cv	4.0 Kv	Linear	Female NPT	When used with VC series Actuator – On/Off models with 6 seconds	VC actuators, On-Off Type	Can be controlled by either a low or a line voltage SPDT or SPST or floating controller; Characterized cartridge
VCZAL3400/U	3/4 in.	DN20	3.9 Cv	3.4 Kv	Modified Equal Percent	Female NPT	When used with VC series Actuator – 2 minutes	VC6830/VC6831/VC6834; VC6930/VC6931/VC6934; VC7930/VC7931/VC7934	For use with Non-fail Safe Floating and Modulating (Proportional) actuators; Characterized cartridge
VCZAL3800/U	3/4 in.	DN20	3.1 Cv	2.6 Kv	Modified Equal Percent	Female NPT	When used with VC series Actuator – 2 minutes	VC6830/VC6831/VC6834; VC6930/VC6931/VC6934; VC7930/VC7931/VC7934	For use with Non-fail Safe Floating and Modulating (Proportional) actuators; Characterized cartridge
VCZAM1100/U	3/4 in.	DN20	4.6 Cv	3.9 Kv	Linear	Sweat	When used with VC series Actuator – On/Off models with 6 seconds	VC actuators, On-Off Type	Can be controlled by either a low or a line voltage SPDT or SPST or floating controller; Characterized cartridge
VCZAM3400/U	3/4 in.	DN20	3.9 Cv	3.4 Kv	Modified Equal Percent	Sweat	When used with VC series Actuator – 2 minutes	VC6830/VC6831/VC6834; VC6930/VC6931/VC6934; VC7930/VC7931/VC7934	For use with Non-fail Safe Floating and Modulating (Proportional) actuators; Characterized cartridge
VCZAM3800/U	3/4 in.	DN20	3.1 Cv	2.6 Kv	Modified Equal Percent	Sweat	When used with VC series Actuator – 2 minutes	VC6830/VC6831/VC6834; VC6930/VC6931/VC6934; VC7930/VC7931/VC7934	For use with Non-fail Safe Floating and Modulating (Proportional) actuators; Characterized cartridge
VCZAR1100/U	1 in.	DN25	6.6 Cv	5.7 Kv	Linear	Female NPT	When used with VC series Actuator – On/Off models with 6 seconds	VC actuators, On-Off Type	Can be controlled by either a low or a line voltage SPDT or SPST or floating controller; Characterized cartridge
VCZAR3100/U	1 in.	DN20	6.6 Cv	5.7 Kv	Linear	Female NPT	When used with VC series Actuator – 2 minutes	VC6830/VC6831/VC6834; VC6930/VC6931/VC6934; VC7930/VC7931/VC7934	For use with Non-fail Safe Floating and Modulating (Proportional) actuators; Characterized cartridge
VCZAS1100/U	1 in.	DN25	6.6 Cv	5.7 Kv	Linear	Sweat	When used with VC series Actuator – On/Off models with 6 seconds	VC actuators, On-Off Type	Can be controlled by either a low or a line voltage SPDT or SPST or floating controller; Characterized cartridge
VCZAS3100/U	1 in.	DN20	6.6 Cv	5.7 Kv	Linear	Sweat	When used with VC series Actuator – 2 minutes	VC6830/VC6831/VC6834; VC6930/VC6931/VC6934; VC7930/VC7931/VC7934	For use with Non-fail Safe Floating and Modulating (Proportional) actuators; Characterized cartridge
VCZAS3400/U	1 in.	DN20	4.2 Cv	3.6 Kv	Modified Equal Percent	Sweat	When used with VC series Actuator – 2 minutes	VC6830/VC6831/VC6834; VC6930/VC6931/VC6934; VC7930/VC7931/VC7934	For use with Non-fail Safe Floating and Modulating (Proportional) actuators; Characterized cartridge
VCZBB1100/U	1/2 in.	DN15	3.5 Cv	3.03 Kv	Linear	Female NPT	When used with VC series Actuator – On/Off models with 6 seconds	VC actuators, On-Off Type	Can be controlled by either a low or a line voltage SPDT or SPST or floating controller; Characterized cartridge
VCZBB3100/U	1/2 in.	DN15	3.5 Cv	3.03 Kv	Linear	Female NPT	When used with VC series Actuator – 2 minutes	VC6830/VC6831/VC6834; VC6930/VC6931/VC6934; VC7930/VC7931/VC7934	For use with Non-fail Safe Floating and Modulating (Proportional) actuators; Characterized cartridge

Material Number	Pipe Size (inch)	Pipe Size (DN)	Capacity (Cv)	Capacity (Kv)	Flow Characteristic	Connection Type	Timing	Used With	Comments
VCZBB3400/U	1/2 in.	DN15	2.3 Cv	1.98 Kv	Modified Equal Percent	Female NPT	When used with VC series Actuator – 2 minutes	VC6830/VC6831/VC6834; VC6930/VC6931/VC6934; VC7930/VC7931/VC7934	For use with Non-fail Safe Floating and Modulating (Proportional) actuators; Characterized cartridge
VCZBB3500/U	1/2 in.	DN15	0.7 Cv	0.6 Kv	Modified Equal Percent	Female NPT	When used with VC series Actuator – 2 minutes	VC6830/VC6831/VC6834; VC6930/VC6931/VC6934; VC7930/VC7931/VC7934	For use with Non-fail Safe Floating and Modulating (Proportional) actuators; Characterized cartridge
VCZBB3600/U	1/2 in.	DN15	1.3 Cv	1.1 Kv	Modified Equal Percent	Female NPT	When used with VC series Actuator – 2 minutes	VC6830/VC6831/VC6834; VC6930/VC6931/VC6934; VC7930/VC7931/VC7934	For use with Non-fail Safe Floating and Modulating (Proportional) actuators; Characterized cartridge
VCZBB3800/U	1/2 in.	DN15	1.9 Cv	1.64 Kv	Modified Equal Percent	Female NPT	When used with VC series Actuator – 2 minutes	VC6830/VC6831/VC6834; VC6930/VC6931/VC6934; VC7930/VC7931/VC7934	For use with Non-fail Safe Floating and Modulating (Proportional) actuators; Characterized cartridge
VCZBD1100/U	1 1/4 in.	DN32	7.0 Cv	6.5 Kv	Linear	Female NPT	When used with VC series Actuator – On/Off models with 6 seconds	VC actuators, On-Off Type	Can be controlled by either a low or a line voltage SPDT or SPST or floating controller; Characterized cartridge
VCZBD3100/U	1 1/4 in.	DN32	7.0 Cv	6.5 Kv	Linear	Female NPT	When used with VC series Actuator – 2 minutes	VC6830/VC6831/VC6834; VC6930/VC6931/VC6934; VC7930/VC7931/VC7934	For use with Non-fail Safe Floating and Modulating (Proportional) actuators; Characterized cartridge
VCZBE1100/U	1 1/4 in.	DN32	7.0 Cv	6.5 Kv	Linear	Sweat	When used with VC series Actuator – On/Off models with 6 seconds	VC actuators, On-Off Type	Can be controlled by either a low or a line voltage SPDT or SPST or floating controller; Characterized cartridge
VCZBE3100/U	1 1/4 in.	DN32	7.0 Cv	6.5 Kv	Linear	Sweat	When used with VC series Actuator – 2 minutes	VC6830/VC6831/VC6834; VC6930/VC6931/VC6934; VC7930/VC7931/VC7934	For use with Non-fail Safe Floating and Modulating (Proportional) actuators; Characterized cartridge

VCZM; VCZN Three-way Cartridge Cage Valves

Sweat Connection

Flare Connection

Threaded Connection

Three-way cartridge cage valves control hot or chilled water with glycol solutions up to 60% in heating, ventilating and air conditioning (HVAC) systems. Used in hydronic applications in a normal indoor environment. Designed for zone control of heating/ cooling systems.

- Quick open and linear flow characteristics available
- Mixing or diverting application
- A-AB-B body pattern
- 7000-series valves for floating and modulating non-fail safe applications
- 6000-series valves for two-position control
- High close-off rating independent of Cv
- Available with a variety of North American and international pipe fittings
- No tools required for actuator installation or removal
- Actuator removal does not require draining system
- Service is by replacement of cartridge, not valve body
- Cartridge replacement rebuilds valve to factory-new condition

Valve Type: Cartridge Cage Valve
Body Pattern: Three-way A-AB-B
Valve Action: Stem up to close A port
Controlled Fluid: Chilled or hot water with up to 60% Glycol
Actuation: Must be purchased separately
Ambient Temperature Range: 32°F to 150°F (0°C to 65°C)
Fluid Temperature Range: 34°F to 203°F (1°C to 95°C)
Maximum Differential Pressure Ratings (Close-off) (psi): 60 psi
Maximum Differential Pressure Ratings (Close-off) (kPa): 414 kPa (4 bar)
Maximum Safe Operating Pressure (psi): 300 psi
Maximum Safe Operating Pressure (kPa): 2068 kPa (20 Bar)
Stem Travel: 0.4 in. (10 mm)
Materials (Body): Bronze
Materials (Seat): EPDM O-ring seals on Noryl piston
Materials (Stem): Stainless Steel
Materials (Packing): EPDM rubber
Materials (Cartridge): Ryton™, Noryl™ engineering plastic
Approvals, CSA: CSA Certified

Accessories:
40007029-002/U – Wrench for cartridge (included with sweat valves and all replacement cartridges)

Dimensions in inches (millimeters)

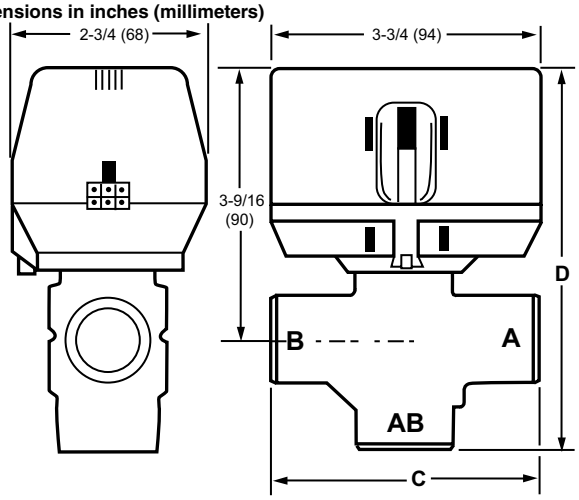

	C		D	
PIPE FITTING SIZES	IN.	MM	IN.	MM
3/8" FLARE ⚠1	3-7/8	98	5-11/32	136
1/2" SWEAT	3-1/2	89	5-1/8	130
1/2" FLARE ⚠1	3-7/8	98	5-11/32	136
1/2" INVERTED FLARE ⚠1				
1/2" NPT (int.)				
3/4" NPT (int.)	3-11/16	94	5-1/8	130
3/4" SWEAT			5-3/16	132
1" NPT (int.)				136
1" SWEAT			5-11/32	
1-1/4" SWEAT	4-5/16	110	5-5/8	142
1-1/4" NPT (int.)				

⚠1 NO ADAPTERS

M16840

Material Number	Pipe Size (inch)	Pipe Size (DN)	Capacity (Cv)	Capacity (Kv)	Flow Characteristic	Connection Type	Timing	Includes	Used With	Comments
VCZMA6100/U	1/2 in.	DN15	3.7 Cv	3.2 Kv	Linear	Sweat	When used with VC series Actuator – On/Off models with 6 seconds	Cartridge changing tool	VC actuators, 2-position, On-Off Type	Can be controlled by either a low or a line voltage SPDT or SPST or floating controller; Characterized cartridge

Material Number	Pipe Size (inch)	Pipe Size (DN)	Capacity (Cv)	Capacity (Kv)	Flow Characteristic	Connection Type	Timing	Includes	Used With	Comments
VCZMA7100/U	1/2 in.	DN15	3.7 Cv	3.2 Kv	Linear	Sweat	When used with VC series Actuator – 2 minutes	Cartridge changing tool	VC6830/ VC6831/ VC6834; VC6930/ VC6931/ VC6934; VC7930/ VC7931/VC7934	Use with Non-fail Safe floating and modulating (Proportional) actuators; Characterized cartridge
VCZMA7800/U	1/2 in.	DN15	1.5 Cv	1.3 Kv	Modified Equal Percent	Sweat	When used with VC series Actuator – 2 minutes	Cartridge changing tool	VC6830/ VC6831/ VC6834; VC6930/ VC6931/ VC6934; VC7930/ VC7931/VC7934	Use with Non-fail Safe floating and modulating (Proportional) actuators; Characterized cartridge
VCZMD6100/U	1/2 in.	DN15	3.2 Cv	2.74 Kv	Linear	Inverted Flare	When used with VC series Actuator – On/Off models with 6 seconds		VC actuators, 2-position, On-Off Type	Can be controlled by either a low or a line voltage SPDT or SPST or floating controller; Characterized cartridge
VCZMK6100/U	3/4 in.	DN20	6.6 Cv	5.7 Kv	Linear	Female NPT	When used with VC series Actuator – On/Off models with 6 seconds		VC actuators, 2-position, On-Off Type	Can be controlled by either a low or a line voltage SPDT or SPST or floating controller; Characterized cartridge
VCZMK7400/U	3/4 in.	DN20	4.2 Cv	3.6 Kv	Modified Equal Percent	Female NPT	When used with VC series Actuator – 2 minutes		VC6830/ VC6831/ VC6834; VC6930/ VC6931/ VC6934; VC7930/ VC7931/VC7934	Use with Non-fail Safe floating and modulating (Proportional) actuators; Characterized cartridge
VCZML6100/U	3/4 in.	DN20	6.6 Cv	5.7 Kv	Linear	Sweat	When used with VC series Actuator – On/Off models with 6 seconds	Cartridge changing tool	VC actuators, 2-position, On-Off Type	Can be controlled by either a low or a line voltage SPDT or SPST or floating controller; Characterized cartridge
VCZML7100/U	3/4 in.	DN20	6.6 Cv	5.7 Kv	Linear	Sweat	When used with VC series Actuator – 2 minutes	Cartridge changing tool	VC6830/ VC6831/ VC6834; VC6930/ VC6931/ VC6934; VC7930/ VC7931/VC7934	Use with Non-fail Safe floating and modulating (Proportional) actuators; Characterized cartridge
VCZML7400/U	3/4 in.	DN20	4.2 Cv	3.6 Kv	Modified Equal Percent	Sweat	When used with VC series Actuator – 2 minutes	Cartridge changing tool	VC6830/ VC6831/ VC6834; VC6930/ VC6931/ VC6934; VC7930/ VC7931/VC7934	Use with Non-fail Safe floating and modulating (Proportional) actuators; Characterized cartridge
VCZML7800/U	3/4 in.	DN20	3.2 Cv	2.7 Kv	Modified Equal Percent	Sweat	When used with VC series Actuator – 2 minutes	Cartridge changing tool	VC6830/ VC6831/ VC6834; VC6930/ VC6931/ VC6934; VC7930/ VC7931/VC7934	Use with Non-fail Safe floating and modulating (Proportional) actuators; Characterized cartridge
VCZMR6100/U	1 in.	DN25	8.3 Cv	7.1 Kv	Linear	Female NPT	When used with VC series Actuator – On/Off models with 6 seconds		VC actuators, 2-position, On-Off Type	Can be controlled by either a low or a line voltage SPDT or SPST or floating controller; Characterized cartridge
VCZMS6100/U	1 in.	DN25	8.3 Cv	7.1 Kv	Linear	Sweat	When used with VC series Actuator – On/Off models with 6 seconds	Cartridge changing tool	VC actuators, 2-position, On-Off Type	Can be controlled by either a low or a line voltage SPDT or SPST or floating controller; Characterized cartridge

Cartridge Cage Valves

Material Number	Pipe Size (inch)	Pipe Size (DN)	Capacity (Cv)	Capacity (Kv)	Flow Characteristic	Connection Type	Timing	Includes	Used With	Comments
VCZMS7100/U	1 in.	DN25	8.3 Cv	7.1 Kv	Linear	Sweat	When used with VC series Actuator – 2 minutes	Cartridge changing tool	VC6830/ VC6831/ VC6834; VC6930/ VC6931/ VC6934; VC7930/ VC7931/VC7934	Use with Non-fail Safe floating and modulating (Proportional) actuators; Characterized cartridge
VCZNB6100/U	1/2 in.	DN15	3.7 Cv	3.2 Kv	Linear	Female NPT	When used with VC series Actuator – On/Off models with 6 seconds		VC actuators, 2-position, On-Off Type	Can be controlled by either a low or a line voltage SPDT or SPST or floating controller; Characterized cartridge
VCZNB7100/U	1/2 in.	DN15	3.7 Cv	3.2 Kv	Linear	Female NPT	When used with VC series Actuator – 2 minutes		VC6830/ VC6831/ VC6834; VC6930/ VC6931/ VC6934; VC7930/ VC7931/VC7934	Use with Non-fail Safe floating and modulating (Proportional) actuators; Characterized cartridge
VCZNB7400/U	1/2 in.	DN15	2.7 Cv	2.3 Kv	Modified Equal Percent	Female NPT	When used with VC series Actuator – 2 minutes		VC6830/ VC6831/ VC6834; VC6930/ VC6931/ VC6934; VC7930/ VC7931/VC7934	Use with Non-fail Safe floating and modulating (Proportional) actuators; Characterized cartridge
VCZNB7600/U	1/2 in.	DN15	1.5 Cv	1.3 Kv	Modified Equal Percent	Female NPT	When used with VC series Actuator – 2 minutes		VC6830/ VC6831/ VC6834; VC6930/ VC6931/ VC6934; VC7930/ VC7931/VC7934	Use with Non-fail Safe floating and modulating (Proportional) actuators; Characterized cartridge
VCZNB7800/U	1 in.	DN25	1.5 Cv	1.3 Kv	Modified Equal Percent	Female NPT	When used with VC series Actuator – 2 minutes		VC6830/ VC6831/ VC6834; VC6930/ VC6931/ VC6934; VC7930/ VC7931/VC7934	Use with Non-fail Safe floating and modulating (Proportional) actuators; Characterized cartridge
VCZND6100/U	1 1/4 in.	DN32	9.0 Cv	7.7 Kv	Linear	Female NPT	When used with VC series Actuator – On/Off models with 6 seconds		VC actuators, 2-position, On-Off Type	Can be controlled by either a low or a line voltage SPDT or SPST or floating controller; Characterized cartridge
VCZND7100/U	1 1/4 in.	DN32	9.0 Cv	7.7 Kv	Linear	Female NPT	When used with VC series Actuator – 2 minutes		VC6830/ VC6831/ VC6834; VC6930/ VC6931/ VC6934; VC7930/ VC7931/VC7934	Use with Non-fail Safe floating and modulating (Proportional) actuators; Characterized cartridge
VCZNE6100/U	1 1/4 in.	DN32	9.0 Cv	7.7 Kv	Linear	Sweat	When used with VC series Actuator – On/Off models with 6 seconds	Cartridge changing tool	VC actuators, 2-position, On-Off Type	Can be controlled by either a low or a line voltage SPDT or SPST or floating controller; Characterized cartridge

VC Series Valve and Fail-Safe Actuator Assemblies (Two-way Valves)

The Fail-Safe VC6936 Floating and VC7936 Modulating Control valves provide proportional control of hot or chilled water in commercial heating and cooling applications, such as unit ventilators. On a power failure, this patented actuator design drives the valve to the fail safe position, either fully open or closed according to the installer's wiring connections.

These actuators use a microprocessor-controlled, low voltage stepper motor with a super capacitor-based power supply capable of storing enough power to drive the valve to it when 24V power is removed from the actuator.

A VC hydronic valve consists of a valve body, a replaceable characterized cartridge assembly and a Honeywell VC6900 or VC7900-series actuator, providing proportional flow control. Three-way bodies may be used in either diverting or mixing applications. VC valves use cam-operated cartridge travel to resist water hammer. Limit switches prevent motor overrun. For best control, outdoor temperature compensation of supply water temperature is recommended.

Valve Type: Cartridge Cage Valve
Body Pattern: Two-way, Straight-through
Valve Action: Stem up to close A port
Controlled Fluid: Chilled or hot water with up to 60% Glycol
Actuation: VC6936-Floating (24V SP3T) fail-safe; VC7936-Modulating/Floating/PWM fail-safe
Ambient Temperature Range: 32°F to 150°F (0°C to 65°C)
Fluid Temperature Range: 34°F to 203°F (1°C to 95°C)
Maximum Differential Pressure Ratings (Close-off) (psi): 60 psi
Maximum Differential Pressure Ratings (Close-off) (kPa): 414 kPa (4 bar)
Maximum Safe Operating Pressure (psi): 300 psi
Maximum Safe Operating Pressure (kPa): 2068 kPa (20 Bar)
Stem Travel: 0.4 in. (10 mm)
Materials (Body): Bronze
Materials (Seat): EPDM O-ring seals on Noryl piston
Materials (Stem): Stainless Steel
Materials (Packing): EPDM rubber
Materials (Cartridge): Ryton™, Noryl™ engineering plastic
Approvals, CSA: CSA Certified
Comments: Use with non-fail safe floating and modulating actuators; Characterized cartridge

Material Number	Pipe Size (inch)	Pipe Size (DN)	Capacity (Cv)	Capacity (Kv)	Flow Characteristic	Connection Type	Timing	Includes
VC6936AA1400/U	1/2 in.	DN15	2.3 Cv	1.98 Kv	Modified Equal Percent	Sweat	2 minutes	Cartridge changing tool
VC6936AA1500/U	1/2 in.	DN15	0.7 Cv	0.6 Kv	Modified Equal Percent	Sweat	2 minutes	Cartridge changing tool
VC6936AA1600/U	1/2 in.	DN15	1.3 Cv	1.1 Kv	Modified Equal Percent	Sweat	2 minutes	Cartridge changing tool
VC6936AM1400/U	3/4 in.	DN20	3.9 Cv	3.4 Kv	Modified Equal Percent	Sweat	2 minutes	Cartridge changing tool
VC6936AM1800/U	3/4 in.	DN20	3.1 Cv	2.6 Kv	Modified Equal Percent	Sweat	2 minutes	Cartridge changing tool
VC6936AR1100/U	1 in.	DN20	6.6 Cv	5.7 Kv	Linear	Female NPT	2 minutes	
VC6936AR1400/U	1 in.	DN20	4.2 Cv	3.6 Kv	Modified Equal Percent	Female NPT	2 minutes	
VC6936AS1400/U	1 in.	DN20	4.2 Cv	3.6 Kv	Modified Equal Percent	Sweat	2 minutes	Cartridge changing tool
VC6936BB1100/U	1/2 in.	DN15	3.5 Cv	3.1 Kv	Linear	Female NPT	2 minutes	
VC6936BB1400/U	1/2 in.	DN15	2.3 Cv	1.98 Kv	Modified Equal Percent	Female NPT	2 minutes	
VC7936AA1100/U	1/2 in.	DN15	3.5 Cv	3.1 Kv	Linear	Sweat	Installer-selectable 60 or 120 seconds	Cartridge changing tool
VC7936AA1500/U	1/2 in.	DN15	0.7 Cv	0.6 Kv	Modified Equal Percent	Sweat	Installer-selectable 60 or 120 seconds	Cartridge changing tool
VC7936AA1600/U	1/2 in.	DN15	1.3 Cv	1.1 Kv	Modified Equal Percent	Sweat	Installer-selectable 60 or 120 seconds	Cartridge changing tool
VC7936AA1800/U	1/2 in.	DN15	1.9 Cv	1.6 Kv	Modified Equal Percent	Sweat	Installer-selectable 60 or 120 seconds	Cartridge changing tool
VC7936AM1100/U	3/4 in.	DN20	4.7 Cv	4.1 Kv	Linear	Sweat	Installer-selectable 60 or 120 seconds	Cartridge changing tool
VC7936AM1800/U	3/4 in.	DN20	3.1 Cv	2.6 Kv	Modified Equal Percent	Sweat	Installer-selectable 60 or 120 seconds	Cartridge changing tool
VC7936BB1400/U	1/2 in.	DN15	2.3 Cv	1.98 Kv	Modified Equal Percent	Female NPT	Installer-selectable 60 or 120 seconds	
VC7936BB1500/U	1/2 in.	DN15	0.7 Cv	0.6 Kv	Modified Equal Percent	Female NPT	Installer-selectable 60 or 120 seconds	
VC7936BB1600/U	1/2 in.	DN15	1.3 Cv	1.1 Kv	Modified Equal Percent	Female NPT	Installer-selectable 60 or 120 seconds	
VC7936BD1100/U	1 1/4 in.	DN32	7 Cv	6.0 Kv	Linear	Female NPT	Installer-selectable 60 or 120 seconds	

VC Series Valve and Fail-Safe Actuator Assemblies (Three-way Valves)

The Fail-Safe VC6936 Floating and VC7936 Modulating Control valves provide proportional control of hot or chilled water in commercial heating and cooling applications, such as unit ventilators. On a power failure, this patented actuator design drives the valve to the fail safe position, either fully open or closed according to the installer's wiring connections.

These actuators use a microprocessor-controlled, low voltage stepper motor with a super capacitor-based power supply capable of storing enough power to drive the valve to it when 24V power is removed from the actuator.

A VC hydronic valve consists of a valve body, a replaceable characterized cartridge assembly and a Honeywell VC6900 or VC7900-series actuator, providing proportional flow control. Three-way bodies may be used in either diverting or mixing applications. VC valves use cam-operated cartridge travel to resist water hammer. Limit switches prevent motor overrun. For best control, outdoor temperature compensation of supply water temperature is recommended.

Valve Type: Cartridge Cage Valve
Body Pattern: Three-way A-AB-B
Valve Action: Stem up to close A port
Controlled Fluid: Chilled or hot water with up to 60% Glycol
Actuation: VC6936-Floating (24V SP3T) fail-safe; VC7936-Modulating/Floating/PWM fail-safe
Ambient Temperature Range: 32°F to 150°F (0°C to 65°C)
Fluid Temperature Range: 34°F to 203°F (1°C to 95°C)
Maximum Differential Pressure Ratings (Close-off) (psi): 60 psi
Maximum Differential Pressure Ratings (Close-off) (kPa): 414 kPa (4 bar)
Maximum Safe Operating Pressure (psi): 300 psi
Maximum Safe Operating Pressure (kPa): 2068 kPa (20 Bar)
Stem Travel: 0.4 in. (10 mm)
Materials (Body): Bronze
Materials (Seat): EPDM O-ring seals on Noryl piston
Materials (Stem): Stainless Steel
Materials (Packing): EPDM rubber
Materials (Cartridge): Ryton™, Noryl™ engineering plastic
Approvals, CSA: CSA Certified

Material Number	Pipe Size (inch)	Pipe Size (DN)	Capacity (Cv)	Capacity (Kv)	Flow Characteristic	Connection Type	Timing	Comments	Includes
VC6936MA6100/U	1/2 in.	DN15	3.7 Cv	3.2 Kv	Linear	Sweat	2 minutes	Use with non-fail safe floating and modulating actuators; Characterized cartridge	Cartridge changing tool
VC6936MA6500/U	1/2 in.	DN15	0.7 Cv	0.6 Kv	Modified Equal Percent	Sweat	2 minutes	Use with non-fail safe floating and modulating actuators; Characterized cartridge	Cartridge changing tool
VC6936MA6600/U	1/2 in.	DN15	1.5 Cv	1.3 Kv	Modified Equal Percent	Sweat	2 minutes	Use with non-fail safe floating and modulating actuators; Characterized cartridge	Cartridge changing tool
VC6936MK6800/U	3/4 in.	DN20	3.2 Cv	2.7 Kv	Modified Equal Percent	Female NPT	2 minutes	Use with non-fail safe floating and modulating actuators; Characterized cartridge	
VC6936ML6100/U	3/4 in.	DN20	6.6 Cv	5.7 Kv	Linear	Sweat	2 minutes	Use with non-fail safe floating and modulating actuators; Characterized cartridge	Cartridge changing tool
VC6936ML6400/U	3/4 in.	DN20	4.2 Cv	3.6 Kv	Modified Equal Percent	Sweat	2 minutes	Use with non-fail safe floating and modulating actuators; Characterized cartridge	Cartridge changing tool
VC6936ML6800/U	3/4 in.	DN20	3.2 Cv	2.7 Kv	Modified Equal Percent	Sweat	2 minutes	Use with non-fail safe floating and modulating actuators; Characterized cartridge	Cartridge changing tool
VC6936MS6100/U	1 in.	DN25	8.3 Cv	7.2 Kv	Linear	Sweat	2 minutes	Can be controlled by either a low or a line voltage SPDT or SPST or floating controller; Characterized cartridge	Cartridge changing tool
VC6936NB6100/U	1/2 in.	DN15	3.7 Cv	3.2 Kv	Linear	Female NPT	2 minutes	Use with non-fail safe floating and modulating actuators; Characterized cartridge	
VC6936NB6400/U	1/2 in.	DN15	2.7 Cv	2.3 Kv	Modified Equal Percent	Female NPT	2 minutes	Use with non-fail safe floating and modulating actuators; Characterized cartridge	
VC6936NB6500/U	1/2 in.	DN15	0.7 Cv	0.6 Kv	Modified Equal Percent	Female NPT	2 minutes	Use with non-fail safe floating and modulating actuators; Characterized cartridge	
VC6936NB6600/U	1/2 in.	DN15	1.5 Cv	1.3 Kv	Modified Equal Percent	Female NPT	2 minutes	Use with non-fail safe floating and modulating actuators; Characterized cartridge	
VC6936NE6100/U	1 1/4 in.	DN32	9 Cv	7.8 Kv	Linear	Sweat	2 minutes	Use with non-fail safe floating and modulating actuators; Characterized cartridge	Cartridge changing tool
VC7936ML6400/U	3/4 in.	DN20	4.2 Cv	3.6 Kv	Modified Equal Percent	Sweat	Installer-selectable 60 or 120 seconds	Use with non-fail safe floating and modulating actuators; Characterized cartridge	Cartridge changing tool
VC7936ML6800/U	3/4 in.	DN20	3.2 Cv	2.7 Kv	Modified Equal Percent	Sweat	Installer-selectable 60 or 120 seconds	Use with non-fail safe floating and modulating actuators; Characterized cartridge	Cartridge changing tool
VC7936MS6100/U	1 in.	DN25	8.3 Cv	7.2 Kv	Linear	Sweat	Installer-selectable 60 or 120 seconds	Can be controlled by either a low or a line voltage SPDT or SPST or floating controller; Characterized cartridge	Cartridge changing tool
VC7936NE6100/U	1 1/4 in.	DN32	9 Cv	7.8 Kv	Linear	Sweat	Installer-selectable 60 or 120 seconds	Use with non-fail safe floating and modulating actuators; Characterized cartridge	Cartridge changing tool

Cartridge Cage Valve Accessories

Material Number	Description
40007029-002/U	Wrench for cartridge (included with sweat valves and all replacement cartridges)

VCZZ Valve Replacement Cartridges

Material Number	Description	
VCZZ1000/U	Replacement cartridge, silver spring, for VC series 2-way valves, with quick open flow for use w/ 2-position or fail safe proportional actuators. Includes cartridge wrench.	
VCZZ1100/U	Replacement cartridge, silver spring, for VC series 2-way valves, with Linear flow for use w/ 2-position or fail safe proportional actuators. Includes cartridge wrench.	
VCZZ1400/U	Replacement cartridge, silver spring, for VC series 2-way valves, with Equal Percentage flow for use with fail safe proportional actuators. Includes cartridge wrench.	
VCZZ1500/U	Replacement cartridge, silver spring, for VC series 2-way valves, with Equal Percentage Extra Low flow for use with fail safe proportional actuators. Includes cartridge wrench.	
VCZZ1600/U	Replacement cartridge, silver spring, for VC series 2-way valves, with Equal Percentage Low flow for use with fail safe proportional actuators. Includes cartridge wrench.	
VCZZ3100/U	Replacement cartridge, red spring, for VC series with Linear flow for proportional control (non-fail safe). Includes cartridge wrench.	
VCZZ3400/U	Replacement cartridge, red spring, for VC series with Equal Percentage flow for proportional control (non-fail safe). Includes cartridge wrench.	
VCZZ3500/U	Replacement cartridge, red spring, for VC series with Equal Percentage Extra Low flow for proportional control (non-fail safe). Includes cartridge wrench.	
VCZZ3600/U	Replacement cartridge, red spring, for VC series with Equal Percentage Low flow for proportional control (non-fail safe). Includes cartridge wrench.	
VCZZ3800/U	Replacement cartridge, red spring, for VC series with Equal Percentage flow for proportional control (non-fail safe). Includes cartridge wrench.	
VCZZ6000/U	Replacement cartridge, silver spring, for VC series 3-way valves, with quick open flow, for use w/ 2-position actuators. Includes cartridge wrench.	
VCZZ6100/U	Replacement cartridge, silver spring, for VC series 3-way valves, with Linear flow, for use w/2-position or fail safe proportional actuators. Includes cartridge wrench.	
VCZZ6400/U	Replacement cartridge, silver spring, for VC series 3-way valves, with Equal Percentage flow, for use w/fail safe proportional actuators. Includes cartridge wrench.	
VCZZ6600/U	Replacement cartridge, silver spring, for VC series 3-way valves, with Equal Percentage Low flow, for use w/ fail safe proportional actuators. Includes cartridge wrench.	
VCZZ7100/U	Replacement cartridge, red spring, for VC series with Linear flow for proportional control (non-fail safe). Includes cartridge wrench.	
VCZZ7400/U	Replacement cartridge, red spring, for VC series with Equal Percentage flow for proportional control (non-fail safe). Includes cartridge wrench.	
VCZZ7500/U	Replacement cartridge, red spring, for VC series with Equal Percentage Extra Low flow for proportional control (non-fail safe). Includes cartridge wrench.	
VCZZ7600/U	Replacement cartridge, red spring, for VC series with Equal Percentage Low flow for proportional control (non-fail safe). Includes cartridge wrench.	
VCZZ7800/U	Replacement cartridge, red spring, for VC series with Equal Percentage flow for proportional control (non-fail safe). Includes cartridge wrench.	

VU52; VU53 Two-way Fan Coil Valves

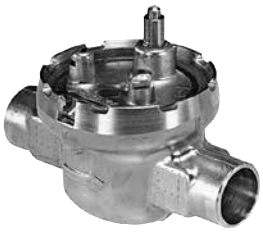

Two-way fan coil zone valves are used to control hot or chilled water in commercial HVAC equipment such as fan coil units, terminal reheat coils and convectors. Not for use in systems containing dissolved oxygen.

- Compact construction for easy installation.
- Fits under the cover of most baseboard convectors with actuator fitted to valve body.
- VU52 and VU53 provide 2-way, straight-through control of water.
- Available in normally closed (VU53) or normally open (VU52) configurations.
- 300 psi (2,000 kPa, PN20) operating pressure rating.
- Patented ball seal provides long service life, soft close off.
- Triple O-ring seal provides three lines of defense against corrosion and water leakage around drive shaft.
- Quick opening flow curve.
- Available with NPT end connections for iron or steel piping.

Dimensions in inches (millimeters)

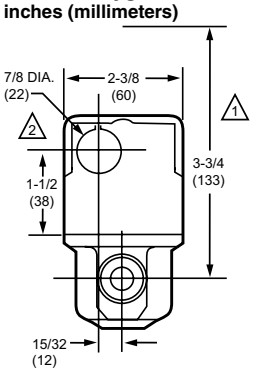

VU53 VALVE WITH VU448 ACTUATOR

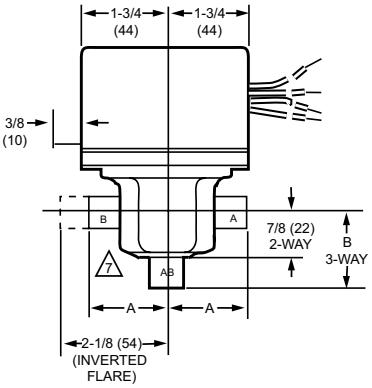

VU53 AND VU54 VALVE WITH ACTUATOR

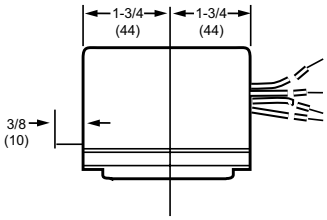

VU5 ACTUATOR

VALVE BODY SIZE	A	B
1/2 IN. SWEAT	1-5/6 (33)	1-5/6 (33)
3/4 IN. SWEAT	1-3/8 (35)	1-11/16 (43)
1 IN. SWEAT	1-11/16 (43)	1-11/16 (43)
1/2 IN. NPT	1-3/8 (35)	1-5/16 (33)
3/4 IN. NPT	1-11/16 (43)	1-7/16 (37)
1 IN. NPT	1-11/16 (43)	1-7/16 (37)

1 HEIGHT NEEDED TO REMOVE ACTUATOR OR COVER

2 OPENING FOR 1/2 IN. CONDUIT ON OPPOSITE SITE OF MANUAL LEVER FOR ALL MODELS.

M18261A

Valve Type: Fan Coil Valve
Body Pattern: Two-way, Straight-through
Valve Action: VU52-Normally Open; VU53-Normally Closed
Controlled Fluid: Chilled or hot water with up to 60% Glycol
Flow Characteristic: Quick Opening
Actuation: Must be purchased separately
Ambient Temperature Range: 34°F to 125°F at 200°F Fluid (1 to 52°C @ 94°C Fluid)
Maximum Safe Operating Pressure (psi): 300 psig
Maximum Safe Operating Pressure (kPa): 2068 kPa
Materials (Body): Brass
Materials (Seat): Brass
Materials (Stem): Brass
Materials (Plug / Ball / Disc): Buna-N rubber
Materials (Packing): EPDM rubber
Approvals, CSA: CSA C/US
Used With: For VU52 use VU444 or VU844 Actuator; For VU53 use VU443 or VU843 Actuator

Material Number	Pipe Size (inch)	Pipe Size (DN)	Capacity (Cv)	Capacity (Kv)	Connection Type	Maximum Differential Pressure Ratings (Close-off) (psi)	Maximum Differential Pressure Ratings (Close-off) (kPa)
VU52N1019/U	1/2 in.	DN15	3.5 Cv	3.0 Kv	Female NPT	20 psi	138 kPa
VU52N1027/U	1/2 in.	DN15	1.0 Cv	0.9 Kv	Female NPT	50 psi	345 kPa
VU52N1035/U	1/2 in.	DN15	2.4 Cv	2.1 Kv	Female NPT	30 psi	207 kPa
VU52S2002/U	1/2 in.	DN15	1.0 Cv	0.9 Kv	Sweat	50 psi	345 kPa
VU52S2010/U	1/2 in.	DN15	2.4 Cv	2.1 Kv	Sweat	30 psi	207 kPa
VU52S2028/U	1/2 in.	DN15	3.5 Cv	3.0 Kv	Sweat	20 psi	138 kPa
VU52S2036/U	3/4 in.	DN20	3.5 Cv	3.0 Kv	Sweat	20 psi	138 kPa
VU52S2044/U	3/4 in.	DN20	5.0 Cv	4.3 Kv	Sweat	15 psi	103 kPa
VU53N1009/U	1/2 in.	DN15	3.5 Cv	3.0 Kv	Female NPT	20 psi	138 kPa
VU53N1017/U	3/4 in.	DN20	8.0 Cv	7.0 Kv	Female NPT	10 psi	69 kPa
VU53N1026/U	1 in.	DN25	8.0 Cv	7.0 Kv	Female NPT	10 psi	69 kPa
VU53N1033/U	3/4 in.	DN20	3.5 Cv	3.0 Kv	Female NPT	20 psi	138 kPa
VU53N1041/U	1/2 in.	DN15	1.0 Cv	0.9 Kv	Female NPT	50 psi	345 kPa
VU53N1058/U	1/2 in.	DN15	2.4 Cv	2.1 Kv	Female NPT	30 psi	207 kPa
VU53N1066/U	3/4 in.	DN20	5.0 Cv	4.3 Kv	Female NPT	15 psi	103 kPa
VU53S2018/U	1/2 in.	DN15	1.0 Cv	0.9 Kv	Sweat	50 psi	345 kPa
VU53S2026/U	1/2 in.	DN15	2.4 Cv	2.1 Kv	Sweat	30 psi	207 kPa
VU53S2034/U	1/2 in.	DN15	3.5 Cv	3.0 Kv	Sweat	20 psi	138 kPa
VU53S2042/U	3/4 in.	DN20	3.5 Cv	3.0 Kv	Sweat	20 psi	138 kPa
VU53S2059/U	3/4 in.	DN20	8.0 Cv	7.0 Kv	Sweat	10 psi	69 kPa
VU53S2075/U	3/4 in.	DN20	5.0 Cv	4.3 Kv	Sweat	15 psi	103 kPa

VU54 Three-way Fan Coil Valves

Three-way fan coil zone valves are used to control hot or chilled water in commercial HVAC equipment such as fan coil units, terminal reheat coils and convectors.

- Compact construction for easy installation.
- Fits under the cover of most baseboard convectors with actuator fitted to valve body.
- VU54 provides three-way diverting control of water.
- 300 psi (2,000 kPa, PN20) operating pressure rating.
- Patented ball seal provides long service life, soft close off.
- Triple O-ring seal provides three lines of defense against corrosion and water leakage around drive shaft.
- Quick opening flow curve.
- Choice of NPT end connections for iron or steel piping.

Dimensions in inches (millimeters)

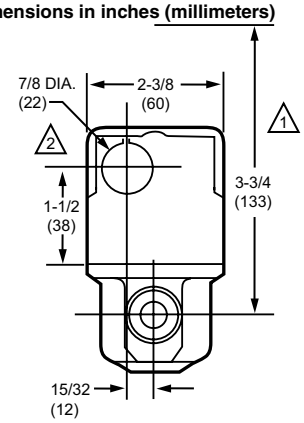

VU53 VALVE WITH VU448 ACTUATOR

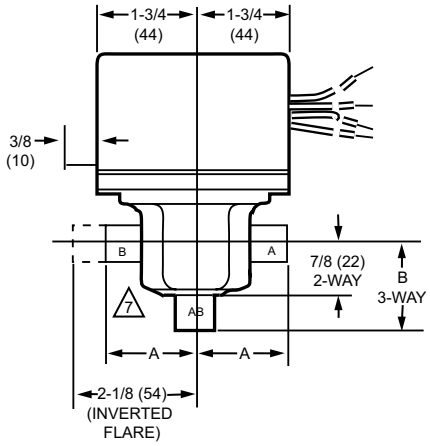

VU53 AND VU54 VALVE WITH ACTUATOR

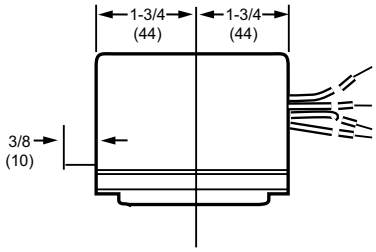

VU5 ACTUATOR

VALVE BODY SIZE	A	B
1/2 IN. SWEAT	1-5/6 (33)	1-5/6 (33)
3/4 IN. SWEAT	1-3/8 (35)	1-11/16 (43)
1 IN. SWEAT	1-11/16 (43)	1-11/16 (43)
1/2 IN. NPT	1-3/8 (35)	1-5/16 (33)
3/4 IN. NPT	1-11/16 (43)	1-7/16 (37)
1 IN. NPT	1-11/16 (43)	1-7/16 (37)

1 HEIGHT NEEDED TO REMOVE ACTUATOR OR COVER

2 OPENING FOR 1/2 IN. CONDUIT ON OPPOSITE SITE OF MANUAL LEVER FOR ALL MODELS.

M18261A

Valve Type: Fan Coil Valve
Body Pattern: Three-way A-AB-B
Valve Action: Diverting
Connection Type: VU54N-Female NPT; VU54S-Sweat
Controlled Fluid: Chilled or hot water with up to 60% Glycol
Flow Characteristic: Quick Opening
Actuation: Must be purchased separately
Ambient Temperature Range: 34°F to 125°F at 200°F Fluid (1 to 52°C @ 94°C Fluid)

Maximum Safe Operating Pressure (psi): 300 psig
Maximum Safe Operating Pressure (kPa): 2068 kPa
Materials (Body): Brass
Materials (Seat): Brass
Materials (Stem): Brass
Materials (Plug / Ball / Disc): Buna-N rubber
Materials (Packing): EPDM rubber
Approvals, CSA: CSA C/US
Used With: VU444 or VU844 Actuator

Material Number	Pipe Size (inch)	Pipe Size (DN)	Capacity (Cv)	Capacity (Kv)	Maximum Differential Pressure Ratings (Close-off) (psi)	Maximum Differential Pressure Ratings (Close-off) (kPa)
VU54N1007/U	1/2 in.	DN15	4.0 Cv	3.4 Kv	20 psi	138 kPa
VU54N1015/U	3/4 in.	DN20	7.0 Cv	6.5 Kv	10 psi	69 kPa
VU54N1023/U	1 in.	DN25	7.0 Cv	6.5 Kv	10 psi	69 kPa
VU54N1031/U	3/4 in.	DN20	4.0 Cv	3.4 Kv	20 psi	138 kPa
VU54N1049/U	3/4 in.	DN20	5.0 Cv	4.3 Kv	15 psi	103 kPa
VU54S2008/U	1/2 in.	DN15	4.0 Cv	3.4 Kv	20 psi	138 kPa
VU54S2016/U	3/4 in.	DN20	7.0 Cv	6.5 Kv	10 psi	69 kPa
VU54S2024/U	1 in.	DN25	7.0 Cv	6.5 Kv	10 psi	69 kPa
VU54S2057/U	3/4 in.	DN20	5.0 Cv	4.3 Kv	15 psi	103 kPa

VBF5011 Two-way Flanged Control Ball Valve

The VBF5011 Two-Way Control Ball Valve controls hot and chilled water with glycol solutions up to 50% in heating, ventilating and air conditioning (HVAC) systems. These valves can be used with Honeywell electronic actuators.

- Sizes from 2-1/2 in. to 6 in. with ANSI Class 125 flanged connections.
- Equal percentage or linear flow characteristics.
- Can be used with Honeywell electronic actutors.
- Field configurable for normally open or normally closed fail-safe position.
- 2-1/2 and 3 in. valves have removable manual operating handle to control valve during installation or in an event of power failure.
- ANSI Class IV leakage specification (0.01% of Cv).
- Option of four actuator mounting positions on the valve for 4, 5 and 6 in. valves.
- Wide range of CV choices from 63 to 360.
- Valve ball and stem 316 stainless steelfor all valves except 3 in. valve.

Valve Type: Control Ball Valve
Body Pattern: Two-way
Connection Type: Flanged
Controlled Fluid: Chilled or hot water with up to 50% Glycol.
Flow Characteristic: Equal Percentage

Actuation: No pre-assembled actuator
Fluid Temperature Range: -22°F to +250°F (-30°C to +121°C)
Materials (Seat): Teflon™
Leakage: ANSI Class IV (0.01% of Cv maximum)

Material Number	Pipe Size (inch)	Pipe Size (DN)	Capacity (Cv)	Capacity (Kv)	Maximum Safe Operating Pressure (psi)	Maximum Safe Operating Pressure (kPa)	Materials (Body)	Materials (Stem)	Materials (Plug / Ball / Disc)
VBF5011A1734/U	2 1/2 in.	DN65	63 Cv	54 Kv	360 psi	2482 kPa	Brass	Stainless Steel	Stainless Steel
VBF5011A1767/U	3 in.	DN80	100 Cv	86 Kv	360 psi	2482 kPa	Brass	Stainless Steel	Stainless Steel
VBF5011A1858/U	4 in.	DN100	160 Cv	138 Kv	240 psi	1655 kPa	Cast Iron	316 Stainless Steel	316 Stainless Steel
VBF5011A1882/U	5 in.	DN125	250 Cv	215 Kv	240 psi	1655 kPa	Cast Iron	316 Stainless Steel	316 Stainless Steel
VBF5011A1916/U	6 in.	DN150	360 Cv	310 Kv	240 psi	1655 kPa	Cast Iron	316 Stainless Steel	316 Stainless Steel

VBF5013 Three-way Flanged Control Ball Valve

The Honeywell VBF5013 Three-Way Control Ball Valve controls hot and chilled water with glycol solutions up to 50% in heating, ventilating and air conditioning (HVAC) systems. These valves can be used with Honeywell electronic actuators.

- Sizes from 2-1/2 in. to 6 in. with ANSI Class 125 flanged connections.
- Mixing or diverting control.
- Equal percentage or linear flow characteristics.
- Same flow pattern configuration as Globe valve.
- Can be used with Honeywell electronic actutors.
- Field configurable for normally open or normally closed fail-safe position.
- 2-1/2 and 3 in. valves have removable manual operating handle to control valve during installation or in an event of power failure.
- ANSI Class IV leakage specification (0.01% of Cv). A to AB; ANSI Class IV leakage. B to AB; ANSI Class III leakage.
- Option of four actuator mounting positions on the valve for 4, 5 and 6 in. valves.
- Wide range of Cv choices from 63 to 360.
- Valve ball and stem 316 stainless steelfor all valves except 3 in. valve.

Valve Type: Control Ball Valve
Body Pattern: Three-way
Connection Type: Flanged
Controlled Fluid: Chilled or hot water with up to 50% Glycol.
Flow Characteristic: Equal Percentage (A-AB); Linear (B-AB)

Actuation: No pre-assembled actuator
Fluid Temperature Range: -22°F to +250°F (-30°C to +121°C)
Materials (Seat): Teflon™
Leakage: ANSI Class IV (A to AB), ANSI Class III (B to AB)

Material Number	Pipe Size (inch)	Pipe Size (DN)	Capacity (Cv)	Capacity (Kv)	Maximum Safe Operating Pressure (psi)	Maximum Safe Operating Pressure (kPa)	Materials (Body)	Materials (Stem)	Materials (Plug / Ball / Disc)
VBF5013B1003/U	2 1/2 in.	DN65	63 Cv	54 Kv	360 psi	2482 kPa	Brass	Brass	Brass
VBF5013B1011/U	3 in.	DN80	100 Cv	86 Kv	360 psi	2482 kPa	Cast Iron	316 Stainless Steel	316 Stainless Steel
VBF5013B1029/U	4 in.	DN100	160 Cv	138 Kv	240 psi	1655 kPa	Cast Iron	316 Stainless Steel	316 Stainless Steel
VBF5013B1037/U	5 in.	DN125	250 Cv	215 Kv	240 psi	1655 kPa	Cast Iron	316 Stainless Steel	316 Stainless Steel
VBF5013B1045/U	6 in.	DN150	360 Cv	310 Kv	240 psi	1655 kPa	Cast Iron	316 Stainless Steel	316 Stainless Steel

M6410; M7410 Cartridge Globe Valve Actuator

Cartridge Globe Valve Actuators are small electric actuators for individual room control that provide floating or modulating control of V5852, V5862 two-way or V5853, V5863 three-way valves.

- Suitable for Excel/IRC system or other controllers providing specified signals.
- Magnetic coupling for torque limitation independent of voltage supply and self-adjustment of the close-off port.
- No mounting tools required.
- Small size allows installation in limited space of fan coil units, induction units, and small reheaters or recoolers.
- Visual position indication (red pin).

Dimensions in inches (millimeters)

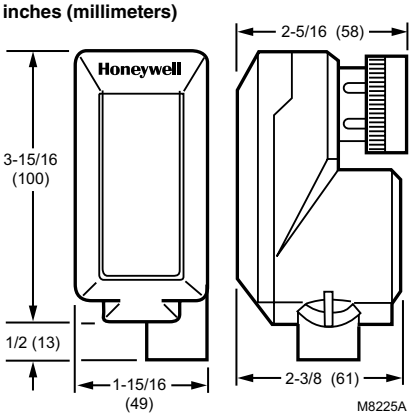

Application: HVAC
Actuator Type: Valve
Frequency: 50 Hz; 60 Hz
Fail Safe Mode: Stays in place
Internal Auxiliary Switch: 0
Switches: No
Stroke: 1/4 in. (6 mm)
Electrical Connections: Plenum-rated cable
Cable: Threaded conduit connector
Mounting: Threads onto V58XX valve bonnet
Timing, Nominal: Driving @ 60 Hz (sec) – 125 sec
Environmental, Electrical, or Ingress Protection Rating: IP42, Class I Insulation (24 Vac)
Feedback: No
Materials: Low Maintenance Plastic Housing
Manual operation: None (use valve dust cap)
Approximate, Dimensions: 2 3/8 in. high x 1 15/16 in. wide x 3 15/16 in. deep (61 mm high x 49 mm wide x 100 mm deep)
Ambient Temperature Range: 32°F to 122°F (0°C to 50°C)
Shipping and Storage Temperature Range: -40°F to +158°F (-40°C to +70°C)
Approvals, Underwriters Laboratories Inc.: Flammability Rating UL94V-5V
Operating Humidity Range (% RH): 5 to 95% RH
Includes: 1/2 in. conduit hub
Fluid Temperature: 266°F Maximum (130°C Maximum)
Supply Voltage: 24 Vac +10%, -30%

Material Number	Control Signal	Power Consumption	Input Impedance	Torque Rating (lb-in.)	Torque Rating (Nm)	Weight	Comments	Used With
M6410A1029	SPDT; Two position; Floating	Driving – 0.7 VA		40.5 lb-in.	180 Nm	0.3125 lb (0.15 kg)		1/2 inch and 3/4 inch V58XX Globe Valves
M6410A3017	SPDT; Two position; Floating	Driving – 0.7 VA		67.5 lb-in.	300 Nm	0.3125 lb (0.15 kg)	High force for metal-seated valves	1 inch to 1-1/2 inch V58XX Globe Valves
M7410F1000	0 to 10 Vdc; 2 to 10 Vdc	Driving – 1.4 VA	100K ohm	40.5 lb-in.	180 Nm	0.35 lb (0.16 kg)	Direct/Reverse Acting Switch	1/2 inch and 3/4 inch V58XX Globe Valves
M7410F3006	0 to 10 Vdc; 2 to 10 Vdc	Driving – 1.4 VA	100K ohm	67.5 lb-in.	300 Nm	0.35 lb (0.16 kg)	Direct/Reverse Acting Switch	1/2 inch and 3/4 inch V58XX Globe Valves

M6435; M7435 Cartridge Globe Valve Actuator

Cartridge Globe Valve Spring Return Actuators are small electric actuators for individual room control that provide floating or modulating control of V5852, V5862 two-way or V5853, V5863 three-way valves.

- Stem actuator retracts up on power failure. Fail safe mode depends on valve seat rest position.
- Suitable for Excel/IRC system or other controllers providing specified signals.
- Magnetic coupling for torque limitation independent of voltage supply and self-adjustment of the close-off port.
- No mounting tools required.
- Compact size allows installation in limited space of fan coil units, induction units, and small reheaters or recoolers.
- Visual position indication (red disk).

Dimensions in inches (millimeters)

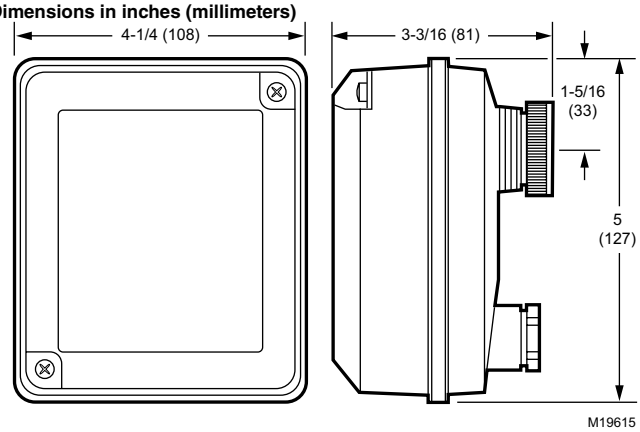

Application: HVAC
Actuator Type: Valve
Frequency: 50 Hz; 60 Hz
Fail Safe Mode: (Normally open for 1/2 in. and 3/4 in. V5852 and V5862. Normally closed for all other V58XX valves.); Spring Return, operator retracts up
Internal Auxiliary Switch: 0
Switches: No
Stroke: 1/4 in. (6 mm)
Electrical Connections: Screw terminals
Cable: Threaded conduit connector
Mounting: Threads onto V58XX valve bonnet
Timing, Nominal: Driving @ 60 Hz – 50 sec
Spring Return Timing: Nominal – 10 sec
Environmental, Electrical, or Ingress Protection Rating: IP54, Class I Insulation (24 Vac)
Feedback: No
Materials: Low Maintenance Plastic Housing
Manual operation: None (use valve dust cap)
Spring Return Direction: Stem up
Weight: 1.1 lb (0.5 kg)
Approximate, Dimensions: 3 3/16 in. high x 4 1/4 in. wide x 5 in. deep (81 mm high x 108 mm wide x 126 mm deep)
Ambient Temperature Range: 32°F to 122°F (0°C to 50°C)
Shipping and Storage Temperature Range: -40°F to +158°F (-40°C to +70°C)
Approvals, Underwriters Laboratories Inc.: Flammability Rating UL94V-5V
Operating Humidity Range (% RH): 5 to 95% RH
Includes: 1/2 in. conduit hub
Fluid Temperature: 266°F Maximum (130°C Maximum)
Supply Voltage: 24 Vac +20%, -15%

Material Number	Control Signal	Power Consumption	Input Impedance	Torque Rating (lb-in.)	Torque Rating (Nm)	Spring Return Torque/Force (lb-in., lbf)	Spring Return Torque/Force (Nm, N)	Comments	Used With
M6435A1004	SPDT; Two position; Floating	Driving – 10 VA		40.5 lb-in.	180 Nm	40.5 lbf	180 N		1/2 inch and 3/4 inch V58XX Globe Valves
M6435A3000	SPDT; Two position; Floating	Driving – 10 VA		90 lb-in.	400 Nm	90 lbf	400 N	High force for metal-seated valves	1 inch to 1-1/2 inch V58XX Globe Valves
M7435F1001	0 to 10 Vdc; 2 to 10 Vdc	Driving – 5 VA	100K ohm	40.5 lb-in.	180 Nm	40.5 lbf	180 N	Direct/Reverse Acting Switch	1/2 inch and 3/4 inch V58XX Globe Valves
M7435F3007	0 to 10 Vdc; 2 to 10 Vdc	Driving – 5 VA	100K ohm	90 lb-in.	400 Nm	90 lbf	400 N	Direct/Reverse Acting Switch; High force for metal-seated valves	1 inch to 1-1/2 inch V58XX Globe Valves

VC Series Two-position Actuators

Control central heating and/or cooling systems, fan coil systems, radiators and convectors. Depending on the model selected, the actuator can be controlled by either a low or line voltage SPST or SPDT controller such as a room thermostat.

- Use with two-way or three-way valves.
- Minimal actuator power consumption.
- Quick-connect or one meter cable electrical connections available.
- Quick and easy replacement of moving parts.
- Actuator head installation does not require draining the system.
- On/Off models with six second nominal timing
- Use two-position actuators with 1000 Series 2 way and 6000 Series 3-way VC valve bodies only.
- All VC Series actuator-valve combinations provide 60 psi close-off.

Application: HVAC
Actuator Type: Valve
Frequency: VC2, VC8 Series-60 Hz; VC4 Series-50 Hz, 60 Hz
Fail Safe Mode: Stays in place
Stroke: 0.4 in. (10 mm)
Mounting: Direct Coupled
Power Consumption: Driving – 6 VA
Timing, Nominal: Driving @ 60 Hz – 6 sec
Spring Return: 5 sec
Environmental, Electrical, or Ingress Protection Rating: Double Insulated, IP40
Materials: Plastic housing
Maximum Differential Pressure Ratings (Close-off) (psi): 60 psid
Maximum Differential Pressure Ratings (Close-off) (kPa): 400 kPa
Shaft Adapter Type: Self-alignment
Manual operation: Lever
Approximate, Dimensions: 2.8 in. high x 3.7 in. wide x 2.7 in. deep (70 mm high x 94 mm wide x 68 mm deep)
Ambient Temperature Range: 32°F to 150°F (0°C to 65°C)
Shipping and Storage Temperature Range: -40°F to +150°F (-40°C to +65°C)
Approvals, Underwriters Laboratories Inc.: UL Recognized, File# MH11826
Approvals, CSA: CSA Certified: LR1322-367
Approvals, CE: 89/336/ECC, 73/23/EEC
Operating Humidity Range (% RH): 5 to 95% RH, non-condensing
Used With: VC Series Valves, 1000 Series 2-way and 6000 Series 3-way
Fluid Temperature: 203°F (95°C)

Material Number	Control Signal	Internal Auxiliary Switch	Switches	Switch Ratings	Electrical Connections	Cable	Electrical Connections Size	Supply Voltage	Comments	Includes
VC2114ZZ11/U	Two position, SPDT	0			Plenum-rated cable	Molded strain relief, conduit clamp	5 ft. (1.5 m)	24 Vac		Flexible conduit adapter
VC2714ZZ11/U	Two position, SPDT	1	SPDT	2.2A (5 to 110 Vac)/1.0A (110 to 277 Vac) Inductive; Min. DC switching capability: 5 mA @ 24 Vac.	Plenum-rated cable	Molded strain relief, conduit clamp	5 ft. (1.5 m)	24 Vac		3/8 in. flex conduit adapter
VC4012ZZ00/U	Two position, SPST	0			Cable			240V		Valve body
VC4013ZZ00/U	Two position, SPST	0			Cable	Molded strain relief	39 in. (1 m)	240V		Valve body
VC4013ZZ11/U	Two position, SPST	0			Cable	Molded strain relief	39 in. (1 m)	200V to 240V		
VC4611ZZ11/U	Two position, SPST	1	SPDT	2.2A (5 to 110 Vac)/1.0A (110 to 277 Vac) Inductive; Min. DC switching capability: 5 mA @ 24 Vac.	Cable	Molded strain relief	39 in. (1 m)	120V		
VC8111ZZ11/U	Two position, SPST	0			Cable	Molded strain relief	39 in. (1 m)	24 Vac		
VC8114ZZ11/U	Two position, SPST	0			Plenum-rated cable	Molded strain relief, conduit clamp	5 ft. (1.5 m)	24 Vac		Flexible conduit adapter
VC8710ZZ03/U	Two position, SPST	1	SPDT	2.2A (5 to 110 Vac)/1.0A (110 to 277 Vac) Inductive; Min. DC switching capability: 5 mA @ 24 Vac.	Plenum-rated cable			24 Vac	Added 3K ohm 1/2W resistor to PCB for working with Honeywell power stealing thermostat	3/8 in. flex conduit adapter; Valve body
VC8711ZZ11/U	Two position, SPST	1	SPDT	2.2A (5 to 110 Vac)/1.0A (110 to 277 Vac) Inductive; Min. DC switching capability: 5 mA @ 24 Vac.	Cable	Molded strain relief	39 in. (1 m)	24 Vac		
VC8714ZZ11/U	Two position, SPST	1	SPDT	2.2A (5 to 110 Vac)/1.0A (110 to 277 Vac) Inductive; Min. DC switching capability: 5 mA @ 24 Vac.	Plenum-rated cable	Molded strain relief, conduit clamp	5 ft. (1.5 m)	24 Vac		Flexible conduit adapter
VC8715ZZ11/U	Two position, SPST	1	SPST	2.2A (5 to 110 Vac) Inductive; Min. DC switching capability: 5 mA @ 24V	Cable	Molded strain relief	39 in. (1 m)	24 Vac	With additional current draw (3W standby) for compatibility with Honeywell power stealing thermostats	

VC Series Proportional Actuators

Control central heating and cooling, fan coil systems, radiators and convectors. Depending on the model, the actuator can be controlled by a low voltage SPST or SPDT switch, pulse-width modulated 24 Vac signal, or floating input, modulating controller.

- Use with two-way or three-way valves.
- Double insulated actuator.
- Five foot plenum-rated cable.
- Quick and easy replacement of moving parts.
- Actuator head installation does not require draining the system.
- Selectable/switchable electronic fail safe normally open or normally closed.
- Available with valve bodies with 1000-series 2-way and 6000-series 3-way cartridges for new construction.
- All VC Series actuator-valve combinations provide 60 psi close-off.

Application: HVAC
Actuator Type: Valve
Frequency: 50 Hz; 60 Hz
Fail Safe Mode: Stays in place
Stroke: 0.4 in. (10 mm)
Mounting: Direct Coupled
Power Consumption: Driving – 6 VA
Timing, Nominal: Driving @ 60 Hz (sec) – 120 sec
Environmental, Electrical, or Ingress Protection Rating: Double Insulated, IP40
Materials: Plastic housing
Maximum Differential Pressure Ratings (Close-off) (psi): 60 psid
Maximum Differential Pressure Ratings (Close-off) (kPa): 400 kPa
Shaft Adapter Type: Self-alignment

Manual operation: Lever
Weight: 0.84 lb (0.38 kg)
Approximate, Dimensions: 2.8 in. high x 3.7 in. wide x 2.7 in. deep (70 mm high x 94 mm wide x 68 mm deep)
Ambient Temperature Range: 32°F to 150°F (0°C to 65°C)
Shipping and Storage Temperature Range: -40°F to +150°F (-40°C to +65°C)
Approvals, CSA: CSA Certified: LR1322-367
Approvals, CE: 89/336/ECC, 73/23/EEC
Operating Humidity Range (% RH): 5 to 95% RH, non-condensing
Used With: 3000 Series 2-way and 7000 Series VC valve bodies only
Fluid Temperature: 203°F (95°C)
Supply Voltage: 24 Vac

Material Number	Control Signal	Internal Auxiliary Switch	Switches	Switch Ratings	Electrical Connections	Cable	Electrical Connections Size	Approvals, Underwriters Laboratories Inc.	Includes
VC6834ZZ11/U	SP3T (tri-state) Floating; 24 Vac	1	SPDT	2.2A (5 to 110 Vac)/1.0A (110 to 277 Vac) Inductive; Min. DC switching capability: 5 mA @ 24 Vac.	Plenum-rated cable	Molded strain relief, conduit clamp	5 ft. (1.5 m)	Listed 94-5V	Flexible conduit adapter
VC6931ZZ11/U	SP3T (tri-state) Floating; 24 Vac	0			Cable	Molded strain relief	39 in. (1 m)	UL Recognized, File# MH11826	Flexible conduit adapter
VC6934ZZ11/U	SP3T (tri-state) Floating; 24 Vac	0			Plenum-rated cable	Molded strain relief, conduit clamp	5 ft. (1.5 m)	Listed 94-5V	Flexible conduit adapter
VC7931ZZ11/U	(0) 2-10 Vdc	0			Cable	Molded strain relief	39 in. (1 m)	UL Recognized, File# MH11826	
VC7934ZZ11/U	(0) 2-10 Vdc	0			Plenum-rated cable	Molded strain relief, conduit clamp	5 ft. (1.5 m)	Listed 94-5V	Flexible conduit adapter

VC Series Fail Safe Proportional Actuators

Control central heating and/or cooling systems, fan coil systems, radiators and convectors. Depending on the model selected, it can be controlled by either a low or line voltage SPST or SPDT or floating or modulating controller.

- Use with two-way or three-way valves.
- Minimal actuator power consumption.
- Double insulated actuator.
- Five foot plenum-rated cable electrical connections available.
- Quick and easy replacement of moving parts.
- Actuator head installation does not require draining the system.
- Selectable/switchable electronic fail safe normally open or normally closed.
- Includes valve bodies with 1000-series 2-way and 3000-series 3-way cartridges.
- All VC Series actuator-valve combinations provide 60 psi close-off.

Application: HVAC
Actuator Type: Valve
Frequency: 50 Hz; 60 Hz
Fail Safe Mode: N.O. or N.C., switchable electronic
Internal Auxiliary Switch: 0
Stroke: 0.4 in. (10 mm)
Electrical Connections: Plenum-rated cable
Cable: Molded strain relief, conduit clamp
Mounting: Direct Coupled
Power Consumption: Driving – 12 Watts, 18 VA inrush
Environmental, Electrical, or Ingress Protection Rating: Double Insulated, IP40
Spring Return Timing: Nominal – 12 sec
Materials: Plastic housing
Maximum Differential Pressure Ratings (Close-off) (psi): 60 psid
Maximum Differential Pressure Ratings (Close-off) (kPa): 400 kPa
Shaft Adapter Type: Self-alignment

Manual operation: Lever
Approximate, Dimensions: 2.8 in. high x 3.7 in. wide x 2.7 in. deep (70 mm high x 94 mm wide x 68 mm deep)
Ambient Temperature Range: 32°F to 150°F (0°C to 65°C)
Shipping and Storage Temperature Range: -40°F to +150°F (-40°C to +65°C)
Approvals, Underwriters Laboratories Inc.: Listed 94-5V
Approvals, CSA: CSA Certified: LR1322-367
Approvals, CE: 89/336/ECC, 73/23/EEC
Operating Humidity Range (% RH): 5 to 95% RH, non-condensing
Includes: Flexible conduit adapter
Used With: VC Series Valves, 1000 Series 2-way and 6000 Series 3-way with proportional cartridges
Fluid Temperature: 203°F (95°C)
Electrical Connections Size: 5 ft. (1.5 m)
Supply Voltage: 24 Vac

Material Number	Control Signal	Timing, Nominal	Weight	Comments
VC6936ZZ11-530/U	SP3T (tri-state) Floating; 24 Vac SPDT	Driving @ 60 Hz – 120 sec	0.84 lb (0.38 kg)	Power failure reposition installer-selectable for NC/NO. Use with series 60 controller (TB6980 or XL10). Replaces VC6936ZZ11-524/526/527.
VC7936ZZ11-529/U	24V Pulse Width Modulation; On/Off; 24 Vac Floating; 2 to 10 Vdc	Driving @ 60 Hz – 60 to 120 sec		Power failure reposition installer-selectable for NC/NO. Use with series 60/70/80 controller (TB6980, XL15, or XL10). Replaces VC7936ZZ11-523

VU443, VU444; VU843; VU844 Fan Coil Actuators

Humidity resistant fan coil valve actuators are used in conjunction with VU52, VU53 and VU54 valves for controlling the flow of hot or chilled water in commercial HVAC equipment such as fan coil units, terminal reheat coils and convectors.

- Compact construction for easy installation.
- Fits under the cover of most baseboard convectors with actuator fitted to valve body.
- One-button, quick release. Secure 3-point, metal latch to valve body.
- Spring return operation.
- Stainless steel case and aluminum cover. Rust-proof nickel-plated motors available.
- Line or low voltage, rust-resistant motors.
- Manual opener for installation and valve operation on power failure.
- Valve returns to automatic position when power is restored.
- Actuator may be reinstalled or serviced without draining the system or disassembling the valve.
- Slotted conduit hole for faster wiring.

Dimensions in inches (millimeters)

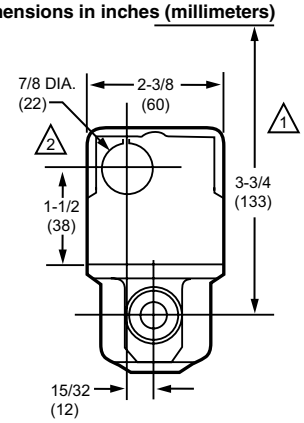

VU53 VALVE WITH VU448 ACTUATOR

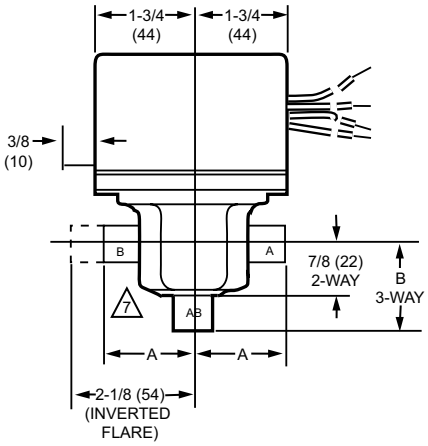

VU53 AND VU54 VALVE WITH ACTUATOR

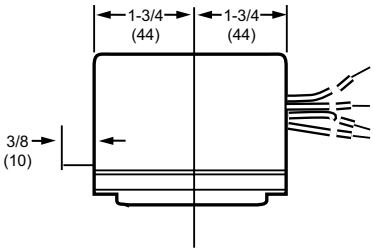

VU5 ACTUATOR

VALVE BODY SIZE	A	B
1/2 IN. SWEAT	1-5/6 (33)	1-5/6 (33)
3/4 IN. SWEAT	1-3/8 (35)	1-11/16 (43)
1 IN. SWEAT	1-11/16 (43)	1-11/16 (43)
1/2 IN. NPT	1-3/8 (35)	1-5/16 (33)
3/4 IN. NPT	1-11/16 (43)	1-7/16 (37)
1 IN. NPT	1-11/16 (43)	1-7/16 (37)

1 HEIGHT NEEDED TO REMOVE ACTUATOR OR COVER

2 OPENING FOR 1/2 IN. CONDUIT ON OPPOSITE SITE OF MANUAL LEVER FOR ALL MODELS.

M18261A

Application: For controlling the flow of hot or chilled water in commercial HVAC equipment such as fan coil units, terminal reheat coils and convectors
Actuator Type: Valve
Control Signal: Two position; SPST
Fail Safe Mode: Spring Return
Electrical Connections: Leads
Power Consumption: Driving – 6 Watts
Timing, Nominal: Driving @ 60 Hz (sec) – 15 sec maximum

Maximum Differential Pressure Ratings (Close-off) (psi): Depends on Cv rating of valve
Manual operation: Lever
Approximate, Dimensions: 2 3/8 in. high, 3 1/2 in. wide, 2 3/8 in. wide (62 mm high, 88 mm wide, 60 mm deep)
Ambient Temperature Range: 34°F to 125°F ambient at 200°F Fluid (1°C to 52°C ambient at 93°C Fluid)
Approvals, CSA: Certified C/US File No. LR1322
Fluid Temperature: 200°F (94°C)

Material Number	Frequency	Internal Auxiliary Switch	Stroke	Spring Return Timing	Materials	Supply Voltage	Electrical Connections Size	Comments	Used With
VU443A1008/U	60 Hz	0	22 deg.	Nominal – 4 sec	Stainless Case, Aluminum Cover	120V	6 in. (0.15 m)		2-way NC VU valve body (VU53)
VU443A1024/U	60 Hz	0	22 deg.	Nominal – 4 sec	Stainless Case, Aluminum Cover	208V	18 in. (0.5 m)		2-way NC VU valve body (VU53)
VU443A1057/U	60 Hz	0	22 deg.	Nominal – 4 sec	Stainless Case, Aluminum Cover	277V	18 in. (0.5 m)		2-way NC VU valve body (VU53)
VU443A1115/U	50 Hz; 60 Hz	0	22 deg.	Nominal – 4 sec	Stainless Case, Aluminum Cover	230V	6 in. (0.15 m)		2-way NC VU valve body (VU53)
VU444A1007/U	60 Hz	0	45 deg.	Nominal – 6 sec	Stainless Case, Aluminum Cover	120V	6 in. (0.15 m)		2-way NO (VU52) or 3-way VU valve body (VU54)
VU444A1098/U	60 Hz	0	45 deg.	Nominal – 6 sec	Stainless Case, Aluminum Cover	277V	18 in. (0.5 m)		2-way NO (VU52) or 3-way VU valve body (VU54)

Material Number	Frequency	Internal Auxiliary Switch	Stroke	Spring Return Timing	Materials	Supply Voltage	Electrical Connections Size	Comments	Used With
VU444A1106/U	50 Hz; 60 Hz	0	45 deg.	Nominal – 6 sec	Stainless Case, Aluminum Cover	230V	6 in. (0.15 m)		2-way NO (VU52) or 3-way VU valve body (VU54)
VU444A1155/U	60 Hz	0	45 deg.	Nominal – 6 sec	Stainless Case, Aluminum cover, Ni-plated motor	120V	6 in. (0.15 m)	Nickel plated motor for added humidity resistance	2-way NO (VU52) or 3-way VU valve body (VU54)
VU843A1004/U	50 Hz; 60 Hz	0	22 deg.	Nominal – 4 sec	Stainless Case, Aluminum Cover	24V	6 in. (0.15 m)		2-way NC VU valve body (VU53) VU443, VU444; VU843; VU844 Fan Coil Actuators
VU843A1087/U	50 Hz; 60 Hz	0	22 deg.	Nominal – 4 sec	Stainless Case, Aluminum cover, Ni-plated motor	24V	6 in. (0.15 m)	Nickel plated motor for added humidity resistance	2-way NC VU valve body (VU53)
VU844A1003/U	50 Hz; 60 Hz	0	45 deg.	Nominal – 6 sec	Stainless Case, Aluminum Cover	24V	6 in. (0.15 m)		2-way NO (VU52) or 3-way VU valve body (VU54)
VU844A1060/U	50 Hz; 60 Hz	0	45 deg.	Nominal – 6 sec	Stainless Case, Aluminum cover, Ni-plated motor	24V	6 in. (0.15 m)	Nickel plated motor for added humidity resistance	2-way NO (VU52) or 3-way VU valve body (VU54)

ML6420; ML7420 Non-Spring Return Direct Coupled Globe Valve Actuators

The Non-Spring Return Electric Linear Valve Actuators have floating or modulating control. These actuators operate standard Honeywell valves in heating, ventilating, and air conditioning (HVAC) applications.

- Easy and quick installation on valves with 1 3/8 in. bonnet and 3/4 in. stroke
- No separate linkage required
- Conduit connector standard
- No adjustments required on linkage
- Accurate valve positioning
- Low power consumption
- High close-off ratings
- Force limiting end switches
- Manual operator
- Synchronous motor
- Maintenance free
- ML7420 has an internal selector plug that can be used to reverse the direction of action

Dimensions in inches (millimeters)

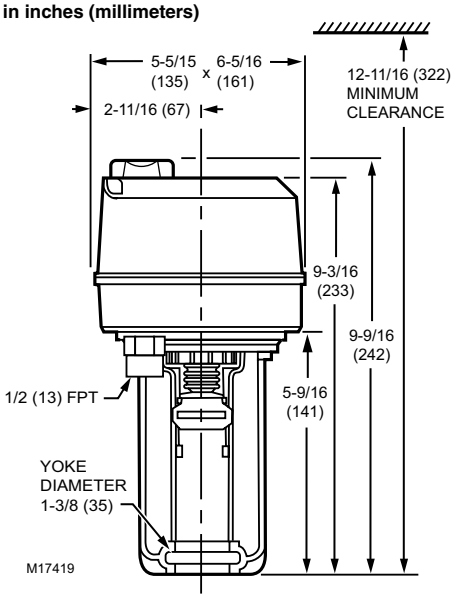

Application: HVAC
Actuator Type: Valve
Frequency: 50 Hz; 60 Hz
Fail Safe Mode: Stays in place
Torque Rating (lb-in.): 135 lb-in.
Torque Rating (Nm): 600 Nm
Internal Auxiliary Switch: 0
Switches: Yes
Stroke: 3/4 in. (20 mm)
Electrical Connections: Screw terminals
Cable: Conduit connector and one knockout on actuator case
Mounting: Directly on V5011/V5013 Globe Valves and VGF Flanged Globe Valves (3/4" or 20 mm stroke)
Weight: 2.9 lb (1.3 kg)
Environmental, Electrical, or Ingress Protection Rating: Class I Insulation (24 Vac), IP54
Materials: ABS-FR Plastic, aluminum yoke
Manual operation: Knob
Approximate, Dimensions: 9 9/16 in. high x 5 5/16 in. wide x 6 5/16 in. deep (242 mm high x 135 mm wide x 161 mm deep)
Ambient Temperature Range: 14°F to 122°F (-10°C to +50°C)
Shipping and Storage Temperature Range: -40°F to +158°F (-40°C to +70°C)
Approvals, Underwriters Laboratories Inc.: Flammability Rating UL94V-5V
Approvals, CSA: Certified
Approvals, CE: Listed
Operating Humidity Range (% RH): 5 to 95% RH
Fluid Temperature: 300°F Maximum (150°C Maximum)
Supply Voltage: 24 Vac ±15%

Accessories:
312495/U – Large stem button provides anti-spin for CREVAL actuators with globe valves up to 3 in.
43196000-001 – High Temperature Kit for actuators with 3/4 inch (20 mm) stroke, stem button attachment

Material Number	Control Signal	Feedback	Timing, Nominal	Power Consumption	Input Impedance	Includes
ML6420A3049	SPDT; Two position; Floating		Driving @ 60 Hz – 60 sec	Driving – 6 VA		1/2 in. conduit hub; 1/2 in. flexible conduit adapter
ML6420A3056	SPDT; Two position; Floating		Driving @ 60 Hz – 30 sec	Driving – 6 VA		1/2 in. conduit hub; 1/2 in. flexible conduit adapter
ML7420A3055	0 to 10 Vdc; 2 to 10 Vdc	2-10 Vdc	Driving @ 60 Hz – 60 sec	Driving – 7 VA	1K ohm	1/2 in. flexible conduit adapter; 1/2 in. conduit hub
ML7420A3063	0 to 10 Vdc; 2 to 10 Vdc	2-10 Vdc	Driving @ 60 Hz – 30 sec	Driving – 7 VA	1K ohm	1/2 in. conduit hub; 1/2 in. flexible conduit adapter

ML6421; ML7421 Non-Spring Return Direct Coupled Globe Valve Actuators

Direct Coupled Globe Valve Actuators provide floating or modulating control of chilled water, hot water, or steam, and mount directly on VGF series, V5011, and V5013 valves. These Non-Spring Return High Force Actuators will operate 1-1/2 to 6 inch valves.

- Easy and quick installation on valves with 1 3/8 in. bonnet and 3/4 in. stroke, or with 1 7/8 in. bonnet and 1 1/2 in. stroke
- High force for VGF Pressure-balanced valves
- No separate linkage required
- Conduit connector standard
- No adjustments required on linkage
- Accurate valve positioning
- Low power consumption
- High close-off ratings
- Force limiting end switches
- Manual operator
- Synchronous motor
- Maintenance free

Dimensions in inches (millimeters)

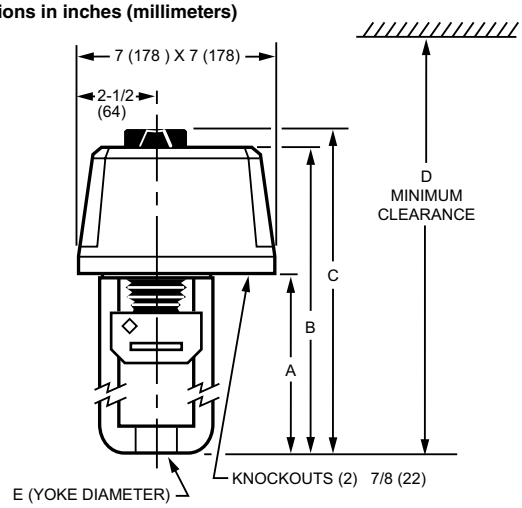

	ML6421A, ML7421A	ML6421B, ML7421B
A	5-5/8 (142)	8 (204)
B	9-3/8 (239)	11-7/8 (301)
C	10-3/8 (264)	12-3/4 (326)
D	14-1/4 (360)	16-7/8 (430)
E	1-3/8 (35)	1-7/8 (48)

M16827

Application: HVAC
Actuator Type: Valve
Frequency: 50 Hz; 60 Hz
Fail Safe Mode: Stays in place
Torque Rating (lb-in.): 405 lb-in.
Torque Rating (Nm): 1800 Nm
Internal Auxiliary Switch: 0
Switches: Yes
Electrical Connections: Screw terminals
Cable: Two knockout holes for 1/2 in. conduit standard on actuator case
Mounting: Directly on V5011/V5013 Globe Valves and VGF Flanged Globe Valves
Weight: 5.1 lb (2.3 kg)
Environmental, Electrical, or Ingress Protection Rating: Class I Insulation (24 Vac), IP54
Materials: ABS Plastic
Manual operation: Knob
Ambient Temperature Range: 14°F to 122°F (-10°C to +50°C)
Shipping and Storage Temperature Range: -40°F to +158°F (-40°C to +70°C)
Approvals, Underwriters Laboratories Inc.: Flammability Rating UL94V-5V
Approvals, CSA: Certified
Approvals, CE: Recognized
Operating Humidity Range (% RH): 5 to 95% RH
Fluid Temperature: 300°F Maximum (150°C Maximum)

Accessories:
312495/U – Large stem button provides anti-spin for CREVAL actuators with globe valves up to 3 in.
43191679-101 – Single Auxiliary Potentiometer for ML6421A, ML7421A
43191679-102 – 220 ohm Auxiliary Potentiometer for ML6421B
43191680-102 – Dual Aux. Switch for ML6421, ML7421
43196000-001 – High Temperature Kit for actuators with 3/4 inch (20 mm) stroke, stem button attachment
43196000-038 – High Temperature Kit for actuators with 1-1/2 inch (38 mm) stroke, stem button attachment

Material Number	Control Signal	Feedback	Stroke	Timing, Nominal	Power Consumption	Supply Voltage	Includes
ML6421A1017	SPDT; Two position; Floating		3/4 in. (20 mm)	Driving @ 60 Hz – 95 sec	Driving – 11 VA	24 Vac +10%, -30%	1/2 in. conduit hub; 1/2 in. flexible conduit adapter
ML6421B1040	SPDT; Two position; Floating		1 1/2 in. (38 mm)	Driving @ 60 Hz – 175 sec	Driving – 11 VA	24 Vac +10%, -15%	1/2 in. conduit hub; 1/2 in. flexible conduit adapter
ML7421A1032	0 to 10 Vdc; 2 to 10 Vdc	2-10 Vdc	3/4 in. (20 mm)	Driving @ 60 Hz – 95 sec	Driving – 12 VA	24 Vac +10%, -15%	1/2 in. flexible conduit adapter; 1/2 in. conduit hub
ML7421B1023	0 to 10 Vdc; 2 to 10 Vdc	2-10 Vdc	1 1/2 in. (38 mm)	Driving @ 60 Hz – 175 sec	Driving – 12 VA	24 Vac +10%, -15%	1/2 in. flexible conduit adapter; 1/2 in. conduit hub

ML6425; ML7425 Spring Return Direct Coupled Globe Valve Actuators

Direct Coupled Globe Valve Actuators provide floating and modulating control of chilled water, hot water, and steam, and mount directly on VGF series, V5011, and V5013 globe valves. These Spring Return Actuators will operate 1/2 to 3 inch valves.

- Easy and quick installation on valves with 1 3/8 in. bonnet and 3/4 in. stroke
- No separate linkage required
- Conduit connector standard
- No adjustments required on linkage
- Accurate valve positioning
- Low power consumption
- High close-off ratings
- Force limiting end switches
- Internal manual operator
- Synchronous motor
- Maintenance free

Dimensions in inches (millimeters)

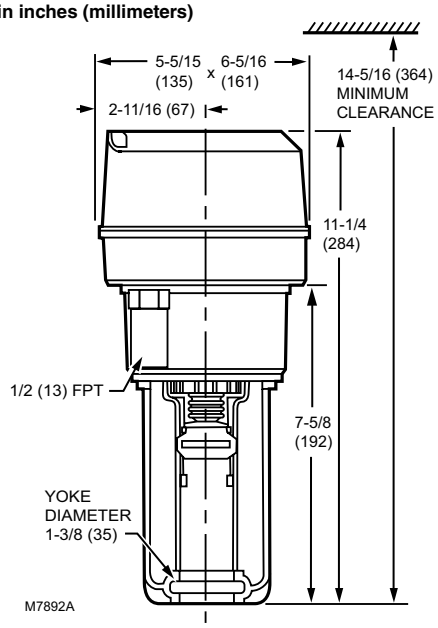

Application: HVAC
Actuator Type: Valve
Frequency: 50 Hz; 60 Hz
Torque Rating (lb-in.): 135 lb-in.
Torque Rating (Nm): 600 Nm
Spring Return Torque/Force (lb-in., lbf): 135 lb-in.
Spring Return Torque/Force (Nm, N): 600 Nm
Internal Auxiliary Switch: 0
Switches: Yes
Stroke: 3/4 in. (20 mm)
Electrical Connections: Screw terminals
Cable: Conduit connector and one knockout on actuator case
Mounting: Directly on V5011/V5013 Globe Valves and VGF Flanged Globe Valves (3/4" or 20 mm stroke)
Timing, Nominal: Driving @ 60 Hz – 90 sec
Spring Return Timing: Nominal – 12 sec
Environmental, Electrical, or Ingress Protection Rating: Class I Insulation (24 Vac), IP54
Materials: ABS-FR Plastic, aluminum yoke
Manual operation: Manual override winding
Weight: 5.1 lb (2.3 kg)
Approximate, Dimensions: 11 1/4 in. high x 5 5/16 in. wide x 6 5/16 in. deep (284 mm high x 135 mm wide x 161 mm deep)
Ambient Temperature Range: 14°F to 122°F (-10°C to +50°C)
Shipping and Storage Temperature Range: -40°F to +158°F (-40°C to +70°C)
Approvals, Underwriters Laboratories Inc.: Flammability Rating UL94V-5V
Approvals, CE: Recognized
Operating Humidity Range (% RH): 5 to 95% RH
Fluid Temperature: 300°F Maximum (150°C Maximum)

Accessories:
312495/U – Large stem button provides anti-spin for CREVAL actuators with globe valves up to 3 in.
43191679-111 – Potentiometer, 10k ohm, for ML6425 only
43191679-112 – Potentiometer, 220 ohm - for ML6425 only
43191680-105 – Dual Aux. Switch for ML6425 only
43196000-001 – High Temperature Kit for actuators with 3/4 inch (20 mm) stroke, stem button attachment

Material Number	Control Signal	Feedback	Power Consumption	Supply Voltage	Spring Return Direction	Fail Safe Mode	Includes
ML6425A3022	Two position; Floating; SPDT		Driving – 11 VA	24 Vac	Stem down on power failure	Stem down on power failure	1/2 in. conduit hub; 1/2 in. flexible conduit adapter
ML6425B3013	Two position; Floating; SPDT		Driving – 11 VA	24 Vac	Stem up on power failure	Stem up on power failure	1/2 in. flexible conduit adapter; 1/2 in. conduit hub
ML7425A3013	0 to 10 Vdc; 2 to 10 Vdc	2-10 Vdc	Driving – 12 VA	24 Vac ±15%	Stem down on power failure	Stem down on power failure	1/2 in. conduit hub; 1/2 in. flexible conduit adapter
ML7425B3012	0 to 10 Vdc; 2 to 10 Vdc	2-10 Vdc	Driving – 12 VA	24 Vac ±15%	Stem up on power failure	Stem up on power failure	1/2 in. flexible conduit adapter; 1/2 in. conduit hub

ML6984 Direct Coupled Linear Valve Actuators

Self-contained, self-adjusting, motorized linkage that mounts directly onto V5011 two-way or V5013 three-way valves and provides up to 1" (25 mm) of linear stem travel.

- Allows the use of one common transformer power supply for multiple actuators and controllers
- Self-contained, motorized valve linkage
- Linkage self-adjusts to valve stroke of 1/2 to 1 in. (12 to 25 mm)
- Multi-pose mounting
- Strong valve seat closing force 160 lb-in. (710 Nm)
- Compact size for easy installation in confined area.
- One device for either 24 Vac or 28 Vdc power supply application
- Electronic current sensing provides internal protection and positive full closing force
- Field-addable position feedback/auxiliary switch module available (5-wire control wiring only)
- ML6984 models are compatible with 3-wire control systems

Dimensions in inches (millimeters)

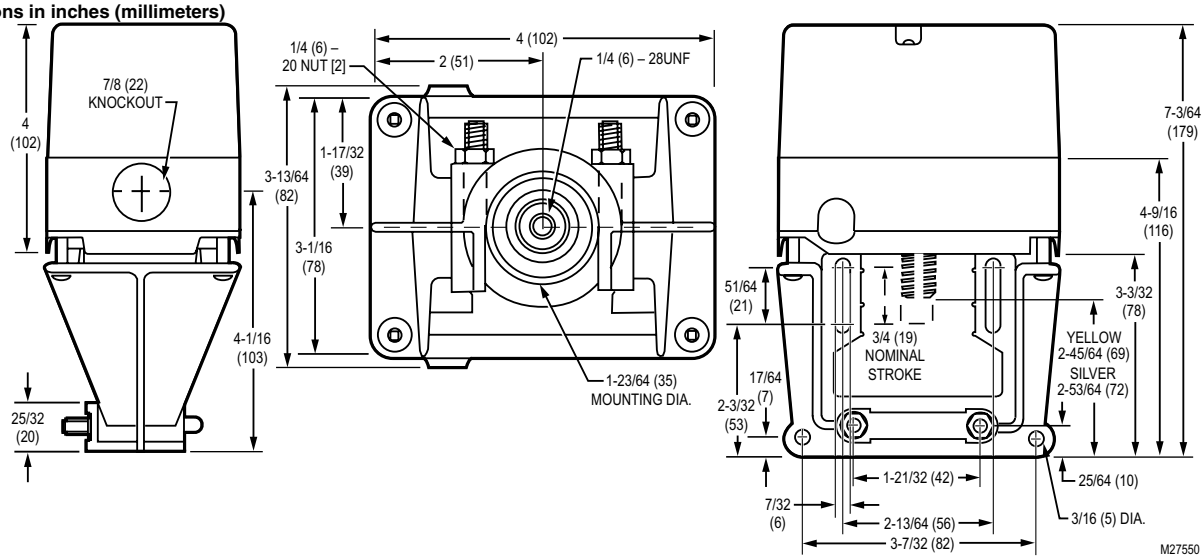

Application: HVAC
Actuator Type: Valve
Frequency: 50 Hz; 60 Hz
Fail Safe Mode: Stays in place
Torque Rating (lb-in.): 160 lb-in.
Torque Rating (Nm): 710 Nm
Internal Auxiliary Switch: 0
Switches: SPDT w/ 272630D
External Auxiliary Switches Available: 272630D
Stroke: 1/2 to 1 in. (13 to 25 mm)
Electrical Connections: Screw terminals
Cable: 7/8 in. hole for 1/2 in. conduit
Mounting: Screws onto 1/4-28 UNF threaded valve stem
Environmental, Electrical, or Ingress Protection Rating: NEMA 3R, NEMA 3R, IP54 (mounted in vertical position)
Feedback: Position feedback available w/ 272630D; 2-10 Vdc
Materials: UV-stabilized plastic cover, aluminum base & yoke
Manual operation: None

Weight: 2.2 lb (1 kg)
Approximate, Dimensions: 6 13/16 in. high x 4 in. wide x 3 3/16 in. deep (173 mm high x 102 mm wide x 82 mm deep)
Ambient Temperature Range: 32°F to 130°F (0°C to 50°C)
Shipping and Storage Temperature Range: -40°F to +150°F (-40°C to + 65°C)
Operating Humidity Range (% RH): 15 to 95% RH at 104°F (40°C)
Includes: Screw terminals
Comments: 3 or 5-wire operation; (3-wire required for XL10 controllers)
Fluid Temperature: 300°F Maximum (150°C Maximum)
Supply Voltage: 28 Vdc; 24 Vac

Accessories:
272629A/U – Adapter Kit for mounting ML6984/ML7984 to V5045 and VGF non-pressure balanced 2-way valves
272630D/U – 2-10V position feedback w/aux. sw.

Material Number	Control Signal	Timing, Nominal	Switch Ratings	Power Consumption	Used With
ML6984A4000/U	SPDT; Two position; Floating	Driving @ 60 Hz – 63 at 3/4 in. stroke	24 Vac	Driving – 6 VA, Holding – 12 VA	V5011/13, VGF21, and VGF22 up to 3 in.; V5045 w/ 272629A

ML7984 Direct Coupled Linear Valve Actuators

Self-contained, self-adjusting, motorized linkage that mounts directly onto V5011 two-way or V5013 three-way valves and provides up to 1" (25 mm) of linear stem travel.

- Allows the use of one common transformer power supply for multiple actuators and controllers
- Self-contained, motorized valve linkage
- Linkage self-adjusts to valve stroke of 1/2 to 1 in. (12 to 25 mm)
- Multi-pose mounting
- Strong valve seat closing force 160 lb-in. (710 Nm)
- Compact size for easy installation in confined area.
- One device for either 24 Vac or 28 Vdc power supply application
- Electronic current sensing provides internal protection and positive full closing force
- Field-addable position feedback/auxiliary switch module available (5-wire control wiring only)
- ML6984 models are compatible with 3-wire control systems

Dimensions in inches (millimeters)

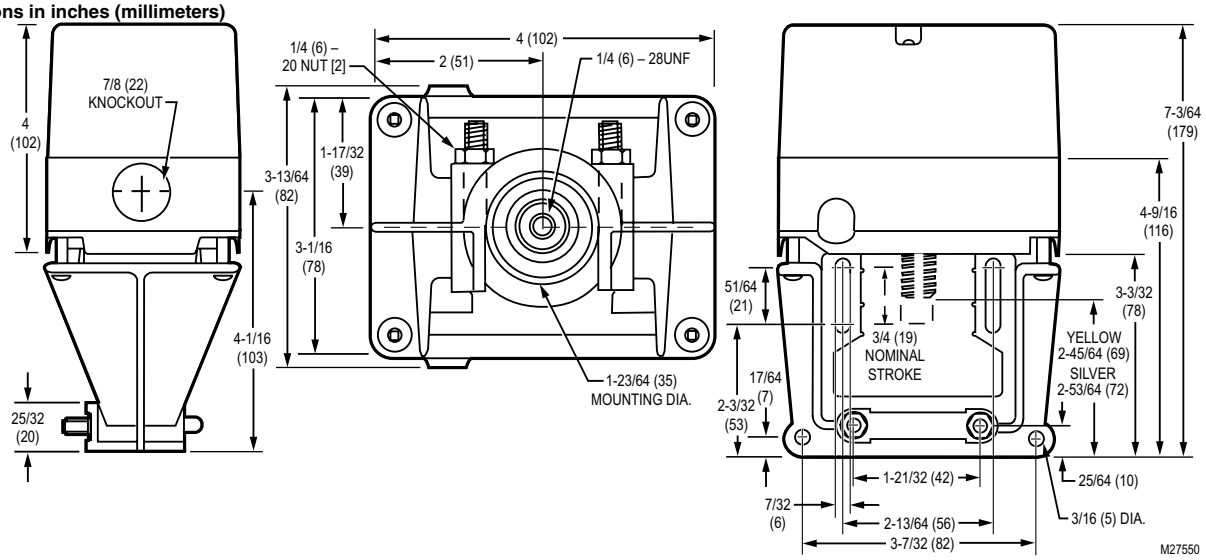

Application: HVAC
Actuator Type: Valve
Frequency: 50 Hz; 60 Hz
Fail Safe Mode: Stays in place
Torque Rating (lb-in.): 160 lb-in.
Torque Rating (Nm): 710 Nm
Internal Auxiliary Switch: 0
Switches: SPDT w/ 272630D
External Auxiliary Switches Available: 272630D
Stroke: 1/2 to 1 in. (13 to 25 mm)
Electrical Connections: Screw terminals
Cable: 7/8 in. hole for 1/2 in. conduit
Mounting: Screws onto 1/4-28 UNF threaded valve stem
Environmental, Electrical, or Ingress Protection Rating: NEMA 3R, IP54 (mounted in vertical position), NEMA 3R
Feedback: Position feedback available w/ 272630D; 2-10 Vdc
Materials: UV-stabilized plastic cover, aluminum base & yoke

Manual operation: None
Weight: 2.2 lb (1 kg)
Approximate, Dimensions: 6 13/16 in. high x 4 in. wide x 3 3/16 in. deep (173 mm high x 102 mm wide x 82 mm deep)
Ambient Temperature Range: 32°F to 130°F (0°C to 55°C)
Shipping and Storage Temperature Range: -40°F to +150°F (-40°C to + 65°C)
Operating Humidity Range (% RH): 15 to 95% RH at 104°F (40°C)
Includes: Screw terminals
Comments: Direct/Reverse Acting Switch
Supply Voltage: 28 Vdc; 24 Vac

Accessories:
272629A/U – Adapter Kit for mounting ML6984/ML7984 to V5045 and VGF non-pressure balanced 2-way valves
272630D/U – 2-10V position feedback w/aux. sw.

Material Number	Control Signal	Timing, Nominal	Switch Ratings	Power Consumption	Input Impendance	Used With
ML7984A4009/U	2 to 10 Vdc; SuperMod; 135 ohm potentiometer; 4 to 20 mA	Driving @ 60 Hz – 63 at 3/4 in. stroke	24 Vac	Driving – 6 VA, Holding – 12 VA	Voltage - 20 K ohm, Current - 237 ohm	V5011/13, VGF21, and VGF22 up to 3 in.; V5045 w/ 272629A

Valve Actuator Accessories

Material Number	Description	Used With	
127834A/U	SWITCH (MADE)		
272629A/U	Adapter Kit for mounting ML6984/ML7984 to V5045 and VGF non-pressure balanced 2-way valves	ML6984 or ML7984, V5045; VGF21ES; VGF21LS, VGF22ES; VGF22LS	
272630D/U	2-10V position feedback w/aux. sw.	ML6984/ML7984 Series 4000 and higher (ML6984 in 5-wire mode only)	
312495/U	Large stem button provides anti-spin for CREVAL actuators with globe valves up to 3 in.	Not required with ML6984/M7984 Actuators or linkage; Not compatible with Q5020 linkage; ML6420, ML6421, ML6425, ML7420, ML7421, or ML7425	
40003793-005/U	U-bolt bag assembly for ML6984 & ML7984.	ML6984 or ML7984	
43191679-101	Single Auxiliary Potentiometer for ML6421A, ML7421A	ML6421A	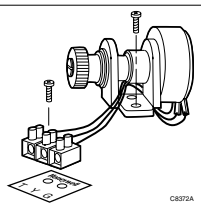
43191679-102	220 ohm Auxiliary Potentiometer for ML6421B	ML6421B	
43191679-111	Potentiometer, 10k ohm, for ML6425 only	ML6425 only	
43191679-112	Potentiometer, 220 ohm - for ML6425 only	ML6425 only	
43191680-102	Dual Aux. Switch for ML6421, ML7421	ML6421, ML7421	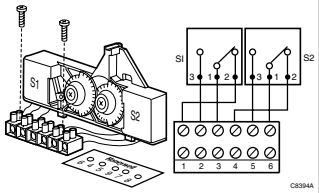
43191680-105	Dual Aux. Switch for ML6425 only	for ML6425 only	
43196000-001	High Temperature Kit for actuators with 3/4 inch (20 mm) stroke, stem button attachment	Used With ML6420, ML6421A, ML6425, ML7420, ML7421A, or ML7425; ML6984; ML7984; Not compatible with Q5022A	
43196000-038	High Temperature Kit for actuators with 1-1/2 inch (38 mm) stroke, stem button attachment	Used with ML6421B, ML7421B; Not Compatible with Q5022B	

SmartVFD COMPACT

You already know the energy savings variable frequency drives (VFDs) deliver. With the Honeywell SmartVFD COMPACT, you select the capabilities you need. Our compact line lets you customize the drive features to the application, eliminating waste. The COMPACT provide the perfect balance, with essential features like a standard PI Controller and the ability to program without the need for line voltage. It is a true micro drive and is among the smallest, most streamlined VFDs on the market, which saves space in your equipment cabinet. Along with the compact size for installation ease, the intuitive user interface makes commissioning a breeze.

- Easy commissioning
  - Intuitive user interface
  - PID controller included
  - Program without the need for a main power supply
- Easy installation
  - The most streamlined VFDs on the market
  - DIN rail or screw mounting
  - Side-by-side mounting
- Easy communication
  - Up to seven programming control inputs
  - Up to three programmable control outputs
  - Several field bus options available

Drive Family: SmartVFD COMPACT
Acceleration time: 0.1 - 3000 sec
Deceleration time: .1 - 3000 sec
Analog Current Input: 0 (4) - 20 mA, 250 ohm differential
Analog Voltage Input: 0 - 10 Vdc, 200K ohm
Analog Current Output: 0 (4) - 20 mA, max 500 ohm
Digital Output: Open collector, max. load 48V/50mA
Continuous Output Current: overload 1.5 x High overload current (1min/10min); overload 1.1 x Low overload current (1min/10min)
Relay Output: Max. switching load: 250Vac/2A or 250Vdc/0,4A
Reference Output Voltage: Maximum Load 10mA

Auxiliary Voltage: ± 20%, max. load 50 mA
Starting Torque: Depends on the Motor
Peak Current: 2 x IN, 2 secs in every 20 sec period
Frequency (Hz): 0 Hz to 320 Hz
Operating Temperature: 14°F to 122°F (-10°C to 50°C)
Type of Enclosure: Open Chassis
Type of RFI Filter: EMC Filter
Configuration: Drive alone

HVFDCD	VFD Compact Drive							**Product Family**
	1	Single Phase (1-in, 3-out)						**Phases**
	3	Triple Phase (3-in, 3-out)						
		A	110V					**Nominal Voltage**
		B	208V to 230V					
		C	480V					
		D	600V					
			0007	0.75 HP				**Nominal Horsepower**
			0010	1 HP				
			0100	10 HP				
				F	Full IO (6 DI, 1AI, 3 DO, 1, AO			**Control I/O**
					0	Open Chassis (IP20)		**Enclosures**
						0	No Filter	**EMC Filter**
						1	Filter Included	
HVFDCD	**3**	**C**	**0000**	**F**	**0**	**0**	Example	

SmartVFD COMPACT

Material Number	Voltage	Horsepower	EMC Filter	Frame Type	Current Ratings	Software	Approximate, Dimensions in. (mm)	Weight
HVFDCD1A0003F00/U	115V/230V 1/3	.25 HP	No	2	1.7A	Full	7.7 x 3.5 x 4 (195 x 90 x 102)	1.5 lb (0.68 kg)
HVFDCD1A0005F00/U	115V/230V 1/3	.5 HP	No	2	2.4A	Full	7.7 x 3.5 x 4 (195 x 90 x 102)	1.5 lb (0.68 kg)
HVFDCD1A0010F00/U	115V/230V 1/3	1 HP	No	2	3.7A	Full	7.7 x 3.5 x 4 (195 x 90 x 102)	1.5 lb (0.68 kg)
HVFDCD1A0015F00/U	115V/230V 1/3	1.5 HP	No	3	4.8A	Full	9.9 x 3.9 x 4.3 (251 x 100 x 109)	2.2 lb (1 kg)
HVFDCD1B0003F01/U	230V 1/3	.25 HP	Yes	1	1.7A	Full	6.2 x 2.6 x 3.9 (157 x 66 x 98)	1.2 lb (0.54 kg)
HVFDCD1B0005F01/U	230V 1/3	0.5 HP	Yes	1	2.4A	Full	6.2 x 2.6 x 3.9 (157 x 66 x 98)	1.2 lb (0.54 kg)
HVFDCD1B0007F01/U	230V 1/3	0.75 HP	Yes	1	2.8A	Full	6.2 x 2.6 x 3.9 (157 x 66 x 98)	1.2 lb (0.54 kg)
HVFDCD1B0010F01/U	230V 1/3	1 HP	Yes	1	3.7A	Full	6.2 x 2.6 x 3.9 (157 x 66 x 98)	1.2 lb (0.54 kg)
HVFDCD1B0015F01/U	230V 1/3	1.5 HP	Yes	2	4.8A	Full	7.7 x 3.5 x 4 (195 x 90 x 102)	1.5 lb (0.68 kg)
HVFDCD1B0020F01/U	230V 1/3	2 HP	Yes	2	7.0A	Full	7.7 x 3.5 x 4 (195 x 90 x 102)	1.5 lb (0.68 kg)
HVFDCD1B0030F01/U	230V 1/3	3 HP	Yes	3	11.0A	Full	9.9 x 3.9 x 4.3 (251 x 100 x 109)	2.2 lb (1 kg)
HVFDCD3B0003F00/U	230V 3/3	.25 HP	No	1	1.7A	Full	6.2 x 2.6 x 3.9 (157 x 66 x 98)	1.2 lb (0.54 kg)
HVFDCD3B0005F00/U	230V 3/3	.5 HP	No	1	2.4A	Full	6.2 x 2.6 x 3.9 (157 x 66 x 98)	1.2 lb (0.54 kg)
HVFDCD3B0010F00/U	230V 3/3	1 HP	No	2	3.7A	Full	7.7 x 3.5 x 4 (195 x 90 x 102)	1.5 lb (0.68 kg)
HVFDCD3B0020F00/U	230V 3/3	2 HP	No	2	7A	Full	7.7 x 3.5 x 4 (195 x 90 x 102)	1.5 lb (0.68 kg)
HVFDCD3B0030F00/U	230V 3/3	3 HP	No	3	11A	Full	9.9 x 3.9 x 4.3 (251 x 100 x 109)	2.2 lb (1 kg)
HVFDCD3C0005F00/U	460V 3/3	0.5 HP	No	1	1.3A	Full	6.2 x 2.6 x 3.9 (157 x 66 x 98)	1.2 lb (0.54 kg)
HVFDCD3C0005F01/U	460V 3/3	0.5 HP	Yes	1	1.3A	Full	6.2 x 2.6 x 3.9 (157 x 66 x 98)	1.2 lb (0.54 kg)
HVFDCD3C0007F00/U	460V 3/3	0.75 HP	No	1	1.9A	Full	6.2 x 2.6 x 3.9 (157 x 66 x 98)	1.2 lb (0.54 kg)
HVFDCD3C0007F01/U	460V 3/3	0.75 HP	Yes	1	1.9A	Full	6.2 x 2.6 x 3.9 (157 x 66 x 98)	1.2 lb (0.54 kg)
HVFDCD3C0010F00/U	460V 3/3	1 HP	No	1	2.4A	Full	6.2 x 2.6 x 3.9 (157 x 66 x 98)	1.2 lb (0.54 kg)
HVFDCD3C0010F01/U	460V 3/3	1 HP	Yes	1	2.4A	Full	6.2 x 2.6 x 3.9 (157 x 66 x 98)	1.2 lb (0.54 kg)
HVFDCD3C0015F00/U	460V 3/3	1.5 HP	No	1	3.3A	Full	6.2 x 2.6 x 3.9 (157 x 66 x 98)	1.2 lb (0.54 kg)
HVFDCD3C0015F01/U	460V 3/3	1.5 HP	Yes	1	3.3A	Full	6.2 x 2.6 x 3.9 (157 x 66 x 98)	1.2 lb (0.54 kg)
HVFDCD3C0020F00/U	460V 3/3	2 HP	No	2	4.3A	Full	7.7 x 3.5 x 4 (195 x 90 x 102)	1.5 lb (0.68 kg)
HVFDCD3C0020F01/U	460V 3/3	2 HP	Yes	2	4.3A	Full	7.7 x 3.5 x 4 (195 x 90 x 102)	1.5 lb (0.68 kg)
HVFDCD3C0030F00/U	460V 3/3	3 HP	No	2	5.6A	Full	7.7 x 3.5 x 4 (195 x 90 x 102)	1.5 lb (0.68 kg)
HVFDCD3C0030F01/U	460V 3/3	3 HP	Yes	2	5.6A	Full	7.7 x 3.5 x 4 (195 x 90 x 102)	1.5 lb (0.68 kg)
HVFDCD3C0040F00/U	460V 3/3	4 HP	No	3	7.6A	Full	9.9 x 3.9 x 4.3 (251 x 100 x 109)	2.2 lb (1 kg)
HVFDCD3C0040F01/U	460V 3/3	4 HP	Yes	3	7.6A	Full	9.9 x 3.9 x 4.3 (251 x 100 x 109)	2.2 lb (1 kg)
HVFDCD3C0050F00/U	460V 3/3	5 HP	No	3	9.0A	Full	9.9 x 3.9 x 4.3 (251 x 100 x 109)	2.2 lb (1 kg)
HVFDCD3C0050F01/U	460V 3/3	5 HP	Yes	3	9.0A	Full	9.9 x 3.9 x 4.3 (251 x 100 x 109)	2.2 lb (1 kg)
HVFDCD3C0075F00/U	460V 3/3	7.5 HP	No	3	12.0A	Full	9.9 x 3.9 x 4.3 (251 x 100 x 109)	2.2 lb (1 kg)
HVFDCD3C0075F01/U	460V 3/3	7.5 HP	Yes	3	12.0A	Full	9.9 x 3.9 x 4.3 (251 x 100 x 109)	2.2 lb (1 kg)
HVFDCD3D0010F00/U	600V 3/3	1 HP	No	3	2A	Full	9.9 x 3.9 x 4.3 (251 x 100 x 109)	2.2 lb (1 kg)
HVFDCD3D0020F00/U	600V 3/3	2 HP	No	3	3.6A	Full	9.9 x 3.9 x 4.3 (251 x 100 x 109)	2.2 lb (1 kg)
HVFDCD3D0030F00/U	600V 3/3	3 HP	No	3	5A	Full	9.9 x 3.9 x 4.3 (251 x 100 x 109)	2.2 lb (1 kg)
HVFDCD3D0050F00/U	600V 3/3	5 HP	No	3	7.6A	Full	9.9 x 3.9 x 4.3 (251 x 100 x 109)	2.2 lb (1 kg)
HVFDCD3D0075F00/U	600V 3/3	7.5 HP	No	3	10.4A	Full	9.9 x 3.9 x 4.3 (251 x 100 x 109)	2.2 lb (1 kg)

SmartVFD COMPACT Accessories

Material Number	Description	Used With	
HVFDCABLE/U	SmartVFD HVAC and COMPACT USB Commissioning Cable	SmartVFD COMPACT	
HVFDCDMCA/U	COMPACT VFD Commissioning device	SmartVFD COMPACT	
HVFDCDMCAKIT/U	COMPACT VFD COMMISSIONING KIT (contains HVFDCABLE and HVFDCDMCA)	SmartVFD COMPACT	
HVFDCDNEMA1FR1/U	COMPACT VFD NEMA 1 KIT	SmartVFD COMPACT	
HVFDCDNEMA1FR2/U	COMPACT VFD NEMA 1 KIT	SmartVFD COMPACT	
HVFDCDNEMA1FR3/U	COMPACT VFD NEMA 1 KIT	SmartVFD COMPACT	
HVFDCDTRAINER/U	COMPACT VFD TRAINING DEMONSTRATION KIT	SmartVFD COMPACT	

SmartVFD HVAC

The Honeywell SmartVFD HVAC and BYPASS are designed specifically for commercial buildings to deliver the energy savings that building owners and facility managers need. The SmartVFD HVAC makes installation and commissioning easy for you and energy savings easy for your customers.

- Start-up Wizards—All you have to do is tell the VFD whether you have a pump or a fan, enter nominal motor information, and you are up and running
- Graphic Interface—The easy-to-use keypad and interface deliver menu-driven programming and monitoring for fast, uniform commissioning. It's also easy for the building owner or manager to learn and use, helping to reduce service calls. Plus, a manual is built into the keypad for easy access when needed
- Built-in Communications—With BACnet®, N2 and Modbus built in, your customers will enjoy a lower total installed cost and reliable communications with the building management system
- PC Software Wizards—Commissioning, programming and troubleshooting are all a snap thanks to these guided Startup and PID wizards
- Built-in PLC—Another reason why SmartVFD HVAC is a great value for your customer, the built-in PLC eliminates the need for an expensive external controller
- DC Choke for harmonic protection
- Standard RFI Filter—Ensures that EMC/RFI requirements are met
- Bypass Options—Meets specifications and system critical applications with a comprehensive bypass offering
- Real-Time Clock—Battery included
- Fire Mode for safe operation
- Motor Switch Ride-Through—easy, fault-free maintenance

Drive Family: SmartVFD HVAC
Acceleration time: 0.1 - 3000 sec
Deceleration time: .1 - 3000 sec
Analog Current Input: 0 (4) - 20 mA, 250 ohm differential
Analog Voltage Input: 0 - 10 Vdc, 200K ohm
Analog Current Output: 0 (4) - 20 mA, max 500 ohm
Digital Output: Open collector, max. load 48V/50mA
Continuous Output Current: overload 1.5 x High overload current (1min/10min); overload 1.1 x Low overload current (1min/10min)
Relay Output: Max. switching load: 250Vac/2A or 250Vdc/0,4A
Reference Output Voltage: Maximum Load 10mA

Auxiliary Voltage: ± 20%, max. load 50 mA
Starting Torque: Drive Input Disconnect: 510 x IN, 2 secs in every 20 sec period
Frequency (Hz): 0 Hz to 320 Hz
Operating Temperature: 14°F to 104°F (-10°C to 40°C), drives can be de-rated to operate up to 122°F (50°C)
Type of Enclosure: NEMA 1
Type of RFI Filter: EMC Filter
Configuration: Drive alone
Auto Bypass: No
Drive Input Disconnect: No

HVFDSD	VFD Compact Drive								**Product Family**
HVFDSB	SmartVFD BYPASS or DISC Only								
	3	Three Phase (3-in, 3-out)							**Input Phases**
		A	208/230V Drive Alone, 208 Vac Bypass						**Nominal Voltage**
		B	230 Vac Bypass						
		C	480 Vac						
		D	600 Vac						
			0007	0.75 HP					**Nominal Horsepower**
			0010	1 HP					
			0100	10 HP					
				T	Text Keypad				**Interface**
				G	Graphic Keypad				
					1	NEMA 1			**Enclosures**
					2	NEMA 12			
					3	NEMA 3R			
						0	Drive Only		**Contactors**
						1	Disconnect Only		
						2	Two Contactor Bypass		
						3	Three Contractor Bypass		
							0	Drive Only or no Special Options	**Options**
							1	Auto-Bypass	
HVFDSD	**3**	**C**	**0100**	**G**	**1**	**0**	**0**	Example	

SmartVFD HVAC

Material Number	Voltage	Horsepower	Frame Type	Enclosure	Current Ratings	Approximate, Dimensions in. (mm)	Weight lb (kg)
HVFDSD3A0007G100/U	208 Vac; 230 Vac	0.75 HP	4	NEMA 1	3.7A	5 x 12.9 x 7.5 (127 x 327.66 x 190.5)	13.2 (5.98)
HVFDSD3A0007G200/U	208 Vac; 230 Vac	0.75 HP	4	NEMA 12	3.7A	5 x 12.9 x 7.5 (127 x 327.66 x 190.5)	13.2 (5.98)
HVFDSD3A0007G300/U	208 Vac; 230 Vac	0.75 HP	4	NEMA 3R	3.7A	Contact Customer Care	Contact Customer Care
HVFDSD3A0010G100/U	208 Vac; 230 Vac	1 HP	4	NEMA 1	4.8A	5 x 12.9 x 7.5 (127 x 327.66 x 190.5)	13.2 (5.98)
HVFDSD3A0010G200/U	208 Vac; 230 Vac	1 HP	4	NEMA 12	4.8A	5 x 12.9 x 7.5 (127 x 327.66 x 190.5)	13.2 (5.98)
HVFDSD3A0010G300/U	208 Vac; 230 Vac	1 HP	4	NEMA 3R	4.8A	Contact Customer Care	Contact Customer Care
HVFDSD3A0015G100/U	208 Vac; 230 Vac	1.5 HP	4	NEMA 1	6.6A	5 x 12.9 x 7.5 (127 x 327.66 x 190.5)	13.2 (5.98)
HVFDSD3A0015G200/U	208 Vac; 230 Vac	1.5 HP	4	NEMA 12	6.6A	5 x 12.9 x 7.5 (127 x 327.66 x 190.5)	13.2 (5.98)
HVFDSD3A0015G300/U	208 Vac; 230 Vac	1.5 HP	4	NEMA 3R	6.6A	Contact Customer Care	Contact Customer Care
HVFDSD3A0020G100/U	208 Vac; 230 Vac	2 HP	4	NEMA 1	8A	5 x 12.9 x 7.5 (127 x 327.66 x 190.5)	13.2 (5.98)
HVFDSD3A0020G200/U	208 Vac; 230 Vac	2 HP	4	NEMA 12	8A	5 x 12.9 x 7.5 (127 x 327.66 x 190.5)	13.2 (5.98)
HVFDSD3A0020G300/U	208 Vac; 230 Vac	2 HP	4	NEMA 3R	8A	Contact Customer Care	Contact Customer Care
HVFDSD3A0030G100/U	208 Vac; 230 Vac	3 HP	4	NEMA 1	11A	5 x 12.9 x 7.5 (127 x 327.66 x 190.5)	13.2 (5.98)
HVFDSD3A0030G200/U	208 Vac; 230 Vac	3 HP	4	NEMA 12	11A	5 x 12.9 x 7.5 (127 x 327.66 x 190.5)	13.2 (5.98)
HVFDSD3A0030G300/U	208 Vac; 230 Vac	3 HP	4	NEMA 3R	11A	Contact Customer Care	Contact Customer Care
HVFDSD3A0050G100/U	208 Vac; 230 Vac	5 HP	5	NEMA 1	18A	5.7 x 16.5 x 8.4 (144.78 x 419.1 x 213.36)	22 (9.97)
HVFDSD3A0050G200/U	208 Vac; 230 Vac	5 HP	5	NEMA 12	18A	5.7 x 16.5 x 8.4 (144.78 x 419.1 x 213.36)	22 (9.97)
HVFDSD3A0050G300/U	208 Vac; 230 Vac	5 HP	5	NEMA 3R	18A	Contact Customer Care	Contact Customer Care
HVFDSD3A0075G100/U	208 Vac; 230 Vac	7.5 HP	5	NEMA 1	24A	5.7 x 16.5 x 8.4 (144.78 x 419.1 x 213.36)	22 (9.97)
HVFDSD3A0075G200/U	208 Vac; 230 Vac	7.5 HP	5	NEMA 12	24A	5.7 x 16.5 x 8.4 (144.78 x 419.1 x 213.36)	22 (9.97)
HVFDSD3A0075G300/U	208 Vac; 230 Vac	7.5 HP	5	NEMA 3R	24A	Contact Customer Care	Contact Customer Care
HVFDSD3A0100G100/U	208 Vac; 230 Vac	10 HP	5	NEMA 1	31A	5.7 x 16.5 x 8.4 (144.78 x 419.1 x 213.36)	22 (9.97)
HVFDSD3A0100G200/U	208 Vac; 230 Vac	10 HP	5	NEMA 12	31A	5.7 x 16.5 x 8.4 (144.78 x 419.1 x 213.36)	22 (9.97)
HVFDSD3A0100G300/U	208 Vac; 230 Vac	10 HP	5	NEMA 3R	31A	Contact Customer Care	Contact Customer Care
HVFDSD3A0150G100/U	208 Vac; 230 Vac	15 HP	6	NEMA 1	48A	7.7 x 21.9 x 9 (195.58 x 556.26 x 228.6)	44.1 (20)
HVFDSD3A0150G200/U	208 Vac; 230 Vac	15 HP	6	NEMA 12	48A	7.7 x 21.9 x 9 (195.58 x 556.26 x 228.6)	44.1 (20)
HVFDSD3A0150G300/U	208 Vac; 230 Vac	15 HP	6	NEMA 3R	48A	Contact Customer Care	Contact Customer Care
HVFDSD3A0200G100/U	208 Vac; 230 Vac	20 HP	6	NEMA 1	62A	7.7 x 21.9 x 9 (195.58 x 556.26 x 228.6)	44.1 (20)
HVFDSD3A0200G200/U	208 Vac; 230 Vac	20 HP	6	NEMA 12	62A	7.7 x 21.9 x 9 (195.58 x 556.26 x 228.6)	44.1 (20)
HVFDSD3A0200G300/U	208 Vac; 230 Vac	20 HP	6	NEMA 3R	62A	Contact Customer Care	Contact Customer Care
HVFDSD3A0250G100/U	208 Vac; 230 Vac	25 HP	7	NEMA 1	75A	9.3 x 26 x 10.2 (236.22 x 660.4 x 259.08)	82.7 (37.5)
HVFDSD3A0250G200/U	208 Vac; 230 Vac	25 HP	7	NEMA 12	75A	9.3 x 26 x 10.2 (236.22 x 660.4 x 259.08)	82.7 (37.5)
HVFDSD3A0250G300/U	208 Vac; 230 Vac	25 HP	7	NEMA 3R	75A	Contact Customer Care	Contact Customer Care
HVFDSD3A0300G100/U	208 Vac; 230 Vac	30 HP	7	NEMA 1	88A	9.3 x 26 x 10.2 (236.22 x 660.4 x 259.08)	82.7 (37.5)
HVFDSD3A0300G200/U	208 Vac; 230 Vac	30 HP	7	NEMA 12	88A	9.3 x 26 x 10.2 (236.22 x 660.4 x 259.08)	82.7 (37.5)
HVFDSD3A0300G300/U	208 Vac; 230 Vac	30 HP	7	NEMA 3R	88A	Contact Customer Care	Contact Customer Care
HVFDSD3A0400G100/U	208 Vac; 230 Vac	40 HP	7	NEMA 1	105A	9.3 x 26 x 10.2 (236.22 x 660.4 x 259.08)	Contact Customer Care
HVFDSD3A0400G200/U	208 Vac; 230 Vac	40 HP	7	NEMA 12	105A	9.3 x 26 x 10.2 (236.22 x 660.4 x 259.08)	Contact Customer Care
HVFDSD3A0400G300/U	208 Vac; 230 Vac	40 HP	7	NEMA 3R	105A	Contact Customer Care	Contact Customer Care
HVFDSD3A0500G100/U	208 Vac; 230 Vac	50 HP	8	NEMA 1	140A	11.4 x 38 x 13.5 (289.56 x 965.2 x 342.9)	154.3 (70.0)
HVFDSD3A0500G200/U	208 Vac; 230 Vac	50 HP	8	NEMA 12	140A	11.4 x 38 x 13.5 (289.56 x 965.2 x 342.9)	154.3 (70.0)
HVFDSD3A0500G300/U	208 Vac; 230 Vac	50 HP	8	NEMA 3R	140A	Contact Customer Care	Contact Customer Care
HVFDSD3A0600G100/U	208 Vac; 230 Vac	60 HP	8	NEMA 1	170A	11.4 x 38 x 13.5 (289.56 x 965.2 x 342.9)	154.3 (70.0)
HVFDSD3A0600G200/U	208 Vac; 230 Vac	60 HP	8	NEMA 12	170A	11.4 x 38 x 13.5 (289.56 x 965.2 x 342.9)	154.3 (70.0)
HVFDSD3A0600G300/U	208 Vac; 230 Vac	60 HP	8	NEMA 3R	170A	Contact Customer Care	Contact Customer Care
HVFDSD3A0750G100/U	208 Vac; 230 Vac	75 HP	8	NEMA 1	205A	11.4 x 38 x 13.5 (289.56 x 965.2 x 342.9)	154.3 (70.0)
HVFDSD3A0750G200/U	208 Vac; 230 Vac	75 HP	8	NEMA 12	205A	11.4 x 38 x 13.5 (289.56 x 965.2 x 342.9)	154.3 (70.0)
HVFDSD3A0750G300/U	208 Vac; 230 Vac	75 HP	8	NEMA 3R	205A	Contact Customer Care	Contact Customer Care
HVFDSD3A1000G100/U	208 Vac; 230 Vac	100 HP	9	NEMA 1	261A	18.9 x 45.3 x 14.4 (480 x 1150 x 366)	238.1 (108.0)
HVFDSD3A1000G200/U	208 Vac; 230 Vac	100 HP	9	NEMA 12	261A	18.9 x 45.3 x 14.4 (480 x 1150 x 366)	238.1 (108.0)
HVFDSD3A1250G100/U	208 Vac; 230 Vac	125 HP	9	NEMA 1	310A	18.9 x 45.3 x 14.4 (480 x 1150 x 366)	238.1 (108.0)
HVFDSD3A1250G200/U	208 Vac; 230 Vac	125 HP	9	NEMA 12	310A	18.9 x 45.3 x 14.4 (480 x 1150 x 366)	238.1 (108.0)
HVFDSD3C0015G100/U	460 Vac	1.5 HP	4	NEMA 1	3.4A	5 x 12.9 x 7.5 (127 x 327.66 x 190.5)	13.2 (5.98)
HVFDSD3C0015G200/U	460 Vac	1.5 HP	4	NEMA 12	3.4A	5 x 12.9 x 7.5 (127 x 327.66 x 190.5)	13.2 (5.98)
HVFDSD3C0015G300/U	460 Vac	1.5 HP	4	NEMA 3R	3.4A	Contact Customer Care	Contact Customer Care
HVFDSD3C0020G100/U	460 Vac	2 HP	4	NEMA 1	4.8A	5 x 12.9 x 7.5 (127 x 327.66 x 190.5)	13.2 (5.98)
HVFDSD3C0020G200/U	460 Vac	2 HP	4	NEMA 12	4.8A	5 x 12.9 x 7.5 (127 x 327.66 x 190.5)	13.2 (5.98)
HVFDSD3C0020G300/U	460 Vac	2 HP	4	NEMA 3R	4.8A	Contact Customer Care	Contact Customer Care
HVFDSD3C0030G100/U	460 Vac	3 HP	4	NEMA 1	5.6A	5 x 12.9 x 7.5 (127 x 327.66 x 190.5)	13.2 (5.98)
HVFDSD3C0030G200/U	460 Vac	3 HP	4	NEMA 12	5.6A	5 x 12.9 x 7.5 (127 x 327.66 x 190.5)	13.2 (5.98)
HVFDSD3C0030G300/U	460 Vac	3 HP	4	NEMA 3R	5.6A	Contact Customer Care	Contact Customer Care

Material Number	Voltage	Horsepower	Frame Type	Enclosure	Current Ratings	Approximate, Dimensions in. (mm)	Weight lb (kg)
HVFDSD3C0040G100/U	460 Vac	4 HP	4	NEMA 1	8A	5 x 12.9 x 7.5 (127 x 327.66 x 190.5)	Contact Customer Care
HVFDSD3C0040G200/U	460 Vac	4 HP	4	NEMA 12	8A	5 x 12.9 x 7.5 (127 x 327.66 x 190.5)	Contact Customer Care
HVFDSD3C0040G300/U	460 Vac	4 HP	4	NEMA 3R	8A	Contact Customer Care	Contact Customer Care
HVFDSD3C0050G100/U	460 Vac	5 HP	4	NEMA 1	9.6A	5 x 12.9 x 7.5 (127 x 327.66 x 190.5)	13.2 (5.98)
HVFDSD3C0050G200/U	460 Vac	5 HP	4	NEMA 12	9.6A	5 x 12.9 x 7.5 (127 x 327.66 x 190.5)	13.2 (5.98)
HVFDSD3C0050G300/U	460 Vac	5 HP	4	NEMA 3R	9.6A	Contact Customer Care	Contact Customer Care
HVFDSD3C0075G100/U	460 Vac	7.5 HP	4	NEMA 1	12A	5 x 12.9 x 7.5 (127 x 327.66 x 190.5)	13.2 (5.98)
HVFDSD3C0075G200/U	460 Vac	7.5 HP	4	NEMA 12	12A	5 x 12.9 x 7.5 (127 x 327.66 x 190.5)	13.2 (5.98)
HVFDSD3C0075G300/U	460 Vac	7.5 HP	4	NEMA 3R	12A	Contact Customer Care	Contact Customer Care
HVFDSD3C0100G100/U	460 Vac	10 HP	5	NEMA 1	16A	5.7 x 16.5 x 8.4 (144.78 x 419.1 x 213.36)	22 (9.97)
HVFDSD3C0100G200/U	460 Vac	10 HP	5	NEMA 12	16A	5.7 x 16.5 x 8.4 (144.78 x 419.1 x 213.36)	22
HVFDSD3C0100G300/U	460 Vac	10 HP	5	NEMA 3R	16A	Contact Customer Care	Contact Customer Care
HVFDSD3C0150G100/U	460 Vac	15 HP	5	NEMA 1	23A	5.7 x 16.5 x 8.4 (144.78 x 419.1 x 213.36)	22 (9.97)
HVFDSD3C0150G200/U	460 Vac	15 HP	5	NEMA 12	23A	5.7 x 16.5 x 8.4 (144.78 x 419.1 x 213.36)	22 (9.97)
HVFDSD3C0150G300/U	460 Vac	15 HP	5	NEMA 3R	23A	Contact Customer Care	Contact Customer Care
HVFDSD3C0200G100/U	460 Vac	20 HP	5	NEMA 1	31A	5.7 x 16.5 x 8.4 (144.78 x 419.1 x 213.36)	22 (9.97)
HVFDSD3C0200G200/U	460 Vac	20 HP	5	NEMA 12	31A	5.7 x 16.5 x 8.4 (144.78 x 419.1 x 213.36)	22 (9.97)
HVFDSD3C0200G300/U	460 Vac	20 HP	5	NEMA 3R	31A	Contact Customer Care	Contact Customer Care
HVFDSD3C0250G100/U	460 Vac	25 HP	6	NEMA 1	38A	7.7 x 21.9 x 9 (195.58 x 556.26 x 228.6)	44.1 (20)
HVFDSD3C0250G200/U	460 Vac	25 HP	6	NEMA 12	38A	7.7 x 21.9 x 9 (195.58 x 556.26 x 228.6)	44.1 (20)
HVFDSD3C0250G300/U	460 Vac	25 HP	6	NEMA 3R	38A	Contact Customer Care	Contact Customer Care
HVFDSD3C0300G100/U	460 Vac	30 HP	6	NEMA 1	46A	7.7 x 21.9 x 9 (195.58 x 556.26 x 228.6)	44.1 (20)
HVFDSD3C0300G200/U	460 Vac	30 HP	6	NEMA 12	46A	7.7 x 21.9 x 9 (195.58 x 556.26 x 228.6)	44.1 (20)
HVFDSD3C0300G300/U	460 Vac	30 HP	6	NEMA 3R	46A	Contact Customer Care	Contact Customer Care
HVFDSD3C0400G100/U	460 Vac	40 HP	6	NEMA 1	61A	7.7 x 21.9 x 9 (195.58 x 556.26 x 228.6)	44.1 (20)
HVFDSD3C0400G200/U	460 Vac	40 HP	6	NEMA 12	61A	7.7 x 21.9 x 9 (195.58 x 556.26 x 228.6)	44.1 (20)
HVFDSD3C0400G300/U	460 Vac	40 HP	6	NEMA 3R	61A	Contact Customer Care	Contact Customer Care
HVFDSD3C0500G100/U	460 Vac	50 HP	7	NEMA 1	72A	9.3 x 26 x 10.2 (236.22 x 660.4 x 259.08)	82.7 (37.5)
HVFDSD3C0500G200/U	460 Vac	50 HP	7	NEMA 12	72A	9.3 x 26 x 10.2 (236.22 x 660.4 x 259.08)	82.7 (37.5)
HVFDSD3C0500G300/U	460 Vac	50 HP	7	NEMA 3R	72A	Contact Customer Care	Contact Customer Care
HVFDSD3C0600G100/U	460 Vac	60 HP	7	NEMA 1	87A	9.3 x 26 x 10.2 (236.22 x 660.4 x 259.08)	82.7 (37.5)
HVFDSD3C0600G200/U	460 Vac	60 HP	7	NEMA 12	87A	9.3 x 26 x 10.2 (236.22 x 660.4 x 259.08)	82.7 (37.5)
HVFDSD3C0600G300/U	460 Vac	60 HP	7	NEMA 3R	87A	Contact Customer Care	Contact Customer Care
HVFDSD3C0750G100/U	460 Vac	75 HP	7	NEMA 1	105A	9.3 x 26 x 10.2 (236.22 x 660.4 x 259.08)	82.7 (37.5)
HVFDSD3C0750G200/U	460 Vac	75 HP	7	NEMA 12	105A	9.3 x 26 x 10.2 (236.22 x 660.4 x 259.08)	82.7 (37.5)
HVFDSD3C0750G300/U	460 Vac	75 HP	7	NEMA 3R	105A	Contact Customer Care	Contact Customer Care
HVFDSD3C1000G100/U	460 Vac	100 HP	8	NEMA 1	140A	11.4 x 38 x 13.5 (289.56 x 965.2 x 342.9)	154.3 (70.0)
HVFDSD3C1000G200/U	460 Vac	100 HP	8	NEMA 12	140A	11.4 x 38 x 13.5 (289.56 x 965.2 x 342.9)	154.3 (70.0)
HVFDSD3C1000G300/U	460 Vac	100 HP	8	NEMA 3R	140A	Contact Customer Care	Contact Customer Care
HVFDSD3C1250G100/U	460 Vac	125 HP	8	NEMA 1	170A	11.4 x 38 x 13.5 (289.56 x 965.2 x 342.9)	154.3 (70.0)
HVFDSD3C1250G200/U	460 Vac	125 HP	8	NEMA 12	170A	11.4 x 38 x 13.5 (289.56 x 965.2 x 342.9)	154.3 (70.0)
HVFDSD3C1250G300/U	460 Vac	125 HP	8	NEMA 3R	170A	Contact Customer Care	Contact Customer Care
HVFDSD3C1500G100/U	460 Vac	150 HP	8	NEMA 1	205A	11.4 x 38 x 13.5 (289.56 x 965.2 x 342.9)	154.3 (70.0)
HVFDSD3C1500G200/U	460 Vac	150 HP	8	NEMA 12	205A	11.4 x 38 x 13.5 (289.56 x 965.2 x 342.9)	154.3 (70.0)
HVFDSD3C1500G300/U	460 Vac	150 HP	8	NEMA 3R	205A	Contact Customer Care	Contact Customer Care
HVFDSD3C2000G100/U	460 Vac	200 HP	9	NEMA 1	261A	18.9 x 45.3 x 14.4 (480 x 1150 x 366)	238.1 (108.0)
HVFDSD3C2000G200/U	460 Vac	200 HP	9	NEMA 12	261A	18.9 x 45.3 x 14.4 (480 x 1150 x 366)	238.1 (108.0)
HVFDSD3C2500G100/U	460 Vac	250 HP	9	NEMA 1	310A	18.9 x 45.3 x 14.4 (480 x 1150 x 366)	238.1 (108.0)
HVFDSD3C2500G200/U	460 Vac	250 HP	9	NEMA 12	310A	18.9 x 45.3 x 14.4 (480 x 1150 x 366)	238.1 (108.0)

SmartVFD HVAC and SmartVFD BYPASS

The Honeywell SmartHVAC drives with disconnect and/or bypass are designed specifically for commercial buildings to deliver the energy savings that building owners and facility managers need. The SmartVFD HVAC makes installation and commissioning easy for you and energy savings easy for your customers.

- Start-up Wizards—All you have to do is tell the VFD whether you have a pump or a fan, enter nominal motor information, and you are up and running
- Graphic Interface—The easy-to-use keypad and interface deliver menu-driven programming and monitoring for fast, uniform commissioning. It's also easy for the building owner or manager to learn and use, helping to reduce service calls. Plus, a manual is built into the keypad for easy access when needed
- Built-in Communications—With BACnet®, N2 and Modbus built in, your customers will enjoy a lower total installed cost and reliable communications with the building management system
- PC Software Wizards—Commissioning, programming and troubleshooting are all a snap thanks to these guided Startup and PID wizards
- Built-in PLC—Another reason why SmartVFD HVAC is a great value for your customer, the built-in PLC eliminates the need for an expensive external controller
- DC Choke for harmonic protection
- Standard RFI Filter—Ensures that EMC/RFI requirements are met
- Bypass Options—Meets specifications and system critical applications with a comprehensive bypass offering
- Real-Time Clock—Battery included
- Fire Mode for safe operation
- Motor Switch Ride-Through—easy, fault-free maintenance

Drive Family: SmartVFD HVAC
Acceleration time: 0.1 - 3000 sec
Deceleration time: .1 - 3000 sec
Analog Current Input: 0 (4) - 20 mA, 250 ohm differential
Analog Voltage Input: 0 - 10 Vdc, 200K ohm
Analog Current Output: 0 (4) - 20 mA, max 500 ohm
Digital Output: Open collector, max. load 48V/50mA
Continuous Output Current: overload 1.5 x High overload current (1min/10min); overload 1.1 x Low overload current (1min/10min)

Relay Output: Max. switching load: 250Vac/2A or 250Vdc/0,4A
Reference Output Voltage: Maximum Load 10mA
Auxiliary Voltage: ± 20%, max. load 50 mA
Starting Torque: Drive Input Disconnect: 510 x IN, 2 secs in every 20 sec period
Frequency (Hz): 0 Hz to 320 Hz
Operating Temperature: 14°F to 104°F (-10°C to 40°C), drives can be de-rated to operate up to 122°F (50°C)
Type of RFI Filter: EMC Filter

HVFDSD	VFD Compact Drive								**Product Family**
HVFDSB	SmartVFD BYPASS or DISC Only								
	3	Three Phase (3-in, 3-out)							**Input Phases**
		A	208/230V Drive Alone, 208 Vac Bypass						**Nominal Voltage**
		B	230 Vac Bypass						
		C	480 Vac						
		D	600 Vac						
			0007	0.75 HP					**Nominal Horsepower**
			0010	1 HP					
			0100	10 HP					
				T	Text Keypad				**Interface**
				G	Graphic Keypad				
					1	NEMA 1			**Enclosures**
					2	NEMA 12			
					3	NEMA 3R			
						0	Drive Only		**Contactors**
						1	Disconnect Only		
						2	Two Contactor Bypass		
						3	Three Contractor Bypass		
							0	Drive Only or no Special Options	**Options**
							1	Auto-Bypass	

HVFDSD	**3**	**C**	**0100**	**G**	**1**	**0**	**0**	Example

SmartVFD HVAC and SmartVFD BYPASS

Material Number	Horsepower	Frame Type	Enclosure	Current Ratings	Drive Input Disconnect	Drive Input Fuses	Approximate, Dimensions in. (mm)	Weight lb (kg)
208 Vac — Drive with 2 contactor bypass								
HVFDSB3A0007G120/U	0.75 HP	4	NEMA 1	3.7A	No	No	8.9 x 31.9 x 9.6 (226.06 x 810.26 x 243.84)	38 (17.24)
HVFDSB3A0007G220/U	0.75 HP	4	NEMA 12	3.7A	No	No	16 x 37.5 x 11 (406.4 x 952.5 x 279.4)	55 (24.95)
HVFDSB3A0007G320/U	0.75 HP	4	NEMA 3R	3.7A	No	No	24.5 x 24 x 10.5 (622.3 x 609.6 x 266.7)	49 (22.23)
HVFDSB3A0010G120/U	1 HP	4	NEMA 1	4.8A	No	No	8.9 x 31.9 x 9.6 (226.06 x 810.26 x 243.84)	38 (17.24)
HVFDSB3A0010G220/U	1 HP	4	NEMA 12	4.8A	No	No	16 x 37.5 x 11 (406.4 x 952.5 x 279.4)	55 (24.95)
HVFDSB3A0010G320/U	1 HP	4	NEMA 3R	4.8A	No	No	24.5 x 24 x 10.5 (622.3 x 609.6 x 266.7)	49 (22.23)
HVFDSB3A0015G120/U	1.5 HP	4	NEMA 1	6.6A	No	No	8.9 x 31.9 x 9.6 (226.06 x 810.26 x 243.84)	38 (17.24)
HVFDSB3A0015G220/U	1.5 HP	4	NEMA 12	6.6A	No	No	16 x 37.5 x 11 (406.4 x 952.5 x 279.4)	55 (24.95)
HVFDSB3A0015G320/U	1.5 HP	4	NEMA 3R	6.6A	No	No	24.5 x 24 x 10.5 (622.3 x 609.6 x 266.7)	49 (22.23)
HVFDSB3A0020G120/U	2 HP	4	NEMA 1	8A	No	No	8.9 x 31.9 x 9.6 (226.06 x 810.26 x 243.84)	38 (17.24)
HVFDSB3A0020G220/U	2 HP	4	NEMA 12	8A	No	No	16 x 37.5 x 11 (406.4 x 952.5 x 279.4)	55 (24.95)
HVFDSB3A0020G320/U	2 HP	4	NEMA 3R	8A	No	No	24.5 x 24 x 10.5 (622.3 x 609.6 x 266.7)	49 (22.23)
HVFDSB3A0030G120/U	3 HP	4	NEMA 1	11A	No	No	8.9 x 31.9 x 9.6 (226.06 x 810.26 x 243.84)	38 (17.24)
HVFDSB3A0030G220/U	3 HP	4	NEMA 12	11A	No	No	16 x 37.5 x 11 (406.4 x 952.5 x 279.4)	55 (24.95)
HVFDSB3A0030G320/U	3 HP	4	NEMA 3R	11A	No	No	24.5 x 24 x 10.5 (622.3 x 609.6 x 266.7)	49 (22.23)
HVFDSB3A0050G120/U	5 HP	5	NEMA 1	18A	No	No	8.9 x 34.7 x 9.6 (226.06 x 881.38 x 243.84)	48 (21.77)
HVFDSB3A0050G220/U	5 HP	5	NEMA 12	18A	No	No	16 x 41 x 11 (406 x 1041.4 x 279.4)	70 (31.75)
HVFDSB3A0050G320/U	5 HP	5	NEMA 3R	18A	No	No	24.5 x 24 x 10.5 (622.3 x 609.6 x 266.7)	72 (32.66)
HVFDSB3A0075G120/U	7.5 HP	5	NEMA 1	24A	No	No	8.9 x 34.7 x 9.6 (226.06 x 881.38 x 243.84)	50 (22.68)
HVFDSB3A0075G220/U	7.5 HP	5	NEMA 12	24A	No	No	16 x 41 x 11 (406 x 1041.4 x 279.4)	70 (31.75)
HVFDSB3A0075G320/U	7.5 HP	5	NEMA 3R	24A	No	No	24.5 x 24 x 10.5 (622.3 x 609.6 x 266.7)	72 (32.66)
HVFDSB3A0100G120/U	10 HP	5	NEMA 1	31A	No	No	8.9 x 34.7 x 9.6 (226.06 x 881.38 x 243.84)	50 (22.68)
HVFDSB3A0100G220/U	10 HP	5	NEMA 12	31A	No	No	16 x 45 x 11 (406 x 1143 x 279.4)	84 (38.1)
HVFDSB3A0100G320/U	10 HP	5	NEMA 3R	31A	No	No	24.5 x 24 x 10.5 (622.3 x 609.6 x 266.7)	72 (32.66)
HVFDSB3A0150G120/U	15 HP	6	NEMA 1	48A	No	No	12.4 x 45 x 10.1 (314.96 x 1143 x 256.54)	55 (24.95)
HVFDSB3A0150G220/U	15 HP	6	NEMA 12	48A	No	No	16 x 50.5 x 13 (406.4 x 1282.7 x 256.54)	125 (56.7)
HVFDSB3A0150G320/U	15 HP	6	NEMA 3R	48A	No	No	28.5 x 36 x 10.5 (723.9 x 914.4 x 266.7)	118 (53.52)
HVFDSB3A0200G120/U	20 HP	6	NEMA 1	62A	No	No	12.4 x 45 x 10.1 (314.96 x 1143 x 256.54)	59 (26.76)
HVFDSB3A0200G220/U	20 HP	6	NEMA 12	62A	No	No	20 x 54.5 x 13 (508 x 1384.3 x 330.2)	140 (63.5)
HVFDSB3A0200G320/U	20 HP	6	NEMA 3R	62A	No	No	28.5 x 36 x 10.5 (723.9 x 914.4 x 266.7)	118 (53.52)
HVFDSB3A0250G120/U	25 HP	6	NEMA 1	75A	No	No	20.9 x 51.7 x 12.2 (530.86 x 1313.18 x 309.88)	169 (76.66)
HVFDSB3A0250G220/U	25 HP	6	NEMA 12	75A	No	No	20 x 58.5 x 13.5 (508 x 1485.9 x 342.9)	160 (72.57)
HVFDSB3A0250G320/U	25 HP	6	NEMA 3R	75A	No	No	28.5 x 48 x 12.5 (711.2 x 1219.2 x 317.5)	185 (83.91)
HVFDSB3A0300G120/U	30 HP	7	NEMA 1	88A	No	No	20.9 x 51.7 x 12.2 (530.86 x 1313.18 x 309.88)	179 (81.19)
HVFDSB3A0300G220/U	30 HP	7	NEMA 12	88A	No	No	24 x 65.5 x 13.5 (609 x 1663.7 x 342.9)	175 (79.38)
HVFDSB3A0300G320/U	30 HP	7	NEMA 3R	88A	No	No	28.5 x 48 x 12.5 (711.2 x 1219.2 x 317.5)	185 (83.91)
HVFDSB3A0400G120/U	40 HP	7	NEMA 1	105A	No	No	20.9 x 51.7 x 12.2 (530.86 x 1313.18 x 309.88)	189 (85.73)
HVFDSB3A0400G220/U	40 HP	7	NEMA 12	105A	No	No	30 x 70.5 x 13.5 (762 x 1790.7 x 342.9)	200 (90.72)
HVFDSB3A0400G320/U	40 HP	7	NEMA 3R	105A	No	No	28.5 x 48 x 12.5 (711.2 x 1219.2 x 317.5)	185 (83.91)
HVFDSB3A0500G120/U	50 HP	8	NEMA 1	140A	No	No	25 x 60 x 15.2 (635 x 1524 x 386.08)	250 (113.4)
HVFDSB3A0500G220/U	50 HP	8	NEMA 12	140A	No	No	40.5 x 60 x 12.5 (1028.7 x 1524 x 317.5)	Contact Customer Care
HVFDSB3A0500G320/U	50 HP	8	NEMA 3R	140A	No	No	60 x 41 x 14 (1524 x 1041 x 356)	185 (83.91)
HVFDSB3A0600G120/U	60 HP	8	NEMA 1	170A	No	No	25 x 60 x 15.2 (635 x 1524 x 386.08)	265 (120.2)
HVFDSB3A0600G220/U	60 HP	8	NEMA 12	170A	No	No	40.5 x 60 x 12.5 (1028.7 x 1524 x 317.5)	Contact Customer Care
HVFDSB3A0600G320/U	60 HP	8	NEMA 3R	170A	No	No	60 x 41 x 14 (1524 x 1041 x 356)	185 (83.91)
HVFDSB3A0750G120/U	75 HP	8	NEMA 1	205A	No	No	25 x 60 x 15.2 (635 x 1524 x 386.08)	280 (127.01)
HVFDSB3A0750G220/U	75 HP	8	NEMA 12	205A	No	No	40.5 x 60 x 12.5 (1028.7 x 1524 x 317.5)	Contact Customer Care
HVFDSB3A0750G320/U	75 HP	8	NEMA 3R	205A	No	No	60 x 41 x 14 (1524 x 1041 x 356)	185 (83.91)
208 Vac — Drive with 3 contactor bypass								
HVFDSB3A0007G130/U	0.75 HP	4	NEMA 1	3.7A	Yes	Yes	8.9 x 38.9 x 10.3 (226.06 x 988.06 x 261.62)	44 (19.96)
HVFDSB3A0007G230/U	0.75 HP	4	NEMA 12	3.7A	Yes	Yes	16 x 37.5 x 11 (406.4 x 952.5 x 279.4)	55 (24.95)
HVFDSB3A0007G330/U	0.75 HP	4	NEMA 3R	3.7A	Yes	Yes	24.5 x 24 x 12 (622.3 x 609.6 x 304.8)	54 (24.49)
HVFDSB3A0010G130/U	1 HP	4	NEMA 1	4.8A	Yes	Yes	8.9 x 38.9 x 10.3 (226.06 x 988.06 x 261.62)	44 (19.96)
HVFDSB3A0010G230/U	1 HP	4	NEMA 12	4.8A	Yes	Yes	16 x 37.5 x 11 (406.4 x 952.5 x 279.4)	55 (24.95)
HVFDSB3A0010G330/U	1 HP	4	NEMA 3R	4.8A	Yes	Yes	24.5 x 24 x 12 (622.3 x 609.6 x 304.8)	54 (24.49)
HVFDSB3A0015G130/U	1.5 HP	4	NEMA 1	6.6A	Yes	Yes	8.9 x 38.9 x 10.3 (226.06 x 988.06 x 261.62)	44 (19.96)
HVFDSB3A0015G230/U	1.5 HP	4	NEMA 12	6.6A	Yes	Yes	16 x 37.5 x 11 (406.4 x 952.5 x 279.4)	55 (24.95)
HVFDSB3A0015G330/U	1.5 HP	4	NEMA 3R	6.6A	Yes	Yes	24.5 x 24 x 12 (622.3 x 609.6 x 304.8)	54 (24.49)

Material Number	Horsepower	Frame Type	Enclosure	Current Ratings	Drive Input Disconnect	Drive Input Fuses	Approximate, Dimensions in. (mm)	Weight lb (kg)
HVFDSB3A0020G130/U	2 HP	4	NEMA 1	8A	Yes	Yes	8.9 x 38.9 x 10.3 (226.06 x 988.06 x 261.62)	44 (19.96)
HVFDSB3A0020G230/U	2 HP	4	NEMA 12	8A	Yes	Yes	16 x 37.5 x 11 (406.4 x 952.5 x 279.4)	55 (24.95)
HVFDSB3A0020G330/U	2 HP	4	NEMA 3R	8A	Yes	Yes	24.5 x 24 x 12 (622.3 x 609.6 x 304.8)	54 (24.49)
HVFDSB3A0030G130/U	3 HP	4	NEMA 1	11A	Yes	Yes	8.9 x 38.9 x 10.3 (226.06 x 988.06 x 261.62)	44 (19.96)
HVFDSB3A0030G230/U	3 HP	4	NEMA 12	11A	Yes	Yes	16 x 37.5 x 11 (406.4 x 952.5 x 279.4)	55 (24.95)
HVFDSB3A0030G330/U	3 HP	4	NEMA 3R	11A	Yes	Yes	24.5 x 24 x 12 (622.3 x 609.6 x 304.8)	54 (24.49)
HVFDSB3A0050G130/U	5 HP	5	NEMA 1	18A	Yes	Yes	8.9 x 41.7 x 10.3 (226.06 x 1059.1 x 261.62)	55 (24.95)
HVFDSB3A0050G230/U	5 HP	5	NEMA 12	18A	Yes	Yes	16 x 41 x 11 (406 x 1041.4 x 279.4)	70 (31.75)
HVFDSB3A0050G330/U	5 HP	5	NEMA 3R	18A	Yes	Yes	28.5 x 30 x 12 (723.9 x 762 x 304.8)	78 (35.38)
HVFDSB3A0075G130/U	7.5 HP	5	NEMA 1	24A	Yes	Yes	8.9 x 41.7 x 10.3 (226.06 x 1059.1 x 261.62)	57 (25.85)
HVFDSB3A0075G230/U	7.5 HP	5	NEMA 12	24A	Yes	Yes	16 x 41 x 11 (406 x 1041.4 x 279.4)	70 (31.75)
HVFDSB3A0075G330/U	7.5 HP	5	NEMA 3R	24A	Yes	Yes	28.5 x 30 x 12 (723.9 x 762 x 304.8)	78 (35.38)
HVFDSB3A0100G130/U	10 HP	5	NEMA 1	31A	Yes	Yes	8.9 x 41.7 x 10.8 (226.06 x 1059.1 x 274.32)	59.5 (26.99)
HVFDSB3A0100G230/U	10 HP	5	NEMA 12	31A	Yes	Yes	16 x 45 x 11 (406 x 1143 x 279.4)	84 (38.1)
HVFDSB3A0100G330/U	10 HP	5	NEMA 3R	31A	Yes	Yes	28.5 x 30 x 12 (723.9 x 762 x 304.8)	78 (35.38)
HVFDSB3A0150G130/U	15 HP	6	NEMA 1	48A	Yes	Yes	12.4 x 55 x 11.3 (314.96 x 1397 x 287.02)	94.5 (42.86)
HVFDSB3A0150G230/U	15 HP	6	NEMA 12	48A	Yes	Yes	16 x 50.5 x 13 (406.4 x 1282.7 x 256.54)	125 (56.7)
HVFDSB3A0150G330/U	15 HP	6	NEMA 3R	48A	Yes	Yes	34.5 x 36 x 12 (867.3 x 914.4 x 304.8)	124 (56.25)
HVFDSB3A0200G130/U	20 HP	6	NEMA 1	62A	Yes	Yes	12.4 x 55 x 11.3 (314.96 x 1397 x 287.02)	98.5 (44.68)
HVFDSB3A0200G230/U	20 HP	6	NEMA 12	62A	Yes	Yes	20 x 54.5 x 13 (508 x 1384.3 x 330.2)	140 (63.5)
HVFDSB3A0200G330/U	20 HP	6	NEMA 3R	62A	Yes	Yes	34.5 x 36 x 12 (867.3 x 914.4 x 304.8)	124 (56.25)
HVFDSB3A0250G130/U	25 HP	6	NEMA 1	75A	Yes	Yes	20.9 x 59 x 13.2 (530.86 x 1498.6 x 335.28)	175 (79.38)
HVFDSB3A0250G230/U	25 HP	6	NEMA 12	75A	Yes	Yes	20 x 58.5 x 13.5 (508 x 1485.9 x 342.9)	160 (72.57)
HVFDSB3A0250G330/U	25 HP	6	NEMA 3R	75A	Yes	Yes	28.5 x 48 x 14 (711.2 x 1219.2 x 355.6)	193 (87.54)
HVFDSB3A0300G130/U	30 HP	7	NEMA 1	88A	Yes	Yes	20.9 x 59 x 13.2 (530.86 x 1498.6 x 335.28)	184 (83.46)
HVFDSB3A0300G230/U	30 HP	7	NEMA 12	88A	Yes	Yes	24 x 65.5 x 13.5 (609 x 1663.7 x 342.9)	175 (79.38)
HVFDSB3A0300G330/U	30 HP	7	NEMA 3R	88A	Yes	Yes	28.5 x 48 x 14 (711.2 x 1219.2 x 355.6)	193 (87.54)
HVFDSB3A0400G130/U	40 HP	7	NEMA 1	105A	Yes	Yes	20.9 x 59 x 13.2 (530.86 x 1498.6 x 335.28)	195 (88.45)
HVFDSB3A0400G230/U	40 HP	7	NEMA 12	105A	Yes	Yes	30 x 70.5 x 13.5 (762 x 1790.7 x 342.9)	200 (90.72)
HVFDSB3A0400G330/U	40 HP	7	NEMA 3R	105A	Yes	Yes	28.5 x 48 x 14 (711.2 x 1219.2 x 355.6)	193 (87.54)
HVFDSB3A0500G130/U	50 HP	8	NEMA 1	140A	Yes	Yes	25 x 70 x 16.2 (635 x 1778 x 411.48)	285 (129.27)
HVFDSB3A0500G230/U	50 HP	8	NEMA 12	140A	Yes	Yes	40.5 x 60 x 14 (1028.7 x 1524 x 355.6)	Contact Customer Care
HVFDSB3A0500G330/U	50 HP	8	NEMA 3R	140A	Yes	Yes	60 x 41 x 14 (1524 x 1041 x 356)	193 (87.54)
HVFDSB3A0600G130/U	60 HP	8	NEMA 1	170A	Yes	Yes	25 x 70 x 16.2 (635 x 1778 x 411.48)	295 (133.81)
HVFDSB3A0600G230/U	60 HP	8	NEMA 12	170A	Yes	Yes	40.5 x 60 x 14 (1028.7 x 1524 x 355.6)	Contact Customer Care
HVFDSB3A0600G330/U	60 HP	8	NEMA 3R	170A	Yes	Yes	60 x 41 x 14 (1524 x 1041 x 356)	193 (87.54)
HVFDSB3A0750G130/U	75 HP	8	NEMA 1	205A	Yes	Yes	25 x 70 x 16.2 (635 x 1778 x 411.48)	331 (150.14)
HVFDSB3A0750G230/U	75 HP	8	NEMA 12	205A	Yes	Yes	40.5 x 60 x 14 (1028.7 x 1524 x 355.6)	Contact Customer Care
HVFDSB3A0750G330/U	75 HP	8	NEMA 3R	205A	Yes	Yes	60 x 41 x 14 (1524 x 1041 x 356)	193 (87.54)
208 Vac — Drive with 3 contactor bypass and Auto bypass								
HVFDSB3A0007G131/U	0.75 HP	4	NEMA 1	3.7A	Yes	Yes	8.9 x 38.9 x 10.3 (226.06 x 988.06 x 261.62)	46 (20.87)
HVFDSB3A0007G231/U	0.75 HP	4	NEMA 12	3.7A	Yes	Yes	16 x 37.5 x 11 (406.4 x 952.5 x 279.4)	55 (24.95)
HVFDSB3A0007G331/U	0.75 HP	4	NEMA 3R	3.7A	Yes	Yes	24.5 x 24 x 12 (622.3 x 609.6 x 304.8)	54 (24.49)
HVFDSB3A0010G131/U	1 HP	4	NEMA 1	4.8A	Yes	Yes	8.9 x 38.9 x 10.3 (226.06 x 988.06 x 261.62)	46 (20.87)
HVFDSB3A0010G231/U	1 HP	4	NEMA 12	4.8A	Yes	Yes	16 x 37.5 x 11 (406.4 x 952.5 x 279.4)	55 (24.95)
HVFDSB3A0010G331/U	1 HP	4	NEMA 3R	4.8A	Yes	Yes	24.5 x 24 x 12 (622.3 x 609.6 x 304.8)	54 (24.49)
HVFDSB3A0015G131/U	1.5 HP	4	NEMA 1	6.6A	Yes	Yes	8.9 x 38.9 x 10.3 (226.06 x 988.06 x 261.62)	46 (20.87)
HVFDSB3A0015G231/U	1.5 HP	4	NEMA 12	6.6A	Yes	Yes	16 x 37.5 x 11 (406.4 x 952.5 x 279.4)	55 (24.95)
HVFDSB3A0015G331/U	1.5 HP	4	NEMA 3R	6.6A	Yes	Yes	24.5 x 24 x 12 (622.3 x 609.6 x 304.8)	54 (24.49)
HVFDSB3A0020G131/U	2 HP	4	NEMA 1	8A	Yes	Yes	8.9 x 38.9 x 10.3 (226.06 x 988.06 x 261.62)	46 (20.87)
HVFDSB3A0020G231/U	2 HP	4	NEMA 12	8A	Yes	Yes	16 x 37.5 x 11 (406.4 x 952.5 x 279.4)	55 (24.95)
HVFDSB3A0020G331/U	2 HP	4	NEMA 3R	8A	Yes	Yes	24.5 x 24 x 12 (622.3 x 609.6 x 304.8)	54 (24.49)
HVFDSB3A0030G131/U	3 HP	4	NEMA 1	11A	Yes	Yes	8.9 x 38.9 x 10.3 (226.06 x 988.06 x 261.62)	46 (20.87)
HVFDSB3A0030G231/U	3 HP	4	NEMA 12	11A	Yes	Yes	16 x 37.5 x 11 (406.4 x 952.5 x 279.4)	55 (24.95)
HVFDSB3A0030G331/U	3 HP	4	NEMA 3R	11A	Yes	Yes	24.5 x 24 x 12 (622.3 x 609.6 x 304.8)	54 (24.49)
HVFDSB3A0050G131/U	5 HP	5	NEMA 1	18A	Yes	Yes	8.9 x 41.7 x 10.3 (226.06 x 1059.1 x 261.62)	56 (25.4)
HVFDSB3A0050G231/U	5 HP	5	NEMA 12	18A	Yes	Yes	16 x 41 x 11 (406 x 1041.4 x 279.4)	70 (31.75)
HVFDSB3A0050G331/U	5 HP	5	NEMA 3R	18A	Yes	Yes	28.5 x 30 x 12 (723.9 x 762 x 304.8)	78 (35.38)
HVFDSB3A0075G131/U	7.5 HP	5	NEMA 1	24A	Yes	Yes	8.9 x 41.7 x 10.3 (226.06 x 1059.1 x 261.62)	57.5 (26.08)
HVFDSB3A0075G231/U	7.5 HP	5	NEMA 12	24A	Yes	Yes	16 x 41 x 11 (406 x 1041.4 x 279.4)	70 (31.75)

Material Number	Horsepower	Frame Type	Enclosure	Current Ratings	Drive Input Disconnect	Drive Input Fuses	Approximate, Dimensions in. (mm)	Weight lb (kg)
HVFDSB3A0075G331/U	7.5 HP	5	NEMA 3R	24A	Yes	Yes	28.5 x 30 x 12 (723.9 x 762 x 304.8)	78 (35.38)
HVFDSB3A0100G131/U	10 HP	5	NEMA 1	31A	Yes	Yes	8.9 x 41.7 x 10.8 (226.06 x 1059.1 x 274.32)	60 (27.22)
HVFDSB3A0100G231/U	10 HP	5	NEMA 12	31A	Yes	Yes	16 x 45 x 11 (406 x 1143 x 279.4)	84 (38.1)
HVFDSB3A0100G331/U	10 HP	5	NEMA 3R	31A	Yes	Yes	28.5 x 30 x 12 (723.9 x 762 x 304.8)	78 (35.38)
HVFDSB3A0150G131/U	15 HP	6	NEMA 1	48A	Yes	Yes	12.4 x 55 x 11.3 (314.96 x 1397 x 287.02)	96.5 (43.77)
HVFDSB3A0150G231/U	15 HP	6	NEMA 12	48A	Yes	Yes	16 x 50.5 x 13 (406.4 x 1282.7 x 256.54)	125 (56.7)
HVFDSB3A0150G331/U	15 HP	6	NEMA 3R	48A	Yes	Yes	34.5 x 36 x 12 (867.3 x 914.4 x 304.8)	124 (56.25)
HVFDSB3A0200G131/U	20 HP	6	NEMA 1	62A	Yes	Yes	12.4 x 55 x 11.3 (314.96 x 1397 x 287.02)	100.5 (45.59)
HVFDSB3A0200G231/U	20 HP	6	NEMA 12	62A	Yes	Yes	20 x 54.5 x 13 (508 x 1384.3 x 330.2)	140 (63.5)
HVFDSB3A0200G331/U	20 HP	6	NEMA 3R	62A	Yes	Yes	34.5 x 36 x 12 (867.3 x 914.4 x 304.8)	124 (56.25)
HVFDSB3A0250G131/U	25 HP	6	NEMA 1	75A	Yes	Yes	20.9 x 59 x 13.2 (530.86 x 1498.6 x 335.28)	177 (80.29)
HVFDSB3A0250G231/U	25 HP	6	NEMA 12	75A	Yes	Yes	20 x 58.5 x 13.5 (508 x 1485.9 x 342.9)	160 (72.57)
HVFDSB3A0250G331/U	25 HP	6	NEMA 3R	75A	Yes	Yes	28.5 x 48 x 14 (711.2 x 1219.2 x 355.6)	193 (87.54)
HVFDSB3A0300G131/U	30 HP	7	NEMA 1	88A	Yes	Yes	20.9 x 59 x 13.2 (530.86 x 1498.6 x 335.28)	186 (84.37)
HVFDSB3A0300G231/U	30 HP	7	NEMA 12	88A	Yes	Yes	24 x 65.5 x 13.5 (609 x 1663.7 x 342.9)	175 (79.38)
HVFDSB3A0300G331/U	30 HP	7	NEMA 3R	88A	Yes	Yes	28.5 x 48 x 14 (711.2 x 1219.2 x 355.6)	193 (87.54)
HVFDSB3A0400G131/U	40 HP	7	NEMA 1	105A	Yes	Yes	20.9 x 59 x 13.2 (530.86 x 1498.6 x 335.28)	197 (89.36)
HVFDSB3A0400G231/U	40 HP	7	NEMA 12	105A	Yes	Yes	30 x 70.5 x 13.5 (762 x 1790.7 x 342.9)	200 (90.72)
HVFDSB3A0400G331/U	40 HP	7	NEMA 3R	105A	Yes	Yes	28.5 x 48 x 14 (711.2 x 1219.2 x 355.6)	193 (87.54)
HVFDSB3A0500G131/U	50 HP	8	NEMA 1	140A	Yes	Yes	25 x 70 x 16.2 (635 x 1778 x 411.48)	287 (130.18)
HVFDSB3A0500G231/U	50 HP	8	NEMA 12	140A	Yes	Yes	40.5 x 60 x 14 (1028.7 x 1524 x 355.6)	Contact Customer Care
HVFDSB3A0500G331/U	50 HP	8	NEMA 3R	140A	Yes	Yes	60 x 41 x 14 (1524 x 1041 x 356)	193 (87.54)
HVFDSB3A0600G131/U	60 HP	8	NEMA 1	170A	Yes	Yes	25 x 70 x 16.2 (635 x 1778 x 411.48)	297 (134.72)
HVFDSB3A0600G231/U	60 HP	8	NEMA 12	170A	Yes	Yes	40.5 x 60 x 14 (1028.7 x 1524 x 355.6)	Contact Customer Care
HVFDSB3A0600G331/U	60 HP	8	NEMA 3R	170A	Yes	Yes	60 x 41 x 14 (1524 x 1041 x 356)	193 (87.54)
HVFDSB3A0750G131/U	75 HP	8	NEMA 1	205A	Yes	Yes	25 x 70 x 16.2 (635 x 1778 x 411.48)	333 (151.05)
HVFDSB3A0750G231/U	75 HP	8	NEMA 12	205A	Yes	Yes	40.5 x 60 x 14 (1028.7 x 1524 x 355.6)	Contact Customer Care
HVFDSB3A0750G331/U	75 HP	8	NEMA 3R	205A	Yes	Yes	60 x 41 x 14 (1524 x 1041 x 356)	193 (87.54)
208 Vac — Drive with Fused Disconnect								
HVFDSB3A0007G110/U	0.75 HP	4	NEMA 1	3.7A	Yes	Yes	8.9 x 31.9 x 10.3 (226.06 x 810.26 x 261.62)	33 (14.97)
HVFDSB3A0007G210/U	0.75 HP	4	NEMA 12	3.7A	Yes	Yes	12 x 37.5 x 11 (304.8 x 952.5 x 279.4)	40 (18.14)
HVFDSB3A0007G310/U	0.75 HP	4	NEMA 3R	3.7A	Yes	Yes	20.5 x 20 x 12 (520.7 x 508 x 304.8)	43 (19.5)
HVFDSB3A0010G110/U	1 HP	4	NEMA 1	4.8A	Yes	Yes	8.9 x 31.9 x 10.3 (226.06 x 810.26 x 261.62)	33 (14.97)
HVFDSB3A0010G210/U	1 HP	4	NEMA 12	4.8A	Yes	Yes	12 x 37.5 x 11 (304.8 x 952.5 x 279.4)	40 (18.14)
HVFDSB3A0010G310/U	1 HP	4	NEMA 3R	4.8A	Yes	Yes	20.5 x 20 x 12 (520.7 x 508 x 304.8)	43 (19.5)
HVFDSB3A0015G110/U	1.5 HP	4	NEMA 1	6.6A	Yes	Yes	8.9 x 31.9 x 10.3 (226.06 x 810.26 x 261.62)	33 (14.97)
HVFDSB3A0015G210/U	1.5 HP	4	NEMA 12	6.6A	Yes	Yes	12 x 37.5 x 11 (304.8 x 952.5 x 279.4)	40 (18.14)
HVFDSB3A0015G310/U	1.5 HP	4	NEMA 3R	6.6A	Yes	Yes	20.5 x 20 x 12 (520.7 x 508 x 304.8)	43 (19.5)
HVFDSB3A0020G110/U	2 HP	4	NEMA 1	8A	Yes	Yes	8.9 x 31.9 x 10.3 (226.06 x 810.26 x 261.62)	33 (14.97)
HVFDSB3A0020G210/U	2 HP	4	NEMA 12	8A	Yes	Yes	12 x 37.5 x 11 (304.8 x 952.5 x 279.4)	40 (18.14)
HVFDSB3A0020G310/U	2 HP	4	NEMA 3R	8A	Yes	Yes	20.5 x 20 x 12 (520.7 x 508 x 304.8)	43 (19.5)
HVFDSB3A0030G110/U	3 HP	4	NEMA 1	11A	Yes	Yes	8.9 x 31.9 x 10.3 (226.06 x 810.26 x 261.62)	33 (14.97)
HVFDSB3A0030G210/U	3 HP	4	NEMA 12	11A	Yes	Yes	12 x 37.5 x 11 (304.8 x 952.5 x 279.4)	40 (18.14)
HVFDSB3A0030G310/U	3 HP	4	NEMA 3R	11A	Yes	Yes	20.5 x 20 x 12 (520.7 x 508 x 304.8)	43 (19.5)
HVFDSB3A0050G110/U	5 HP	5	NEMA 1	18A	Yes	Yes	8.9 x 34.7 x 10.3 (226.06 x 881.38 x 261.62)	43 (19.5)
HVFDSB3A0050G210/U	5 HP	5	NEMA 12	18A	Yes	Yes	12 x 41 x 11 (304.8 x 1041.4 x 279.4)	72 (32.66)
HVFDSB3A0050G310/U	5 HP	5	NEMA 3R	18A	Yes	Yes	20.5 x 24 x 12 (520.7 x 609.6 x 304.8)	61 (27.67)
HVFDSB3A0075G110/U	7.5 HP	5	NEMA 1	24A	Yes	Yes	8.9 x 34.7 x 10.3 (226.06 x 881.38 x 261.62)	43 (19.5)
HVFDSB3A0075G210/U	7.5 HP	5	NEMA 12	24A	Yes	Yes	12 x 41 x 11 (304.8 x 1041.4 x 279.4)	72 (32.66)
HVFDSB3A0075G310/U	7.5 HP	5	NEMA 3R	24A	Yes	Yes	20.5 x 24 x 12 (520.7 x 609.6 x 304.8)	61 (27.67)
HVFDSB3A0100G110/U	10 HP	5	NEMA 1	31A	Yes	Yes	8.9 x 34.7 x 10.3 (226.06 x 881.38 x 261.62)	43 (19.5)
HVFDSB3A0100G210/U	10 HP	5	NEMA 12	31A	Yes	Yes	12 x 41 x 11 (304.8 x 1041.4 x 279.4)	72 (32.66)
HVFDSB3A0100G310/U	10 HP	5	NEMA 3R	31A	Yes	Yes	20.5 x 24 x 12 (520.7 x 609.6 x 304.8)	61 (27.67)
HVFDSB3A0150G110/U	15 HP	6	NEMA 1	48A	Yes	Yes	12.4 x 45 x 11.3 (314.96 x 1143 x 287.02)	50 (22.68)
HVFDSB3A0150G210/U	15 HP	6	NEMA 12	48A	Yes	Yes	12 x 46.5 x 13 (304.8 x 1181.1 x 330.2)	120 (54.43)
HVFDSB3A0150G310/U	15 HP	6	NEMA 3R	48A	Yes	Yes	28.5 x 36 x 12 (723.9 x 914.4 x 304.8)	88 (39.92)
HVFDSB3A0200G110/U	20 HP	6	NEMA 1	62A	Yes	Yes	12.4 x 45 x 11.3 (314.96 x 1143 x 287.02)	50 (22.68)
HVFDSB3A0200G210/U	20 HP	6	NEMA 12	62A	Yes	Yes	12 x 46.5 x 13 (304.8 x 1181.1 x 330.2)	120 (54.43)
HVFDSB3A0200G310/U	20 HP	6	NEMA 3R	62A	Yes	Yes	28.5 x 36 x 12 (723.9 x 914.4 x 304.8)	88 (39.92)
HVFDSB3A0250G110/U	25 HP	6	NEMA 1	75A	Yes	Yes	20.8 x 51.5 x 13.2 (528.32 x 1308.1 x 335.28)	100 (45.36)

Material Number	Horsepower	Frame Type	Enclosure	Current Ratings	Drive Input Disconnect	Drive Input Fuses	Approximate, Dimensions in. (mm)	Weight lb (kg)
HVFDSB3A0250G210/U	25 HP	6	NEMA 12	75A	Yes	Yes	16 x 50.5 x 13.5 (406.4 x 1282.7 x 342.9)	145 (65.77)
HVFDSB3A0250G310/U	25 HP	6	NEMA 3R	75A	Yes	Yes	28.5 x 48 x 14 (711.2 x 1219.2 x 355.6)	149 (67.59)
HVFDSB3A0300G110/U	30 HP	7	NEMA 1	88A	Yes	Yes	20.8 x 51.5 x 13.2 (528.32 x 1308.1 x 335.28)	100 (45.36)
HVFDSB3A0300G210/U	30 HP	7	NEMA 12	88A	Yes	Yes	16 x 50.5 x 13.5 (406.4 x 1282.7 x 342.9)	160 (72.57)
HVFDSB3A0300G310/U	30 HP	7	NEMA 3R	88A	Yes	Yes	28.5 x 48 x 14 (711.2 x 1219.2 x 355.6)	149 (67.59)
HVFDSB3A0400G110/U	40 HP	7	NEMA 1	105A	Yes	Yes	20.8 x 51.5 x 13.2 (528.32 x 1308.1 x 335.28)	100 (45.36)
HVFDSB3A0400G210/U	40 HP	7	NEMA 12	105A	Yes	Yes	16 x 50.5 x 13.5 (406.4 x 1282.7 x 342.9)	175 (79.38)
HVFDSB3A0400G310/U	40 HP	7	NEMA 3R	105A	Yes	Yes	28.5 x 48 x 14 (711.2 x 1219.2 x 355.6)	149 (67.59)
HVFDSB3A0500G110/U	50 HP	8	NEMA 1	140A	Yes	Yes	25 x 60 x 16.2 (635 x 1524 x 411.48)	200 (90.72)
HVFDSB3A0500G210/U	50 HP	8	NEMA 12	140A	Yes	Yes	40.5 x 60 x 14 (1028.7 x 1524 x 355.6)	Contact Customer Care
HVFDSB3A0500G310/U	50 HP	8	NEMA 3R	140A	Yes	Yes	48 x 36 x 16 (1219 x 914 x 406)	149 (67.59)
HVFDSB3A0600G110/U	60 HP	8	NEMA 1	170A	Yes	Yes	25 x 60 x 16.2 (635 x 1524 x 411.48)	200 (90.72)
HVFDSB3A0600G210/U	60 HP	8	NEMA 12	170A	Yes	Yes	40.5 x 60 x 14 (1028.7 x 1524 x 355.6)	Contact Customer Care
HVFDSB3A0600G310/U	60 HP	8	NEMA 3R	170A	Yes	Yes	48 x 36 x 16 (1219 x 914 x 406)	149 (67.59)
HVFDSB3A0750G110/U	75 HP	8	NEMA 1	205A	Yes	Yes	25 x 60 x 16.2 (635 x 1524 x 411.48)	200 (90.72)
HVFDSB3A0750G210/U	75 HP	8	NEMA 12	205A	Yes	Yes	40.5 x 60 x 14 (1028.7 x 1524 x 355.6)	Contact Customer Care
HVFDSB3A0750G310/U	75 HP	8	NEMA 3R	205A	Yes	Yes	48 x 36 x 16 (1219 x 914 x 406)	149 (67.59)
230 Vac — Drive with 2 contactor bypass								
HVFDSB3B0007G120/U	0.75 HP	4	NEMA 1	3.7A	No	No	8.9 x 31.9 x 9.6 (226.06 x 810.26 x 243.84)	38 (17.24)
HVFDSB3B0007G220/U	0.75 HP	4	NEMA 12	3.7A	No	No	16 x 37.5 x 11 (406.4 x 952.5 x 279.4)	55 (24.95)
HVFDSB3B0007G320/U	0.75 HP	4	NEMA 3R	3.7A	No	No	24.5 x 24 x 10.5 (622.3 x 609.6 x 266.7)	49 (22.23)
HVFDSB3B0010G120/U	1 HP	4	NEMA 1	4.8A	No	No	8.9 x 31.9 x 9.6 (226.06 x 810.26 x 243.84)	38 (17.24)
HVFDSB3B0010G220/U	1 HP	4	NEMA 12	4.8A	No	No	16 x 37.5 x 11 (406.4 x 952.5 x 279.4)	55 (24.95)
HVFDSB3B0010G320/U	1 HP	4	NEMA 3R	4.8A	No	No	24.5 x 24 x 10.5 (622.3 x 609.6 x 266.7)	49 (22.23)
HVFDSB3B0015G120/U	1.5 HP	4	NEMA 1	6.6A	No	No	8.9 x 31.9 x 9.6 (226.06 x 810.26 x 243.84)	38 (17.24)
HVFDSB3B0015G220/U	1.5 HP	4	NEMA 12	6.6A	No	No	16 x 37.5 x 11 (406.4 x 952.5 x 279.4)	55 (24.95)
HVFDSB3B0015G320/U	1.5 HP	4	NEMA 3R	6.6A	No	No	24.5 x 24 x 10.5 (622.3 x 609.6 x 266.7)	49 (22.23)
HVFDSB3B0020G120/U	2 HP	4	NEMA 1	8A	No	No	8.9 x 31.9 x 9.6 (226.06 x 810.26 x 243.84)	38 (17.24)
HVFDSB3B0020G220/U	2 HP	4	NEMA 12	8A	No	No	16 x 37.5 x 11 (406.4 x 952.5 x 279.4)	55 (24.95)
HVFDSB3B0020G320/U	2 HP	4	NEMA 3R	8A	No	No	24.5 x 24 x 10.5 (622.3 x 609.6 x 266.7)	49 (22.23)
HVFDSB3B0030G120/U	3 HP	4	NEMA 1	11A	No	No	8.9 x 31.9 x 9.6 (226.06 x 810.26 x 243.84)	38 (17.24)
HVFDSB3B0030G220/U	3 HP	4	NEMA 12	11A	No	No	16 x 37.5 x 11 (406.4 x 952.5 x 279.4)	55 (24.95)
HVFDSB3B0030G320/U	3 HP	4	NEMA 3R	11A	No	No	24.5 x 24 x 10.5 (622.3 x 609.6 x 266.7)	49 (22.23)
HVFDSB3B0050G120/U	5 HP	5	NEMA 1	18A	No	No	8.9 x 34.7 x 9.6 (226.06 x 881.38 x 243.84)	48 (21.77)
HVFDSB3B0050G220/U	5 HP	5	NEMA 12	18A	No	No	16 x 41 x 11 (406 x 1041.4 x 279.4)	70 (31.75)
HVFDSB3B0050G320/U	5 HP	5	NEMA 3R	18A	No	No	24.5 x 24 x 10.5 (622.3 x 609.6 x 266.7)	72 (32.66)
HVFDSB3B0075G120/U	7.5 HP	5	NEMA 1	24A	No	No	8.9 x 34.7 x 9.6 (226.06 x 881.38 x 243.84)	50 (22.68)
HVFDSB3B0075G220/U	7.5 HP	5	NEMA 12	24A	No	No	16 x 41 x 11 (406 x 1041.4 x 279.4)	70 (31.75)
HVFDSB3B0075G320/U	7.5 HP	5	NEMA 3R	24A	No	No	24.5 x 24 x 10.5 (622.3 x 609.6 x 266.7)	72 (32.66)
HVFDSB3B0100G120/U	10 HP	5	NEMA 1	31A	No	No	8.9 x 34.7 x 9.6 (226.06 x 881.38 x 243.84)	50 (22.68)
HVFDSB3B0100G220/U	10 HP	5	NEMA 12	31A	No	No	16 x 45 x 11 (406 x 1143 x 279.4)	84 (38.1)
HVFDSB3B0100G320/U	10 HP	5	NEMA 3R	31A	No	No	24.5 x 24 x 10.5 (622.3 x 609.6 x 266.7)	72 (32.66)
HVFDSB3B0150G120/U	15 HP	6	NEMA 1	48A	No	No	12.4 x 45 x 10.1 (314.96 x 1143 x 256.54)	55 (24.95)
HVFDSB3B0150G220/U	15 HP	6	NEMA 12	48A	No	No	16 x 50.5 x 13 (406.4 x 1282.7 x 256.54)	125 (56.7)
HVFDSB3B0150G320/U	15 HP	6	NEMA 3R	48A	No	No	28.5 x 36 x 10.5 (723.9 x 914.4 x 266.7)	118 (53.52)
HVFDSB3B0200G120/U	20 HP	6	NEMA 1	62A	No	No	12.4 x 45 x 10.1 (314.96 x 1143 x 256.54)	59 (26.76)
HVFDSB3B0200G220/U	20 HP	6	NEMA 12	62A	No	No	20 x 54.5 x 13 (508 x 1384.3 x 330.2)	140 (63.5)
HVFDSB3B0200G320/U	20 HP	6	NEMA 3R	62A	No	No	28.5 x 36 x 10.5 (723.9 x 914.4 x 266.7)	118 (53.52)
HVFDSB3B0250G120/U	25 HP	6	NEMA 1	75A	No	No	20.9 x 51.7 x 12.2 (530.86 x 1313.18 x 309.88)	169 (76.66)
HVFDSB3B0250G220/U	25 HP	6	NEMA 12	75A	No	No	20 x 58.5 x 13.5 (508 x 1485.9 x 342.9)	160 (72.57)
HVFDSB3B0250G320/U	25 HP	6	NEMA 3R	75A	No	No	28.5 x 48 x 12.5 (711.2 x 1219.2 x 317.5)	185 (83.91)
HVFDSB3B0300G120/U	30 HP	7	NEMA 1	88A	No	No	20.9 x 51.7 x 12.2 (530.86 x 1313.18 x 309.88)	179 (81.19)
HVFDSB3B0300G220/U	30 HP	7	NEMA 12	88A	No	No	24 x 65.5 x 13.5 (609 x 1663.7 x 342.9)	175 (79.38)
HVFDSB3B0300G320/U	30 HP	7	NEMA 3R	88A	No	No	28.5 x 48 x 12.5 (711.2 x 1219.2 x 317.5)	185 (83.91)
HVFDSB3B0400G120/U	40 HP	7	NEMA 1	105A	No	No	20.9 x 51.7 x 12.2 (530.86 x 1313.18 x 309.88)	189 (85.73)
HVFDSB3B0400G220/U	40 HP	7	NEMA 12	105A	No	No	30 x 70.5 x 13.5 (762 x 1790.7 x 342.9)	200 (90.72)
HVFDSB3B0400G320/U	40 HP	7	NEMA 3R	105A	No	No	28.5 x 48 x 12.5 (711.2 x 1219.2 x 317.5)	185 (83.91)
HVFDSB3B0500G120/U	50 HP	8	NEMA 1	140A	No	No	25 x 60 x 15.2 (635 x 1524 x 386.08)	250 (113.4)
HVFDSB3B0500G220/U	50 HP	8	NEMA 12	140A	No	No	40.5 x 60 x 12.5 (1028.7 x 1524 x 317.5)	Contact Customer Care
HVFDSB3B0500G320/U	50 HP	8	NEMA 3R	140A	No	No	60 x 41 x 14 (1524 x 1041 x 356)	185 (83.91)

Material Number	Horsepower	Frame Type	Enclosure	Current Ratings	Drive Input Disconnect	Drive Input Fuses	Approximate, Dimensions in. (mm)	Weight lb (kg)
HVFDSB3B0600G120/U	60 HP	8	NEMA 1	170A	No	No	25 x 60 x 15.2 (635 x 1524 x 386.08)	265 (120.2)
HVFDSB3B0600G220/U	60 HP	8	NEMA 12	170A	No	No	40.5 x 60 x 12.5 (1028.7 x 1524 x 317.5)	Contact Customer Care
HVFDSB3B0600G320/U	60 HP	8	NEMA 3R	170A	No	No	60 x 41 x 14 (1524 x 1041 x 356)	185 (83.91)
HVFDSB3B0750G120/U	75 HP	8	NEMA 1	205A	No	No	25 x 60 x 15.2 (635 x 1524 x 386.08)	280 (127.01)
HVFDSB3B0750G220/U	75 HP	8	NEMA 12	205A	No	No	40.5 x 60 x 12.5 (1028.7 x 1524 x 317.5)	Contact Customer Care
HVFDSB3B0750G320/U	75 HP	8	NEMA 3R	205A	No	No	60 x 41 x 14 (1524 x 1041 x 356)	185 (83.91)
230 Vac — Drive with 3 contactor bypass								
HVFDSB3B0007G130/U	0.75 HP	4	NEMA 1	3.7A	Yes	Yes	8.9 x 38.9 x 10.3 (226.06 x 988.06 x 261.62)	44 (19.96)
HVFDSB3B0007G230/U	0.75 HP	4	NEMA 12	3.7A	Yes	Yes	16 x 37.5 x 11 (406.4 x 952.5 x 279.4)	55 (24.95)
HVFDSB3B0007G330/U	0.75 HP	4	NEMA 3R	3.7A	Yes	Yes	24.5 x 24 x 12 (622.3 x 609.6 x 304.8)	54 (24.49)
HVFDSB3B0010G130/U	1 HP	4	NEMA 1	4.8A	Yes	Yes	8.9 x 38.9 x 10.3 (226.06 x 988.06 x 261.62)	44 (19.96)
HVFDSB3B0010G230/U	1 HP	4	NEMA 12	4.8A	Yes	Yes	16 x 37.5 x 11 (406.4 x 952.5 x 279.4)	55 (24.95)
HVFDSB3B0010G330/U	1 HP	4	NEMA 3R	4.8A	Yes	Yes	24.5 x 24 x 12 (622.3 x 609.6 x 304.8)	54 (24.49)
HVFDSB3B0015G130/U	1.5 HP	4	NEMA 1	6.6A	Yes	Yes	8.9 x 38.9 x 10.3 (226.06 x 988.06 x 261.62)	44 (19.96)
HVFDSB3B0015G230/U	1.5 HP	4	NEMA 12	6.6A	Yes	Yes	16 x 37.5 x 11 (406.4 x 952.5 x 279.4)	55 (24.95)
HVFDSB3B0015G330/U	1.5 HP	4	NEMA 3R	6.6A	Yes	Yes	24.5 x 24 x 12 (622.3 x 609.6 x 304.8)	54 (24.49)
HVFDSB3B0020G130/U	2 HP	4	NEMA 1	8A	Yes	Yes	8.9 x 38.9 x 10.3 (226.06 x 988.06 x 261.62)	44 (19.96)
HVFDSB3B0020G230/U	2 HP	4	NEMA 12	8A	Yes	Yes	16 x 37.5 x 11 (406.4 x 952.5 x 279.4)	55 (24.95)
HVFDSB3B0020G330/U	2 HP	4	NEMA 3R	8A	Yes	Yes	24.5 x 24 x 12 (622.3 x 609.6 x 304.8)	54 (24.49)
HVFDSB3B0030G130/U	3 HP	4	NEMA 1	11A	Yes	Yes	8.9 x 38.9 x 10.3 (226.06 x 988.06 x 261.62)	44 (19.96)
HVFDSB3B0030G230/U	3 HP	4	NEMA 12	11A	Yes	Yes	16 x 37.5 x 11 (406.4 x 952.5 x 279.4)	55 (24.95)
HVFDSB3B0030G330/U	3 HP	4	NEMA 3R	11A	Yes	Yes	24.5 x 24 x 12 (622.3 x 609.6 x 304.8)	54 (24.49)
HVFDSB3B0050G130/U	5 HP	5	NEMA 1	18A	Yes	Yes	8.9 x 41.7 x 10.3 (226.06 x 1059.1 x 261.62)	55 (24.95)
HVFDSB3B0050G230/U	5 HP	5	NEMA 12	18A	Yes	Yes	16 x 41 x 11 (406 x 1041.4 x 279.4)	70 (31.75)
HVFDSB3B0050G330/U	5 HP	5	NEMA 3R	18A	Yes	Yes	28.5 x 30 x 12 (723.9 x 762 x 304.8)	78 (35.38)
HVFDSB3B0075G130/U	7.5 HP	5	NEMA 1	24A	Yes	Yes	8.9 x 41.7 x 10.3 (226.06 x 1059.1 x 261.62)	57 (25.85)
HVFDSB3B0075G230/U	7.5 HP	5	NEMA 12	24A	Yes	Yes	16 x 41 x 11 (406 x 1041.4 x 279.4)	70 (31.75)
HVFDSB3B0075G330/U	7.5 HP	5	NEMA 3R	24A	Yes	Yes	28.5 x 30 x 12 (723.9 x 762 x 304.8)	78 (35.38)
HVFDSB3B0100G130/U	10 HP	5	NEMA 1	31A	Yes	Yes	8.9 x 41.7 x 10.8 (226.06 x 1059.1 x 274.32)	59.5 (26.99)
HVFDSB3B0100G230/U	10 HP	5	NEMA 12	31A	Yes	Yes	16 x 45 x 11 (406 x 1143 x 279.4)	84 (38.1)
HVFDSB3B0100G330/U	10 HP	5	NEMA 3R	31A	Yes	Yes	28.5 x 30 x 12 (723.9 x 762 x 304.8)	78 (35.38)
HVFDSB3B0150G130/U	15 HP	6	NEMA 1	48A	Yes	Yes	12.4 x 55 x 11.3 (314.96 x 1397 x 287.02)	94.5 (42.86)
HVFDSB3B0150G230/U	15 HP	6	NEMA 12	48A	Yes	Yes	16 x 50.5 x 13 (406.4 x 1282.7 x 256.54)	125 (56.7)
HVFDSB3B0150G330/U	15 HP	6	NEMA 3R	48A	Yes	Yes	34.5 x 36 x 12 (867.3 x 914.4 x 304.8)	124 (56.25)
HVFDSB3B0200G130/U	20 HP	6	NEMA 1	62A	Yes	Yes	12.4 x 55 x 11.3 (314.96 x 1397 x 287.02)	98.5 (44.68)
HVFDSB3B0200G230/U	20 HP	6	NEMA 12	62A	Yes	Yes	20 x 54.5 x 13 (508 x 1384.3 x 330.2)	140 (63.5)
HVFDSB3B0200G330/U	20 HP	6	NEMA 3R	62A	Yes	Yes	34.5 x 36 x 12 (867.3 x 914.4 x 304.8)	124 (56.25)
HVFDSB3B0250G130/U	25 HP	6	NEMA 1	75A	Yes	Yes	20.9 x 59 x 13.2 (530.86 x 1498.6 x 335.28)	175 (79.38)
HVFDSB3B0250G230/U	25 HP	6	NEMA 12	75A	Yes	Yes	20 x 58.5 x 13.5 (508 x 1485.9 x 342.9)	160 (72.57)
HVFDSB3B0250G330/U	25 HP	6	NEMA 3R	75A	Yes	Yes	28.5 x 48 x 14 (711.2 x 1219.2 x 355.6)	193 (87.54)
HVFDSB3B0300G130/U	30 HP	7	NEMA 1	88A	Yes	Yes	20.9 x 59 x 13.2 (530.86 x 1498.6 x 335.28)	184 (83.46)
HVFDSB3B0300G230/U	30 HP	7	NEMA 12	88A	Yes	Yes	24 x 65.5 x 13.5 (609 x 1663.7 x 342.9)	175 (79.38)
HVFDSB3B0300G330/U	30 HP	7	NEMA 3R	88A	Yes	Yes	28.5 x 48 x 14 (711.2 x 1219.2 x 355.6)	193 (87.54)
HVFDSB3B0400G130/U	40 HP	7	NEMA 1	105A	Yes	Yes	20.9 x 59 x 13.2 (530.86 x 1498.6 x 335.28)	195 (88.45)
HVFDSB3B0400G230/U	40 HP	7	NEMA 12	105A	Yes	Yes	30 x 70.5 x 13.5 (762 x 1790.7 x 342.9)	200 (90.72)
HVFDSB3B0400G330/U	40 HP	7	NEMA 3R	105A	Yes	Yes	28.5 x 48 x 14 (711.2 x 1219.2 x 355.6)	193 (87.54)
HVFDSB3B0500G130/U	50 HP	8	NEMA 1	140A	Yes	Yes	25 x 70 x 16.2 (635 x 1778 x 411.48)	285 (129.27)
HVFDSB3B0500G230/U	50 HP	8	NEMA 12	140A	Yes	Yes	40.5 x 60 x 14 (1028.7 x 1524 x 355.6)	Contact Customer Care
HVFDSB3B0500G330/U	50 HP	8	NEMA 3R	140A	Yes	Yes	60 x 41 x 14 (1524 x 1041 x 356)	193 (87.54)
HVFDSB3B0600G130/U	60 HP	8	NEMA 1	170A	Yes	Yes	25 x 70 x 16.2 (635 x 1778 x 411.48)	295 (133.81)
HVFDSB3B0600G230/U	60 HP	8	NEMA 12	170A	Yes	Yes	40.5 x 60 x 14 (1028.7 x 1524 x 355.6)	Contact Customer Care
HVFDSB3B0600G330/U	60 HP	8	NEMA 3R	170A	Yes	Yes	60 x 41 x 14 (1524 x 1041 x 356)	193 (87.54)
HVFDSB3B0750G130/U	75 HP	8	NEMA 1	205A	Yes	Yes	25 x 70 x 16.2 (635 x 1778 x 411.48)	331 (150.14)
HVFDSB3B0750G230/U	75 HP	8	NEMA 12	205A	Yes	Yes	40.5 x 60 x 14 (1028.7 x 1524 x 355.6)	Contact Customer Care
HVFDSB3B0750G330/U	75 HP	8	NEMA 3R	205A	Yes	Yes	60 x 41 x 14 (1524 x 1041 x 356)	Contact Customer Care
230 Vac — Drive with 3 contactor bypass and Auto bypass								
HVFDSB3B0007G131/U	0.75 HP	4	NEMA 1	3.7A	Yes	Yes	8.9 x 38.9 x 10.3 (226.06 x 988.06 x 261.62)	46 (20.87)
HVFDSB3B0007G231/U	0.75 HP	4	NEMA 12	3.7A	Yes	Yes	16 x 37.5 x 11 (406.4 x 952.5 x 279.4)	55 (24.95)

Material Number	Horsepower	Frame Type	Enclosure	Current Ratings	Drive Input Disconnect	Drive Input Fuses	Approximate, Dimensions in. (mm)	Weight lb (kg)
HVFDSB3B0007G331/U	0.75 HP	4	NEMA 3R	3.7A	Yes	Yes	24.5 x 24 x 12 (622.3 x 609.6 x 304.8)	54 (24.49)
HVFDSB3B0010G131/U	1 HP	4	NEMA 1	4.8A	Yes	Yes	8.9 x 38.9 x 10.3 (226.06 x 988.06 x 261.62)	46 (20.87)
HVFDSB3B0010G231/U	1 HP	4	NEMA 12	4.8A	Yes	Yes	16 x 37.5 x 11 (406.4 x 952.5 x 279.4)	55 (24.95)
HVFDSB3B0010G331/U	1 HP	4	NEMA 3R	4.8A	Yes	Yes	24.5 x 24 x 12 (622.3 x 609.6 x 304.8)	54 (24.49)
HVFDSB3B0015G131/U	1.5 HP	4	NEMA 1	6.6A	Yes	Yes	8.9 x 38.9 x 10.3 (226.06 x 988.06 x 261.62)	46 (20.87)
HVFDSB3B0015G231/U	1.5 HP	4	NEMA 12	6.6A	Yes	Yes	16 x 37.5 x 11 (406.4 x 952.5 x 279.4)	55 (24.95)
HVFDSB3B0015G331/U	1.5 HP	4	NEMA 3R	6.6A	Yes	Yes	24.5 x 24 x 12 (622.3 x 609.6 x 304.8)	54 (24.49)
HVFDSB3B0020G131/U	2 HP	4	NEMA 1	8A	Yes	Yes	8.9 x 38.9 x 10.3 (226.06 x 988.06 x 261.62)	46 (20.87)
HVFDSB3B0020G231/U	2 HP	4	NEMA 12	8A	Yes	Yes	16 x 37.5 x 11 (406.4 x 952.5 x 279.4)	55 (24.95)
HVFDSB3B0020G331/U	2 HP	4	NEMA 3R	8A	Yes	Yes	24.5 x 24 x 12 (622.3 x 609.6 x 304.8)	54 (24.49)
HVFDSB3B0030G131/U	3 HP	4	NEMA 1	11A	Yes	Yes	8.9 x 38.9 x 10.3 (226.06 x 988.06 x 261.62)	46 (20.87)
HVFDSB3B0030G231/U	3 HP	4	NEMA 12	11A	Yes	Yes	16 x 37.5 x 11 (406.4 x 952.5 x 279.4)	55 (24.95)
HVFDSB3B0030G331/U	3 HP	4	NEMA 3R	11A	Yes	Yes	24.5 x 24 x 12 (622.3 x 609.6 x 304.8)	54 (24.49)
HVFDSB3B0050G131/U	5 HP	5	NEMA 1	18A	Yes	Yes	8.9 x 41.7 x 10.3 (226.06 x 1059.1 x 261.62)	56 (25.4)
HVFDSB3B0050G231/U	5 HP	5	NEMA 12	18A	Yes	Yes	16 x 41 x 11 (406 x 1041.4 x 279.4)	70 (31.75)
HVFDSB3B0050G331/U	5 HP	5	NEMA 3R	18A	Yes	Yes	28.5 x 30 x 12 (723.9 x 762 x 304.8)	78 (35.38)
HVFDSB3B0075G131/U	7.5 HP	5	NEMA 1	24A	Yes	Yes	8.9 x 41.7 x 10.3 (226.06 x 1059.1 x 261.62)	57.5 (26.08)
HVFDSB3B0075G231/U	7.5 HP	5	NEMA 12	24A	Yes	Yes	16 x 41 x 11 (406 x 1041.4 x 279.4)	70 (31.75)
HVFDSB3B0075G331/U	7.5 HP	5	NEMA 3R	24A	Yes	Yes	28.5 x 30 x 12 (723.9 x 762 x 304.8)	78 (35.38)
HVFDSB3B0100G131/U	10 HP	5	NEMA 1	31A	Yes	Yes	8.9 x 41.7 x 10.8 (226.06 x 1059.1 x 274.32)	60 (27.22)
HVFDSB3B0100G231/U	10 HP	5	NEMA 12	31A	Yes	Yes	16 x 45 x 11 (406 x 1143 x 279.4)	84 (38.1)
HVFDSB3B0100G331/U	10 HP	5	NEMA 3R	31A	Yes	Yes	28.5 x 30 x 12 (723.9 x 762 x 304.8)	78 (35.38)
HVFDSB3B0150G131/U	15 HP	6	NEMA 1	48A	Yes	Yes	12.4 x 55 x 11.3 (314.96 x 1397 x 287.02)	96.5 (43.77)
HVFDSB3B0150G231/U	15 HP	6	NEMA 12	48A	Yes	Yes	16 x 50.5 x 13 (406.4 x 1282.7 x 256.54)	125 (56.7)
HVFDSB3B0150G331/U	15 HP	6	NEMA 3R	48A	Yes	Yes	34.5 x 36 x 12 (867.3 x 914.4 x 304.8)	124 (56.25)
HVFDSB3B0200G131/U	20 HP	6	NEMA 1	62A	Yes	Yes	12.4 x 55 x 11.3 (314.96 x 1397 x 287.02)	100.5 (45.59)
HVFDSB3B0200G231/U	20 HP	6	NEMA 12	62A	Yes	Yes	20 x 54.5 x 13 (508 x 1384.3 x 330.2)	140 (63.5)
HVFDSB3B0200G331/U	20 HP	6	NEMA 3R	62A	Yes	Yes	34.5 x 36 x 12 (867.3 x 914.4 x 304.8)	124 (56.25)
HVFDSB3B0250G131/U	25 HP	6	NEMA 1	75A	Yes	Yes	20.9 x 59 x 13.2 (530.86 x 1498.6 x 335.28)	177 (80.29)
HVFDSB3B0250G231/U	25 HP	6	NEMA 12	75A	Yes	Yes	20 x 58.5 x 13.5 (508 x 1485.9 x 342.9)	160 (72.57)
HVFDSB3B0250G331/U	25 HP	6	NEMA 3R	75A	Yes	Yes	28.5 x 48 x 14 (711.2 x 1219.2 x 355.6)	193 (87.54)
HVFDSB3B0300G131/U	30 HP	7	NEMA 1	88A	Yes	Yes	20.9 x 59 x 13.2 (530.86 x 1498.6 x 335.28)	186 (84.37)
HVFDSB3B0300G231/U	30 HP	7	NEMA 12	88A	Yes	Yes	24 x 65.5 x 13.5 (609 x 1663.7 x 342.9)	175 (79.38)
HVFDSB3B0300G331/U	30 HP	7	NEMA 3R	88A	Yes	Yes	28.5 x 48 x 14 (711.2 x 1219.2 x 355.6)	193 (87.54)
HVFDSB3B0400G131/U	40 HP	7	NEMA 1	105A	Yes	Yes	20.9 x 59 x 13.2 (530.86 x 1498.6 x 335.28)	197 (89.36)
HVFDSB3B0400G231/U	40 HP	7	NEMA 12	105A	Yes	Yes	30 x 70.5 x 13.5 (762 x 1790.7 x 342.9)	200 (90.72)
HVFDSB3B0400G331/U	40 HP	7	NEMA 3R	105A	Yes	Yes	28.5 x 48 x 14 (711.2 x 1219.2 x 355.6)	193 (87.54)
HVFDSB3B0500G131/U	50 HP	8	NEMA 1	140A	Yes	Yes	25 x 70 x 16.2 (635 x 1778 x 411.48)	287 (130.18)
HVFDSB3B0500G231/U	50 HP	8	NEMA 12	140A	Yes	Yes	40.5 x 60 x 14 (1028.7 x 1524 x 355.6)	Contact Customer Care
HVFDSB3B0500G331/U	50 HP	8	NEMA 3R	140A	Yes	Yes	60 x 41 x 14 (1524 x 1041 x 356)	193 (87.54)
HVFDSB3B0600G131/U	60 HP	8	NEMA 1	170A	Yes	Yes	25 x 70 x 16.2 (635 x 1778 x 411.48)	297 (134.72)
HVFDSB3B0600G231/U	60 HP	8	NEMA 12	170A	Yes	Yes	40.5 x 60 x 14 (1028.7 x 1524 x 355.6)	Contact Customer Care
HVFDSB3B0600G331/U	60 HP	8	NEMA 3R	170A	Yes	Yes	60 x 41 x 14 (1524 x 1041 x 356)	193 (87.54)
HVFDSB3B0750G131/U	75 HP	8	NEMA 1	205A	Yes	Yes	25 x 70 x 16.2 (635 x 1778 x 411.48)	333 (151.05)
HVFDSB3B0750G231/U	75 HP	8	NEMA 12	205A	Yes	Yes	40.5 x 60 x 14 (1028.7 x 1524 x 355.6)	Contact Customer Care
HVFDSB3B0750G331/U	75 HP	8	NEMA 3R	205A	Yes	Yes	60 x 41 x 14 (1524 x 1041 x 356)	193 (87.54)
230 Vac — Drive with Fused Disconnect								
HVFDSB3B0007G110/U	0.75 HP	4	NEMA 1	3.7A	Yes	Yes	8.9 x 31.9 x 10.3 (226.06 x 810.26 x 261.62)	33 (14.97)
HVFDSB3B0007G210/U	0.75 HP	4	NEMA 12	3.7A	Yes	Yes	12 x 37.5 x 11 (304.8 x 952.5 x 279.4)	40 (18.14)
HVFDSB3B0007G310/U	0.75 HP	4	NEMA 3R	3.7A	Yes	Yes	20.5 x 20 x 12 (520.7 x 508 x 304.8)	43 (19.5)
HVFDSB3B0010G110/U	1 HP	4	NEMA 1	4.8A	Yes	Yes	8.9 x 31.9 x 10.3 (226.06 x 810.26 x 261.62)	33 (14.97)
HVFDSB3B0010G210/U	1 HP	4	NEMA 12	4.8A	Yes	Yes	12 x 37.5 x 11 (304.8 x 952.5 x 279.4)	40 (18.14)
HVFDSB3B0010G310/U	1 HP	4	NEMA 3R	4.8A	Yes	Yes	20.5 x 20 x 12 (520.7 x 508 x 304.8)	43 (19.5)
HVFDSB3B0015G110/U	1.5 HP	4	NEMA 1	6.6A	Yes	Yes	8.9 x 31.9 x 10.3 (226.06 x 810.26 x 261.62)	33 (14.97)
HVFDSB3B0015G210/U	1.5 HP	4	NEMA 12	6.6A	Yes	Yes	12 x 37.5 x 11 (304.8 x 952.5 x 279.4)	40 (18.14)
HVFDSB3B0015G310/U	1.5 HP	4	NEMA 3R	6.6A	Yes	Yes	20.5 x 20 x 12 (520.7 x 508 x 304.8)	43 (19.5)
HVFDSB3B0020G110/U	2 HP	4	NEMA 1	8A	Yes	Yes	8.9 x 31.9 x 10.3 (226.06 x 810.26 x 261.62)	33 (14.97)
HVFDSB3B0020G210/U	2 HP	4	NEMA 12	8A	Yes	Yes	12 x 37.5 x 11 (304.8 x 952.5 x 279.4)	40 (18.14)
HVFDSB3B0020G310/U	2 HP	4	NEMA 3R	8A	Yes	Yes	20.5 x 20 x 12 (520.7 x 508 x 304.8)	43 (19.5)
HVFDSB3B0030G110/U	3 HP	4	NEMA 1	11A	Yes	Yes	8.9 x 31.9 x 10.3 (226.06 x 810.26 x 261.62)	33 (14.97)

Material Number	Horsepower	Frame Type	Enclosure	Current Ratings	Drive Input Disconnect	Drive Input Fuses	Approximate, Dimensions in. (mm)	Weight lb (kg)
HVFDSB3B0030G210/U	3 HP	4	NEMA 12	11A	Yes	Yes	12 x 37.5 x 11 (304.8 x 952.5 x 279.4)	40 (18.14)
HVFDSB3B0030G310/U	3 HP	4	NEMA 3R	11A	Yes	Yes	20.5 x 20 x 12 (520.7 x 508 x 304.8)	43 (19.5)
HVFDSB3B0050G110/U	5 HP	5	NEMA 1	18A	Yes	Yes	8.9 x 34.7 x 10.3 (226.06 x 881.38 x 261.62)	43 (19.5)
HVFDSB3B0050G210/U	5 HP	5	NEMA 12	18A	Yes	Yes	12 x 41 x 11 (304.8 x 1041.4 x 279.4)	72 (32.66)
HVFDSB3B0050G310/U	5 HP	5	NEMA 3R	18A	Yes	Yes	20.5 x 24 x 12 (520.7 x 609.6 x 304.8)	61 (27.67)
HVFDSB3B0075G110/U	7.5 HP	5	NEMA 1	24A	Yes	Yes	8.9 x 34.7 x 10.3 (226.06 x 881.38 x 261.62)	43 (19.5)
HVFDSB3B0075G210/U	7.5 HP	5	NEMA 12	24A	Yes	Yes	12 x 41 x 11 (304.8 x 1041.4 x 279.4)	72 (32.66)
HVFDSB3B0075G310/U	7.5 HP	5	NEMA 3R	24A	Yes	Yes	20.5 x 24 x 12 (520.7 x 609.6 x 304.8)	61 (27.67)
HVFDSB3B0100G110/U	10 HP	5	NEMA 1	31A	Yes	Yes	8.9 x 34.7 x 10.3 (226.06 x 881.38 x 261.62)	43 (19.5)
HVFDSB3B0100G210/U	10 HP	5	NEMA 12	31A	Yes	Yes	12 x 41 x 11 (304.8 x 1041.4 x 279.4)	72 (32.66)
HVFDSB3B0100G310/U	10 HP	5	NEMA 3R	31A	Yes	Yes	20.5 x 24 x 12 (520.7 x 609.6 x 304.8)	61 (27.67)
HVFDSB3B0150G110/U	15 HP	6	NEMA 1	48A	Yes	Yes	12.4 x 45 x 11.3 (314.96 x 1143 x 287.02)	50 (22.68)
HVFDSB3B0150G210/U	15 HP	6	NEMA 12	48A	Yes	Yes	12 x 46.5 x 13 (304.8 x 1181.1 x 330.2)	120 (54.43)
HVFDSB3B0150G310/U	15 HP	6	NEMA 3R	48A	Yes	Yes	28.5 x 36 x 12 (723.9 x 914.4 x 304.8)	88 (39.92)
HVFDSB3B0200G110/U	20 HP	6	NEMA 1	62A	Yes	Yes	12.4 x 45 x 11.3 (314.96 x 1143 x 287.02)	50 (22.68)
HVFDSB3B0200G210/U	20 HP	6	NEMA 12	62A	Yes	Yes	12 x 46.5 x 13 (304.8 x 1181.1 x 330.2)	120 (54.43)
HVFDSB3B0200G310/U	20 HP	6	NEMA 3R	62A	Yes	Yes	28.5 x 36 x 12 (723.9 x 914.4 x 304.8)	88 (39.92)
HVFDSB3B0250G110/U	25 HP	6	NEMA 1	75A	Yes	Yes	20.8 x 51.5 x 13.2 (528.32 x 1308.1 x 335.28)	100 (45.36)
HVFDSB3B0250G210/U	25 HP	6	NEMA 12	75A	Yes	Yes	16 x 50.5 x 13.5 (406.4 x 1282.7 x 342.9)	145 (65.77)
HVFDSB3B0250G310/U	25 HP	6	NEMA 3R	75A	Yes	Yes	28.5 x 48 x 14 (711.2 x 1219.2 x 355.6)	149 (67.59)
HVFDSB3B0300G110/U	30 HP	7	NEMA 1	88A	Yes	Yes	20.8 x 51.5 x 13.2 (528.32 x 1308.1 x 335.28)	100 (45.36)
HVFDSB3B0300G210/U	30 HP	7	NEMA 12	88A	Yes	Yes	16 x 50.5 x 13.5 (406.4 x 1282.7 x 342.9)	160 (72.57)
HVFDSB3B0300G310/U	30 HP	7	NEMA 3R	88A	Yes	Yes	28.5 x 48 x 14 (711.2 x 1219.2 x 355.6)	149 (67.59)
HVFDSB3B0400G110/U	40 HP	7	NEMA 1	105A	Yes	Yes	20.8 x 51.5 x 13.2 (528.32 x 1308.1 x 335.28)	100 (45.36)
HVFDSB3B0400G210/U	40 HP	7	NEMA 12	105A	Yes	Yes	16 x 50.5 x 13.5 (406.4 x 1282.7 x 342.9)	175 (79.38)
HVFDSB3B0400G310/U	40 HP	7	NEMA 3R	105A	Yes	Yes	28.5 x 48 x 14 (711.2 x 1219.2 x 355.6)	149 (67.59)
HVFDSB3B0500G110/U	50 HP	8	NEMA 1	140A	Yes	Yes	25 x 60 x 16.2 (635 x 1524 x 411.48)	200 (90.72)
HVFDSB3B0500G210/U	50 HP	8	NEMA 12	140A	Yes	Yes	40.5 x 60 x 14 (1028.7 x 1524 x 355.6)	Contact Customer Care
HVFDSB3B0500G310/U	50 HP	8	NEMA 3R	140A	Yes	Yes	48 x 36 x 16 (1219 x 914 x 406)	149 (67.59)
HVFDSB3B0600G110/U	60 HP	8	NEMA 1	170A	Yes	Yes	25 x 60 x 16.2 (635 x 1524 x 411.48)	200 (90.72)
HVFDSB3B0600G210/U	60 HP	8	NEMA 12	170A	Yes	Yes	40.5 x 60 x 14 (1028.7 x 1524 x 355.6)	Contact Customer Care
HVFDSB3B0600G310/U	60 HP	8	NEMA 3R	170A	Yes	Yes	48 x 36 x 16 (1219 x 914 x 406)	149 (67.59)
HVFDSB3B0750G110/U	75 HP	8	NEMA 1	205A	Yes	Yes	25 x 60 x 16.2 (635 x 1524 x 411.48)	200 (90.72)
HVFDSB3B0750G210/U	75 HP	8	NEMA 12	205A	Yes	Yes	40.5 x 60 x 14 (1028.7 x 1524 x 355.6)	Contact Customer Care
HVFDSB3B0750G310/U	75 HP	8	NEMA 3R	205A	Yes	Yes	48 x 36 x 16 (1219 x 914 x 406)	149 (67.59)
460 Vac — Drive with 2 contactor bypass								
HVFDSB3C0015G120/U	1.5 HP	4	NEMA 1	3.4A	No	No	8.9 x 319. x 9.6 (226.06 x 805.18 x 243.84)	38 (17.24)
HVFDSB3C0015G220/U	1.5 HP	4	NEMA 12	3.4A	No	No	16 x 37.5 x 11 (406.4 x 952.5 x 279.4)	53 (24.04)
HVFDSB3C0015G320/U	1.5 HP	4	NEMA 3R	3.4A	No	No	24.5 x 24 x 10.5 (622.3 x 609.6 x 266.7)	49 (22.23)
HVFDSB3C0020G120/U	2 HP	4	NEMA 1	4.8A	No	No	8.9 x 319. x 9.6 (226.06 x 805.18 x 243.84)	38 (17.24)
HVFDSB3C0020G220/U	2 HP	4	NEMA 12	4.8A	No	No	12 x 37.5 x 11 (304.8 x 952.5 x 279.4)	53 (24.04)
HVFDSB3C0020G320/U	2 HP	4	NEMA 3R	4.8A	No	No	20.5 x 20 x 12 (520.7 x 208 x 304.8)	49 (22.23)
HVFDSB3C0030G120/U	3 HP	4	NEMA 1	5.6A	No	No	8.9 x 319. x 9.6 (226.06 x 805.18 x 243.84)	38 (17.24)
HVFDSB3C0030G220/U	3 HP	4	NEMA 12	5.6A	No	No	16 x 37.5 x 11 (406.4 x 952.5 x 279.4)	53 (24.04)
HVFDSB3C0030G320/U	3 HP	4	NEMA 3R	5.6A	No	No	24.5 x 24 x 10.5 (622.3 x 609.6 x 266.7)	49 (22.23)
HVFDSB3C0040G120/U	4 HP	4	NEMA 1	8A	No	No	8.9 x 319. x 9.6 (226.06 x 805.18 x 243.84)	38 (17.24)
HVFDSB3C0040G220/U	4 HP	4	NEMA 12	8A	No	No	16 x 37.5 x 11 (406.4 x 952.5 x 279.4)	53 (24.04)
HVFDSB3C0040G320/U	4 HP	4	NEMA 3R	8A	No	No	24.5 x 24 x 10.5 (622.3 x 609.6 x 266.7)	49 (22.23)
HVFDSB3C0050G120/U	5 HP	4	NEMA 1	9.6A	No	No	8.9 x 319. x 9.6 (226.06 x 805.18 x 243.84)	38 (17.24)
HVFDSB3C0050G220/U	5 HP	4	NEMA 12	9.6A	No	No	16 x 37.5 x 11 (406.4 x 952.5 x 279.4)	53 (24.04)
HVFDSB3C0050G320/U	5 HP	4	NEMA 3R	9.6A	No	No	24.5 x 24 x 10.5 (622.3 x 609.6 x 266.7)	49 (22.23)
HVFDSB3C0075G120/U	7.5 HP	4	NEMA 1	12A	No	No	8.9 x 319. x 9.6 (226.06 x 805.18 x 243.84)	38 (17.24)
HVFDSB3C0075G220/U	7.5 HP	4	NEMA 12	12A	No	No	16 x 37.5 x 11 (406.4 x 952.5 x 279.4)	53 (24.04)
HVFDSB3C0075G320/U	7.5 HP	4	NEMA 3R	12A	No	No	24.5 x 24 x 10.5 (622.3 x 609.6 x 266.7)	49 (22.23)
HVFDSB3C0100G120/U	10 HP	5	NEMA 1	16A	No	No	8.9 x 34.7 x 9.6 (226.06 x 876.3 x 243.84)	48 (21.77)
HVFDSB3C0100G220/U	10 HP	5	NEMA 12	16A	No	No	16 x 41 x 11 (406.4 x 1041.4 x 279.4)	64 (29.03)
HVFDSB3C0100G320/U	10 HP	5	NEMA 3R	16A	No	No	24.5 x 24 x 10.5 (622.3 x 609.6 x 266.7)	72 (32.66)
HVFDSB3C0150G120/U	15 HP	5	NEMA 1	23A	No	No	8.9 x 34.7 x 9.6 (226.06 x 876.3 x 243.84)	50 (22.68)
HVFDSB3C0150G220/U	15 HP	5	NEMA 12	23A	No	No	16 x 41 x 11 (406.4 x 1041.4 x 279.4)	64 (29.03)
HVFDSB3C0150G320/U	15 HP	5	NEMA 3R	23A	No	No	24.5 x 24 x 10.5 (622.3 x 609.6 x 266.7)	72 (32.66)

Material Number	Horsepower	Frame Type	Enclosure	Current Ratings	Drive Input Disconnect	Drive Input Fuses	Approximate, Dimensions in. (mm)	Weight lb (kg)
HVFDSB3C0200G120/U	20 HP	5	NEMA 1	31A	No	No	8.9 x 34.7 x 9.6 (226.06 x 876.3 x 243.84)	50 (22.68)
HVFDSB3C0200G220/U	20 HP	5	NEMA 12	31A	No	No	16 x 45 x 11 (406.4 x 1143 x 279.4)	76 (34.47)
HVFDSB3C0200G320/U	20 HP	5	NEMA 3R	31A	No	No	24.5 x 24 x 10.5 (622.3 x 609.6 x 266.7)	72 (32.66)
HVFDSB3C0250G120/U	25 HP	6	NEMA 1	38A	No	No	12.4 x 45.1 x 10.1 (314.96 x 1143 x 256.54)	85 (24.95)
HVFDSB3C0250G220/U	25 HP	6	NEMA 12	38A	No	No	16 x 50.5 x 13 (406.4 x 1282.7 x 330.2)	120 (54.43)
HVFDSB3C0250G320/U	25 HP	6	NEMA 3R	38A	No	No	28.5 x 36 x 10.5 (723.9 x 914.4 x 266.7)	118 (53.52)
HVFDSB3C0300G120/U	30 HP	6	NEMA 1	46A	No	No	12.4 x 45.1 x 10.1 (314.96 x 1143 x 256.54)	59 (26.76)
HVFDSB3C0300G220/U	30 HP	6	NEMA 12	46A	No	No	16 x 50.5 x 13 (406.4 x 1282.7 x 330.2)	120 (54.43)
HVFDSB3C0300G320/U	30 HP	6	NEMA 3R	46A	No	No	28.5 x 36 x 10.5 (723.9 x 914.4 x 266.7)	118 (53.52)
HVFDSB3C0400G120/U	40 HP	6	NEMA 1	61A	No	No	12.4 x 45.1 x 10.1 (314.96 x 1143 x 256.54)	59 (26.76)
HVFDSB3C0400G220/U	40 HP	6	NEMA 12	61A	No	No	16 x 50.5 x 13 (406.4 x 1282.7 x 330.2)	136 (61.69)
HVFDSB3C0400G320/U	40 HP	6	NEMA 3R	61A	No	No	28.5 x 36 x 10.5 (723.9 x 914.4 x 266.7)	118 (53.52)
HVFDSB3C0500G120/U	50 HP	7	NEMA 1	72A	No	No	20.8 x 51.5 x 12.2 (530.86 x 1313.18 x 309.88)	169 (76.66)
HVFDSB3C0500G220/U	50 HP	7	NEMA 12	72A	No	No	20 x 58.5 x 13.5 (508 x 1485.9 x 342.9)	150 (68.04)
HVFDSB3C0500G320/U	50 HP	7	NEMA 3R	72A	No	No	28.5 x 48 x 12.5 (723.9 x 1219.2 x 317.5)	185 (83.91)
HVFDSB3C0600G120/U	60 HP	7	NEMA 1	87A	No	No	20.8 x 51.5 x 12.2 (530.86 x 1313.18 x 309.88)	179 (81.19)
HVFDSB3C0600G220/U	60 HP	7	NEMA 12	87A	No	No	20 x 58.5 x 13.5 (508 x 1485.9 x 342.9)	165 (74.84)
HVFDSB3C0600G320/U	60 HP	7	NEMA 3R	87A	No	No	28.5 x 48 x 12.5 (723.9 x 1219.2 x 317.5)	185 (83.91)
HVFDSB3C0750G120/U	75 HP	7	NEMA 1	105A	No	No	20.8 x 51.5 x 12.2 (530.86 x 1313.18 x 309.88)	189 (85.73)
HVFDSB3C0750G220/U	75 HP	7	NEMA 12	105A	No	No	20 x 58.5 x 13.5 (508 x 1485.9 x 342.9)	193 (87.54)
HVFDSB3C0750G320/U	75 HP	7	NEMA 3R	105A	No	No	28.5 x 48 x 12.5 (723.9 x 1219.2 x 317.5)	185 (83.91)
HVFDSB3C1000G120/U	100 HP	8	NEMA 1	140A	No	No	25 x 60 x 15.2 (635 x 1524 x 386.08)	250 (113.4)
HVFDSB3C1000G220/U	100 HP	8	NEMA 12	140A	No	No	Contact Customer Care	Contact Customer Care
HVFDSB3C1000G320/U	100 HP	8	NEMA 3R	140A	No	No	40.5 x 60 x 12.5 (1028.7 x 1524 x 317.5)	430 (195.04)
HVFDSB3C1250G120/U	125 HP	8	NEMA 1	170A	No	No	25 x 60 x 15.2 (635 x 1524 x 386.08)	265 (120.2)
HVFDSB3C1250G220/U	125 HP	8	NEMA 12	170A	No	No	Contact Customer Care	Contact Customer Care
HVFDSB3C1250G320/U	125 HP	8	NEMA 3R	170A	No	No	40.5 x 60 x 12.5 (1028.7 x 1524 x 317.5)	430 (195.04)
HVFDSB3C1500G120/U	150 HP	8	NEMA 1	205A	No	No	25 x 60 x 15.2 (635 x 1524 x 386.08)	280 (127.01)
HVFDSB3C1500G220/U	150 HP	8	NEMA 12	205A	No	No	Contact Customer Care	Contact Customer Care
HVFDSB3C1500G320/U	150 HP	8	NEMA 3R	205A	No	No	40.5 x 60 x 12.5 (1028.7 x 1524 x 317.5)	430 (195.04)
460 Vac — Drive with 3 contactor bypass								
HVFDSB3C0015G130/U	1.5 HP	4	NEMA 1	3.4A	Yes	Yes	8.9 x 38.9 x 10.3 (226.06 x 810.26 x 261.62)	44 (19.96)
HVFDSB3C0015G230/U	1.5 HP	4	NEMA 12	3.4A	Yes	Yes	16 x 37.5 x 11 (304.8 x 952.5 x 279.4)	53 (24.04)
HVFDSB3C0015G330/U	1.5 HP	4	NEMA 3R	3.4A	Yes	Yes	24.5 x 24 x 12 (622.3 x 609.6 x 304.8)	54 (24.49)
HVFDSB3C0020G130/U	2 HP	4	NEMA 1	4.8A	Yes	Yes	8.9 x 38.9 x 10.3 (226.06 x 810.26 x 261.62)	44 (19.96)
HVFDSB3C0020G230/U	2 HP	4	NEMA 12	4.8A	Yes	Yes	16 x 37.5 x 11 (406.4 x 952.5 x 279.4)	53 (24.04)
HVFDSB3C0020G330/U	2 HP	4	NEMA 3R	4.8A	Yes	Yes	24.5 x 24 x 10.5 (622.3 x 609.6 x 266.7)	54 (24.49)
HVFDSB3C0030G130/U	3 HP	4	NEMA 1	5.6A	Yes	Yes	8.9 x 38.9 x 10.3 (226.06 x 810.26 x 261.62)	44 (19.96)
HVFDSB3C0030G230/U	3 HP	4	NEMA 12	5.6A	Yes	Yes	16 x 37.5 x 11 (304.8 x 952.5 x 279.4)	53 (24.04)
HVFDSB3C0030G330/U	3 HP	4	NEMA 3R	5.6A	Yes	Yes	24.5 x 24 x 12 (622.3 x 609.6 x 304.8)	54 (24.49)
HVFDSB3C0040G130/U	4 HP	4	NEMA 1	8A	Yes	Yes	8.9 x 38.9 x 10.3 (226.06 x 810.26 x 261.62)	44 (19.96)
HVFDSB3C0040G230/U	4 HP	4	NEMA 12	8A	Yes	Yes	16 x 37.5 x 11 (304.8 x 952.5 x 279.4)	53 (24.04)
HVFDSB3C0040G330/U	4 HP	4	NEMA 3R	8A	Yes	Yes	24.5 x 24 x 12 (622.3 x 609.6 x 304.8)	54 (24.49)
HVFDSB3C0050G130/U	5 HP	4	NEMA 1	9.6A	Yes	Yes	8.9 x 38.9 x 10.3 (226.06 x 810.26 x 261.62)	44 (19.96)
HVFDSB3C0050G230/U	5 HP	4	NEMA 12	9.6A	Yes	Yes	16 x 37.5 x 11 (304.8 x 952.5 x 279.4)	53 (24.04)
HVFDSB3C0050G330/U	5 HP	4	NEMA 3R	9.6A	Yes	Yes	24.5 x 24 x 12 (622.3 x 609.6 x 304.8)	54 (24.49)
HVFDSB3C0075G130/U	7.5 HP	4	NEMA 1	12A	Yes	Yes	8.9 x 38.9 x 10.3 (226.06 x 810.26 x 261.62)	44 (19.96)
HVFDSB3C0075G230/U	7.5 HP	4	NEMA 12	12A	Yes	Yes	16 x 37.5 x 11 (406.4 x 952.5 x 279.4)	53 (24.04)
HVFDSB3C0075G330/U	7.5 HP	4	NEMA 3R	12A	Yes	Yes	24.5 x 24 x 12 (622.3 x 609.6 x 304.8)	54 (24.49)
HVFDSB3C0100G130/U	10 HP	5	NEMA 1	16A	Yes	Yes	8.9 x 41.7 x 10.3 (226.06 x 881.38 x 261.62)	55 (24.95)
HVFDSB3C0100G230/U	10 HP	5	NEMA 12	16A	Yes	Yes	16 x 41 x 11 (406.4 x 1041.4 x 279.4)	64 (29.03)
HVFDSB3C0100G330/U	10 HP	5	NEMA 3R	16A	Yes	Yes	28.5 x 30 x 12 (723.9 x 762 x 304.8)	78 (35.38)
HVFDSB3C0150G130/U	15 HP	5	NEMA 1	23A	Yes	Yes	8.9 x 41.7 x 10.3 (226.06 x 881.38 x 261.62)	57 (25.85)
HVFDSB3C0150G230/U	15 HP	5	NEMA 12	23A	Yes	Yes	16 x 41 x 11 (406.4 x 1041.4 x 279.4)	64 (29.03)
HVFDSB3C0150G330/U	15 HP	5	NEMA 3R	23A	Yes	Yes	28.5 x 30 x 12 (723.9 x 762 x 304.8)	78 (35.38)
HVFDSB3C0200G130/U	20 HP	5	NEMA 1	31A	Yes	Yes	8.9 x 41.7 x 10.8 (226.06 x 881.38 x 274.32)	59 (26.76)
HVFDSB3C0200G230/U	20 HP	5	NEMA 12	31A	Yes	Yes	16 x 45 x 11 (406.4 x 1143 x 279.4)	76 (34.47)
HVFDSB3C0200G330/U	20 HP	5	NEMA 3R	31A	Yes	Yes	28.5 x 30 x 12 (723.9 x 762 x 304.8)	78 (35.38)
HVFDSB3C0250G130/U	25 HP	6	NEMA 1	38A	Yes	Yes	12.4 x 55.2 x 11.3 (314.96 x 1145.5 x 287.02)	94.5 (42.86)
HVFDSB3C0250G230/U	25 HP	6	NEMA 12	38A	Yes	Yes	16 x 50.5 x 13 (406.4 x 1282.7 x 330.2)	120 (54.43)

Material Number	Horsepower	Frame Type	Enclosure	Current Ratings	Drive Input Disconnect	Drive Input Fuses	Approximate, Dimensions in. (mm)	Weight lb (kg)
HVFDSB3C0250G330/U	25 HP	6	NEMA 3R	38A	Yes	Yes	34.5 x 36 x 12 (723.9 x 914.4 x 304.8)	124 (56.25)
HVFDSB3C0300G130/U	30 HP	6	NEMA 1	46A	Yes	Yes	12.4 x 55.2 x 11.3 (314.96 x 1145.5 x 287.02)	98.5 (44.68)
HVFDSB3C0300G230/U	30 HP	6	NEMA 12	46A	Yes	Yes	16 x 50.5 x 13 (406.4 x 1282.7 x 330.2)	120 (54.43)
HVFDSB3C0300G330/U	30 HP	6	NEMA 3R	46A	Yes	Yes	34.5 x 36 x 12 (723.9 x 914.4 x 304.8)	124 (56.25)
HVFDSB3C0400G130/U	40 HP	6	NEMA 1	61A	Yes	Yes	12.4 x 55.2 x 11.3 (314.96 x 1145.5 x 287.02)	105.5 (47.85)
HVFDSB3C0400G230/U	40 HP	6	NEMA 12	61A	Yes	Yes	16 x 50.5 x 13 (406.4 x 1282.7 x 330.2)	136 (61.69)
HVFDSB3C0400G330/U	40 HP	6	NEMA 3R	61A	Yes	Yes	34.5 x 36 x 12 (723.9 x 914.4 x 304.8)	124 (56.25)
HVFDSB3C0500G130/U	50 HP	7	NEMA 1	72A	Yes	Yes	20.8 x 59 x 13.2 (528.32 x 1308.1 x 335.28)	175 (79.38)
HVFDSB3C0500G230/U	50 HP	7	NEMA 12	72A	Yes	Yes	20 x 58.5 x 13.5 (508 x 1485.9 x 342.9)	150 (68.04)
HVFDSB3C0500G330/U	50 HP	7	NEMA 3R	72A	Yes	Yes	40.5 x 48 x 14 (1028.7 x 1219.2 x 355.6)	193 (87.54)
HVFDSB3C0600G130/U	60 HP	7	NEMA 1	87A	Yes	Yes	20.8 x 59 x 13.2 (528.32 x 1308.1 x 335.28)	184 (83.46)
HVFDSB3C0600G230/U	60 HP	7	NEMA 12	87A	Yes	Yes	20 x 58.5 x 13.5 (508 x 1485.9 x 342.9)	165 (74.84)
HVFDSB3C0600G330/U	60 HP	7	NEMA 3R	87A	Yes	Yes	40.5 x 48 x 14 (1028.7 x 1219.2 x 355.6)	193 (87.54)
HVFDSB3C0750G130/U	75 HP	7	NEMA 1	105A	Yes	Yes	20.8 x 59 x 13.2 (528.32 x 1308.1 x 335.28)	195 (88.45)
HVFDSB3C0750G230/U	75 HP	7	NEMA 12	105A	Yes	Yes	20 x 58.5 x 13.5 (508 x 1485.9 x 342.9)	193 (87.54)
HVFDSB3C0750G330/U	75 HP	7	NEMA 3R	105A	Yes	Yes	40.5 x 48 x 14 (1028.7 x 1219.2 x 355.6)	193 (87.54)
HVFDSB3C1000G130/U	100 HP	8	NEMA 1	140A	Yes	Yes	25 x 70 x 16.2 (635 x 1524 x 411.48)	285 (129.27)
HVFDSB3C1000G230/U	100 HP	8	NEMA 12	140A	Yes	Yes	Contact Customer Care	Contact Customer Care
HVFDSB3C1000G330/U	100 HP	8	NEMA 3R	140A	Yes	Yes	40.5 x 60 x 14 (1028.7 x 1524 x 355.6)	440 (199.58)
HVFDSB3C1250G130/U	125 HP	8	NEMA 1	170A	Yes	Yes	25 x 70 x 16.2 (635 x 1524 x 411.48)	295 (133.81)
HVFDSB3C1250G230/U	125 HP	8	NEMA 12	170A	Yes	Yes	Contact Customer Care	Contact Customer Care
HVFDSB3C1250G330/U	125 HP	8	NEMA 3R	170A	Yes	Yes	40.5 x 60 x 14 (1028.7 x 1524 x 355.6)	440 (199.58)
HVFDSB3C1500G130/U	150 HP	8	NEMA 1	205A	Yes	Yes	25 x 70 x 16.2 (635 x 1524 x 411.48)	331 (150.14)
HVFDSB3C1500G230/U	150 HP	8	NEMA 12	205A	Yes	Yes	Contact Customer Care	Contact Customer Care
HVFDSB3C1500G330/U	150 HP	8	NEMA 3R	205A	Yes	Yes	40.5 x 60 x 14 (1028.7 x 1524 x 355.6)	440 (199.58)
460 Vac — Drive with 3 contactor bypass and Auto bypass								
HVFDSB3C0015G131/U	1.5 HP	4	NEMA 1	3.4A	Yes	Yes	8.9 x 38.9 x 10.3 (226.06 x 810.26 x 261.62)	46 (20.87)
HVFDSB3C0015G231/U	1.5 HP	4	NEMA 12	3.4A	Yes	Yes	16 x 37.5 x 11 (304.8 x 952.5 x 279.4)	53 (24.04)
HVFDSB3C0015G331/U	1.5 HP	4	NEMA 3R	3.4A	Yes	Yes	24.5 x 24 x 12 (622.3 x 609.6 x 304.8)	54 (24.49)
HVFDSB3C0020G131/U	2 HP	4	NEMA 1	4.8A	Yes	Yes	8.9 x 38.7 x 10.7 (226.06 x 982.98 x 271.78)	Contact Customer Care
HVFDSB3C0020G231/U	2 HP	4	NEMA 12	4.8A	Yes	Yes	16 x 37.5 x 11 (304.8 x 952.5 x 279.4)	53 (24.04)
HVFDSB3C0020G331/U	2 HP	4	NEMA 3R	4.8A	Yes	Yes	24.5 x 24 x 12 (622.3 x 609.6 x 304.8)	54 (24.49)
HVFDSB3C0030G131/U	3 HP	4	NEMA 1	5.6A	Yes	Yes	8.9 x 38.9 x 10.3 (226.06 x 810.26 x 261.62)	46 (20.87)
HVFDSB3C0030G231/U	3 HP	4	NEMA 12	5.6A	Yes	Yes	16 x 37.5 x 11 (304.8 x 952.5 x 279.4)	53 (24.04)
HVFDSB3C0030G331/U	3 HP	4	NEMA 3R	5.6A	Yes	Yes	24.5 x 24 x 12 (622.3 x 609.6 x 304.8)	54 (24.49)
HVFDSB3C0040G131/U	4 HP	4	NEMA 1	8A	Yes	Yes	8.9 x 38.9 x 10.3 (226.06 x 810.26 x 261.62)	46 (20.87)
HVFDSB3C0040G231/U	4 HP	4	NEMA 12	8A	Yes	Yes	16 x 37.5 x 11 (304.8 x 952.5 x 279.4)	53 (24.04)
HVFDSB3C0040G331/U	4 HP	4	NEMA 3R	8A	Yes	Yes	24.5 x 24 x 12 (622.3 x 609.6 x 304.8)	54 (24.49)
HVFDSB3C0050G131/U	5 HP	4	NEMA 1	9.6A	Yes	Yes	8.9 x 38.9 x 10.3 (226.06 x 810.26 x 261.62)	46 (20.87)
HVFDSB3C0050G231/U	5 HP	4	NEMA 12	9.6A	Yes	Yes	16 x 37.5 x 11 (304.8 x 952.5 x 279.4)	53 (24.04)
HVFDSB3C0050G331/U	5 HP	4	NEMA 3R	9.6A	Yes	Yes	24.5 x 24 x 12 (622.3 x 609.6 x 304.8)	54 (24.49)
HVFDSB3C0075G131/U	7.5 HP	4	NEMA 1	12A	Yes	Yes	8.9 x 38.9 x 10.3 (226.06 x 810.26 x 261.62)	46 (20.87)
HVFDSB3C0075G231/U	7.5 HP	4	NEMA 12	12A	Yes	Yes	16 x 37.5 x 11 (406.4 x 952.5 x 279.4)	53 (24.04)
HVFDSB3C0075G331/U	7.5 HP	4	NEMA 3R	12A	Yes	Yes	24.5 x 24 x 12 (622.3 x 609.6 x 304.8)	54 (24.49)
HVFDSB3C0100G131/U	10 HP	5	NEMA 1	16A	Yes	Yes	8.9 x 41.7 x 10.3 (226.06 x 881.38 x 261.62)	56 (25.4)
HVFDSB3C0100G231/U	10 HP	5	NEMA 12	16A	Yes	Yes	16 x 41 x 11 (406.4 x 1041.4 x 279.4)	64 (29.03)
HVFDSB3C0100G331/U	10 HP	5	NEMA 3R	16A	Yes	Yes	28.5 x 30 x 12 (723.9 x 762 x 304.8)	78 (35.38)
HVFDSB3C0150G131/U	15 HP	5	NEMA 1	23A	Yes	Yes	8.9 x 41.7 x 10.3 (226.06 x 881.38 x 261.62)	56 (25.4)
HVFDSB3C0150G231/U	15 HP	5	NEMA 12	23A	Yes	Yes	16 x 41 x 11 (406.4 x 1041.4 x 279.4)	64 (29.03)
HVFDSB3C0150G331/U	15 HP	5	NEMA 3R	23A	Yes	Yes	28.5 x 30 x 12 (723.9 x 762 x 304.8)	78 (35.38)
HVFDSB3C0200G131/U	20 HP	5	NEMA 1	31A	Yes	Yes	8.9 x 41.7 x 10.8 (226.06 x 881.38 x 274.32)	60 (27.22)
HVFDSB3C0200G231/U	20 HP	5	NEMA 12	31A	Yes	Yes	16 x 45 x 11 (406.4 x 1143 x 279.4)	76 (34.47)
HVFDSB3C0200G331/U	20 HP	5	NEMA 3R	31A	Yes	Yes	28.5 x 30 x 12 (723.9 x 762 x 304.8)	78 (35.38)
HVFDSB3C0250G131/U	25 HP	6	NEMA 1	38A	Yes	Yes	12.4 x 55.2 x 11.3 (314.96 x 1145.5 x 287.02)	96.5 (43.77)
HVFDSB3C0250G231/U	25 HP	6	NEMA 12	38A	Yes	Yes	16 x 50.5 x 13 (406.4 x 1282.7 x 330.2)	120 (54.43)
HVFDSB3C0250G331/U	25 HP	6	NEMA 3R	38A	Yes	Yes	34.5 x 36 x 12 (723.9 x 914.4 x 304.8)	124 (56.25)
HVFDSB3C0300G131/U	30 HP	6	NEMA 1	46A	Yes	Yes	12.4 x 55.2 x 11.3 (314.96 x 1145.5 x 287.02)	100.5 (45.59)
HVFDSB3C0300G231/U	30 HP	6	NEMA 12	46A	Yes	Yes	16 x 50.5 x 13 (406.4 x 1282.7 x 330.2)	120 (54.43)
HVFDSB3C0300G331/U	30 HP	6	NEMA 3R	46A	Yes	Yes	34.5 x 36 x 12 (723.9 x 914.4 x 304.8)	124 (56.25)
HVFDSB3C0400G131/U	40 HP	6	NEMA 1	61A	Yes	Yes	12.4 x 55.2 x 11.3 (314.96 x 1145.5 x 287.02)	107.5 (48.76)

Material Number	Horsepower	Frame Type	Enclosure	Current Ratings	Drive Input Disconnect	Drive Input Fuses	Approximate, Dimensions in. (mm)	Weight lb (kg)
HVFDSB3C0400G231/U	40 HP	6	NEMA 12	61A	Yes	Yes	16 x 50.5 x 13 (406.4 x 1282.7 x 330.2)	136 (61.69)
HVFDSB3C0400G331/U	40 HP	6	NEMA 3R	61A	Yes	Yes	34.5 x 36 x 12 (723.9 x 914.4 x 304.8)	124 (56.25)
HVFDSB3C0500G131/U	50 HP	7	NEMA 1	72A	Yes	Yes	20.8 x 59 x 13.2 (528.32 x 1308.1 x 335.28)	177 (80.29)
HVFDSB3C0500G231/U	50 HP	7	NEMA 12	72A	Yes	Yes	20 x 58.5 x 13.5 (508 x 1485.9 x 342.9)	150 (68.04)
HVFDSB3C0500G331/U	50 HP	7	NEMA 3R	72A	Yes	Yes	40.5 x 48 x 14 (1028.7 x 1219.2 x 355.6)	193 (87.54)
HVFDSB3C0600G131/U	60 HP	7	NEMA 1	87A	Yes	Yes	20.8 x 59 x 13.2 (528.32 x 1308.1 x 335.28)	186 (84.37)
HVFDSB3C0600G231/U	60 HP	7	NEMA 12	87A	Yes	Yes	20 x 58.5 x 13.5 (508 x 1485.9 x 342.9)	165 (74.84)
HVFDSB3C0600G331/U	60 HP	7	NEMA 3R	87A	Yes	Yes	40.5 x 48 x 14 (1028.7 x 1219.2 x 355.6)	193 (87.54)
HVFDSB3C0750G131/U	75 HP	7	NEMA 1	105A	Yes	Yes	20.8 x 59 x 13.2 (528.32 x 1308.1 x 335.28)	197 (89.36)
HVFDSB3C0750G231/U	75 HP	7	NEMA 12	105A	Yes	Yes	20 x 58.5 x 13.5 (508 x 1485.9 x 342.9)	193 (87.54)
HVFDSB3C0750G331/U	75 HP	7	NEMA 3R	105A	Yes	Yes	40.5 x 48 x 14 (1028.7 x 1219.2 x 355.6)	193 (87.54)
HVFDSB3C1000G131/U	100 HP	8	NEMA 1	140A	Yes	Yes	25 x 70 x 16.2 (635 x 1524 x 411.48)	287 (130.18)
HVFDSB3C1000G231/U	100 HP	8	NEMA 12	140A	Yes	Yes	Contact Customer Care	Contact Customer Care
HVFDSB3C1000G331/U	100 HP	8	NEMA 3R	140A	Yes	Yes	40.5 x 60 x 14 (1028.7 x 1524 x 355.6)	440 (199.58)
HVFDSB3C1250G131/U	125 HP	8	NEMA 1	170A	Yes	Yes	25 x 70 x 16.2 (635 x 1524 x 411.48)	297 (134.72)
HVFDSB3C1250G231/U	125 HP	8	NEMA 12	170A	Yes	Yes	Contact Customer Care	Contact Customer Care
HVFDSB3C1250G331/U	125 HP	8	NEMA 3R	170A	Yes	Yes	40.5 x 60 x 14 (1028.7 x 1524 x 355.6)	440 (199.58)
HVFDSB3C1500G131/U	150 HP	8	NEMA 1	205A	Yes	Yes	25 x 70 x 16.2 (635 x 1524 x 411.48)	333 (151.05)
HVFDSB3C1500G231/U	150 HP	8	NEMA 12	205A	Yes	Yes	Contact Customer Care	Contact Customer Care
HVFDSB3C1500G331/U	150 HP	8	NEMA 3R	205A	Yes	Yes	40.5 x 60 x 14 (1028.7 x 1524 x 355.6)	440 (199.58)
460 Vac — Drive with Fused Disconnect								
HVFDSB3C0015G110/U	1.5 HP	4	NEMA 1	3.4A	Yes	Yes	8.9 x 31.9 x 10.3 (226.06 x 810.26 x 261.62)	33 (14.97)
HVFDSB3C0015G210/U	1.5 HP	4	NEMA 12	3.4A	Yes	Yes	12 x 37.5 x 11 (304.8 x 952.5 x 279.4)	40 (18.14)
HVFDSB3C0015G310/U	1.5 HP	4	NEMA 3R	3.4A	Yes	Yes	20.5 x 20 x 12 (520.7 x 208 x 304.8)	43 (19.5)
HVFDSB3C0020G110/U	2 HP	4	NEMA 1	4.8A	Yes	Yes	8.9 x 31.9 x 10.3 (226.06 x 810.26 x 261.62)	33 (14.97)
HVFDSB3C0020G210/U	2 HP	4	NEMA 12	4.8A	Yes	Yes	8.9 x 38.9 x 10.3 (226.06 x 810.26 x 261.62)	40 (18.14)
HVFDSB3C0020G310/U	2 HP	4	NEMA 3R	4.8A	Yes	Yes	16 x 37.5 x 11 (304.8 x 952.5 x 279.4)	43 (19.5)
HVFDSB3C0030G110/U	3 HP	4	NEMA 1	5.6A	Yes	Yes	8.9 x 31.9 x 10.3 (226.06 x 810.26 x 261.62)	33 (14.97)
HVFDSB3C0030G210/U	3 HP	4	NEMA 12	5.6A	Yes	Yes	12 x 37.5 x 11 (304.8 x 952.5 x 279.4)	40 (18.14)
HVFDSB3C0030G310/U	3 HP	4	NEMA 3R	5.6A	Yes	Yes	20.5 x 20 x 12 (520.7 x 208 x 304.8)	43 (19.5)
HVFDSB3C0040G110/U	4 HP	4	NEMA 1	8A	Yes	Yes	8.9 x 31.9 x 10.3 (226.06 x 810.26 x 261.62)	33 (14.97)
HVFDSB3C0040G210/U	4 HP	4	NEMA 12	8A	Yes	Yes	12 x 37.5 x 11 (304.8 x 952.5 x 279.4)	40 (18.14)
HVFDSB3C0040G310/U	4 HP	4	NEMA 3R	8A	Yes	Yes	20.5 x 20 x 12 (520.7 x 208 x 304.8)	43 (19.5)
HVFDSB3C0050G110/U	5 HP	4	NEMA 1	9.6A	Yes	Yes	8.9 x 31.9 x 10.3 (226.06 x 810.26 x 261.62)	33 (14.97)
HVFDSB3C0050G210/U	5 HP	4	NEMA 12	9.6A	Yes	Yes	12 x 37.5 x 11 (304.8 x 952.5 x 279.4)	40 (18.14)
HVFDSB3C0050G310/U	5 HP	4	NEMA 3R	9.6A	Yes	Yes	20.5 x 20 x 12 (520.7 x 208 x 304.8)	43 (19.5)
HVFDSB3C0075G110/U	7.5 HP	4	NEMA 1	12A	Yes	Yes	8.9 x 31.9 x 10.3 (226.06 x 810.26 x 261.62)	33 (14.97)
HVFDSB3C0075G210/U	7.5 HP	4	NEMA 12	12A	Yes	Yes	12 x 37.5 x 11 (304.8 x 952.5 x 279.4)	40 (18.14)
HVFDSB3C0075G310/U	7.5 HP	4	NEMA 3R	12A	Yes	Yes	20.5 x 20 x 12 (520.7 x 208 x 304.8)	43 (19.5)
HVFDSB3C0100G110/U	10 HP	4	NEMA 1	16A	Yes	Yes	8.9 x 34.7 x 10.3 (226.06 x 881.38 x 261.62)	43 (19.5)
HVFDSB3C0100G210/U	10 HP	5	NEMA 12	16A	Yes	Yes	12 x 41 x 11 (304.8 x 1041.4 x 279.4)	72 (32.66)
HVFDSB3C0100G310/U	10 HP	5	NEMA 3R	16A	Yes	Yes	20.5 x 24 x 12 (520.7 x 609.6 x 304.8)	61 (27.67)
HVFDSB3C0150G110/U	15 HP	5	NEMA 1	23A	Yes	Yes	8.9 x 34.7 x 10.3 (226.06 x 881.38 x 261.62)	43 (19.5)
HVFDSB3C0150G210/U	15 HP	5	NEMA 12	23A	Yes	Yes	12 x 41 x 11 (304.8 x 1041.4 x 279.4)	72 (32.66)
HVFDSB3C0150G310/U	15 HP	5	NEMA 3R	23A	Yes	Yes	20.5 x 24 x 12 (520.7 x 609.6 x 304.8)	61 (27.67)
HVFDSB3C0200G110/U	20 HP	5	NEMA 1	31A	Yes	Yes	8.9 x 34.7 x 10.3 (226.06 x 881.38 x 261.62)	43 (19.5)
HVFDSB3C0200G210/U	20 HP	5	NEMA 12	31A	Yes	Yes	12 x 41 x 11 (304.8 x 1041.4 x 279.4)	72 (32.66)
HVFDSB3C0200G310/U	20 HP	5	NEMA 3R	31A	Yes	Yes	20.5 x 24 x 12 (520.7 x 609.6 x 304.8)	61 (27.67)
HVFDSB3C0250G110/U	25 HP	6	NEMA 1	38A	Yes	Yes	12.4 x 45.1 x 11.3 (314.96 x 1145.5 x 287.02)	50 (22.68)
HVFDSB3C0250G210/U	25 HP	6	NEMA 12	38A	Yes	Yes	12 x 46.5 x 13 (304.8 x 1181.1 x 330.2)	120 (54.43)
HVFDSB3C0250G310/U	25 HP	6	NEMA 3R	38A	Yes	Yes	28.5 x 36 x 12 (723.9 x 914.4 x 304.8)	88 (39.92)
HVFDSB3C0300G110/U	30 HP	6	NEMA 1	46A	Yes	Yes	12.4 x 45.1 x 11.3 (314.96 x 1145.5 x 287.02)	50 (22.68)
HVFDSB3C0300G210/U	30 HP	6	NEMA 12	46A	Yes	Yes	12 x 46.5 x 13 (304.8 x 1181.1 x 330.2)	120 (54.43)
HVFDSB3C0300G310/U	30 HP	6	NEMA 3R	46A	Yes	Yes	28.5 x 36 x 12 (723.9 x 914.4 x 304.8)	88 (39.92)
HVFDSB3C0400G110/U	40 HP	6	NEMA 1	61A	Yes	Yes	12.4 x 45.1 x 11.3 (314.96 x 1145.5 x 287.02)	50 (22.68)
HVFDSB3C0400G210/U	40 HP	6	NEMA 12	61A	Yes	Yes	12 x 46.5 x 13 (304.8 x 1181.1 x 330.2)	136 (61.69)
HVFDSB3C0400G310/U	40 HP	6	NEMA 3R	61A	Yes	Yes	28.5 x 36 x 12 (723.9 x 914.4 x 304.8)	88 (39.92)
HVFDSB3C0500G110/U	50 HP	7	NEMA 1	72A	Yes	Yes	20.8 x 51.5 x 13.2 (528.32 x 1308.1 x 335.28)	100 (45.36)
HVFDSB3C0500G210/U	50 HP	7	NEMA 12	72A	Yes	Yes	16 x 50.5 x 13.5 (406.4 x 1282.7 x 342.9)	145 (65.77)
HVFDSB3C0500G310/U	50 HP	7	NEMA 3R	72A	Yes	Yes	28.5 x 48 x 14 (723.9 x 1219.2 x 355.6)	149 (67.59)

Material Number	Horsepower	Frame Type	Enclosure	Current Ratings	Drive Input Disconnect	Drive Input Fuses	Approximate, Dimensions in. (mm)	Weight lb (kg)
HVFDSB3C0600G110/U	60 HP	7	NEMA 1	87A	Yes	Yes	20.8 x 51.5 x 13.2 (528.32 x 1308.1 x 335.28)	100 (45.36)
HVFDSB3C0600G210/U	60 HP	7	NEMA 12	87A	Yes	Yes	16 x 50.5 x 13.5 (406.4 x 1282.7 x 342.9)	160 (72.57)
HVFDSB3C0600G310/U	60 HP	7	NEMA 3R	87A	Yes	Yes	28.5 x 48 x 14 (723.9 x 1219.2 x 355.6)	149 (67.59)
HVFDSB3C0750G110/U	75 HP	7	NEMA 1	105A	Yes	Yes	20.8 x 51.5 x 13.2 (528.32 x 1308.1 x 335.28)	100 (45.36)
HVFDSB3C0750G210/U	75 HP	7	NEMA 12	105A	Yes	Yes	16 x 50.5 x 13.5 (406.4 x 1282.7 x 342.9)	193 (87.54)
HVFDSB3C0750G310/U	75 HP	7	NEMA 3R	105A	Yes	Yes	28.5 x 48 x 14 (723.9 x 1219.2 x 355.6)	149 (67.59)
HVFDSB3C1000G110/U	100 HP	8	NEMA 1	140A	Yes	Yes	25 x 60 x 16.2 (635 x 1524 x 411.48)	200 (90.72)
HVFDSB3C1000G210/U	100 HP	8	NEMA 12	140A	Yes	Yes	Contact Customer Care	Contact Customer Care
HVFDSB3C1000G310/U	100 HP	8	NEMA 3R	140A	Yes	Yes	40.5 x 60 x 14 (1028.7 x 1524 x 355.6)	340 (154.22)
HVFDSB3C1250G110/U	125 HP	8	NEMA 1	170A	Yes	Yes	25 x 60 x 16.2 (635 x 1524 x 411.48)	200 (90.72)
HVFDSB3C1250G210/U	125 HP	8	NEMA 12	170A	Yes	Yes	Contact Customer Care	Contact Customer Care
HVFDSB3C1250G310/U	125 HP	8	NEMA 3R	170A	Yes	Yes	40.5 x 60 x 14 (1028.7 x 1524 x 355.6)	340 (154.22)
HVFDSB3C1500G110/U	150 HP	8	NEMA 1	205A	Yes	Yes	25 x 60 x 16.2 (635 x 1524 x 411.48)	200 (90.72)
HVFDSB3C1500G210/U	150 HP	8	NEMA 12	205A	Yes	Yes	Contact Customer Care	Contact Customer Care
HVFDSB3C1500G310/U	150 HP	8	NEMA 3R	205A	Yes	Yes	40.5 x 60 x 14 (1028.7 x 1524 x 355.6)	340 (154.22)

SmartVFD HVAC Accessories

Material Number	Description	Used With
32006630-001/U	LON Communications Card (NXOPTC4)	SmartVFD HVAC
HVFDSDBATTERY/U	Battery Package, 5 pcs, for Real Time Clock	SmartVFD HVAC
HVFDCABLE/U	SmartVFD HVAC Commissioning Cable	SmartVFD HVAC and COMPACT
HVFDSDFANFR4/U	SmartVFD HVAC Frame 4 Replacement Fan	SmartVFD HVAC
HVFDSDFANFR5/U	SmartVFD HVAC Frame 5 Replacement Fan	SmartVFD HVAC
HVFDSDFANFR6/U	SmartVFD HVAC Frame 6 Replacement Fan	SmartVFD HVAC
HVFDSDFANFR7/U	SmartVFD HVAC Frame 7 Replacement Fan	SmartVFD HVAC
HVFDSDFLANGEFR4/U	SmartVFD HVAC Flange Mounting Kit for Frame 4	SmartVFD HVAC
HVFDSDFLANGEFR5/U	SmartVFD HVAC Flange Mounting Kit for Frame 5	SmartVFD HVAC
HVFDSDFLANGEFR6/U	SmartVFD HVAC Flange Mounting Kit for Frame 6	SmartVFD HVAC
HVFDSDFLANGEFR7/U	SmartVFD HVAC Flange Mounting Kit for Frame 7	SmartVFD HVAC
HVFDSDGRAPHICKP/U	Replacement Graphical Keypad	SmartVFD HVAC
HVFDSDINSTALLFR4/U	SmartVFD HVAC Replacement Installation Accessories Frame 4	SmartVFD HVAC
HVFDSDINSTALLFR5/U	SmartVFD HVAC Replacement Installation Accessories Frame 5	SmartVFD HVAC
HVFDSDINSTALLFR6/U	SmartVFD HVAC Replacement Installation Accessories Frame 6	SmartVFD HVAC
HVFDSDMOUNTKIT/U	SmartVFD HVAC Panel Mount Kit for NEMA 12 Install 3 Meter Cable	SmartVFD HVAC
HVFDSDNEMA12FR4/U	SmartVFD HVAC NEMA12 Kit Frame 4	SmartVFD HVAC
HVFDSDNEMA12FR5/U	SmartVFD HVAC NEMA12 Kit Frame 5	SmartVFD HVAC
HVFDSDNEMA12FR6/U	SmartVFD HVAC NEMA12 Kit Frame 6	SmartVFD HVAC
HVFDSDOPT1AI2AO/U	1 x AI, 2 x AO (isolated, D- and E-slot compatible)	SmartVFD HVAC
HVFDSDOPT1RO5DI/U	1 x RO, 5 x DI (42-240VAC, D- and E-slot compatible)	SmartVFD HVAC
HVFDSDOPT2RO1T/U	2 x RO + Thermistor (D- and E-slot compatible)	SmartVFD HVAC
HVFDSDOPT3RO/U	3 x RO (D- and E-slot compatible)	SmartVFD HVAC
HVFDSDOPT6DI/U	6 x DI / DO Programmable (D- and E-slot compatible)	SmartVFD HVAC
HVFDSDREP2RO1T/U	2 x RO + Thermistor (B-slot compatible)	SmartVFD HVAC
HVFDSDREP3RO/U	3 x RO (B-slot compatible)	SmartVFD HVAC
HVFDSDTRAINER/U	SmartVFD HVAC Training Demonstration Kit	SmartVFD HVAC

NXS/NXP Series Variable Frequency Drives

Variable Frequency Drives (VFD) accept a control input and then output tailored PWM control signal to operate fans, pumps, etc. with maximum efficiency. The VFD can be field-programmed without any extra devices or computer connections.

- Broad application, simple startup, long life
- Flexible, general purpose, dual rated drives
- Easy programming and commissioning simplify startup
- Easily set parameters using the control panel or the PC tools
- Modular design allows the choice of only the needed functions and features for specific applications
- Bypass options: 2-contactor, 3-contactor, and 3-contactor auto-bypass
- Quick Installation (Startup Wizard, Quick Start Guide, Built-in real time clock)
- Easy multi-line, alpha-numeric keypad interface
- 3-Year warranty
- Seven configurable applications built in.
- Easy commissioning through software or control panel.
- Devices can be wall-mounted or panel-mounted.
- Eleven protective functions (see Form 63-2600, Users Manual, Technical Data sections).
- Compact Size.
- Insulated gate bi-polar transistor (IGBT) technology.
- Modbus, BacNet, Device Net, Profibus, and LobBus available as options cards.

Voltage: 208 Vac; 230 Vac
Bypass: Drive alone
Drive Family: NXS
Type of RFI Filter: Industrial filter
Weight: 11 lb (5.0 kg)
Continuous Output Current: overload 1.5 x High overload current (1min/10min); overload 1.1 x Low overload current (1min/10min)
Starting Torque: 200% High; 150% Low
Peak Current: 2 x high overload current, 2 seconds every 20 seconds
Acceleration time: 0 - 3000 sec
Deceleration time: 0 - 3000 sec
Analog Voltage Input: 0 - 10 Vdc , 200K ohm
Analog Current Input: 0 (4) - 20 mA, 250 ohm differential
Analog Current Output: 0 (4) - 20 mA, max 500 ohm
Digital Output: 50 mA/48v open collector
Reference Output Voltage: +10V, +3%, max 10mA
Auxiliary Voltage: 24V, ± 15%, max 250 mA
Frequency: 0 Hz to 320 Hz
Operating Temperature Range: High Overload 14°F to 122°F, (-10°C to 50°C); Low Overload 14°F to 104°F, (-10°C to 40°C)
Relay Outputs: 24 Vdc/8A; 125 Vdc/0.4A; 250 Vac/8A

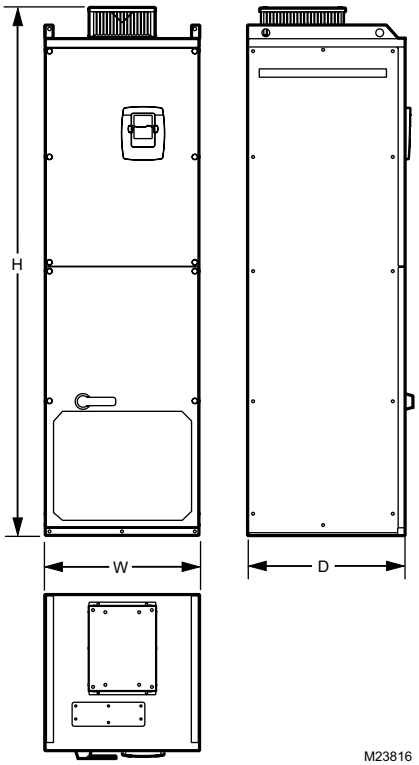

Material Number	Horsepower	Frame Type	Layout	Enclosure	Current Ratings	Approximate, Dimensions in. (mm)	Weight
208 Vac; 230 Vac							
NXS0010B1000/U	1 HP	FR4	Stand-alone drive	NEMA 1	4.8A	5.4 x 11.5 x 7.5 (137.2 x 292.1 x 190.5)	11 lb (5.0 kg)
NXS0010B1208/U	1 HP	FR4	Stand-alone drive	NEMA 12	4.8A	5.4 x 11.5 x 7.5 (137.2 x 292.1 x 190.5)	11 lb (5.0 kg)
NXS0015B1005/U	1.5 HP	FR4	Stand-alone drive	NEMA 1	6.6A	5.4 x 11.5 x 7.5 (137.2 x 292.1 x 190.5)	11 lb (5.0 kg)
NXS0015B1203/U	1.5 HP	FR4	Stand-alone drive	NEMA 12	6.6A	5.4 x 11.5 x 7.5 (137.2 x 292.1 x 190.5)	11 lb (5.0 kg)
NXS0020B1008/U	2 HP	FR4	Stand-alone drive	NEMA 1	7.8A	5.4 x 11.5 x 7.5 (137.2 x 292.1 x 190.5)	11 lb (5.0 kg)
NXS0020B1206/U	2 HP	FR4	Stand-alone drive	NEMA 12	7.8A	5.4 x 11.5 x 7.5 (137.2 x 292.1 x 190.5)	11 lb (5.0 kg)
NXS0030B1006/U	3 HP	FR4	Stand-alone drive	NEMA 1	11A	5.4 x 11.5 x 7.5 (137.2 x 292.1 x 190.5)	11 lb (5.0 kg)
NXS0030B1204/U	3 HP	FR4	Stand-alone drive	NEMA 12	11A	5.4 x 11.5 x 7.5 (137.2 x 292.1 x 190.5)	11 lb (5.0 kg)
NXS0040B1004/U	4 HP	FR4	Stand-alone drive	NEMA 1	12.5A	5.4 x 11.5 x 7.5 (137.2 x 292.1 x 190.5)	17.9 lb (8.1 kg)
NXS0040B1202/U	4 HP	FR4	Stand-alone drive	NEMA 12	12.5A	5.4 x 11.5 x 7.5 (137.2 x 292.1 x 190.5)	17.9 lb (8.1 kg)
NXS0050B1001/U	5 HP	FR5	Stand-alone drive	NEMA 1	17.5A	5.7 x 15.4 x 8.4 (144.8 x 391.2 x 213.4)	17.9 lb (8.1 kg)

Material Number	Horsepower	Frame Type	Layout	Enclosure	Current Ratings	Approximate, Dimensions in. (mm)	Weight
NXS0050B1209/U	5 HP	FR5	Stand-alone drive	NEMA 12	17.5A	5.7 x 15.4 x 8.4 (144.8 x 391.2 x 213.4)	17.9 lb (8.1 kg)
NXS0075B1002/U	7.5 HP	FR5	Stand-alone drive	NEMA 1	25A	5.7 x 15.4 x 8.4 (144.8 x 391.2 x 213.4)	17.9 lb (8.1 kg)
NXS0075B1200/U	7.5 HP	FR5	Stand-alone drive	NEMA 12	25A	5.7 x 15.4 x 8.4 (144.8 x 391.2 x 213.4)	17.9 lb (8.1 kg)
NXS0100B1001/U	10 HP	FR5	Stand-alone drive	NEMA 1	31A	5.7 x 15.4 x 8.4 (144.8 x 391.2 x 213.4)	40.8 lb (18.5 kg)
NXS0100B1209/U	10 HP	FR5	Stand-alone drive	NEMA 12	31A	5.7 x 15.4 x 8.4 (144.8 x 391.2 x 213.4)	40.8 lb (18.5 kg)
NXS0150B1000/U	15 HP	FR6	Stand-alone drive	NEMA 1	48A	7.7 x 20.4 x 9.3 (195.6 x 518.2 x 236.2)	40.8 lb (18.5 kg)
NXS0150B1208/U	15 HP	FR6	Stand-alone drive	NEMA 12	48A	7.7 x 20.4 x 9.3 (195.6 x 518.2 x 236.2)	40.8 lb (18.5 kg)
NXS0200B1000/U	20 HP	FR6	Stand-alone drive	NEMA 1	61A	7.7 x 20.4 x 9.3 (195.6 x 518.2 x 236.2)	77.2 lb (35.0 kg)
NXS0200B1208/U	20 HP	FR6	Stand-alone drive	NEMA 12	61A	7.7 x 20.4 x 9.3 (195.6 x 518.2 x 236.2)	77.2 lb (35.0 kg)
NXS0250B1009/U	25 HP	FR7	Stand-alone drive	NEMA 1	75A	9.3 x 23.3 x 10.1 (236.2 x 519.9 x 256.5)	77.2 lb (35.0 kg)
NXS0250B1207/U	25 HP	FR7	Stand-alone drive	NEMA 12	75A	9.3 x 23.3 x 10.1 (236.2 x 519.9 x 256.5)	77.2 lb (35.0 kg)
NXS0300B1009/U	30 HP	FR7	Stand-alone drive	NEMA 1	88A	9.3 x 23.3 x 10.1 (236.2 x 519.9 x 256.5)	77.2 lb (35.0 kg)
NXS0300B1207/U	30 HP	FR7	Stand-alone drive	NEMA 12	88A	9.3 x 23.3 x 10.1 (236.2 x 519.9 x 256.5)	77.2 lb (35.0 kg)
NXS0400B1008/U	40 HP	FR8	Stand-alone drive	NEMA 1	114A	9.3 x 23.3 x 10.1 (236.2 x 519.9 x 256.5)	127.9 lb (58.0 kg)
NXS0400B1206/U	40 HP	FR8	Stand-alone drive	NEMA 12	114A	11.2 x 28.4 x 12.3 (284.5 x 721.4 x 312.4)	127.9 lb (58.0 kg)
NXS0500B1007/U	50 HP	FR8	Stand-alone drive	NEMA 1	143A	11.2 x 28.4 x 12.3 (284.5 x 721.4 x 312.4)	127.9 lb (58.0 kg)
NXS0500B1205/U	50 HP	FR8	Stand-alone drive	NEMA 12	143A	11.2 x 28.4 x 12.3 (284.5 x 721.4 x 312.4)	127.9 lb (58.0 kg)
NXS0600B1006/U	60 HP	FR8	Stand-alone drive	NEMA 1	169A	11.2 x 28.4 x 12.3 (284.5 x 721.4 x 312.4)	127.9 lb (58.0 kg)
NXS0600B1204/U	60 HP	FR8	Stand-alone drive	NEMA 12	169A	11.2 x 28.4 x 12.3 (284.5 x 721.4 x 312.4)	127.9 lb (58.0 kg)
NXS0750B1004/U	75 HP	FR8	Stand-alone drive	NEMA 1	205A	11.2 x 28.4 x 12.3 (284.5 x 721.4 x 312.4)	127.9 lb (58.0 kg)
NXS0750B1202/U	75 HP	FR8	Stand-alone drive	NEMA 12	205A	11.2 x 28.4 x 12.3 (284.5 x 721.4 x 312.4)	127.9 lb (58.0 kg)
460 Vac							
NXS0015A1007/U	1.5 HP	FR4	Stand-alone drive	NEMA 1	3.3A	5.4 x 11.5 x 7.5 (137.2 x 292.1 x 190.5)	11 lb (5.0 kg)
NXS0015A1205/U	1.5 HP	FR4	Stand-alone drive	NEMA 12	3.3A	5.4 x 11.5 x 7.5 (137.2 x 292.1 x 190.5)	11 lb (5.0 kg)
NXS0020A1000/U	2 HP	FR4	Stand-alone drive	NEMA 1	4.3A	5.4 x 11.5 x 7.5 (137.2 x 292.1 x 190.5)	11 lb (5.0 kg)
NXS0020A1208/U	2 HP	FR4	Stand-alone drive	NEMA 12	4.3A	5.4 x 11.5 x 7.5 (137.2 x 292.1 x 190.5)	11 lb (5.0 kg)
NXS0030A1008/U	3 HP	FR4	Stand-alone drive	NEMA 1	5.6A	5.4 x 11.5 x 7.5 (137.2 x 292.1 x 190.5)	11 lb (5.0 kg)
NXS0030A1206/U	3 HP	FR4	Stand-alone drive	NEMA 12	5.6A	5.4 x 11.5 x 7.5 (137.2 x 292.1 x 190.5)	11 lb (5.0 kg)
NXS0040A1006/U	4 HP	FR4	Stand-alone drive	NEMA 1	7.6A	5.4 x 11.5 x 7.5 (137.2 x 292.1 x 190.5)	11 lb (5.0 kg)
NXS0040A1204/U	4 HP	FR4	Stand-alone drive	NEMA 12	7.6A	5.4 x 11.5 x 7.5 (137.2 x 292.1 x 190.5)	11 lb (5.0 kg)
NXS0050A1003/U	5 HP	FR4	Stand-alone drive	NEMA 1	9A	5.4 x 11.5 x 7.5 (137.2 x 292.1 x 190.5)	11 lb (5.0 kg)
NXS0050A1201/U	5 HP	FR4	Stand-alone drive	NEMA 12	9A	5.4 x 11.5 x 7.5 (137.2 x 292.1 x 190.5)	11 lb (5.0 kg)
NXS0075A1004/U	7.5 HP	FR4	Stand-alone drive	NEMA 1	12A	5.4 x 11.5 x 7.5 (137.2 x 292.1 x 190.5)	11 lb (5.0 kg)
NXS0075A1202/U	7.5 HP	FR4	Stand-alone drive	NEMA 12	12A	5.4 x 11.5 x 7.5 (137.2 x 292.1 x 190.5)	11 lb (5.0 kg)
NXS0100A1003/U	10 HP	FR5	Stand-alone drive	NEMA 1	16A	5.7 x 15.4 x 8.4 (144.8 x 391.2 x 213.4)	17.9 lb (8.1 kg)
NXS0100A1201/U	10 HP	FR5	Stand-alone drive	NEMA 12	16A	5.7 x 15.4 x 8.4 (144.8 x 391.2 x 213.4)	17.9 lb (8.1 kg)
NXS0150A1002/U	15 HP	FR5	Stand-alone drive	NEMA 1	23A	5.7 x 15.4 x 8.4 (144.8 x 391.2 x 213.4)	17.9 lb (8.1 kg)
NXS0150A1200/U	15 HP	FR5	Stand-alone drive	NEMA 12	23A	5.7 x 15.4 x 8.4 (144.8 x 391.2 x 213.4)	17.9 lb (8.1 kg)
NXS0200A1002/U	20 HP	FR5	Stand-alone drive	NEMA 1	31A	5.7 x 15.4 x 8.4 (144.8 x 391.2 x 213.4)	17.9 lb (8.1 kg)
NXS0200A1200/U	20 HP	FR5	Stand-alone drive	NEMA 12	31A	5.7 x 15.4 x 8.4 (144.8 x 391.2 x 213.4)	17.9 lb (8.1 kg)
NXS0250A1001/U	25 HP	FR6	Stand-alone drive	NEMA 1	38A	7.7 x 20.4 x 9.3 (195.6 x 518.2 x 236.2)	40.8 lb (18.5 kg)
NXS0250A1209/U	25 HP	FR6	Stand-alone drive	NEMA 12	38A	7.7 x 20.4 x 9.3 (195.6 x 518.2 x 236.2)	40.8 lb (18.5 kg)
NXS0300A1001/U	30 HP	FR6	Stand-alone drive	NEMA 1	46A	7.7 x 20.4 x 9.3 (195.6 x 518.2 x 236.2)	40.8 lb (18.5 kg)
NXS0300A1209/U	30 HP	FR6	Stand-alone drive	NEMA 12	46A	7.7 x 20.4 x 9.3 (195.6 x 518.2 x 236.2)	40.8 lb (18.5 kg)
NXS0400A1000/U	40 HP	FR6	Stand-alone drive	NEMA 1	61A	7.7 x 20.4 x 9.3 (195.6 x 518.2 x 236.2)	40.8 lb (18.5 kg)
NXS0400A1208/U	40 HP	FR6	Stand-alone drive	NEMA 12	61A	7.7 x 20.4 x 9.3 (195.6 x 518.2 x 236.2)	40.8 lb (18.5 kg)
NXS0500A1009/U	50 HP	FR7	Stand-alone drive	NEMA 1	72A	9.3 x 23.3 x 10.1 (236.2 x 519.9 x 256.5)	77.2 lb (35.0 kg)
NXS0500A1207/U	50 HP	FR7	Stand-alone drive	NEMA 12	72A	9.3 x 23.3 x 10.1 (236.2 x 519.9 x 256.5)	77.2 lb (35.0 kg)
NXS0600A1008/U	60 HP	FR7	Stand-alone drive	NEMA 1	87A	9.3 x 23.3 x 10.1 (236.2 x 519.9 x 256.5)	77.2 lb (35.0 kg)
NXS0600A1206/U	60 HP	FR7	Stand-alone drive	NEMA 12	87A	9.3 x 23.3 x 10.1 (236.2 x 519.9 x 256.5)	77.2 lb (35.0 kg)
NXS0750A1006/U	75 HP	FR7	Stand-alone drive	NEMA 1	105A	9.3 x 23.3 x 10.1 (236.2 x 519.9 x 256.5)	77.2 lb (35.0 kg)
NXS0750A1204/U	75 HP	FR7	Stand-alone drive	NEMA 12	105A	9.3 x 23.3 x 10.1 (236.2 x 519.9 x 256.5)	77.2 lb (35.0 kg)
NXS1000A1002/U	100 HP	FR8	Stand-alone drive	NEMA 1	140A	11.2 x 28.4 x 12.3 (284.5 x 721.4 x 312.4)	127.9 lb (58.0 kg)
NXS1000A1200/U	100 HP	FR8	Stand-alone drive	NEMA 12	140A	11.2 x 28.4 x 12.3 (284.5 x 721.4 x 312.4)	127.9 lb (58.0 kg)
NXS1250A1009/U	125 HP	FR8	Stand-alone drive	NEMA 1	170A	11.2 x 28.4 x 12.3 (284.5 x 721.4 x 312.4)	127.9 lb (58.0 kg)
NXS1250A1207/U	125 HP	FR8	Stand-alone drive	NEMA 12	170A	11.2 x 28.4 x 12.3 (284.5 x 721.4 x 312.4)	127.9 lb (58.0 kg)
NXS1500A1007/U	150 HP	FR8	Stand-alone drive	NEMA 1	205A	11.2 x 28.4 x 12.3 (284.5 x 721.4 x 312.4)	127.9 lb (58.0 kg)
NXS1500A1205/U	150 HP	FR8	Stand-alone drive	NEMA 12	205A	11.2 x 28.4 x 12.3 (284.5 x 721.4 x 312.4)	127.9 lb (58.0 kg)
NXS2000A1000/U	200 HP	FR9	Stand-alone drive	NEMA 1	261A	18.9 x 45.3 x 14.3 (480 x 1150 x 362)	321.9 lb (146.0 kg)
NXS2500A1005/U	250 HP	FR9	Stand-alone drive	NEMA 1	300A	18.9 x 45.3 x 14.3 (480 x 1150 x 362)	321.9 lb (146.0 kg)
NXP3000A1003/U	300 HP	FR10	Stand-alone drive	NEMA 1	385A	23.4 x 79.5 x 23.7 (595 x 2018 x 602)	595.25 lb (270.0 kg)
NXP3500A1008/U	350 HP	FR10	Stand-alone drive	NEMA 1	460A	23.4 x 79.5 x 23.7 (595 x 2018 x 602)	595.25 lb (270.0 kg)
NXP4500A1006/U	450 HP	FR10	Stand-alone drive	NEMA 1	520A	23.4 x 79.5 x 23.7 (595 x 2018 x 602)	595.25 lb (270.0 kg)

Material Number	Horsepower	Frame Type	Layout	Enclosure	Current Ratings	Approximate, Dimensions in. (mm)	Weight
600 Vac							
NXS0030C1004/U	3 HP	FR6	Stand-alone drive	NEMA 1	4.5A	7.7 x 20.4 x 9.3 (195 x 519 x 237)	40.8 lb (18.5 kg)
NXS0030C1202/U	3 HP	FR6	Stand-alone drive	NEMA 12	4.5A	7.7 x 20.4 x 9.3 (195 x 519 x 237)	40.8 lb (18.5 kg)
NXS0040C1002/U	4 HP	FR6	Stand-alone drive	NEMA 1	5.5A	7.7 x 20.4 x 9.3 (195 x 519 x 237)	40.8 lb (18.5 kg)
NXS0040C1200/U	4 HP	FR6	Stand-alone drive	NEMA 12	5.5A	7.7 x 20.4 x 9.3 (195 x 519 x 237)	40.8 lb (18.5 kg)
NXS0050C1009/U	5 HP	FR6	Stand-alone drive	NEMA 1	7.5A	7.7 x 20.4 x 9.3 (195 x 519 x 237)	40.8 lb (18.5 kg)
NXS0050C1207/U	5 HP	FR6	Stand-alone drive	NEMA 12	7.5A	7.7 x 20.4 x 9.3 (195 x 519 x 237)	40.8 lb (18.5 kg)
NXS0075C1000/U	7.5 HP	FR6	Stand-alone drive	NEMA 1	10A	7.7 x 20.4 x 9.3 (195 x 519 x 237)	40.8 lb (18.5 kg)
NXS0075C1208/U	7.5 HP	FR6	Stand-alone drive	NEMA 12	10A	7.7 x 20.4 x 9.3 (195 x 519 x 237)	40.8 lb (18.5 kg)
NXS0100C1009/U	10 HP	FR6	Stand-alone drive	NEMA 1	13.5A	7.7 x 20.4 x 9.3 (195 x 519 x 237)	40.8 lb (18.5 kg)
NXS0100C1207/U	10 HP	FR6	Stand-alone drive	NEMA 12	13.5A	7.7 x 20.4 x 9.3 (195 x 519 x 237)	40.8 lb (18.5 kg)
NXS0150C1008/U	15 HP	FR6	Stand-alone drive	NEMA 1	18A	7.7 x 20.4 x 9.3 (195.6 x 518.2 x 236.2)	40.8 lb (18.5 kg)
NXS0150C1206/U	15 HP	FR6	Stand-alone drive	NEMA 12	18A	7.7 x 20.4 x 9.3 (195.6 x 518.2 x 236.2)	40.8 lb (18.5 kg)
NXS0200C1008/U	20 HP	FR6	Stand-alone drive	NEMA 1	22A	7.7 x 20.4 x 9.3 (195.6 x 518.2 x 236.2)	40.8 lb (18.5 kg)
NXS0200C1206/U	20 HP	FR6	Stand-alone drive	NEMA 12	22A	7.7 x 20.4 x 9.3 (195.6 x 518.2 x 236.2)	40.8 lb (18.5 kg)
NXS0250C1007/U	25 HP	FR6	Stand-alone drive	NEMA 1	27A	7.7 x 20.4 x 9.3 (195.6 x 518.2 x 236.2)	40.8 lb (18.5 kg)
NXS0250C1205/U	25 HP	FR6	Stand-alone drive	NEMA 12	27A	7.7 x 20.4 x 9.3 (195.6 x 518.2 x 236.2)	40.8 lb (18.5 kg)
NXS0300C1007/U	30 HP	FR6	Stand-alone drive	NEMA 1	34A	7.7 x 20.4 x 9.3 (195.6 x 518.2 x 236.2)	40.8 lb (18.5 kg)
NXS0300C1205/U	30 HP	FR6	Stand-alone drive	NEMA 12	34A	7.7 x 20.4 x 9.3 (195.6 x 518.2 x 236.2)	40.8 lb (18.5 kg)
NXS0400C1006/U	40 HP	FR7	Stand-alone drive	NEMA 1	41A	16 x 62 x 12 (406 x 1575 x 330)	77.2 lb (35.0 kg)
NXS0400C1204/U	40 HP	FR7	Stand-alone drive	NEMA 12	41A	9.3 x 23.3 x 10.1 (236.2 x 519.9 x 256.5)	77.2 lb (35.0 kg)
NXS0500C1005/U	50 HP	FR7	Stand-alone drive	NEMA 1	52A	16 x 62 x 12 (406 x 1575 x 330)	77.2 lb (35.0 kg)
NXS0500C1203/U	50 HP	FR7	Stand-alone drive	NEMA 12	52A	16 x 62 x 12 (406 x 1575 x 330)	77.2 lb (35.0 kg)
NXS0600C1004/U	60 HP	FR8	Stand-alone drive	NEMA 1	62A	11.2 x 28.4 x 12.3 (284.5 x 721.4 x 312.4)	127.9 lb (58.0 kg)
NXS0600C1202/U	60 HP	FR8	Stand-alone drive	NEMA 12	62A	11.2 x 28.4 x 12.3 (284.5 x 721.4 x 312.4)	127.9 lb (58.0 kg)
NXS0750C1002/U	75 HP	FR8	Stand-alone drive	NEMA 1	80A	11.2 x 28.4 x 12.3 (284.5 x 721.4 x 312.4)	127.9 lb (58.0 kg)
NXS0750C1200/U	75 HP	FR8	Stand-alone drive	NEMA 12	80A	11.2 x 28.4 x 12.3 (284.5 x 721.4 x 312.4)	127.9 lb (58.0 kg)
NXS1000C1008/U	100 HP	FR8	Stand-alone drive	NEMA 1	100A	11.2 x 28.4 x 12.3 (284.5 x 721.4 x 312.4)	127.9 lb (58.0 kg)
NXS1000C1206/U	100 HP	FR8	Stand-alone drive	NEMA 12	100A	11.2 x 28.4 x 12.3 (284.5 x 721.4 x 312.4)	127.9 lb (58.0 kg)
NXS1250C1005/U	125 HP	FR9	Stand-alone drive	NEMA 1	125A	18.9 x 45.3 x 14.3 (480 x 1150 x 362)	321.9 lb (146.0 kg)
NXS1250C1203/U	125 HP	FR9	Stand-alone drive	NEMA 12	125A	18.9 x 45.3 x 14.3 (480 x 1150 x 362)	321.9 lb (146.0 kg)
NXS1500C1003/U	150 HP	FR9	Stand-alone drive	NEMA 1	144A	18.9 x 45.3 x 14.3 (480 x 1150 x 362)	321.9 lb (146.0 kg)
NXS1500C1201/U	150 HP	FR9	Stand-alone drive	NEMA 12	144A	18.9 x 45.3 x 14.3 (480 x 1150 x 362)	321.9 lb (146.0 kg)
NXS2000C1006/U	200 HP	FR9	Stand-alone drive	NEMA 1	208A	18.9 x 45.3 x 14.3 (480 x 1150 x 362)	321.9 lb (146.0 kg)
NXS2000C1204/U	200 HP	FR9	Stand-alone drive	NEMA 12	208A	18.9 x 45.3 x 14.3 (480 x 1150 x 362)	321.9 lb (146.0 kg)

NX Series Drives with Bypass and/or Disconnect

Variable Frequency Drives (VFD) accept a control input and then output tailored PWM control signal to operate (motors, fans, pumps, etc.) with maximum efficiency. The VFD can be field programmed without any extra devices or computer connections.

The NXS/NXP series of drives are available with a diverse offering of bypass options to complement the NXS/NXP family.

Our five configurations make it easy to select the right bypass to complete your drive package. All bundles are available in NEMA 1, NEMA 12 and ventilated NEMA 3R.

NXS/NXP Disconnect Option
- Adds a fused disconnect to the VFD NXS/NXP 2-Contactor Bypass Option Provides an economical means of bypassing the VFD.
- No Main Disconnect
- Freeze/Fire/Smoke Interlock NXS/NXP 3-Contactor Bypass Option During commissioning, the TEST position enables power-up of the VFD without sending power to the motor.
- In Bypass mode, the VFD is isolated from the power supply
- Fused Disconnect
- Freeze/Fire/Smoke Interlock NXS/NXP 3-Contactor Auto-Bypass Option

All the features of the 3-Contactor bypass plus:
- Any VFD fault will automatically send the bypass to bypass mode
- A contact closure sends the bypass to bypass mode
- Dry contacts indicate when the bypass is in bypass mode, alerting the building management system mode, alerting the building management system

Enclosure: NEMA 3R
Drive Family: NXS
Disconnect Type: No Disconnect
Pilot Lights: No
Control Transformer: No
Drive Input Disconnect: No
Drive Input Fuses: No
Type of RFI Filter: Industrial filter
Weight: 54 lb (118.8 kg)
Continuous Output Current: overload 1.5 x High overload current (1min/10min); overload 1.1 x Low overload current (1min/10min)
Starting Torque: 200% High; 150% Low
Peak Current: 2 x high overload current, 2 seconds every 20 seconds

Acceleration time: 0 - 3000 sec
Deceleration time: 0 - 3000 sec
Analog Voltage Input: 0 - 10 Vdc , 200K ohm
Analog Current Input: 0 (4) - 20 mA, 250 ohm differential
Analog Current Output: 0 (4) - 20 mA, max 500 ohm
Digital Output: 50 mA/48v open collector
Reference Output Voltage: +10V, +3%, max 10mA
Auxiliary Voltage: 24V, ± 15%, max 250 mA
Frequency: 0 Hz to 320 Hz
Operating Temperature Range: High Overload 14 to 122; Low Overload 14 to 104 (High Overload -10 to 50; Low Overload -10 to 40)
Relay Outputs: 24 Vdc/8A; 125 Vdc/0.4A; 250 Vac/8A

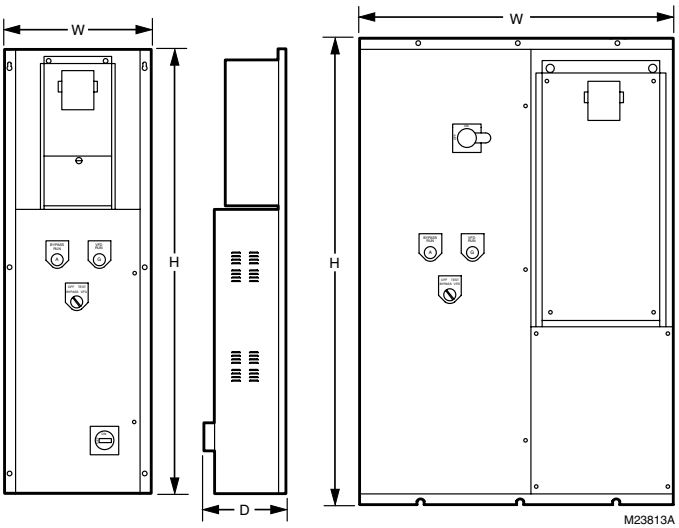

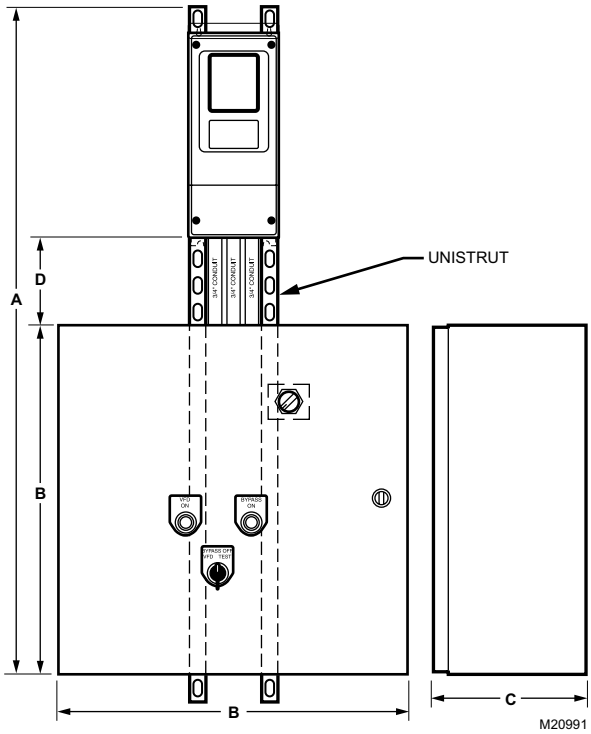

Material Number	Horsepower	Frame Type	Layout	Auto Bypass	Additional Features	Current Ratings	Approximate, Dimensions in. (mm)	Weight
208 Vac — Drive alone								
NXBK0010CS30000000	1 HP	FR4	Vertical	No		4.8A	24H x 10D x 20W (588H x 245D x 490W)	54 lb (118.8 kg)
NXBK0015CS30000000	1.5 HP	FR4	Vertical	No		6.6A	24H x 10D x 20W (588H x 245D x 490W)	54 lb (118.8 kg)
NXBK0020CS30000000	2 HP	FR4	Vertical	No		7.8A	24H x 10D x 20W (588H x 245D x 490W)	54 lb (118.8 kg)
NXBK0030CS30000000	3 HP	FR4	Vertical	No		11A	24H x 10D x 20W (588H x 245D x 490W)	54 lb (118.8 kg)
NXBK0040CS30000000	4 HP	FR4	Vertical	No		12.5A	24H x 10D x 20W (588H x 245D x 490W)	54 lb (118.8 kg)
NXBK0050CS30000000	5 HP	FR5	Vertical	No		17.5A	30H x 10D x 24W (735H x 245D x 588W)	78 lb (171.6 kg)
NXBK0075CS30000000	7.5 HP	FR5	Vertical	No		25A	30H x 10D x 24W (735H x 245D x 588W)	78 lb (171.6 kg)
NXBK0100CS30000000	10 HP	FR5	Vertical	No		31A	30H x 10D x 24W (735H x 245D x 588W)	78 lb (171.6 kg)
NXBK0150CS30000000	15 HP	FR6	Vertical	No		48A	36H x 12D x 30W (882H x 294D x 735W)	124 lb (272.8 kg)
NXBK0200CS30000000	20 HP	FR6	Vertical	No		61A	36H x 12D x 30W (882H x 294D x 735W)	124 lb (272.8 kg)
NXBK0250CS30000000	25 HP	FR7	Vertical	No		75A	48H x 12D x 36W (1176H x 294D x 882W)	193 lb (424.6 kg)
NXBK0300CS30000000	30 HP	FR7	Vertical	No		88A	48H x 12D x 36W (1176H x 294D x 882W)	193 lb (424.6 kg)
NXBK0400CS30000000	40 HP	FR7	Vertical	No		114A	48H x 12D x 36W (1176H x 294D x 882W)	193 lb (424.6 kg)
208 Vac — Drive with 2 contactor bypass								
NXBK0010CS10200000	1 HP	FR4	Vertical	No		4.8A	40H x 9.5D x 9.5W (1016H x 241D x 231W)	43 lb (94.6 kg)
NXBK0010CS20200000	1 HP	FR4	Vertical	No		4.8A	36H x 10D x 16W (882H x 245D x 392W)	53 lb (116.6 kg)
NXBK0010CS30200000	1 HP	FR4	Vertical	No		4.8A	24H x 10D x 20W (588H x 245D x 490W)	54 lb (118.8 kg)
NXBK0015CS10200000	1.5 HP	FR4	Vertical	No		6.6A	9.5 x 40 x 9.5 (237.5 x 1000 x 237.5)	43 lb (19.5 kg)
NXBK0015CS20200000	1.5 HP	FR4	Vertical	No		6.6A	9.5 x 40 x 9.5 (237.5 x 1000 x 237.5)	43 lb (19.5 kg)
NXBK0020CS10200000	2 HP	FR4	Vertical	No		7.8A	9.5 x 40 x 9.5 (237.5 x 1000 x 237.5)	43 lb (19.5 kg)
NXBK0020CS20200000	2 HP	FR4	Vertical	No		7.8A	9.5 x 40 x 9.5 (237.5 x 1000 x 237.5)	43 lb (19.5 kg)
NXBK0020CS30200000	2 HP	FR4	Vertical	No		7.8A	24H x 10D x 20W (588H x 245D x 490W)	54 lb (118.8 kg)
NXBK0030CS10200000	3 HP	FR4	Vertical	No		0.46A	9.5 x 40 x 9.5 (237.5 x 1000 x 237.5)	43 lb (19.5 kg)
NXBK0030CS20200000	3 HP	FR4	Vertical	No		0.46A	9.5 x 40 x 9.5 (237.5 x 1000 x 237.5)	43 lb (19.5 kg)
NXBK0040CS10200000	4 HP	FR4	Vertical	No		12.5A	9.5 x 40 x 9.5 (237.5 x 1000 x 237.5)	43 lb (19.5 kg)
NXBK0040CS20200000	4 HP	FR4	Vertical	No		12.5A	9.5 x 40 x 9.5 (237.5 x 1000 x 237.5)	43 lb (19.5 kg)
NXBK0050CS10200000	5 HP	FR5	Vertical	No		17.5A	11 x 46 x 10.5 (275 x 1150 x 262.5)	62 lb (28.1 kg)
NXBK0050CS20200000	5 HP	FR5	Vertical	No		17.5A	11 x 46 x 10.5 (275 x 1150 x 262.5)	62 lb (28.1 kg)
NXBK0075CS10200000	7.5 HP	FR5	Vertical	No		25A	11 x 46 x 10.5 (275 x 1150 x 262.5)	62 lb (28.1 kg)
NXBK0075CS20200000	7.5 HP	FR5	Vertical	No		25A	11 x 46 x 10.5 (275 x 1150 x 262.5)	62 lb (28.1 kg)
NXBK0075CS30200000	7.5 HP	FR5	Vertical	No		25A	30H x 10D x 24W (735H x 245D x 588W)	78 lb (171.6 kg)
NXBK0100CS10200000	10 HP	FR5	Vertical	No		31A	11 x 46 x 10.5 (275 x 1150 x 262.5)	62 lb (28.1 kg)
NXBK0100CS20200000	10 HP	FR5	Vertical	No		31A	11 x 46 x 10.5 (275 x 1150 x 262.5)	62 lb (28.1 kg)
NXBK0150CS10200000	15 HP	FR6	Vertical	No		48A	14 x 53 x 12 (350 x 1325 x 300)	99 lb (44.9 kg)
NXBK0150CS20200000	15 HP	FR6	Vertical	No		48A	14 x 53 x 12 (350 x 1325 x 300)	99 lb (44.9 kg)
NXBK0200CS10200000	20 HP	FR6	Vertical	No		61A	14 x 53 x 12 (350 x 1325 x 300)	99 lb (44.9 kg)
NXBK0200CS20200000	20 HP	FR6	Vertical	No		61A	14 x 53 x 12 (350 x 1325 x 300)	99 lb (44.9 kg)
NXBK0250CS10200000	25 HP	FR7	Vertical	No		75A	16 x 62 x 13 (400 x 1550 x 325)	154 lb (69.8 kg)
NXBK0250CS20200000	25 HP	FR7	Vertical	No		75A	16 x 62 x 13 (400 x 1550 x 325)	154 lb (69.8 kg)
NXBK0250CS30200000	25 HP	FR7	Vertical	No		75A	48H x 12D x 36W (1176H x 294D x 882W)	193 lb (424.6 kg)
NXBK0300CS10200000	30 HP	FR7	Vertical	No		88A	16 x 62 x 13 (400 x 1550 x 325)	154 lb (69.8 kg)
NXBK0300CS20200000	30 HP	FR7	Vertical	No		88A	16 x 62 x 13 (400 x 1550 x 325)	154 lb (69.8 kg)
NXBK0400CS10200000	40 HP	FR8	Side by Side	No		114A	36 x 54 x 16 (914.4 x 1371.6 x 406.4)	360 lb (163.3 kg)
NXBK0400CS20200000	40 HP	FR8	Side by Side	No		114A	36 x 54 x 16 (914.4 x 1371.6 x 406.4)	360 lb (163.3 kg)
NXBK0500CS10200000	50 HP	FR8	Side by Side	No		140A	36 x 54 x 16 (914.4 x 1371.6 x 406.4)	360 lb (163.3 kg)
NXBK0500CS20200000	50 HP	FR8	Side by Side	No		140A	36 x 54 x 16 (914.4 x 1371.6 x 406.4)	360 lb (163.3 kg)
NXBK0600CS10200000	60 HP	FR8	Side by Side	No		170A	36 x 54 x 16 (914.4 x 1371.6 x 406.4)	360 lb (163.3 kg)
NXBK0600CS20200000	60 HP	FR8	Side by Side	No		170A	36 x 54 x 16 (914.4 x 1371.6 x 406.4)	360 lb (163.3 kg)
NXBK0600CS30200000	60 HP	FR8	Side by Side	No		170A	60H x 14D x 36W (1470H x 343D x 882W)	440 lb (968 kg)
NXBK0750CS10200000	75 HP	FR8	Side by Side	No		205A	36 x 54 x 16 (914.4 x 1371.6 x 406.4)	360 lb (163.3 kg)
NXBK0750CS20200000	75 HP	FR8	Side by Side	No		205A	36 x 54 x 16 (914.4 x 1371.6 x 406.4)	360 lb (163.3 kg)
NXBK0750CS21200000	75 HP	FR8	Side by Side	Yes		205A	48H x 14D x 36W (1176H x 343D x 882W)	350 lb (770 kg)
208 Vac — Drive with 3 contactor bypass								
NXBK0010CS103F1110	1 HP	FR4	Vertical	No		4.8A	40H x 9.5D x 9.5W (1016H x 241D x 231W)	43 lb (94.6 kg)
NXBK0010CS113F1110	1 HP	FR4	Vertical	Yes		4.8A	40H x 9.5D x 9.5W (1016H x 241D x 231W)	43 lb (94.6 kg)
NXBK0010CS203F1110	1 HP	FR4	Vertical	No		4.8A	36H x 10D x 16W (882H x 245D x 392W)	53 lb (116.6 kg)
NXBK0010CS213F1110	1 HP	FR4	Vertical	Yes		4.8A	36H x 10D x 16W (882H x 245D x 392W)	53 lb (116.6 kg)
NXBK0010CS303F1110	1 HP	FR4	Vertical	No		4.8A	24H x 10D x 20W (588H x 245D x 490W)	54 lb (118.8 kg)
NXBK0010CS313F1110	1 HP	FR4	Vertical	Yes		4.8A	24H x 10D x 20W (588H x 245D x 490W)	54 lb (118.8 kg)
NXBK0015CS103F1110	1.5 HP	FR4	Vertical	No		6.6A	9.5 x 40 x 9.5 (237.5 x 1000 x 237.5)	43 lb (19.5 kg)
NXBK0015CS113F1110	1.5 HP	FR4	Vertical	Yes		6.6A	40H x 9.5D x 9.5W (1016H x 241D x 231W)	43 lb (94.6 kg)
NXBK0015CS203F1110	1.5 HP	FR4	Vertical	No		6.6A	9.5 x 40 x 9.5 (237.5 x 1000 x 237.5)	43 lb (19.5 kg)

Material Number	Horsepower	Frame Type	Layout	Auto Bypass	Additional Features	Current Ratings	Approximate, Dimensions in. (mm)	Weight
NXBK0015CS213F1110	1.5 HP	FR4	Vertical	Yes		6.6A	36H x 10D x 16W (882H x 245D x 392W)	53 lb (116.6 kg)
NXBK0015CS303F1110	1.5 HP	FR4	Vertical	No		6.6A	24H x 10D x 20W (588H x 245D x 490W)	54 lb (118.8 kg)
NXBK0015CS313F1110	1.5 HP	FR4	Vertical	Yes		6.6A	24H x 10D x 20W (588H x 245D x 490W)	54 lb (118.8 kg)
NXBK0020CS103F1110	2 HP	FR4	Vertical	No		7.8A	9.5 x 40 x 9.5 (237.5 x 1000 x 237.5)	43 lb (19.5 kg)
NXBK0020CS113F1110	2 HP	FR4	Vertical	Yes		7.8A	40H x 9.5D x 9.5W (1016H x 241D x 231W)	43 lb (94.6 kg)
NXBK0020CS203F1110	2 HP	FR4	Vertical	No		7.8A	9.5 x 40 x 9.5 (237.5 x 1000 x 237.5)	43 lb (19.5 kg)
NXBK0020CS213F1110	2 HP	FR4	Vertical	Yes		7.8A	36H x 10D x 16W (882H x 245D x 392W)	53 lb (116.6 kg)
NXBK0020CS303F1110	2 HP	FR4	Vertical	No		7.8A	24H x 10D x 20W (588H x 245D x 490W)	54 lb (118.8 kg)
NXBK0020CS313F1110	2 HP	FR4	Vertical	Yes		7.8A	24H x 10D x 20W (588H x 245D x 490W)	54 lb (118.8 kg)
NXBK0030CS103F1110	3 HP	FR4	Vertical	No		0.46A	9.5 x 40 x 9.5 (237.5 x 1000 x 237.5)	43 lb (19.5 kg)
NXBK0030CS113F1110	3 HP	FR4	Vertical	Yes		11A	40H x 9.5D x 9.5W (1016H x 241D x 231W)	43 lb (94.6 kg)
NXBK0030CS203F1110	3 HP	FR4	Vertical	No		0.46A	9.5 x 40 x 9.5 (237.5 x 1000 x 237.5)	43 lb (19.5 kg)
NXBK0030CS213F1110	3 HP	FR4	Vertical	Yes		11A	36H x 10D x 16W (882H x 245D x 392W)	53 lb (116.6 kg)
NXBK0030CS303F1110	3 HP	FR4	Vertical	No		11A	24H x 10D x 20W (588H x 245D x 490W)	54 lb (118.8 kg)
NXBK0030CS313F1110	3 HP	FR4	Vertical	Yes		11A	24H x 10D x 20W (588H x 245D x 490W)	54 lb (118.8 kg)
NXBK0040CS103F1110	4 HP	FR4	Vertical	No		12.5A	9.5 x 40 x 9.5 (237.5 x 1000 x 237.5)	43 lb (19.5 kg)
NXBK0040CS113F1110	4 HP	FR4	Vertical	Yes		12.5A	40H x 9.5D x 9.5W (1016H x 241D x 231W)	43 lb (94.6 kg)
NXBK0040CS203F1110	4 HP	FR4	Vertical	No		12.5A	9.5 x 40 x 9.5 (237.5 x 1000 x 237.5)	43 lb (19.5 kg)
NXBK0040CS213F1110	4 HP	FR4	Vertical	Yes		12.5A	36H x 10D x 16W (882H x 245D x 392W)	53 lb (116.6 kg)
NXBK0040CS303F1110	4 HP	FR4	Vertical	No		12.5A	24H x 10D x 20W (588H x 245D x 490W)	54 lb (118.8 kg)
NXBK0040CS313F1110	4 HP	FR4	Vertical	Yes		12.5A	24H x 10D x 20W (588H x 245D x 490W)	54 lb (118.8 kg)
NXBK0050CS103F1110	5 HP	FR5	Vertical	No		17.5A	11 x 46 x 10.5 (275 x 1150 x 262.5)	62 lb (28.1 kg)
NXBK0050CS113F1110	5 HP	FR5	Vertical	Yes		17.5A	46H x 10.5D x 11W (1168H x 257D x 279W)	62 lb (136.4 kg)
NXBK0050CS203F1110	5 HP	FR5	Vertical	No		17.5A	11 x 46 x 10.5 (275 x 1150 x 262.5)	62 lb (28.1 kg)
NXBK0050CS213F1110	5 HP	FR5	Vertical	Yes		17.5A	36H x 10D x 16W (882H x 245D x 392W)	64 lb (140.8 kg)
NXBK0050CS303F1110	5 HP	FR5	Vertical	No		17.5A	30H x 10D x 24W (735H x 245D x 588W)	78 lb (171.6 kg)
NXBK0050CS313F1110	5 HP	FR5	Vertical	Yes		17.5A	30H x 10D x 24W (735H x 245D x 588W)	78 lb (171.6 kg)
NXBK0075CS103F1110	7.5 HP	FR5	Vertical	No		25A	11 x 46 x 10.5 (275 x 1150 x 262.5)	62 lb (28.1 kg)
NXBK0075CS113F1110	7.5 HP	FR5	Vertical	Yes		25A	46H x 10.5D x 11W (1168H x 257D x 279W)	62 lb (136.4 kg)
NXBK0075CS203F1110	7.5 HP	FR5	Vertical	No		25A	11 x 46 x 10.5 (275 x 1150 x 262.5)	62 lb (28.1 kg)
NXBK0075CS213F1110	7.5 HP	FR5	Vertical	Yes		25A	36H x 10D x 16W (882H x 245D x 392W)	64 lb (140.8 kg)
NXBK0075CS303F1110	7.5 HP	FR5	Vertical	No		25A	30H x 10D x 24W (735H x 245D x 588W)	78 lb (171.6 kg)
NXBK0075CS313F1110	7.5 HP	FR5	Vertical	Yes		25A	30H x 10D x 24W (735H x 245D x 588W)	78 lb (171.6 kg)
NXBK0100CS103F1110	10 HP	FR5	Vertical	No		31A	11 x 46 x 10.5 (275 x 1150 x 262.5)	62 lb (28.1 kg)
NXBK0100CS113F1110	10 HP	FR5	Vertical	Yes		31A	46H x 10.5D x 11W (1168H x 257D x 279W)	62 lb (136.4 kg)
NXBK0100CS203F1110	10 HP	FR5	Vertical	No		31A	11 x 46 x 10.5 (275 x 1150 x 262.5)	62 lb (28.1 kg)
NXBK0100CS213F1110	10 HP	FR5	Vertical	Yes		31A	44H x 10D x 16W (1078H x 245D x 392W)	70 lb (154 kg)
NXBK0100CS303F1110	10 HP	FR5	Vertical	No		31A	30H x 10D x 24W (735H x 245D x 588W)	78 lb (171.6 kg)
NXBK0100CS313F1110	10 HP	FR5	Vertical	Yes		31A	30H x 10D x 24W (735H x 245D x 588W)	78 lb (171.6 kg)
NXBK0150CS103F1110	15 HP	FR6	Vertical	No		48A	14 x 53 x 12 (350 x 1325 x 300)	99 lb (44.9 kg)
NXBK0150CS113F1110	15 HP	FR6	Vertical	Yes		48A	53H x 12D x 14W (1298H x 294D x 343W)	99 lb (217.8 kg)
NXBK0150CS203F1110	15 HP	FR6	Vertical	No		48A	14 x 53 x 12 (350 x 1325 x 300)	99 lb (44.9 kg)
NXBK0150CS213F1110	15 HP	FR6	Vertical	Yes		48A	50H x 10D x 16W (1225H x 245D x 392W)	120 lb (264 kg)
NXBK0150CS313F1110	15 HP	FR6	Vertical	Yes		48A	36H x 12D x 30W (882H x 294D x 735W)	124 lb (272.8 kg)
NXBK0200CS103F1110	20 HP	FR6	Vertical	No		61A	14 x 53 x 12 (350 x 1325 x 300)	99 lb (44.9 kg)
NXBK0200CS113F1110	20 HP	FR6	Vertical	Yes		61A	53H x 12D x 14W (1298H x 294D x 343W)	99 lb (217.8 kg)
NXBK0200CS203F1110	20 HP	FR6	Vertical	No		61A	14 x 53 x 12 (350 x 1325 x 300)	99 lb (44.9 kg)
NXBK0200CS213F1110	20 HP	FR6	Vertical	Yes		61A	54H x 10D x 20W (1323H x 245D x 490W)	136 lb (299.2 kg)
NXBK0200CS303F1110	20 HP	FR6	Vertical	No		61A	36H x 12D x 30W (882H x 294D x 735W)	124 lb (272.8 kg)
NXBK0200CS313F1110	20 HP	FR6	Vertical	Yes		61A	36H x 12D x 30W (882H x 294D x 735W)	124 lb (272.8 kg)
NXBK0250CS103F1110	25 HP	FR7	Vertical	No		75A	16 x 62 x 12 (400 x 1550 x 300)	154 lb (69.8 kg)
NXBK0250CS113F1110	25 HP	FR7	Vertical	Yes		75A	62H x 13D x 16W (1574H x 339D x 406W)	154 lb (338.8 kg)
NXBK0250CS213F1110	25 HP	FR7	Vertical	Yes		75A	58H x 10D x 20W (1421H x 245D x 490W)	150 lb (330 kg)
NXBK0250CS303F1110	25 HP	FR7	Vertical	No		75A	48H x 12D x 36W (1176H x 294D x 882W)	193 lb (424.6 kg)
NXBK0250CS313F1110	25 HP	FR7	Vertical	Yes		75A	48H x 12D x 36W (1176H x 294D x 882W)	193 lb (424.6 kg)
NXBK0300CS103F1110	30 HP	FR7	Vertical	No		88A	16 x 62 x 12 (400 x 1550 x 300)	154 lb (69.8 kg)
NXBK0300CS113F1110	30 HP	FR7	Vertical	Yes		88A	62H x 13D x 16W (1574H x 339D x 406W)	154 lb (338.8 kg)
NXBK0300CS213F1110	30 HP	FR7	Vertical	Yes		88A	58H x 10D x 20W (1421H x 245D x 490W)	150 lb (330 kg)
NXBK0300CS303F1110	30 HP	FR7	Vertical	No		88A	48H x 12D x 36W (1176H x 294D x 882W)	193 lb (424.6 kg)
NXBK0300CS313F1110	30 HP	FR7	Vertical	Yes		88A	48H x 12D x 36W (1176H x 294D x 882W)	193 lb (424.6 kg)
NXBK0400CS103F1110	40 HP	FR8	Side by Side	No		114A	36 x 54 x 16 (914.4 x 1371.6 x 406.4)	360 lb (163.3 kg)
NXBK0400CS113F1110	40 HP	FR7	Vertical	Yes		114A	62H x 13D x 16W (1574H x 339D x 406W)	154 lb (338.8 kg)
NXBK0400CS213F1110	40 HP	FR7	Vertical	Yes		114A	64H x 12D x 24W (1568H x 294D x 588W)	200 lb (440 kg)

Material Number	Horsepower	Frame Type	Layout	Auto Bypass	Additional Features	Current Ratings	Approximate, Dimensions in. (mm)	Weight
NXBK0400CS303F1110	40 HP	FR7	Vertical	No		114A	48H x 12D x 36W (1176H x 294D x 882W)	193 lb (424.6 kg)
NXBK0400CS313F1110	40 HP	FR7	Vertical	Yes		114A	48H x 12D x 36W (1176H x 294D x 882W)	193 lb (424.6 kg)
NXBK0500CS103F1110	50 HP	FR8	Side by Side	No		140A	36 x 54 x 16 (914.4 x 1371.6 x 406.4)	360 lb (163.3 kg)
NXBK0500CS113F1110	50 HP	FR8	Side by Side	Yes		140A	54H x 16D x 36W (1350H x 400D x 900W)	360 lb (792 kg)
NXBK0500CS213F1110	50 HP	FR8	Side by Side	Yes		140A	48H x 14D x 36W (1176H x 343D x 882W)	350 lb (770 kg)
NXBK0500CS303F1110	50 HP	FR8	Side by Side	No		140A	60H x 14D x 36W (1470H x 343D x 882W)	440 lb (968 kg)
NXBK0500CS313F1110	50 HP	FR8	Side by Side	Yes		140A	60H x 14D x 36W (1470H x 343D x 882W)	440 lb (968 kg)
NXBK0600CS103F1110	60 HP	FR8	Side by Side	No		170A	36 x 54 x 16 (914.4 x 1371.6 x 406.4)	360 lb (163.3 kg)
NXBK0600CS113F1110	60 HP	FR8	Side by Side	Yes		170A	54H x 16D x 36W (1350H x 400D x 900W)	360 lb (792 kg)
NXBK0600CS213F1110	60 HP	FR8	Side by Side	Yes		170A	48H x 14D x 36W (1176H x 343D x 882W)	350 lb (770 kg)
NXBK0600CS303F1110	60 HP	FR8	Side by Side	No		170A	60H x 14D x 36W (1470H x 343D x 882W)	440 lb (968 kg)
NXBK0600CS313F1110	60 HP	FR8	Side by Side	Yes		170A	60H x 14D x 36W (1470H x 343D x 882W)	440 lb (968 kg)
NXBK0750CS103F1110	75 HP	FR8	Side by Side	No		205A	36 x 54 x 16 (914.4 x 1371.6 x 406.4)	360 lb (163.3 kg)
NXBK0750CS113F1110	75 HP	FR8	Side by Side	Yes		205A	54H x 16D x 36W (1350H x 400D x 900W)	360 lb (792 kg)
NXBK0750CS213F1110	75 HP	FR8	Side by Side	Yes		205A	48H x 14D x 36W (1176H x 343D x 882W)	350 lb (770 kg)
NXBK0750CS303F1110	75 HP	FR8	Side by Side	No		205A	60H x 14D x 36W (1470H x 343D x 882W)	440 lb (968 kg)
NXBK0750CS313F1110	75 HP	FR8	Side by Side	Yes		205A	60H x 14D x 36W (1470H x 343D x 882W)	440 lb (968 kg)
208 Vac — Drive with Fused Disconnect								
NXBK0010DS100F0000	1 HP	FR4	Vertical	No		4.8A	40H x 9.5D x 9.5W (1016H x 241D x 231W)	43 lb (94.6 kg)
NXBK0010DS200F0000	1 HP	FR4	Vertical	No		4.8A	36H x 10D x 16W (882H x 245D x 392W)	53 lb (116.6 kg)
NXBK0010DS300F0000	1 HP	FR4	Vertical	No		4.8A	24H x 10D x 20W (588H x 245D x 490W)	54 lb (118.8 kg)
NXBK0015DS100F0000	1.5 HP	Call Customer Care	Vertical	No		6.6A	Contact Customer Care	Contact Customer Care (Call Customer Care)
NXBK0015DS200F0000	1.5 HP	Call Customer Care	Vertical	No		6.6A	Contact Customer Care	Contact Customer Care (Call Customer Care)
NXBK0015DS300F0000	1.5 HP	Call Customer Care	Vertical	No		6.6A	Contact Customer Care	Contact Customer Care (Call Customer Care)
NXBK0020DS100F0000	2 HP	Call Customer Care	Vertical	No		7.8A	Contact Customer Care	Contact Customer Care (Call Customer Care)
NXBK0020DS200F0000	2 HP	Call Customer Care	Vertical	No		7.8A	Contact Customer Care	Contact Customer Care (Call Customer Care)
NXBK0020DS300F0000	2 HP	Call Customer Care	Vertical	No		7.8A	Contact Customer Care	Contact Customer Care (Call Customer Care)
NXBK0030DS100F0000	3 HP	Call Customer Care	Vertical	No		0.46A	Contact Customer Care	Contact Customer Care (Call Customer Care)
NXBK0030DS200F0000	3 HP	Call Customer Care	Vertical	No		0.46A	Contact Customer Care	Contact Customer Care (Call Customer Care)
NXBK0030DS300F0000	3 HP	Call Customer Care	Vertical	No		0.46A	Contact Customer Care	Contact Customer Care (Call Customer Care)
NXBK0040DS100F0000	4 HP	Call Customer Care	Vertical	No		12.5A	Contact Customer Care	Contact Customer Care (Call Customer Care)
NXBK0040DS200F0000	4 HP	Call Customer Care	Vertical	No		12.5A	Contact Customer Care	Contact Customer Care (Call Customer Care)
NXBK0040DS300F0000	4 HP	Call Customer Care	Vertical	No		12.5A	Contact Customer Care	Contact Customer Care (Call Customer Care)
NXBK0050DS100F0000	5 HP	Call Customer Care	Vertical	No		17.5A	Contact Customer Care	Contact Customer Care (Call Customer Care)
NXBK0050DS200F0000	5 HP	Call Customer Care	Vertical	No		17.5A	Contact Customer Care	Contact Customer Care (Call Customer Care)
NXBK0050DS300F0000	5 HP	Call Customer Care	Vertical	No		17.5A	Contact Customer Care	Contact Customer Care (Call Customer Care)
NXBK0075DS100F0000	7.5 HP	FR5	Vertical	No		25A	11 x 46 x 10.5 (275 x 1150 x 262.5)	62 lb (28.1 kg)
NXBK0075DS200F0000	7.5 HP	Call Customer Care	Vertical	No		25A	Contact Customer Care	Contact Customer Care (Call Customer Care)
NXBK0075DS300F0000	7.5 HP	Call Customer Care	Vertical	No		25A	Contact Customer Care	Contact Customer Care (Call Customer Care)
NXBK0100DS100F0000	10 HP	Call Customer Care	Vertical	No		31A	Contact Customer Care	Contact Customer Care (Call Customer Care)
NXBK0100DS200F0000	10 HP	Call Customer Care	Vertical	No		31A	Contact Customer Care	Contact Customer Care (Call Customer Care)
NXBK0100DS300F0000	10 HP	Call Customer Care	Vertical	No		31A	Contact Customer Care	Contact Customer Care (Call Customer Care)
NXBK0150DS100F0000	15 HP	Call Customer Care	Vertical	No		48A	Contact Customer Care	Contact Customer Care (Call Customer Care)
NXBK0150DS200F0000	15 HP	Call Customer Care	Vertical	No		48A	Contact Customer Care	Contact Customer Care (Call Customer Care)
NXBK0150DS300F0000	15 HP	Call Customer Care	Vertical	No		48A	Contact Customer Care	Contact Customer Care (Call Customer Care)

Material Number	Horsepower	Frame Type	Layout	Auto Bypass	Additional Features	Current Ratings	Approximate, Dimensions in. (mm)	Weight
NXBK0200DS100F0000	20 HP	Call Customer Care	Vertical	No		61A	Contact Customer Care	Contact Customer Care (Call Customer Care)
NXBK0200DS200F0000	20 HP	Call Customer Care	Vertical	No		61A	Contact Customer Care	Contact Customer Care (Call Customer Care)
NXBK0200DS300F0000	20 HP	Call Customer Care	Vertical	No		61A	Contact Customer Care	Contact Customer Care (Call Customer Care)
NXBK0250DS100F0000	25 HP	Call Customer Care	Vertical	No		75A	Contact Customer Care	Contact Customer Care (Call Customer Care)
NXBK0250DS200F0000	25 HP	Call Customer Care	Vertical	No		75A	Contact Customer Care	Contact Customer Care (Call Customer Care)
NXBK0250DS300F0000	25 HP	Call Customer Care	Vertical	No		75A	Contact Customer Care	Contact Customer Care (Call Customer Care)
NXBK0300DS100F0000	30 HP	Call Customer Care	Vertical	No		88A	Contact Customer Care	Contact Customer Care (Call Customer Care)
NXBK0300DS200F0000	30 HP	Call Customer Care	Vertical	No		88A	Contact Customer Care	Contact Customer Care (Call Customer Care)
NXBK0300DS300F0000	30 HP	Call Customer Care	Vertical	No		88A	Contact Customer Care	Contact Customer Care (Call Customer Care)
NXBK0400DS100F0000	40 HP	Call Customer Care	Side by Side	No		114A	Contact Customer Care	Contact Customer Care (Call Customer Care)
NXBK0400DS200F0000	40 HP	Call Customer Care	Side by Side	No		114A	Contact Customer Care	Contact Customer Care (Call Customer Care)
NXBK0400DS300F0000	40 HP	Call Customer Care	Side by Side	No		114A	Contact Customer Care	Contact Customer Care (Call Customer Care)
NXBK0500DS100F0000	50 HP	Call Customer Care	Side by Side	No		140A	Contact Customer Care	Contact Customer Care (Call Customer Care)
NXBK0500DS200F0000	50 HP	Call Customer Care	Side by Side	No		140A	Contact Customer Care	Contact Customer Care (Call Customer Care)
NXBK0500DS300F0000	50 HP	Call Customer Care	Side by Side	No		140A	Contact Customer Care	Contact Customer Care (Call Customer Care)
NXBK0600DS100F0000	60 HP	Call Customer Care	Side by Side	No		170A	Contact Customer Care	Contact Customer Care (Call Customer Care)
NXBK0600DS200F0000	60 HP	Call Customer Care	Side by Side	No		170A	Contact Customer Care	Contact Customer Care (Call Customer Care)
NXBK0600DS300F0000	60 HP	Call Customer Care	Side by Side	No		170A	Contact Customer Care	Contact Customer Care (Call Customer Care)
NXBK0750DS100F0000	75 HP	Call Customer Care	Side by Side	No		205A	Contact Customer Care	Contact Customer Care (Call Customer Care)
NXBK0750DS200F0000	75 HP	Call Customer Care	Side by Side	No		205A	Contact Customer Care	Contact Customer Care (Call Customer Care)
NXBK0750DS300F0000	75 HP	Call Customer Care	Side by Side	No		205A	Contact Customer Care	Contact Customer Care (Call Customer Care)
230 Vac — Drive alone								
NXBS0010CS30000000	1 HP	FR4	Vertical	No		4.8A	24H x 10D x 20W (588H x 245D x 490W)	54 lb (118.8 kg)
NXBS0015CS30000000	1.5 HP	FR4	Vertical	No		6.6A	24H x 10D x 20W (588H x 245D x 490W)	54 lb (118.8 kg)
NXBS0020CS30000000	2 HP	FR4	Vertical	No		7.8A	24H x 10D x 20W (588H x 245D x 490W)	54 lb (118.8 kg)
NXBS0030CS30000000	3 HP	FR4	Vertical	No		11A	24H x 10D x 20W (588H x 245D x 490W)	54 lb (118.8 kg)
NXBS0040CS30000000	4 HP	FR4	Vertical	No		12.5A	24H x 10D x 20W (588H x 245D x 490W)	54 lb (118.8 kg)
NXBS0050CS30000000	5 HP	FR5	Vertical	No		17.5A	30H x 10D x 24W (735H x 245D x 588W)	78 lb (171.6 kg)
NXBS0075CS30000000	7.5 HP	FR5	Vertical	No		25A	30H x 10D x 24W (735H x 245D x 588W)	78 lb (171.6 kg)
NXBS0100CS30000000	10 HP	FR5	Vertical	No		31A	30H x 10D x 24W (735H x 245D x 588W)	78 lb (171.6 kg)
NXBS0150CS30000000	15 HP	FR6	Vertical	No		48A	36H x 12D x 30W (882H x 294D x 735W)	124 lb (272.8 kg)
NXBS0200CS30000000	20 HP	FR6	Vertical	No		61A	36H x 12D x 30W (882H x 294D x 735W)	124 lb (272.8 kg)
NXBS0250CS30000000	25 HP	FR7	Vertical	No		75A	48H x 12D x 36W (1176H x 294D x 882W)	193 lb (424.6 kg)
NXBS0300CS30000000	30 HP	FR7	Vertical	No		88A	48H x 12D x 36W (1176H x 294D x 882W)	193 lb (424.6 kg)
NXBS0400CS30000000	40 HP	FR7	Vertical	No		114A	48H x 12D x 36W (1176H x 294D x 882W)	193 lb (424.6 kg)
230 Vac — Drive with 2 contactor bypass								
NXBS0010CS10200000	1 HP	FR4	Vertical	No		4.8A	40H x 9.5D x 9.5W (1016H x 241D x 231W)	43 lb (94.6 kg)
NXBS0010CS20200000	1 HP	FR4	Vertical	No		4.8A	36H x 10D x 16W (882H x 245D x 392W)	53 lb (116.6 kg)
NXBS0010CS30200000	1 HP	FR4	Vertical	No		4.8A	24H x 10D x 20W (588H x 245D x 490W)	54 lb (118.8 kg)
NXBS0015CS10200000	1.5 HP	FR4	Vertical	No		6.6A	9.5 x 40 x 9.5 (237.5 x 1000 x 237.5)	43 lb (19.5 kg)
NXBS0015CS20200000	1.5 HP	FR4	Vertical	No		6.6A	9.5 x 40 x 9.5 (237.5 x 1000 x 237.5)	43 lb (19.5 kg)
NXBS0015CS30200000	1.5 HP	FR4	Vertical	No		6.6A	20 x 24 x 10 (500 x 600 x 250)	54 lb (24.5 kg)
NXBS0020CS10200000	2 HP	FR4	Vertical	No		7.8A	9.5 x 40 x 9.5 (237.5 x 1000 x 237.5)	43 lb (19.5 kg)
NXBS0020CS20200000	2 HP	FR4	Vertical	No		7.8A	9.5 x 40 x 9.5 (237.5 x 1000 x 237.5)	43 lb (19.5 kg)
NXBS0020CS30200000	2 HP	FR4	Vertical	No		7.8A	20 x 24 x 10 (500 x 600 x 250)	54 lb (24.5 kg)
NXBS0030CS10200000	3 HP	FR4	Vertical	No		11A	9.5 x 40 x 9.5 (237.5 x 1000 x 237.5)	43 lb (19.5 kg)

Material Number	Horsepower	Frame Type	Layout	Auto Bypass	Additional Features	Current Ratings	Approximate, Dimensions in. (mm)	Weight
NXBS0030CS20200000	3 HP	FR4	Vertical	No		11A	9.5 x 40 x 9.5 (237.5 x 1000 x 237.5)	43 lb (19.5 kg)
NXBS0030CS30200000	3 HP	FR4	Vertical	No		11A	20 x 24 x 10 (500 x 600 x 250)	54 lb (24.5 kg)
NXBS0040CS10200000	4 HP	FR4	Vertical	No		12.5A	9.5 x 40 x 9.5 (237.5 x 1000 x 237.5)	43 lb (19.5 kg)
NXBS0040CS20200000	4 HP	FR4	Vertical	No		12.5A	9.5 x 40 x 9.5 (237.5 x 1000 x 237.5)	43 lb (19.5 kg)
NXBS0050CS10200000	5 HP	FR5	Vertical	No		17.5A	11 x 46 x 10.5 (275 x 1150 x 262.5)	62 lb (28.1 kg)
NXBS0050CS20200000	5 HP	FR5	Vertical	No		17.5A	11 x 46 x 10.5 (275 x 1150 x 262.5)	62 lb (28.1 kg)
NXBS0075CS10200000	7.5 HP	FR5	Vertical	No		25A	11 x 46 x 10.5 (275 x 1150 x 262.5)	62 lb (28.1 kg)
NXBS0075CS20200000	7.5 HP	FR5	Vertical	No		25A	11 x 46 x 10.5 (275 x 1150 x 262.5)	62 lb (28.1 kg)
NXBS0100CS10200000	10 HP	FR5	Vertical	No		31A	11 x 46 x 10.5 (275 x 1150 x 262.5)	62 lb (28.1 kg)
NXBS0100CS20200000	10 HP	FR5	Vertical	No		31A	11 x 46 x 10.5 (275 x 1150 x 262.5)	62 lb (28.1 kg)
NXBS0100CS30200000	10 HP	FR5	Vertical	No		31A	30H x 10D x 24W (735H x 245D x 588W)	78 lb (171.6 kg)
NXBS0150CS10200000	15 HP	FR6	Vertical	No		48A	14 x 53 x 12 (350 x 1325 x 300)	99 lb (44.9 kg)
NXBS0150CS20200000	15 HP	FR6	Vertical	No		48A	14 x 53 x 12 (350 x 1325 x 300)	99 lb (44.9 kg)
NXBS0200CS10200000	20 HP	FR6	Vertical	No		61A	14 x 53 x 12 (350 x 1325 x 300)	99 lb (44.9 kg)
NXBS0200CS20200000	20 HP	FR6	Vertical	No		61A	14 x 53 x 12 (350 x 1325 x 300)	99 lb (44.9 kg)
NXBS0250CS10200000	25 HP	FR7	Vertical	No		75A	16 x 62 x 13 (400 x 1550 x 325)	154 lb (69.8 kg)
NXBS0250CS20200000	25 HP	FR7	Vertical	No		75A	16 x 62 x 13 (400 x 1550 x 325)	154 lb (69.8 kg)
NXBS0300CS10200000	30 HP	FR7	Vertical	No		88A	16 x 62 x 13 (400 x 1550 x 325)	154 lb (69.8 kg)
NXBS0300CS20200000	30 HP	FR7	Vertical	No		88A	16 x 62 x 13 (400 x 1550 x 325)	154 lb (69.8 kg)
NXBS0300CS30200000	30 HP	FR7	Vertical	No		88A	48H x 12D x 36W (1176H x 294D x 882W)	193 lb (424.6 kg)
NXBS0400CS10200000	40 HP	FR8	Side by Side	No		114A	36 x 54 x 16 (914.4 x 1371.6 x 406.4)	360 lb (163.3 kg)
NXBS0400CS20200000	40 HP	FR8	Side by Side	No		114A	36 x 54 x 16 (914.4 x 1371.6 x 406.4)	360 lb (163.3 kg)
NXBS0500CS10200000	50 HP	FR8	Side by Side	No		140A	36 x 54 x 16 (914.4 x 1371.6 x 406.4)	360 lb (163.3 kg)
NXBS0500CS20200000	50 HP	FR8	Side by Side	No		140A	36 x 54 x 16 (914.4 x 1371.6 x 406.4)	360 lb (163.3 kg)
NXBS0600CS10200000	60 HP	FR8	Side by Side	No		170A	36 x 54 x 16 (914.4 x 1371.6 x 406.4)	360 lb (163.3 kg)
NXBS0600CS20200000	60 HP	FR8	Side by Side	No		170A	36 x 54 x 16 (914.4 x 1371.6 x 406.4)	360 lb (163.3 kg)
NXBS0750CS10200000	75 HP	FR8	Side by Side	No		205A	36 x 54 x 16 (914.4 x 1371.6 x 406.4)	360 lb (163.3 kg)
NXBS0750CS20200000	75 HP	FR8	Side by Side	No		205A	36 x 54 x 16 (914.4 x 1371.6 x 406.4)	360 lb (163.3 kg)
NXBS0750CS30200000	75 HP	FR8	Side by Side	No		205A	60 x 12 x 34 (152 x 30.5 x 86)	440 lb (199.5 kg)
230 Vac — Drive with 3 contactor bypass								
NXBS0010CS103F1110	1 HP	FR4	Vertical	No		4.8A	40H x 9.5D x 9.5W (1016H x 241D x 231W)	43 lb (94.6 kg)
NXBS0010CS113F1110	1 HP	FR4	Vertical	Yes		4.8A	40H x 9.5D x 9.5W (1016H x 241D x 231W)	43 lb (94.6 kg)
NXBS0010CS203F1110	1 HP	FR4	Vertical	No		4.8A	36H x 10D x 16W (882H x 245D x 392W)	53 lb (116.6 kg)
NXBS0010CS213F1110	1 HP	FR4	Vertical	Yes		4.8A	36H x 10D x 16W (882H x 245D x 392W)	53 lb (116.6 kg)
NXBS0010CS303F1110	1 HP	FR4	Vertical	No		4.8A	24H x 10D x 20W (588H x 245D x 490W)	54 lb (118.8 kg)
NXBS0010CS313F1110	1 HP	FR4	Vertical	Yes		4.8A	24H x 10D x 20W (588H x 245D x 490W)	54 lb (118.8 kg)
NXBS0015CS103F1110	1.5 HP	FR4	Vertical	No		6.6A	9.5 x 40 x 9.5 (237.5 x 1000 x 237.5)	43 lb (19.5 kg)
NXBS0015CS113F1110	1.5 HP	FR4	Vertical	Yes		6.6A	40H x 9.5D x 9.5W (1016H x 241D x 231W)	43 lb (94.6 kg)
NXBS0015CS203F1110	1.5 HP	FR4	Vertical	No		6.6A	9.5 x 40 x 9.5 (237.5 x 1000 x 237.5)	43 lb (19.5 kg)
NXBS0015CS213F1110	1.5 HP	FR4	Vertical	Yes		6.6A	36H x 10D x 16W (882H x 245D x 392W)	53 lb (116.6 kg)
NXBS0015CS303F1110	1.5 HP	FR4	Vertical	No		6.6A	24H x 10D x 20W (588H x 245D x 490W)	54 lb (118.8 kg)
NXBS0015CS313F1110	1.5 HP	FR4	Vertical	Yes		6.6A	24H x 10D x 20W (588H x 245D x 490W)	54 lb (118.8 kg)
NXBS0020CS103F1110	2 HP	FR4	Vertical	No		7.8A	9.5 x 40 x 9.5 (237.5 x 1000 x 237.5)	43 lb (19.5 kg)
NXBS0020CS113F1110	2 HP	FR4	Vertical	Yes		7.8A	40H x 9.5D x 9.5W (1016H x 241D x 231W)	43 lb (94.6 kg)
NXBS0020CS203F1110	2 HP	FR4	Vertical	No		7.8A	9.5 x 40 x 9.5 (237.5 x 1000 x 237.5)	43 lb (19.5 kg)
NXBS0020CS213F1110	2 HP	FR4	Vertical	Yes		7.8A	36H x 10D x 16W (882H x 245D x 392W)	53 lb (116.6 kg)
NXBS0020CS303F1110	2 HP	FR4	Vertical	No		7.8A	24H x 10D x 20W (588H x 245D x 490W)	54 lb (118.8 kg)
NXBS0020CS313F1110	2 HP	FR4	Vertical	Yes		7.8A	24H x 10D x 20W (588H x 245D x 490W)	54 lb (118.8 kg)
NXBS0030CS103F1110	3 HP	FR4	Vertical	No		11A	9.5 x 40 x 9.5 (237.5 x 1000 x 237.5)	43 lb (19.5 kg)
NXBS0030CS113F1110	3 HP	FR4	Vertical	Yes		11A	40H x 9.5D x 9.5W (1016H x 241D x 231W)	43 lb (94.6 kg)
NXBS0030CS203F1110	3 HP	FR4	Vertical	No		11A	9.5 x 40 x 9.5 (237.5 x 1000 x 237.5)	43 lb (19.5 kg)
NXBS0030CS213F1110	3 HP	FR4	Vertical	Yes		11A	36H x 10D x 16W (882H x 245D x 392W)	53 lb (116.6 kg)
NXBS0030CS303F1110	3 HP	FR4	Vertical	No		11A	24H x 10D x 20W (588H x 245D x 490W)	54 lb (118.8 kg)
NXBS0030CS313F1110	3 HP	FR4	Vertical	Yes		11A	24H x 10D x 20W (588H x 245D x 490W)	54 lb (118.8 kg)
NXBS0040CS103F1110	4 HP	FR4	Vertical	No		12.5A	9.5 x 40 x 9.5 (237.5 x 1000 x 237.5)	43 lb (19.5 kg)
NXBS0040CS113F1110	4 HP	FR4	Vertical	Yes		12.5A	40H x 9.5D x 9.5W (1016H x 241D x 231W)	43 lb (94.6 kg)
NXBS0040CS203F1110	4 HP	FR4	Vertical	No		12.5A	9.5 x 40 x 9.5 (237.5 x 1000 x 237.5)	43 lb (19.5 kg)
NXBS0040CS213F1110	4 HP	FR4	Vertical	Yes		12.5A	36H x 10D x 16W (882H x 245D x 392W)	53 lb (116.6 kg)
NXBS0040CS303F1110	4 HP	FR4	Vertical	No		12.5A	24H x 10D x 20W (588H x 245D x 490W)	54 lb (118.8 kg)
NXBS0040CS313F1110	4 HP	FR4	Vertical	Yes		12.5A	24H x 10D x 20W (588H x 245D x 490W)	54 lb (118.8 kg)
NXBS0050CS103F1110	5 HP	FR5	Vertical	No		17.5A	11 x 46 x 10.5 (275 x 1150 x 262.5)	62 lb (28.1 kg)
NXBS0050CS113F1110	5 HP	FR5	Vertical	Yes		17.5A	46H x 10.5D x 11W (1168H x 257D x 279W)	62 lb (136.4 kg)
NXBS0050CS203F1110	5 HP	FR5	Vertical	No		17.5A	11 x 46 x 10.5 (275 x 1150 x 262.5)	62 lb (28.1 kg)

Material Number	Horsepower	Frame Type	Layout	Auto Bypass	Additional Features	Current Ratings	Approximate, Dimensions in. (mm)	Weight
NXBS0050CS213F1110	5 HP	FR5	Vertical	Yes		17.5A	36H x 10D x 16W (882H x 245D x 392W)	64 lb (140.8 kg)
NXBS0050CS303F1110	5 HP	FR5	Vertical	No		17.5A	30H x 10D x 24W (735H x 245D x 588W)	78 lb (171.6 kg)
NXBS0050CS313F1110	5 HP	FR5	Vertical	Yes		17.5A	30H x 10D x 24W (735H x 245D x 588W)	78 lb (171.6 kg)
NXBS0075CS103F1110	7.5 HP	FR5	Vertical	No		25A	11 x 46 x 10.5 (275 x 1150 x 262.5)	62 lb (28.1 kg)
NXBS0075CS113F1110	7.5 HP	FR5	Vertical	Yes		25A	46H x 10.5D x 11W (1168H x 257D x 279W)	62 lb (136.4 kg)
NXBS0075CS203F1110	7.5 HP	FR5	Vertical	No		25A	11 x 46 x 10.5 (275 x 1150 x 262.5)	62 lb (28.1 kg)
NXBS0075CS213F1110	7.5 HP	FR5	Vertical	Yes		25A	36H x 10D x 16W (882H x 245D x 392W)	64 lb (140.8 kg)
NXBS0075CS303F1110	7.5 HP	FR5	Vertical	No		25A	30H x 10D x 24W (735H x 245D x 588W)	78 lb (171.6 kg)
NXBS0075CS313F1110	7.5 HP	FR5	Vertical	Yes		25A	30H x 10D x 24W (735H x 245D x 588W)	78 lb (171.6 kg)
NXBS0100CS103F1110	10 HP	FR5	Vertical	No		31A	11 x 46 x 10.5 (275 x 1150 x 262.5)	62 lb (28.1 kg)
NXBS0100CS113F1110	10 HP	FR5	Vertical	Yes		31A	46H x 10.5D x 11W (1168H x 257D x 279W)	62 lb (136.4 kg)
NXBS0100CS203F1110	10 HP	FR5	Vertical	No		31A	11 x 46 x 10.5 (275 x 1150 x 262.5)	62 lb (28.1 kg)
NXBS0100CS213F1110	10 HP	FR5	Vertical	Yes		31A	44H x 10D x 16W (1078H x 245D x 392W)	70 lb (154 kg)
NXBS0100CS303F1110	10 HP	FR5	Vertical	No		31A	30H x 10D x 24W (735H x 245D x 588W)	78 lb (171.6 kg)
NXBS0100CS313F1110	10 HP	FR5	Vertical	Yes		31A	30H x 10D x 24W (735H x 245D x 588W)	78 lb (171.6 kg)
NXBS0150CS103F1110	15 HP	FR6	Vertical	No		48A	14 x 53 x 12 (350 x 1325 x 300)	99 lb (44.9 kg)
NXBS0150CS113F1110	15 HP	FR6	Vertical	Yes		48A	53H x 12D x 14W (1298H x 294D x 343W)	99 lb (217.8 kg)
NXBS0150CS203F1110	15 HP	FR6	Vertical	No		48A	14 x 53 x 12 (350 x 1325 x 300)	99 lb (44.9 kg)
NXBS0150CS213F1110	15 HP	FR6	Vertical	Yes		48A	50H x 10D x 16W (1225H x 245D x 392W)	120 lb (264 kg)
NXBS0150CS303F1110	15 HP	FR6	Vertical	No		48A	36H x 12D x 30W (882H x 294D x 735W)	124 lb (272.8 kg)
NXBS0150CS313F1110	15 HP	FR6	Vertical	Yes		48A	36H x 12D x 30W (882H x 294D x 735W)	124 lb (272.8 kg)
NXBS0200CS103F1110	20 HP	FR6	Vertical	No		61A	14 x 53 x 12 (350 x 1325 x 300)	99 lb (44.9 kg)
NXBS0200CS113F1110	20 HP	FR6	Vertical	Yes		61A	53H x 12D x 14W (1298H x 294D x 343W)	99 lb (217.8 kg)
NXBS0200CS203F1110	20 HP	FR6	Vertical	No		61A	14 x 53 x 12 (350 x 1325 x 300)	99 lb (44.9 kg)
NXBS0200CS213F1110	20 HP	FR6	Vertical	Yes		61A	54H x 10D x 20W (1323H x 245D x 490W)	136 lb (299.2 kg)
NXBS0200CS303F1110	20 HP	FR6	Vertical	No		61A	36H x 12D x 30W (882H x 294D x 735W)	124 lb (272.8 kg)
NXBS0200CS313F1110	20 HP	FR6	Vertical	Yes		61A	36H x 12D x 30W (882H x 294D x 735W)	124 lb (272.8 kg)
NXBS0250CS103F1110	25 HP	FR7	Vertical	No		75A	16 x 62 x 12 (400 x 1550 x 300)	154 lb (69.8 kg)
NXBS0250CS113F1110	25 HP	FR7	Vertical	Yes		75A	62H x 13D x 16W (1574H x 339D x 406W)	154 lb (338.8 kg)
NXBS0250CS213F1110	25 HP	FR7	Vertical	Yes		75A	58H x 10D x 20W (1421H x 245D x 490W)	150 lb (330 kg)
NXBS0250CS303F1110	25 HP	FR7	Vertical	No		75A	48H x 12D x 36W (1176H x 294D x 882W)	193 lb (424.6 kg)
NXBS0250CS313F1110	25 HP	FR7	Vertical	Yes		75A	48H x 12D x 36W (1176H x 294D x 882W)	193 lb (424.6 kg)
NXBS0300CS103F1110	30 HP	FR7	Vertical	No		88A	16 x 62 x 12 (400 x 1550 x 300)	154 lb (69.8 kg)
NXBS0300CS113F1110	30 HP	FR7	Vertical	Yes		88A	62H x 13D x 16W (1574H x 339D x 406W)	154 lb (338.8 kg)
NXBS0300CS213F1110	30 HP	FR7	Vertical	Yes		88A	58H x 10D x 20W (1421H x 245D x 490W)	150 lb (330 kg)
NXBS0300CS303F1110	30 HP	FR7	Vertical	No		88A	48H x 12D x 36W (1176H x 294D x 882W)	193 lb (424.6 kg)
NXBS0300CS313F1110	30 HP	FR7	Vertical	Yes		88A	48H x 12D x 36W (1176H x 294D x 882W)	193 lb (424.6 kg)
NXBS0400CS103F1110	40 HP	FR8	Side by Side	No		114A	36 x 54 x 16 (914.4 x 1371.6 x 406.4)	360 lb (163.3 kg)
NXBS0400CS113F1110	40 HP	FR7	Vertical	Yes		114A	62H x 13D x 16W (1574H x 339D x 406W)	154 lb (338.8 kg)
NXBS0400CS213F1110	40 HP	FR7	Vertical	Yes		114A	64H x 12D x 24W (1568H x 294D x 588W)	200 lb (440 kg)
NXBS0400CS303F1110	40 HP	FR7	Vertical	No		114A	48H x 12D x 36W (1176H x 294D x 882W)	193 lb (424.6 kg)
NXBS0400CS313F1110	40 HP	FR7	Vertical	Yes		114A	48H x 12D x 36W (1176H x 294D x 882W)	193 lb (424.6 kg)
NXBS0500CS103F1110	50 HP	FR8	Side by Side	No		140A	36 x 54 x 16 (914.4 x 1371.6 x 406.4)	360 lb (163.3 kg)
NXBS0500CS113F1110	50 HP	FR8	Side by Side	Yes		140A	54H x 16D x 36W (1350H x 400D x 900W)	360 lb (792 kg)
NXBS0500CS213F1110	50 HP	FR8	Side by Side	Yes		140A	48H x 14D x 36W (1176H x 343D x 882W)	350 lb (770 kg)
NXBS0500CS303F1110	50 HP	FR8	Side by Side	No		140A	60H x 14D x 36W (1470H x 343D x 882W)	440 lb (968 kg)
NXBS0500CS313F1110	50 HP	FR8	Side by Side	Yes		140A	60H x 14D x 36W (1470H x 343D x 882W)	440 lb (968 kg)
NXBS0600CS103F1110	60 HP	FR8	Side by Side	No		170A	36 x 54 x 16 (914.4 x 1371.6 x 406.4)	360 lb (163.3 kg)
NXBS0600CS113F1110	60 HP	FR8	Side by Side	Yes		170A	54H x 16D x 36W (1350H x 400D x 900W)	360 lb (792 kg)
NXBS0600CS213F1110	60 HP	FR8	Side by Side	Yes		170A	48H x 14D x 36W (1176H x 343D x 882W)	350 lb (770 kg)
NXBS0600CS303F1110	60 HP	FR8	Side by Side	No		170A	60H x 14D x 36W (1470H x 343D x 882W)	440 lb (968 kg)
NXBS0600CS313F1110	60 HP	FR8	Side by Side	Yes		170A	60H x 14D x 36W (1470H x 343D x 882W)	440 lb (968 kg)
NXBS0750CS103F1110	75 HP	FR8	Side by Side	No		205A	36 x 54 x 16 (914.4 x 1371.6 x 406.4)	360 lb (163.3 kg)
NXBS0750CS113F1110	75 HP	FR8	Side by Side	Yes		205A	54H x 16D x 36W (1350H x 400D x 900W)	360 lb (792 kg)
NXBS0750CS213F1110	75 HP	FR8	Side by Side	Yes		205A	48H x 14D x 36W (1176H x 343D x 882W)	350 lb (770 kg)
NXBS0750CS303F1110	75 HP	FR8	Side by Side	No		205A	60H x 14D x 36W (1470H x 343D x 882W)	440 lb (968 kg)
NXBS0750CS313F1110	75 HP	FR8	Side by Side	Yes		205A	60H x 14D x 36W (1470H x 343D x 882W)	440 lb (968 kg)
230 Vac — Drive with Fused Disconnect								
NXBS0010DS100F0000	1 HP	FR4	Vertical	No		4.8A	40H x 9.5D x 9.5W (1016H x 241D x 231W)	43 lb (94.6 kg)
NXBS0010DS200F0000	1 HP	FR4	Vertical	No		4.8A	36H x 10D x 16W (882H x 245D x 392W)	53 lb (116.6 kg)
NXBS0010DS300F0000	1 HP	FR4	Vertical	No		4.8A	24H x 10D x 20W (588H x 245D x 490W)	54 lb (118.8 kg)
NXBS0015DS100F0000	1.5 HP	Call Customer Care	Vertical	No		6.6A	Contact Customer Care	Contact Customer Care (Call Customer Care)

Material Number	Horsepower	Frame Type	Layout	Auto Bypass	Additional Features	Current Ratings	Approximate, Dimensions in. (mm)	Weight
NXBS0015DS200F0000	1.5 HP	Call Customer Care	Vertical	No		6.6A	Contact Customer Care	Contact Customer Care (Call Customer Care)
NXBS0015DS300F0000	1.5 HP	Call Customer Care	Vertical	No		6.6A	Contact Customer Care	Contact Customer Care (Call Customer Care)
NXBS0020DS100F0000	2 HP	Call Customer Care	Vertical	No		7.8A	Contact Customer Care	Contact Customer Care (Call Customer Care)
NXBS0020DS200F0000	2 HP	Call Customer Care	Vertical	No		7.8A	Contact Customer Care	Contact Customer Care (Call Customer Care)
NXBS0020DS300F0000	2 HP	Call Customer Care	Vertical	No		7.8A	Contact Customer Care	Contact Customer Care (Call Customer Care)
NXBS0030DS100F0000	3 HP	FR4	Vertical	No		11A	14 x 53 x 12 (350 x 1325 x 300)	99 lb (44.9 kg)
NXBS0030DS200F0000	3 HP	Call Customer Care	Vertical	No		11A	Contact Customer Care	Contact Customer Care (Call Customer Care)
NXBS0030DS300F0000	3 HP	Call Customer Care	Vertical	No		11A	Contact Customer Care	Contact Customer Care (Call Customer Care)
NXBS0040DS100F0000	4 HP	Call Customer Care	Vertical	No		12.5A	Contact Customer Care	Contact Customer Care (Call Customer Care)
NXBS0040DS200F0000	4 HP	Call Customer Care	Vertical	No		12.5A	Contact Customer Care	Contact Customer Care (Call Customer Care)
NXBS0040DS300F0000	4 HP	Call Customer Care	Vertical	No		12.5A	Contact Customer Care	Contact Customer Care (Call Customer Care)
NXBS0050DS100F0000	5 HP	Call Customer Care	Vertical	No		17.5A	Contact Customer Care	Contact Customer Care (Call Customer Care)
NXBS0050DS200F0000	5 HP	Call Customer Care	Vertical	No		17.5A	Contact Customer Care	Contact Customer Care (Call Customer Care)
NXBS0050DS300F0000	5 HP	Call Customer Care	Vertical	No		17.5A	Contact Customer Care	Contact Customer Care (Call Customer Care)
NXBS0075DS100F0000	7.5 HP	Call Customer Care	Vertical	No		25A	Contact Customer Care	Contact Customer Care (Call Customer Care)
NXBS0075DS200F0000	7.5 HP	Call Customer Care	Vertical	No		25A	Contact Customer Care	Contact Customer Care (Call Customer Care)
NXBS0075DS300F0000	7.5 HP	Call Customer Care	Vertical	No		25A	Contact Customer Care	Contact Customer Care (Call Customer Care)
NXBS0100DS100F0000	10 HP	Call Customer Care	Vertical	No		31A	Contact Customer Care	Contact Customer Care (Call Customer Care)
NXBS0100DS200F0000	10 HP	Call Customer Care	Vertical	No		31A	Contact Customer Care	Contact Customer Care (Call Customer Care)
NXBS0100DS300F0000	10 HP	Call Customer Care	Vertical	No		31A	Contact Customer Care	Contact Customer Care (Call Customer Care)
NXBS0150DS100F0000	15 HP	Call Customer Care	Vertical	No		48A	Contact Customer Care	Contact Customer Care (Call Customer Care)
NXBS0150DS200F0000	15 HP	Call Customer Care	Vertical	No		48A	Contact Customer Care	Contact Customer Care (Call Customer Care)
NXBS0150DS300F0000	15 HP	Call Customer Care	Vertical	No		48A	Contact Customer Care	Contact Customer Care (Call Customer Care)
NXBS0200DS100F0000	20 HP	FR5	Vertical	No		61A	11 x 46 x 10.5 (275 x 1150 x 262.5)	62 lb (28.1 kg)
NXBS0200DS200F0000	20 HP	Call Customer Care	Vertical	No		61A	Contact Customer Care	Contact Customer Care (Call Customer Care)
NXBS0200DS300F0000	20 HP	Call Customer Care	Vertical	No		61A	Contact Customer Care	Contact Customer Care (Call Customer Care)
NXBS0250DS100F0000	25 HP	Call Customer Care	Vertical	No		75A	Contact Customer Care	Contact Customer Care (Call Customer Care)
NXBS0250DS200F0000	25 HP	Call Customer Care	Vertical	No		75A	Contact Customer Care	Contact Customer Care (Call Customer Care)
NXBS0250DS300F0000	25 HP	Call Customer Care	Vertical	No		75A	Contact Customer Care	Contact Customer Care (Call Customer Care)
NXBS0300DS100F0000	30 HP	Call Customer Care	Vertical	No		88A	Contact Customer Care	Contact Customer Care (Call Customer Care)
NXBS0300DS200F0000	30 HP	Call Customer Care	Vertical	No		88A	Contact Customer Care	Contact Customer Care (Call Customer Care)
NXBS0300DS300F0000	30 HP	Call Customer Care	Vertical	No		88A	Contact Customer Care	Contact Customer Care (Call Customer Care)
NXBS0400DS100F0000	40 HP	Call Customer Care	Vertical	No		114A	Contact Customer Care	Contact Customer Care (Call Customer Care)
NXBS0400DS200F0000	40 HP	Call Customer Care	Vertical	No		114A	Contact Customer Care	Contact Customer Care (Call Customer Care)
NXBS0400DS300F0000	40 HP	Call Customer Care	Vertical	No		114A	Contact Customer Care	Contact Customer Care (Call Customer Care)
NXBS0500DS100F0000	50 HP	Call Customer Care	Side by Side	No		140A	Contact Customer Care	Contact Customer Care (Call Customer Care)

Material Number	Horsepower	Frame Type	Layout	Auto Bypass	Additional Features	Current Ratings	Approximate, Dimensions in. (mm)	Weight
NXBS0500DS200F0000	50 HP	Call Customer Care	Side by Side	No		140A	Contact Customer Care	Contact Customer Care (Call Customer Care)
NXBS0500DS300F0000	50 HP	Call Customer Care	Side by Side	No		140A	Contact Customer Care	Contact Customer Care (Call Customer Care)
NXBS0600DS100F0000	60 HP	Call Customer Care	Side by Side	No		170A	Contact Customer Care	Contact Customer Care (Call Customer Care)
NXBS0600DS200F0000	60 HP	Call Customer Care	Side by Side	No		170A	Contact Customer Care	Contact Customer Care (Call Customer Care)
NXBS0600DS300F0000	60 HP	Call Customer Care	Side by Side	No		170A	Contact Customer Care	Contact Customer Care (Call Customer Care)
NXBS0750DS100F0000	75 HP	Call Customer Care	Side by Side	No		205A	Contact Customer Care	Contact Customer Care (Call Customer Care)
NXBS0750DS200F0000	75 HP	Call Customer Care	Side by Side	No		205A	Contact Customer Care	Contact Customer Care (Call Customer Care)
NXBS0750DS300F0000	75 HP	Call Customer Care	Side by Side	No		205A	Contact Customer Care	Contact Customer Care (Call Customer Care)
460 Vac — Drive alone								
NXBJ0015CS30000000	1.5 HP	FR4	Vertical	No		3.3A	24H x 10D x 20W (588H x 245D x 490W)	54 lb (118.8 kg)
NXBJ0020CS30000000	2 HP	FR4	Vertical	No		4.3A	24H x 10D x 20W (588H x 245D x 490W)	54 lb (118.8 kg)
NXBJ0030CS30000000	3 HP	FR4	Vertical	No		5.6A	24H x 10D x 20W (588H x 245D x 490W)	54 lb (118.8 kg)
NXBJ0040CS30000000	4 HP	FR4	Vertical	No		7.6A	24H x 10D x 20W (588H x 245D x 490W)	54 lb (118.8 kg)
NXBJ0050CS30000000	5 HP	FR4	Vertical	No		9A	24H x 10D x 20W (588H x 245D x 490W)	54 lb (118.8 kg)
NXBJ0075CS30000000	7.5 HP	FR4	Vertical	No		12A	24H x 10D x 20W (588H x 245D x 490W)	54 lb (118.8 kg)
NXBJ0100CS30000000	10 HP	FR5	Vertical	No		16A	30H x 10D x 24W (735H x 245D x 588W)	78 lb (171.6 kg)
NXBJ0150CS30000000	15 HP	FR5	Vertical	No		23A	30H x 10D x 24W (735H x 245D x 588W)	78 lb (171.6 kg)
NXBJ0200CS30000000	20 HP	FR5	Vertical	No		31A	30H x 10D x 24W (735H x 245D x 588W)	78 lb (171.6 kg)
NXBJ0250CS30000000	25 HP	FR6	Vertical	No		38A	36H x 12D x 30W (882H x 294D x 735W)	124 lb (272.8 kg)
NXBJ0300CS30000000	30 HP	FR6	Vertical	No		46A	36H x 12D x 30W (882H x 294D x 735W)	124 lb (272.8 kg)
NXBJ0400CS30000000	40 HP	FR6	Vertical	No		61A	36H x 12D x 30W (882H x 294D x 735W)	124 lb (272.8 kg)
NXBJ0500CS30000000	50 HP	FR7	Vertical	No		72A	48H x 12D x 36W (1176H x 294D x 882W)	193 lb (424.6 kg)
NXBJ0600CS30000000	60 HP	FR7	Vertical	No		87A	48H x 12D x 36W (1176H x 294D x 882W)	193 lb (424.6 kg)
NXBJ0750CS30000000	75 HP	FR7	Vertical	No		105A	48H x 12D x 36W (1176H x 294D x 882W)	193 lb (424.6 kg)
460 Vac — Drive with 2 contactor bypass								
NXBJ0015CS20200000	1.5 HP	FR4	Vertical	No		3.3A	9.5 x 40 x 9.5 (237.5 x 1000 x 237.5)	43 lb (19.5 kg)
NXBJ0020CS10200000	2 HP	FR4	Vertical	No		4.3A	9.5 x 40 x 9.5 (237.5 x 1000 x 237.5)	43 lb (19.5 kg)
NXBJ0020CS20200000	2 HP	FR4	Vertical	No		4.3A	9.5 x 40 x 9.5 (237.5 x 1000 x 237.5)	43 lb (19.5 kg)
NXBJ0030CS10200000	3 HP	FR4	Vertical	No		5.6A	9.5 x 40 x 9.5 (237.5 x 1000 x 237.5)	43 lb (19.5 kg)
NXBJ0030CS20200000	3 HP	FR4	Vertical	No		5.6A	9.5 x 40 x 9.5 (237.5 x 1000 x 237.5)	43 lb (19.5 kg)
NXBJ0040CS10200000	4 HP	FR4	Vertical	No		7.6A	9.5 x 40 x 9.5 (237.5 x 1000 x 237.5)	43 lb (19.5 kg)
NXBJ0040CS20200000	4 HP	FR4	Vertical	No		7.6A	9.5 x 40 x 9.5 (237.5 x 1000 x 237.5)	43 lb (19.5 kg)
NXBJ0050CS10200000	5 HP	FR4	Vertical	No		0.37A	9.5 x 40 x 9.5 (237.5 x 1000 x 237.5)	43 lb (19.5 kg)
NXBJ0050CS20200000	5 HP	FR4	Vertical	No		0.37A	9.5 x 40 x 9.5 (237.5 x 1000 x 237.5)	43 lb (19.5 kg)
NXBJ0050CS30200000	5 HP	FR4	Vertical	No		0.37A	20 x 24 x 10 (500 x 600 x 250)	54 lb (24.5 kg)
NXBJ0075CS10200000	7.5 HP	FR4	Vertical	No			9.5 x 40 x 9.5 (237.5 x 1000 x 237.5)	43 lb (19.5 kg)
NXBJ0075CS20200000	7.5 HP	FR4	Vertical	No			9.5 x 40 x 9.5 (237.5 x 1000 x 237.5)	43 lb (19.5 kg)
NXBJ0100CS10200000	10 HP	FR5	Vertical	No		16A	11 x 46 x 10.5 (275 x 1150 x 262.5)	62 lb (28.1 kg)
NXBJ0100CS20200000	10 HP	FR5	Vertical	No		16A	11 x 46 x 10.5 (275 x 1150 x 262.5)	62 lb (28.1 kg)
NXBJ0150CS10200000	15 HP	FR5	Vertical	No		23A	11 x 46 x 10.5 (275 x 1150 x 262.5)	62 lb (28.1 kg)
NXBJ0150CS20200000	15 HP	FR5	Vertical	No		23A	11 x 46 x 10.5 (275 x 1150 x 262.5)	62 lb (28.1 kg)
NXBJ0150CS30200000	15 HP	FR5	Vertical	No		23A	24 x 30 x 10 (600 x 750 x 250)	78 lb (35.4 kg)
NXBJ0200CS10200000	20 HP	FR5	Vertical	No		31A	11 x 46 x 10.5 (275 x 1150 x 262.5)	62 lb (28.1 kg)
NXBJ0200CS20200000	20 HP	FR5	Vertical	No		31A	11 x 46 x 10.5 (275 x 1150 x 262.5)	62 lb (28.1 kg)
NXBJ0250CS10200000	25 HP	FR6	Vertical	No		38A	14 x 53 x 12 (350 x 1325 x 300)	99 lb (44.9 kg)
NXBJ0250CS20200000	25 HP	FR6	Vertical	No		38A	14 x 53 x 12 (350 x 1325 x 300)	99 lb (44.9 kg)
NXBJ0300CS10200000	30 HP	FR6	Vertical	No		46A	14 x 53 x 12 (350 x 1325 x 300)	99 lb (44.9 kg)
NXBJ0300CS20200000	30 HP	FR6	Vertical	No		46A	14 x 53 x 12 (350 x 1325 x 300)	99 lb (44.9 kg)
NXBJ0300CS30200000	30 HP	FR6	Vertical	No		46A	36H x 12D x 30W (882H x 294D x 735W)	124 lb (272.8 kg)
NXBJ0400CS10200000	40 HP	FR6	Vertical	No		61A	14 x 53 x 12 (350 x 1325 x 300)	99 lb (44.9 kg)
NXBJ0400CS20200000	40 HP	FR6	Vertical	No		61A	14 x 53 x 12 (350 x 1325 x 300)	99 lb (44.9 kg)
NXBJ0500CS10200000	50 HP	FR7	Vertical	No		72A	16 x 62 x 13 (400 x 1550 x 325)	154 lb (69.8 kg)
NXBJ0500CS20200000	50 HP	FR7	Vertical	No		72A	16 x 62 x 13 (400 x 1550 x 325)	154 lb (69.8 kg)
NXBJ0600CS10200000	60 HP	FR7	Vertical	No		87A	16 x 62 x 13 (400 x 1550 x 325)	154 lb (69.8 kg)
NXBJ0600CS20200000	60 HP	FR7	Vertical	No		87A	16 x 62 x 13 (400 x 1550 x 325)	154 lb (69.8 kg)
NXBJ0600CS30200000	60 HP	FR7	Vertical	No		87A	48H x 12D x 36W (1176H x 294D x 882W)	193 lb (424.6 kg)
NXBJ0750CS10200000	75 HP	FR7	Vertical	No		105A	16 x 62 x 13 (400 x 1550 x 325)	154 lb (69.8 kg)

Material Number	Horsepower	Frame Type	Layout	Auto Bypass	Additional Features	Current Ratings	Approximate, Dimensions in. (mm)	Weight
NXBJ0750CS20200000	75 HP	FR7	Vertical	No		105A	16 x 62 x 13 (400 x 1550 x 325)	154 lb (69.8 kg)
NXBJ1000CS10200000	100 HP	FR8	Side by Side	No		140A	36 x 54 x 16 (900 x 1350 x 400)	360 lb (163.3 kg)
NXBJ1000CS20200000	100 HP	FR8	Side by Side	No		140A	36 x 54 x 16 (900 x 1350 x 400)	360 lb (163.3 kg)
NXBJ1250CS10200000	125 HP	FR8	Side by Side	No		170A	36 x 54 x 16 (900 x 1350 x 400)	360 lb (163.3 kg)
NXBJ1250CS20200000	125 HP	FR8	Side by Side	No		170A	36 x 54 x 16 (900 x 1350 x 400)	360 lb (163.3 kg)
NXBJ1500CS10200000	150 HP	FR8	Side by Side	No		205A	36 x 54 x 16 (900 x 1350 x 400)	360 lb (163.3 kg)
NXBJ1500CS20200000	150 HP	FR8	Side by Side	No		205A	36 x 54 x 16 (900 x 1350 x 400)	360 lb (163.3 kg)
NXBJ1500CS30200000	150 HP	FR8	Side by Side	No		205A	60H x 14D x 36W (1470H x 343D x 882W)	440 lb (968 kg)
460 Vac — Drive with 3 contactor bypass								
NXBJ0015CS103F1110	1.5 HP	FR4	Vertical	No		3.3A	9.5 x 40 x 9.5 (237.5 x 1000 x 237.5)	43 lb (19.5 kg)
NXBJ0015CS113F1110	1.5 HP	FR4	Vertical	Yes		3.3A	40H x 9.5D x 9.5W (1016H x 241D x 231W)	43 lb (94.6 kg)
NXBJ0015CS203F1110	1.5 HP	FR4	Vertical	No		3.3A	9.5 x 40 x 9.5 (237.5 x 1000 x 237.5)	43 lb (19.5 kg)
NXBJ0015CS213F1110	1.5 HP	FR4	Vertical	Yes		3.3A	36H x 10D x 16W (882H x 245D x 392W)	53 lb (116.6 kg)
NXBJ0015CS303F1110	1.5 HP	FR4	Vertical	No		3.3A	24H x 10D x 20W (588H x 245D x 490W)	54 lb (118.8 kg)
NXBJ0015CS313F1110	1.5 HP	FR4	Vertical	Yes		3.3A	24H x 10D x 20W (588H x 245D x 490W)	54 lb (118.8 kg)
NXBJ0020CS103F1110	2 HP	FR4	Vertical	No		4.3A	9.5 x 40 x 9.5 (237.5 x 1000 x 237.5)	43 lb (19.5 kg)
NXBJ0020CS113F1110	2 HP	FR4	Vertical	Yes		4.3A	40H x 9.5D x 9.5W (1016H x 241D x 231W)	43 lb (94.6 kg)
NXBJ0020CS203F1110	2 HP	FR4	Vertical	No		4.3A	9.5 x 40 x 9.5 (237.5 x 1000 x 237.5)	43 lb (19.5 kg)
NXBJ0020CS213F1110	2 HP	FR4	Vertical	Yes		4.3A	36H x 10D x 16W (882H x 245D x 392W)	53 lb (116.6 kg)
NXBJ0020CS303F1110	2 HP	FR4	Vertical	No		4.3A	24H x 10D x 20W (588H x 245D x 490W)	54 lb (118.8 kg)
NXBJ0020CS313F1110	2 HP	FR4	Vertical	Yes		4.3A	24H x 10D x 20W (588H x 245D x 490W)	54 lb (118.8 kg)
NXBJ0030CS103F1110	3 HP	FR4	Vertical	No		5.6A	9.5 x 40 x 9.5 (237.5 x 1000 x 237.5)	43 lb (19.5 kg)
NXBJ0030CS113F1110	3 HP	FR4	Vertical	Yes		5.6A	40H x 9.5D x 9.5W (1016H x 241D x 231W)	43 lb (94.6 kg)
NXBJ0030CS203F1110	3 HP	FR4	Vertical	No		5.6A	9.5 x 40 x 9.5 (237.5 x 1000 x 237.5)	43 lb (19.5 kg)
NXBJ0030CS213F1110	3 HP	FR4	Vertical	Yes		5.6A	36H x 10D x 16W (882H x 245D x 392W)	53 lb (116.6 kg)
NXBJ0030CS303F1110	3 HP	FR4	Vertical	No		5.6A	24H x 10D x 20W (588H x 245D x 490W)	54 lb (118.8 kg)
NXBJ0030CS313F1110	3 HP	FR4	Vertical	Yes		5.6A	24H x 10D x 20W (588H x 245D x 490W)	54 lb (118.8 kg)
NXBJ0040CS103F1110	4 HP	FR4	Vertical	No		7.6A	9.5 x 40 x 9.5 (237.5 x 1000 x 237.5)	43 lb (19.5 kg)
NXBJ0040CS113F1110	4 HP	FR4	Vertical	Yes		7.6A	40H x 9.5D x 9.5W (1016H x 241D x 231W)	43 lb (94.6 kg)
NXBJ0040CS203F1110	4 HP	FR4	Vertical	No		7.6A	9.5 x 40 x 9.5 (237.5 x 1000 x 237.5)	43 lb (19.5 kg)
NXBJ0040CS213F1110	4 HP	FR4	Vertical	Yes		7.6A	36H x 10D x 16W (882H x 245D x 392W)	53 lb (116.6 kg)
NXBJ0040CS303F1110	4 HP	FR4	Vertical	No		7.6A	24H x 10D x 20W (588H x 245D x 490W)	54 lb (118.8 kg)
NXBJ0040CS313F1110	4 HP	FR4	Vertical	Yes		7.6A	24H x 10D x 20W (588H x 245D x 490W)	54 lb (118.8 kg)
NXBJ0050CS103F1110	5 HP	FR4	Vertical	No		0.37A	9.5 x 40 x 9.5 (237.5 x 1000 x 237.5)	43 lb (19.5 kg)
NXBJ0050CS113F1110	5 HP	FR4	Vertical	Yes		9A	40H x 9.5D x 9.5W (1016H x 241D x 231W)	43 lb (94.6 kg)
NXBJ0050CS203F1110	5 HP	FR4	Vertical	No		0.37A	9.5 x 40 x 9.5 (237.5 x 1000 x 237.5)	43 lb (19.5 kg)
NXBJ0050CS213F1110	5 HP	FR4	Vertical	Yes		9A	36H x 10D x 16W (882H x 245D x 392W)	53 lb (116.6 kg)
NXBJ0050CS303F1110	5 HP	FR4	Vertical	No		9A	24H x 10D x 20W (588H x 245D x 490W)	54 lb (118.8 kg)
NXBJ0050CS313F1110	5 HP	FR4	Vertical	Yes		9A	24H x 10D x 20W (588H x 245D x 490W)	54 lb (118.8 kg)
NXBJ0075CS103F1110	7.5 HP	FR4	Vertical	No			9.5 x 40 x 9.5 (237.5 x 1000 x 237.5)	43 lb (19.5 kg)
NXBJ0075CS113F1110	7.5 HP	FR4	Vertical	Yes	Auto-Bypass		9.5 x 40 x 9.5 (237.5 x 1000 x 237.5)	43 lb (19.5 kg)
NXBJ0075CS203F1110	7.5 HP	FR4	Vertical	No			9.5 x 40 x 9.5 (237.5 x 1000 x 237.5)	43 lb (19.5 kg)
NXBJ0075CS213F1110	7.5 HP	FR4	Vertical	Yes		12A	36H x 10D x 16W (882H x 245D x 392W)	53 lb (116.6 kg)
NXBJ0075CS303F1110	7.5 HP	FR4	Vertical	No		12A	24H x 10D x 20W (588H x 245D x 490W)	54 lb (118.8 kg)
NXBJ0075CS313F1110	7.5 HP	FR4	Vertical	Yes		12A	24H x 10D x 20W (588H x 245D x 490W)	54 lb (118.8 kg)
NXBJ0100CS103F1110	10 HP	FR5	Vertical	No		16A	11 x 46 x 10.5 (275 x 1150 x 262.5)	62 lb (28.1 kg)
NXBJ0100CS113F1110	10 HP	FR5	Vertical	Yes	Auto-Bypass	16A	11 x 46 x 10.5 (275 x 1150 x 262.5)	62 lb (28.1 kg)
NXBJ0100CS203F1110	10 HP	FR5	Vertical	No		16A	11 x 46 x 10.5 (275 x 1150 x 262.5)	62 lb (28.1 kg)
NXBJ0100CS213F1110	10 HP	FR5	Vertical	Yes		16A	36H x 10D x 16W (882H x 245D x 392W)	64 lb (140.8 kg)
NXBJ0100CS303F1110	10 HP	FR5	Vertical	No		16A	30H x 10D x 24W (735H x 245D x 588W)	78 lb (171.6 kg)
NXBJ0100CS313F1110	10 HP	FR5	Vertical	Yes		16A	30H x 10D x 24W (735H x 245D x 588W)	78 lb (171.6 kg)
NXBJ0150CS103F1110	15 HP	FR5	Vertical	No		23A	11 x 46 x 10.5 (275 x 1150 x 262.5)	62 lb (28.1 kg)
NXBJ0150CS113F1110	15 HP	FR5	Vertical	Yes	Auto-Bypass	23A	11 x 46 x 10.5 (275 x 1150 x 262.5)	62 lb (28.1 kg)
NXBJ0150CS203F1110	15 HP	FR5	Vertical	No		23A	11 x 46 x 10.5 (275 x 1150 x 262.5)	62 lb (28.1 kg)
NXBJ0150CS213F1110	15 HP	FR5	Vertical	Yes		23A	36H x 10D x 16W (882H x 245D x 392W)	64 lb (140.8 kg)
NXBJ0150CS313F1110	15 HP	FR5	Vertical	Yes		23A	30H x 10D x 24W (735H x 245D x 588W)	78 lb (171.6 kg)
NXBJ0200CS103F1110	20 HP	FR5	Vertical	No		31A	11 x 46 x 10.5 (275 x 1150 x 262.5)	62 lb (28.1 kg)
NXBJ0200CS113F1110	20 HP	FR5	Vertical	Yes		31A	46H x 10.5D x 11W (1168H x 257D x 279W)	62 lb (136.4 kg)
NXBJ0200CS203F1110	20 HP	FR5	Vertical	No		31A	11 x 46 x 10.5 (275 x 1150 x 262.5)	62 lb (28.1 kg)
NXBJ0200CS213F1110	20 HP	FR5	Vertical	Yes		31A	44H x 10D x 16W (1078H x 245D x 392W)	70 lb (154 kg)

Material Number	Horsepower	Frame Type	Layout	Auto Bypass	Additional Features	Current Ratings	Approximate, Dimensions in. (mm)	Weight
NXBJ0200CS303F1110	20 HP	FR5	Vertical	No		31A	30H x 10D x 24W (735H x 245D x 588W)	78 lb (171.6 kg)
NXBJ0200CS313F1110	20 HP	FR5	Vertical	Yes		31A	30H x 10D x 24W (735H x 245D x 588W)	78 lb (171.6 kg)
NXBJ0250CS103F1110	25 HP	FR6	Vertical	No		38A	14 x 53 x 12 (350 x 1325 x 300)	99 lb (44.9 kg)
NXBJ0250CS113F1110	25 HP	FR6	Vertical	Yes		38A	53H x 12D x 14W (1298H x 294D x 343W)	99 lb (217.8 kg)
NXBJ0250CS203F1110	25 HP	FR6	Vertical	No		38A	14 x 53 x 12 (350 x 1325 x 300)	99 lb (44.9 kg)
NXBJ0250CS213F1110	25 HP	FR6	Vertical	Yes		38A	50H x 10D x 16W (1225H x 245D x 392W)	120 lb (264 kg)
NXBJ0250CS303F1110	25 HP	FR6	Vertical	No		38A	36H x 12D x 30W (882H x 294D x 735W)	124 lb (272.8 kg)
NXBJ0250CS313F1110	25 HP	FR6	Vertical	Yes		38A	36H x 12D x 30W (882H x 294D x 735W)	124 lb (272.8 kg)
NXBJ0300CS103F1110	30 HP	FR6	Vertical	No		46A	14 x 53 x 12 (350 x 1325 x 300)	99 lb (44.9 kg)
NXBJ0300CS113F1110	30 HP	FR6	Vertical	Yes		46A	53H x 12D x 14W (1298H x 294D x 343W)	99 lb (217.8 kg)
NXBJ0300CS203F1110	30 HP	FR6	Vertical	No		46A	14 x 53 x 12 (350 x 1325 x 300)	99 lb (44.9 kg)
NXBJ0300CS213F1110	30 HP	FR6	Vertical	Yes		46A	50H x 10D x 16W (1225H x 245D x 392W)	120 lb (264 kg)
NXBJ0300CS303F1110	30 HP	FR6	Vertical	No		46A	36H x 12D x 30W (882H x 294D x 735W)	124 lb (272.8 kg)
NXBJ0300CS313F1110	30 HP	FR6	Vertical	Yes		46A	36H x 12D x 30W (882H x 294D x 735W)	124 lb (272.8 kg)
NXBJ0400CS103F1110	40 HP	FR6	Vertical	No		61A	14 x 53 x 12 (350 x 1325 x 300)	99 lb (44.9 kg)
NXBJ0400CS113F1110	40 HP	FR6	Vertical	Yes		61A	53H x 12D x 14W (1298H x 294D x 343W)	99 lb (217.8 kg)
NXBJ0400CS203F1110	40 HP	FR6	Vertical	No		61A	14 x 53 x 12 (350 x 1325 x 300)	99 lb (44.9 kg)
NXBJ0400CS213F1110	40 HP	FR6	Vertical	Yes		61A	54H x 10D x 20W (1323H x 245D x 490W)	136 lb (299.2 kg)
NXBJ0400CS303F1110	40 HP	FR6	Vertical	No		61A	36H x 12D x 30W (882H x 294D x 735W)	124 lb (272.8 kg)
NXBJ0400CS313F1110	40 HP	FR6	Vertical	Yes		61A	36H x 12D x 30W (882H x 294D x 735W)	124 lb (272.8 kg)
NXBJ0500CS103F1110	50 HP	FR7	Vertical	No		72A	16 x 62 x 13 (400 x 1550 x 325)	154 lb (69.8 kg)
NXBJ0500CS113F1110	50 HP	FR7	Vertical	Yes		72A	62H x 13D x 16W (1574H x 339D x 406W)	154 lb (338.8 kg)
NXBJ0500CS203F1110	50 HP	FR7	Vertical	No		72A	16 x 62 x 13 (400 x 1550 x 325)	154 lb (69.8 kg)
NXBJ0500CS213F1110	50 HP	FR7	Vertical	Yes		72A	58H x 10D x 20W (1421H x 245D x 490W)	150 lb (330 kg)
NXBJ0500CS303F1110	50 HP	FR7	Vertical	No		72A	48H x 12D x 36W (1176H x 294D x 882W)	193 lb (424.6 kg)
NXBJ0500CS313F1110	50 HP	FR7	Vertical	Yes		72A	48H x 12D x 36W (1176H x 294D x 882W)	193 lb (424.6 kg)
NXBJ0600CS103F1110	60 HP	FR7	Vertical	No		87A	16 x 62 x 13 (400 x 1550 x 325)	154 lb (69.8 kg)
NXBJ0600CS113F1110	60 HP	FR7	Vertical	Yes		87A	62H x 13D x 16W (1574H x 339D x 406W)	154 lb (338.8 kg)
NXBJ0600CS203F1110	60 HP	FR7	Vertical	No		87A	16 x 62 x 13 (400 x 1550 x 325)	154 lb (69.8 kg)
NXBJ0600CS213F1110	60 HP	FR7	Vertical	Yes		87A	58H x 10D x 20W (1421H x 245D x 490W)	150 lb (330 kg)
NXBJ0600CS303F1110	60 HP	FR7	Vertical	No		87A	48H x 12D x 36W (1176H x 294D x 882W)	193 lb (424.6 kg)
NXBJ0600CS313F1110	60 HP	FR7	Vertical	Yes		87A	48H x 12D x 36W (1176H x 294D x 882W)	193 lb (424.6 kg)
NXBJ0750CS103F1110	75 HP	FR7	Vertical	No		105A	16 x 62 x 13 (400 x 1550 x 325)	154 lb (69.8 kg)
NXBJ0750CS113F1110	75 HP	FR7	Vertical	Yes		105A	62H x 13D x 16W (1574H x 339D x 406W)	154 lb (338.8 kg)
NXBJ0750CS203F1110	75 HP	FR7	Vertical	No		105A	16 x 62 x 13 (400 x 1550 x 325)	154 lb (69.8 kg)
NXBJ0750CS213F1110	75 HP	FR7	Vertical	Yes		105A	58H x 10D x 20W (1421H x 245D x 490W)	150 lb (330 kg)
NXBJ0750CS303F1110	75 HP	FR7	Vertical	No		105A	48H x 12D x 36W (1176H x 294D x 882W)	193 lb (424.6 kg)
NXBJ0750CS313F1110	75 HP	FR7	Vertical	Yes		105A	48H x 12D x 36W (1176H x 294D x 882W)	193 lb (424.6 kg)
NXBJ1000CS103F1110	100 HP	FR8	Side by Side	No		140A	36 x 54 x 16 (900 x 1350 x 400)	360 lb (163.3 kg)
NXBJ1000CS113F1110	100 HP	FR8	Side by Side	Yes		140A	54H x 16D x 36W (1350H x 400D x 900W)	360 lb (792 kg)
NXBJ1000CS203F1110	100 HP	FR8	Side by Side	No		140A	36 x 54 x 16 (900 x 1350 x 400)	360 lb (163.3 kg)
NXBJ1000CS213F1110	100 HP	FR8	Side by Side	Yes		140A	48H x 14D x 36W (1176H x 343D x 882W)	350 lb (770 kg)
NXBJ1000CS303F1110	100 HP	FR8	Side by Side	No		140A	60H x 14D x 36W (1470H x 343D x 882W)	440 lb (968 kg)
NXBJ1000CS313F1110	100 HP	FR8	Side by Side	Yes		140A	60H x 14D x 36W (1470H x 343D x 882W)	440 lb (968 kg)
NXBJ1250CS103F1110	125 HP	FR8	Side by Side	No		170A	36 x 54 x 16 (900 x 1350 x 400)	360 lb (163.3 kg)
NXBJ1250CS113F1110	125 HP	FR8	Side by Side	Yes		170A	54H x 16D x 36W (1350H x 400D x 900W)	360 lb (792 kg)
NXBJ1250CS203F1110	125 HP	FR8	Side by Side	No		170A	36 x 54 x 16 (900 x 1350 x 400)	360 lb (163.3 kg)
NXBJ1250CS213F1110	125 HP	FR8	Side by Side	Yes		170A	48H x 14D x 36W (1176H x 343D x 882W)	350 lb (770 kg)
NXBJ1250CS303F1110	125 HP	FR8	Side by Side	No		140A	60H x 14D x 36W (1470H x 343D x 882W)	440 lb (968 kg)
NXBJ1250CS313F1110	125 HP	FR8	Side by Side	Yes		140A	60H x 14D x 36W (1470H x 343D x 882W)	440 lb (968 kg)
NXBJ1500CS103F1110	150 HP	FR8	Side by Side	No		205A	36 x 54 x 16 (900 x 1350 x 400)	360 lb (163.3 kg)
NXBJ1500CS113F1110	150 HP	FR8	Side by Side	Yes		205A	54H x 16D x 36W (1350H x 400D x 900W)	360 lb (792 kg)
NXBJ1500CS203F1110	150 HP	FR8	Side by Side	No		205A	36 x 54 x 16 (900 x 1350 x 400)	360 lb (163.3 kg)
NXBJ1500CS213F1110	150 HP	FR8	Side by Side	Yes		205A	48H x 14D x 36W (1176H x 343D x 882W)	350 lb (770 kg)
NXBJ1500CS303F1110	150 HP	FR8	Side by Side	No		205A	60H x 14D x 36W (1470H x 343D x 882W)	440 lb (968 kg)
NXBJ1500CS313F1110	150 HP	FR8	Side by Side	Yes		205A	60H x 14D x 36W (1470H x 343D x 882W)	440 lb (968 kg)
460 Vac — Drive with Fused Disconnect								
NXBJ0015DS100F0000	1.5 HP	Call Customer Care	Vertical	No		3.3A	Contact Customer Care	Contact Customer Care (Call Customer Care)
NXBJ0015DS200F0000	1.5 HP	Call Customer Care	Vertical	No		3.3A	Contact Customer Care	Contact Customer Care (Call Customer Care)
NXBJ0015DS300F0000	1.5 HP	Call Customer Care	Vertical	No		3.3A	Contact Customer Care	Contact Customer Care (Call Customer Care)

Material Number	Horsepower	Frame Type	Layout	Auto Bypass	Additional Features	Current Ratings	Approximate, Dimensions in. (mm)	Weight
NXBJ0020DS100F0000	2 HP	Call Customer Care	Vertical	No		4.3A	Contact Customer Care	Contact Customer Care (Call Customer Care)
NXBJ0020DS200F0000	2 HP	Call Customer Care	Vertical	No		4.3A	Contact Customer Care	Contact Customer Care (Call Customer Care)
NXBJ0020DS300F0000	2 HP	Call Customer Care	Vertical	No		4.3A	Contact Customer Care	Contact Customer Care (Call Customer Care)
NXBJ0030DS100F0000	3 HP	Call Customer Care	Vertical	No		5.6A	Contact Customer Care	Contact Customer Care (Call Customer Care)
NXBJ0030DS200F0000	3 HP	Call Customer Care	Vertical	No		5.6A	Contact Customer Care	Contact Customer Care (Call Customer Care)
NXBJ0030DS300F0000	3 HP	Call Customer Care	Vertical	No		5.6A	Contact Customer Care	Contact Customer Care (Call Customer Care)
NXBJ0040DS100F0000	4 HP	Call Customer Care	Vertical	No		7.6A	Contact Customer Care	Contact Customer Care (Call Customer Care)
NXBJ0040DS200F0000	4 HP	Call Customer Care	Vertical	No		7.6A	Contact Customer Care	Contact Customer Care (Call Customer Care)
NXBJ0040DS300F0000	4 HP	Call Customer Care	Vertical	No		7.6A	Contact Customer Care	Contact Customer Care (Call Customer Care)
NXBJ0050DS100F0000	5 HP	Call Customer Care	Vertical	No		0.37A	Contact Customer Care	Contact Customer Care (Call Customer Care)
NXBJ0050DS200F0000	5 HP	Call Customer Care	Vertical	No		0.37A	Contact Customer Care	Contact Customer Care (Call Customer Care)
NXBJ0050DS300F0000	5 HP	Call Customer Care	Vertical	No		0.37A	Contact Customer Care	Contact Customer Care (Call Customer Care)
NXBJ0075DS100F0000	7.5 HP	Call Customer Care	Vertical	No			Contact Customer Care	Contact Customer Care (Call Customer Care)
NXBJ0075DS200F0000	7.5 HP	Call Customer Care	Vertical	No			Contact Customer Care	Contact Customer Care (Call Customer Care)
NXBJ0075DS300F0000	7.5 HP	Call Customer Care	Vertical	No			Contact Customer Care	Contact Customer Care (Call Customer Care)
NXBJ0100DS100F0000	10 HP	Call Customer Care	Vertical	No		16A	Contact Customer Care	Contact Customer Care (Call Customer Care)
NXBJ0100DS200F0000	10 HP	Call Customer Care	Vertical	No		16A	Contact Customer Care	Contact Customer Care (Call Customer Care)
NXBJ0100DS300F0000	10 HP	Call Customer Care	Vertical	No		16A	Contact Customer Care	Contact Customer Care (Call Customer Care)
NXBJ0150DS100F0000	15 HP	Call Customer Care	Vertical	No		23A	Contact Customer Care	Contact Customer Care (Call Customer Care)
NXBJ0150DS200F0000	15 HP	Call Customer Care	Vertical	No		23A	Contact Customer Care	Contact Customer Care (Call Customer Care)
NXBJ0150DS300F0000	15 HP	Call Customer Care	Vertical	No		23A	Contact Customer Care	Contact Customer Care (Call Customer Care)
NXBJ0200DS100F0000	20 HP	Call Customer Care	Vertical	No		31A	Contact Customer Care	Contact Customer Care (Call Customer Care)
NXBJ0200DS200F0000	20 HP	Call Customer Care	Vertical	No		31A	Contact Customer Care	Contact Customer Care (Call Customer Care)
NXBJ0200DS300F0000	20 HP	Call Customer Care	Vertical	No		31A	Contact Customer Care	Contact Customer Care (Call Customer Care)
NXBJ0250DS100F0000	25 HP	Call Customer Care	Vertical	No		38A	Contact Customer Care	Contact Customer Care (Call Customer Care)
NXBJ0250DS200F0000	25 HP	Call Customer Care	Vertical	No		38A	Contact Customer Care	Contact Customer Care (Call Customer Care)
NXBJ0250DS300F0000	25 HP	Call Customer Care	Vertical	No		38A	Contact Customer Care	Contact Customer Care (Call Customer Care)
NXBJ0250DS400F0000	25 HP	FR6	Vertical	No		38A	36H x 12D x 30W (882H x 294D x 735W)	124 lb (272.8 kg)
NXBJ0300DS100F0000	30 HP	Call Customer Care	Vertical	No		46A	Contact Customer Care	Contact Customer Care (Call Customer Care)
NXBJ0300DS200F0000	30 HP	Call Customer Care	Vertical	No		46A	Contact Customer Care	Contact Customer Care (Call Customer Care)
NXBJ0300DS300F0000	30 HP	Call Customer Care	Vertical	No		46A	Contact Customer Care	Contact Customer Care (Call Customer Care)
NXBJ0400DS100F0000	40 HP	FR4	Vertical	No		61A	9.5 x 40 x 9.5 (237.5 x 1000 x 237.5)	43 lb (19.5 kg)
NXBJ0400DS200F0000	40 HP	Call Customer Care	Vertical	No		61A	Contact Customer Care	Contact Customer Care (Call Customer Care)
NXBJ0400DS300F0000	40 HP	Call Customer Care	Vertical	No		61A	Contact Customer Care	Contact Customer Care (Call Customer Care)
NXBJ0500DS100F0000	50 HP	Call Customer Care	Vertical	No		72A	Contact Customer Care	Contact Customer Care (Call Customer Care)
NXBJ0500DS200F0000	50 HP	Call Customer Care	Vertical	No		72A	Contact Customer Care	Contact Customer Care (Call Customer Care)

Material Number	Horsepower	Frame Type	Layout	Auto Bypass	Additional Features	Current Ratings	Approximate, Dimensions in. (mm)	Weight
NXBJ0500DS300F0000	50 HP	Call Customer Care	Vertical	No		72A	Contact Customer Care	Contact Customer Care (Call Customer Care)
NXBJ0600DS100F0000	60 HP	FR7	Vertical	No		87A	16 x 62 x 13 (400 x 1550 x 325)	154 lb (69.8 kg)
NXBJ0600DS200F0000	60 HP	Call Customer Care	Vertical	No		87A	Contact Customer Care	Contact Customer Care (Call Customer Care)
NXBJ0600DS300F0000	60 HP	Call Customer Care	Vertical	No		87A	Contact Customer Care	Contact Customer Care (Call Customer Care)
NXBJ0750DS100F0000	75 HP	FR7	Vertical	No		105A	16 x 62 x 13 (400 x 1550 x 325)	154 lb (69.8 kg)
NXBJ0750DS200F0000	75 HP	FR7	Vertical	No		105A	16 x 62 x 13 (400 x 1550 x 325)	154 lb (69.8 kg)
NXBJ0750DS300F0000	75 HP	FR7	Vertical	No		105A	36 x 48 x 12 (900 x 1250 x 300)	193 lb (87.5 kg)
NXBJ1000DS100F0000	100 HP	Call Customer Care	Side by Side	No		140A	Contact Customer Care	Contact Customer Care (Call Customer Care)
NXBJ1000DS200F0000	100 HP	Call Customer Care	Side by Side	No		140A	Contact Customer Care	Contact Customer Care (Call Customer Care)
NXBJ1000DS300F0000	100 HP	Call Customer Care	Side by Side	No		140A	Contact Customer Care	Contact Customer Care (Call Customer Care)
NXBJ1250DS100F0000	125 HP	Call Customer Care	Side by Side	No		170A	Contact Customer Care	Contact Customer Care (Call Customer Care)
NXBJ1250DS200F0000	125 HP	Call Customer Care	Side by Side	No		170A	Contact Customer Care	Contact Customer Care (Call Customer Care)
NXBJ1250DS300F0000	125 HP	Call Customer Care	Side by Side	No		170A	Contact Customer Care	Contact Customer Care (Call Customer Care)
NXBJ1500DS100F0000	150 HP	Call Customer Care	Side by Side	No		205A	Contact Customer Care	Contact Customer Care (Call Customer Care)
NXBJ1500DS200F0000	150 HP	Call Customer Care	Side by Side	No		205A	Contact Customer Care	Contact Customer Care (Call Customer Care)
NXBJ1500DS300F0000	150 HP	Call Customer Care	Side by Side	No		205A	Contact Customer Care	Contact Customer Care (Call Customer Care)
575 Vac — Drive with 2 contactor bypass								
NXBL0030CS10200000	3 HP	FR4	Vertical	No		4.5A	9.5 x 40 x 9.5 (237.5 x 1000 x 237.5)	43 lb (19.5 kg)
NXBL0030CS20200000	3 HP	FR4	Vertical	No		4.5A	9.5 x 40 x 9.5 (237.5 x 1000 x 237.5)	43 lb (19.5 kg)
NXBL0040CS10200000	4 HP	FR4	Vertical	No		5.5A	9.5 x 40 x 9.5 (237.5 x 1000 x 237.5)	43 lb (19.5 kg)
NXBL0040CS20200000	4 HP	FR4	Vertical	No		5.5A	9.5 x 40 x 9.5 (237.5 x 1000 x 237.5)	43 lb (19.5 kg)
NXBL0050CS10200000	5 HP	FR4	Vertical	No		7.5A	9.5 x 40 x 9.5 (237.5 x 1000 x 237.5)	43 lb (19.5 kg)
NXBL0050CS20200000	5 HP	FR4	Vertical	No		7.5A	9.5 x 40 x 9.5 (237.5 x 1000 x 237.5)	43 lb (19.5 kg)
NXBL0075CS10200000	7.5 HP	FR4	Vertical	No		0.42A	9.5 x 40 x 9.5 (237.5 x 1000 x 237.5)	43 lb (19.5 kg)
NXBL0075CS20200000	7.5 HP	FR4	Vertical	No		0.42A	9.5 x 40 x 9.5 (237.5 x 1000 x 237.5)	43 lb (19.5 kg)
NXBL0100CS10200000	10 HP	FR5	Vertical	No		13.5A	11 x 46 x 10.5 (275 x 1150 x 262.5)	62 lb (28.1 kg)
NXBL0100CS20200000	10 HP	FR5	Vertical	No		13.5A	11 x 46 x 10.5 (275 x 1150 x 262.5)	62 lb (28.1 kg)
NXBL0150CS10200000	15 HP	FR5	Vertical	No		18A	11 x 46 x 10.5 (275 x 1150 x 262.5)	62 lb (28.1 kg)
NXBL0150CS20200000	15 HP	FR5	Vertical	No		18A	11 x 46 x 10.5 (275 x 1150 x 262.5)	62 lb (28.1 kg)
NXBL0200CS10200000	20 HP	FR5	Vertical	No		22A	11 x 46 x 10.5 (275 x 1150 x 262.5)	62 lb (28.1 kg)
NXBL0200CS20200000	20 HP	FR5	Vertical	No		22A	11 x 46 x 10.5 (275 x 1150 x 262.5)	62 lb (28.1 kg)
NXBL0250CS10200000	25 HP	FR6	Vertical	No		27A	14 x 53 x 12 (350 x 1325 x 300)	99 lb (44.9 kg)
NXBL0250CS20200000	25 HP	FR6	Vertical	No		27A	14 x 53 x 12 (350 x 1325 x 300)	99 lb (44.9 kg)
NXBL0300CS10200000	30 HP	FR6	Vertical	No		34A	14 x 53 x 12 (350 x 1325 x 300)	99 lb (44.9 kg)
NXBL0300CS20200000	30 HP	FR6	Vertical	No		34A	14 x 53 x 12 (350 x 1325 x 300)	99 lb (44.9 kg)
NXBL0400CS10200000	40 HP	FR6	Vertical	No		41A	14 x 53 x 12 (350 x 1325 x 300)	99 lb (44.9 kg)
NXBL0400CS20200000	40 HP	FR6	Vertical	No		41A	14 x 53 x 12 (350 x 1325 x 300)	99 lb (44.9 kg)
NXBL0500CS10200000	50 HP	FR7	Vertical	No		52A	16 x 62 x 13 (400 x 1550 x 325)	154 lb (69.8 kg)
NXBL0500CS20200000	50 HP	FR7	Vertical	No		52A	16 x 62 x 13 (400 x 1550 x 325)	154 lb (69.8 kg)
NXBL0600CS10200000	60 HP	FR7	Vertical	No		62A	16 x 62 x 13 (400 x 1550 x 325)	154 lb (69.8 kg)
NXBL0600CS20200000	60 HP	FR7	Vertical	No		62A	16 x 62 x 13 (400 x 1550 x 325)	154 lb (69.8 kg)
NXBL0750CS10200000	75 HP	FR7	Vertical	No		80A	16 x 62 x 13 (400 x 1550 x 325)	154 lb (69.8 kg)
NXBL0750CS20200000	75 HP	FR7	Vertical	No		80A	16 x 62 x 13 (400 x 1550 x 325)	154 lb (69.8 kg)
NXBL1000CS10200000	100 HP	FR8	Side by Side	No		100A	36 x 54 x 16 (900 x 1350 x 400)	360 lb (163.3 kg)
NXBL1000CS20200000	100 HP	FR8	Side by Side	No		100A	36 x 54 x 16 (900 x 1350 x 400)	360 lb (163.3 kg)
NXBL1500CS10200000	150 HP	FR8	Side by Side	No		144A	36 x 54 x 16 (900 x 1350 x 400)	360 lb (163.3 kg)
NXBL1500CS20200000	150 HP	FR8	Side by Side	No		144A	36 x 54 x 16 (900 x 1350 x 400)	360 lb (163.3 kg)
575 Vac — Drive with 3 contactor bypass								
NXBL0030CS103F1110	3 HP	FR4	Vertical	No		4.5A	9.5 x 40 x 9.5 (237.5 x 1000 x 237.5)	43 lb (19.5 kg)
NXBL0030CS113F1110	3 HP	FR6	Vertical	Yes		4.5A	53H x 12D x 14W (1298H x 294D x 343W)	99 lb (217.8 kg)
NXBL0030CS203F1110	3 HP	FR4	Vertical	No		4.5A	9.5 x 40 x 9.5 (237.5 x 1000 x 237.5)	43 lb (19.5 kg)
NXBL0030CS213F1110	3 HP	FR6	Vertical	Yes		4.5A	48H x 14D x 36W (1176H x 343D x 882W)	99 lb (217.8 kg)
NXBL0030CS303F1110	3 HP	FR6	Vertical	No		4.5A	36H x 12D x 30W (882H x 294D x 735W)	124 lb (272.8 kg)

Material Number	Horsepower	Frame Type	Layout	Auto Bypass	Additional Features	Current Ratings	Approximate, Dimensions in. (mm)	Weight
NXBL0030CS313F1110	3 HP	FR6	Vertical	Yes		4.5A	36H x 12D x 30W (882H x 294D x 735W)	124 lb (272.8 kg)
NXBL0040CS103F1110	4 HP	FR4	Vertical	No		5.5A	9.5 x 40 x 9.5 (237.5 x 1000 x 237.5)	43 lb (19.5 kg)
NXBL0040CS113F1110	4 HP	FR6	Vertical	Yes		5.5A	53H x 12D x 14W (1298H x 294D x 343W)	99 lb (217.8 kg)
NXBL0040CS203F1110	4 HP	FR4	Vertical	No		5.5A	9.5 x 40 x 9.5 (237.5 x 1000 x 237.5)	43 lb (19.5 kg)
NXBL0040CS213F1110	4 HP	FR6	Vertical	Yes		5.5A	48H x 14D x 36W (1176H x 343D x 882W)	99 lb (217.8 kg)
NXBL0040CS303F1110	4 HP	FR6	Vertical	No		5.5A	36H x 12D x 30W (882H x 294D x 735W)	124 lb (272.8 kg)
NXBL0040CS313F1110	4 HP	FR6	Vertical	Yes		5.5A	36H x 12D x 30W (882H x 294D x 735W)	124 lb (272.8 kg)
NXBL0050CS103F1110	5 HP	FR4	Vertical	No		7.5A	9.5 x 40 x 9.5 (237.5 x 1000 x 237.5)	43 lb (19.5 kg)
NXBL0050CS113F1110	5 HP	FR6	Vertical	Yes		7.5A	53H x 12D x 14W (1298H x 294D x 343W)	99 lb (217.8 kg)
NXBL0050CS203F1110	5 HP	FR4	Vertical	No		7.5A	9.5 x 40 x 9.5 (237.5 x 1000 x 237.5)	43 lb (19.5 kg)
NXBL0050CS213F1110	5 HP	FR6	Vertical	Yes		7.5A	48H x 14D x 36W (1176H x 343D x 882W)	99 lb (217.8 kg)
NXBL0050CS303F1110	5 HP	FR6	Vertical	No		7.5A	36H x 12D x 30W (882H x 294D x 735W)	124 lb (272.8 kg)
NXBL0050CS313F1110	5 HP	FR6	Vertical	Yes		7.5A	36H x 12D x 30W (882H x 294D x 735W)	124 lb (272.8 kg)
NXBL0075CS103F1110	7.5 HP	FR4	Vertical	No		0.42A	9.5 x 40 x 9.5 (237.5 x 1000 x 237.5)	43 lb (19.5 kg)
NXBL0075CS113F1110	7.5 HP	FR6	Vertical	Yes		10A	53H x 12D x 14W (1298H x 294D x 343W)	99 lb (217.8 kg)
NXBL0075CS203F1110	7.5 HP	FR4	Vertical	No		0.42A	9.5 x 40 x 9.5 (237.5 x 1000 x 237.5)	43 lb (19.5 kg)
NXBL0075CS213F1110	7.5 HP	FR6	Vertical	Yes		10A	48H x 14D x 36W (1176H x 343D x 882W)	99 lb (217.8 kg)
NXBL0075CS303F1110	7.5 HP	FR6	Vertical	No		10A	36H x 12D x 30W (882H x 294D x 735W)	124 lb (272.8 kg)
NXBL0075CS313F1110	7.5 HP	FR6	Vertical	Yes		10A	36H x 12D x 30W (882H x 294D x 735W)	124 lb (272.8 kg)
NXBL0100CS103F1110	10 HP	FR5	Vertical	No		13.5A	11 x 46 x 10.5 (275 x 1150 x 262.5)	62 lb (28.1 kg)
NXBL0100CS113F1110	10 HP	FR6	Vertical	Yes		13.5A	53H x 12D x 14W (1298H x 294D x 343W)	99 lb (217.8 kg)
NXBL0100CS203F1110	10 HP	FR5	Vertical	No		13.5A	11 x 46 x 10.5 (275 x 1150 x 262.5)	62 lb (28.1 kg)
NXBL0100CS213F1110	10 HP	FR6	Vertical	Yes		13.5A	48H x 14D x 36W (1176H x 343D x 882W)	99 lb (217.8 kg)
NXBL0100CS303F1110	10 HP	FR6	Vertical	No		13.5A	36H x 12D x 30W (882H x 294D x 735W)	124 lb (272.8 kg)
NXBL0100CS313F1110	10 HP	FR6	Vertical	Yes		13.5A	36H x 12D x 30W (882H x 294D x 735W)	124 lb (272.8 kg)
NXBL0150CS103F1110	15 HP	FR5	Vertical	No		18A	11 x 46 x 10.5 (275 x 1150 x 262.5)	62 lb (28.1 kg)
NXBL0150CS113F1110	15 HP	FR6	Vertical	Yes		18A	53H x 12D x 14W (1298H x 294D x 343W)	99 lb (217.8 kg)
NXBL0150CS203F1110	15 HP	FR5	Vertical	No		18A	11 x 46 x 10.5 (275 x 1150 x 262.5)	62 lb (28.1 kg)
NXBL0150CS213F1110	15 HP	FR6	Vertical	Yes		18A	48H x 14D x 36W (1176H x 343D x 882W)	99 lb (217.8 kg)
NXBL0150CS303F1110	15 HP	FR6	Vertical	No		18A	36H x 12D x 30W (882H x 294D x 735W)	124 lb (272.8 kg)
NXBL0150CS313F1110	15 HP	FR6	Vertical	Yes		18A	36H x 12D x 30W (882H x 294D x 735W)	124 lb (272.8 kg)
NXBL0200CS103F1110	20 HP	FR5	Vertical	No		22A	11 x 46 x 10.5 (275 x 1150 x 262.5)	62 lb (28.1 kg)
NXBL0200CS113F1110	20 HP	FR6	Vertical	Yes		22A	53H x 12D x 14W (1298H x 294D x 343W)	99 lb (217.8 kg)
NXBL0200CS203F1110	20 HP	FR5	Vertical	No		22A	11 x 46 x 10.5 (275 x 1150 x 262.5)	62 lb (28.1 kg)
NXBL0200CS213F1110	20 HP	FR6	Vertical	Yes		22A	48H x 14D x 36W (1176H x 343D x 882W)	99 lb (217.8 kg)
NXBL0200CS303F1110	20 HP	FR6	Vertical	No		22A	36H x 12D x 30W (882H x 294D x 735W)	124 lb (272.8 kg)
NXBL0200CS313F1110	20 HP	FR6	Vertical	Yes		22A	36H x 12D x 30W (882H x 294D x 735W)	124 lb (272.8 kg)
NXBL0250CS103F1110	25 HP	FR6	Vertical	No		27A	14 x 53 x 12 (350 x 1325 x 300)	99 lb (44.9 kg)
NXBL0250CS113F1110	25 HP	FR6	Vertical	Yes		27A	53H x 12D x 14W (1298H x 294D x 343W)	99 lb (217.8 kg)
NXBL0250CS203F1110	25 HP	FR6	Vertical	No		27A	14 x 53 x 12 (350 x 1325 x 300)	99 lb (44.9 kg)
NXBL0250CS213F1110	25 HP	FR6	Vertical	Yes		27A	48H x 14D x 36W (1176H x 343D x 882W)	99 lb (217.8 kg)
NXBL0250CS303F1110	25 HP	FR6	Vertical	No		27A	36H x 12D x 30W (882H x 294D x 735W)	124 lb (272.8 kg)
NXBL0250CS313F1110	25 HP	FR6	Vertical	Yes		27A	36H x 12D x 30W (882H x 294D x 735W)	124 lb (272.8 kg)
NXBL0300CS103F1110	30 HP	FR6	Vertical	No		34A	14 x 53 x 12 (350 x 1325 x 300)	99 lb (44.9 kg)
NXBL0300CS113F1110	30 HP	FR6	Vertical	Yes		34A	53H x 12D x 14W (1298H x 294D x 343W)	99 lb (217.8 kg)
NXBL0300CS203F1110	30 HP	FR6	Vertical	No		34A	14 x 53 x 12 (350 x 1325 x 300)	99 lb (44.9 kg)
NXBL0300CS213F1110	30 HP	FR6	Vertical	Yes		34A	48H x 14D x 36W (1176H x 343D x 882W)	99 lb (217.8 kg)
NXBL0300CS303F1110	30 HP	FR6	Vertical	No		34A	36H x 12D x 30W (882H x 294D x 735W)	124 lb (272.8 kg)
NXBL0300CS313F1110	30 HP	FR6	Vertical	Yes		34A	36H x 12D x 30W (882H x 294D x 735W)	124 lb (272.8 kg)
NXBL0400CS103F1110	40 HP	FR6	Vertical	No		41A	14 x 53 x 12 (350 x 1325 x 300)	99 lb (44.9 kg)
NXBL0400CS113F1110	40 HP	FR7	Vertical	Yes		41A	62H x 13D x 16W (1574H x 339D x 406W)	154 lb (338.8 kg)
NXBL0400CS203F1110	40 HP	FR6	Vertical	No		41A	14 x 53 x 12 (350 x 1325 x 300)	99 lb (44.9 kg)
NXBL0400CS213F1110	40 HP	FR7	Vertical	Yes		41A	48H x 14D x 36W (1176H x 343D x 882W)	154 lb (338.8 kg)
NXBL0400CS303F1110	40 HP	FR7	Vertical	No		41A	48H x 12D x 36W (1176H x 294D x 882W)	193 lb (424.6 kg)
NXBL0400CS313F1110	40 HP	FR7	Vertical	Yes		41A	48H x 12D x 36W (1176H x 294D x 882W)	193 lb (424.6 kg)
NXBL0500CS103F1110	50 HP	FR7	Vertical	No		52A	16 x 62 x 13 (400 x 1550 x 325)	154 lb (69.8 kg)
NXBL0500CS113F1110	50 HP	FR7	Vertical	Yes		52A	62H x 13D x 16W (1574H x 339D x 406W)	154 lb (338.8 kg)
NXBL0500CS203F1110	50 HP	FR7	Vertical	No		52A	16 x 62 x 13 (400 x 1550 x 325)	154 lb (69.8 kg)
NXBL0500CS213F1110	50 HP	FR7	Vertical	Yes		52A	48H x 14D x 36W (1176H x 343D x 882W)	154 lb (338.8 kg)
NXBL0500CS303F1110	50 HP	FR7	Vertical	No		52A	48H x 12D x 36W (1176H x 294D x 882W)	193 lb (424.6 kg)
NXBL0500CS313F1110	50 HP	FR7	Vertical	Yes		52A	48H x 12D x 36W (1176H x 294D x 882W)	193 lb (424.6 kg)
NXBL0600CS103F1110	60 HP	FR7	Vertical	No		62A	16 x 62 x 13 (400 x 1550 x 325)	154 lb (69.8 kg)
NXBL0600CS113F1110	60 HP	FR8	Side by Side	Yes		62A	54H x 16D x 36W (1350H x 400D x 900W)	360 lb (792 kg)

Variable Frequency Drives

Material Number	Horsepower	Frame Type	Layout	Auto Bypass	Additional Features	Current Ratings	Approximate, Dimensions in. (mm)	Weight
NXBL0600CS203F1110	60 HP	FR7	Vertical	No		62A	16 x 62 x 13 (400 x 1550 x 325)	154 lb (69.8 kg)
NXBL0600CS213F1110	60 HP	FR8	Side by Side	Yes		62A	48H x 14D x 36W (1176H x 343D x 882W)	360 lb (792 kg)
NXBL0600CS303F1110	60 HP	FR8	Side by Side	No		62A	60H x 14D x 36W (1470H x 343D x 882W)	440 lb (968 kg)
NXBL0600CS313F1110	60 HP	FR8	Side by Side	Yes		62A	60H x 14D x 36W (1470H x 343D x 882W)	440 lb (968 kg)
NXBL0750CS103F1110	75 HP	FR7	Vertical	No		80A	16 x 62 x 13 (400 x 1550 x 325)	154 lb (69.8 kg)
NXBL0750CS113F1110	75 HP	FR8	Side by Side	Yes		80A	54H x 16D x 36W (1350H x 400D x 900W)	360 lb (792 kg)
NXBL0750CS203F1110	75 HP	FR7	Vertical	No		80A	16 x 62 x 13 (400 x 1550 x 325)	154 lb (69.8 kg)
NXBL0750CS213F1110	75 HP	FR8	Side by Side	Yes		80A	48H x 14D x 36W (1176H x 343D x 882W)	360 lb (792 kg)
NXBL1000CS103F1110	100 HP	FR8	Side by Side	No		100A	36 x 54 x 16 (900 x 1350 x 400)	360 lb (163.3 kg)
NXBL1000CS113F1110	100 HP	FR8	Side by Side	Yes		100A	54H x 16D x 36W (1350H x 400D x 900W)	360 lb (792 kg)
NXBL1000CS203F1110	100 HP	FR8	Side by Side	No		100A	36 x 54 x 16 (900 x 1350 x 400)	360 lb (163.3 kg)
NXBL1000CS213F1110	100 HP	FR8	Side by Side	Yes		100A	48H x 14D x 36W (1176H x 343D x 882W)	360 lb (792 kg)
NXBL1500CS103F1110	150 HP	FR8	Side by Side	No		144A	36 x 54 x 16 (900 x 1350 x 400)	360 lb (163.3 kg)
NXBL1500CS203F1110	150 HP	FR8	Side by Side	No		144A	36 x 54 x 16 (900 x 1350 x 400)	360 lb (163.3 kg)

Variable Frequency Drive Accessories

Material Number	Description	Used With
32006628-001/U	Panel mount kit, NEMA 12 Enclosure, 6ft	NXS
32006629-001/U	Blank display	NXS
32006629-002/U	Alphanumeric Display	NXS
32006629-003/U	7 segment display for NXL	NXL
32006629-004/U	Variable Frequency Drive RS232 Adapter	NXL
32006629-010/U	2M RS232 SERIAL LINK CABLE	NXS/NXL
32006629-011/U	1.5M RS232 PC-CABLE FOR NXS/NXL MODELS	NXS/NXL
32006630-001/U	Lonbus Card	NXS/NXL
32006630-002/U	Modbus Card	NXS/NXL
32006630-003/U	2 RO (NO/NC)	NXS/NXL
32006630-004/U	6DI/DO Programmable	NXS/NXL
32006630-005/U	6DI, 1DO, 2AI, 1AO	NXS/NXL
32006630-006/U	1RO (NO/NC), 1RO (NO)	NXS/NXL
32006630-007/U	3RO (NO)	NXS/NXL
32006630-008/U	1AI (mA), 2AO (mA)	NXS/NXL
32006630-013/U	BACnet card	NXS/NXL
32006662-002/U	NXS demo	NXS

SmartVFD HVAC Accessories

Material Number	Description	Used With
HVFDSDMOUNTKIT/U	SmartVFD HVAC, Panel mount kit, NEMA 12 Enclosure, 6 ft	SmartVFD HVAC

Variable Frequency Drive Replacement Parts

Material Number	Description	Frame Size	Used With
32006803-001/U	Control Module NXS		NXS
32006803-002/U	Replacement Fan Assembly for Frame size 4 NXS or NXL	Frame size 4	NXS or NXL*
32006803-003/U	Replacement Fan Assembly for Frame size 5 NXS or NXL	Frame size 5	NXS or NXL*
32006803-004/U	Replacement Fan Assembly for Frame size 6 NXS or NXL	Frame size 6	NXS or NXL*
32006803-005/U	Replacement Fan Assembly for Frame size 7 NXS or NXL	Frame size 7	NXS or NXL*

* For frame sizes 8-9, contact Customer Care with model and serial numbers as fan is dependent on date product was built.

HP970 Pneumatic Humidistat

HP970 Typical Piping

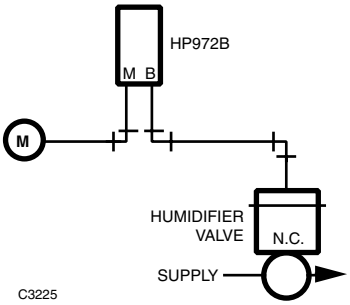

Two-pipe, single setpoint, pneumatic humidistat used to provide proportional control of pneumatic valves on humidification or dehumidification systems.

- Durable HP970 series humidistat.
- Pilot operated for high capacity.
- Direct Acting (DA) and Reverse Acting (RA) models are available.
- Vertical or horizontal mounting.
- Backplate has molded air connections; no separate fittings needed.
- Variety of cover finishes and display styles available.

Applications: Humidity
Airflow Usage: 0.011 scfm (5.2 mL/s)
Maximum Safe Operating Pressure (psi): 25 psi
Maximum Safe Operating Pressure (kPa): 170 kPa
Temperature Range: 45°F to 125°F (7°C to 52°C)
Shipping and Storage Temperature Range: -30 to +150°F (-34 to +66°C)
Dimensions: 3 1/4 in. high x 2 in. wide x 1 5/8 in. deep (83 mm high x 51 mm wide x 41 mm deep)

Accessories
14002430-001/U – Thermostat guard
14003192-001/U – Wall plate adapter kit. Adapts HP970 or TP970 series stats to HP900 and TP900 flush mounted and TP910 series flush or surface mounted installations
305965/U – 1-1/2 in. diameter, 1/8 NPT center stem back mount Pressure Indicating gauge (0 to 30 psi scale) with ± 4% accuracy
AK3863/U – Thermostat Tool Kit,
CCT729A/U – Gauge adapter for calibration. Add 305965/U (0 to 30 psi gauge) for complete tool
CCT735A/U – Thermostat calibration tool includes Allen wrench for cover installation.

Replacement Parts
14002053-001/U – Back Plate Assembly
14002573-001/U – Modernization Kit to convert all 1 & 2 pipe Honeywell & competitive pneumatic stats to TP970, TP971A, TP972, TP973, TP974, TP9600 family; HP970, HP971 and HP972

Material Number	Product Action	Number of Pipes	Scale Markings	Throttling Range (% RH)	Setpoint	Comments
HP970A1009/U	Direct Acting	2	15 to 75% RH	3 to 15% RH	Single	Order Cover Separately
HP970B1007/U	Reverse Acting	2	15 to 75% RH	3 to 15% RH	Single	Order Cover Separately
HP970B1015/U	Reverse Acting	2	65 to 95% RH	3 to 15% RH	Single	Order Cover Separately

HP972 Pneumatic Humidistat

A proportioning pneumatic humidistat used on one- or two-pipe installations for controlling actuators on valves and dampers in air conditioning systems for humidification or dehumidification control.

- Durable HP970 series humidistat.
- Snap-on mounting to backplate.
- Vertical or horizontal mounting.
- Backplate has molded air connections; no separate fittings needed.
- Variety of cover finishes and display styles available.
- Wide throttling range.

Applications: Humidity
Airflow Usage: 0.011 scfm (5.2 mL/s)
Maximum Safe Operating Pressure (psi): 25 psi
Maximum Safe Operating Pressure (kPa): 170 kPa
Temperature Range: 45°F to 125°F (7°C to 52°C)
Shipping and Storage Temperature Range: -30 to +150°F (-34 to +66°C)
Dimensions: 3 1/4 in. high x 2 in. wide x 1 5/8 in. deep (83 mm high x 51 mm wide x 41 mm deep)

Accessories
14002362-001/U – Duct Sampling Chamber
14002430-001/U – Thermostat guard
14003192-001/U – Wall plate adapter kit. Adapts HP970 or TP970 series stats to HP900 and TP900 flush mounted and TP910 series flush or surface mounted installations

305965/U – 1-1/2 in. diameter, 1/8 NPT center stem back mount Pressure Indicating gauge (0 to 30 psi scale) with ± 4% accuracy
AK3863/U – Thermostat Tool Kit,
CCT729A/U – Gauge adapter for calibration. Add 305965/U (0 to 30 psi gauge) for complete tool
CCT735A/U – Thermostat calibration tool includes Allen wrench for cover installation.

Replacement Parts
14002053-001/U – Back Plate Assembly
14002496-003/U – Nylon element assembly, with spring
14002573-001/U – Modernization Kit to convert all 1 & 2 pipe Honeywell & competitive pneumatic stats to TP970, TP971A, TP972, TP973, TP974, TP9600 family; HP970, HP971 and HP972

Typical Two-Pipe HP972B Hook-up

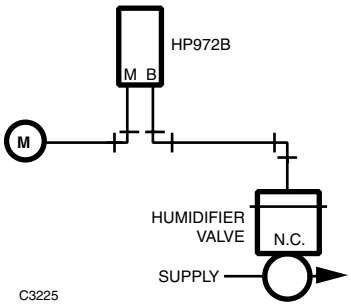

Typical One-pipe HP972B Hook-up

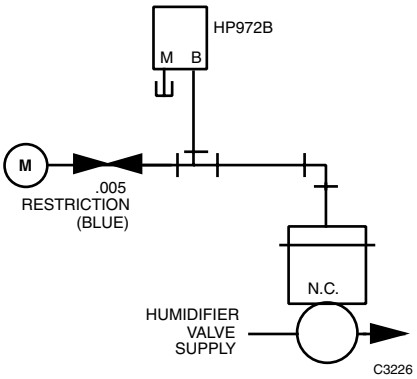

Material Number	Product Action	Number of Pipes	Scale Markings	Throttling Range (% RH)	Setpoint	Description	Comments
HP972B1005/U	Reverse Acting	1 or 2	15 to 75% RH	7 to 35% RH	Single	Pneumatic Humidity Controller, number of pipes: 1 or 2, Action: Reverse	Order Cover Separately

Humidistat Accessories

Material Number	Description	Used With	
CCT729A/U	Gauge Adapter for Calibration. Add 305965 0 to 30 psi gauge for Complete Tool.	HP970; HP972	
CCT735A/U	Thermostat Calibration Tool includes Allen wrench for cover installation.	HP970; HP972	

Humidistat Cover Assemblies

Applications: Accessory or Replacement Part

Material Number	Scale Markings	Description	Used With	
14004406-910H/U	15 to 75% RH	Humidistat Satin Chrome Cover Kit with setpoint display and Honeywell logo for vertical and horizontal mounting, scale range 15 to 75% RH. Includes the Setpoint Knob Insert	HP970; HP972	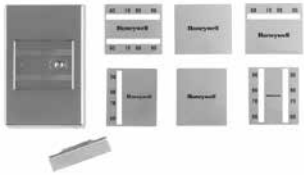

Replacement Parts

Material Number	Description	Used With
14002496-003/U	Nylon element assembly, with Spring	HP970B1015; HP972B

LP907 Airstream Insertion Pneumatic Thermostat

One-pipe, single setpoint, pneumatic thermostat used to provide proportional control of pneumatic valves and damper actuators in heating and air conditioning systems. Commonly used as discharge controllers for unit ventilators.

- Rod and tube insertion sensing element.
- Wide throttling range.
- Gage tee and tank valve facilitate checking line pressures.

Applications: Low Limit controller
Air Connections: Barb fittings 1/4 in. (6 mm) poly tubing
Airflow Usage: 0.011 scfm (5.2 mL/s)
Number of Pipes: 1
Sensor Element: Invar rod and seamless brass tube, 18 3/4 in. (476 mm) long and 11/32 in. (9 mm) diameter; Remote Bulb
Maximum Safe Operating Pressure (psi): 25 psi
Maximum Safe Operating Pressure (kPa): 170 kPa
Dimensions: 5 7/16 in. high x 1 1/16 in. wide x 2 1/4 in. deep (138 mm high x 27 mm wide x 57 mm deep)
Mounting: Insertion with locknut on boss of insertion shank
Includes: Fittings for mounting on sheet metal duct. Order restrictor separately.

Accessories
CCT2085/U – Pneumatic Fitting – Gauge Adapter fits any standard 1/8 in. NPT gauge,
14002913-002/U – 0.007 in. Red in-line Filtered Restriction Assembly; Inlet: 1/4 in., Outlets: 1/4 in. Order in Quantities of 10
14002913-003/U – External Restriction Assembly. 0.007 in. Restriction, Red, Inlet 1/4 in; Outlet 1/4 in. and 5/32 in.

Typical Heating/Cooling Application

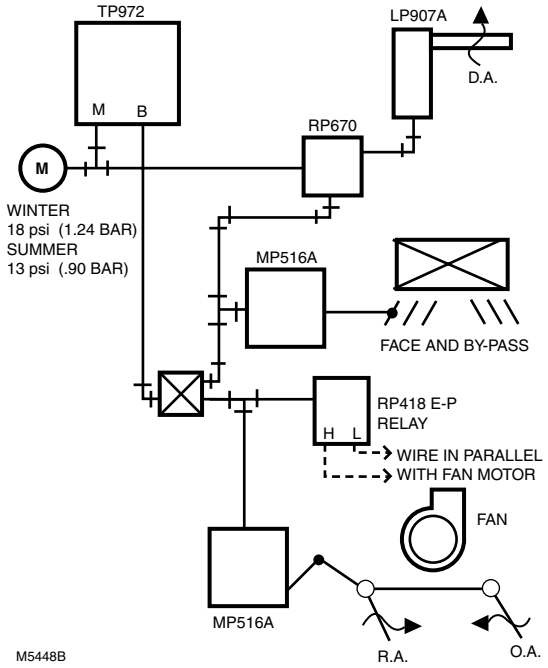

Typical Duct Mounted Application

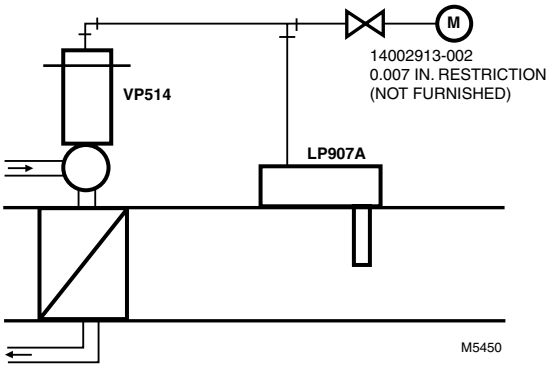

Material Number	Product Action	Setpoint	Temperature Range	Setpoint Temperature Range	Shipping and Storage Temperature Range	Throttling Range	Capacity
LP907A1002/U	Direct Acting	Single	40°F to 140°F (4°C to 60°C)	40°F to 140°F (4°C to 60°C)	150°F maximum (66°C maximum)	10°F to 70°F (6°C to 39°C)	Low
LP907A1044/U	Direct Acting	Single	135°F maximum (57°C maximum)	40°F to 140°F (4°C to 60°C)	150°F maximum (66°C maximum)	5°F to 35°F (3°C to 19°C)	Low

LP916 Pneumatic Thermostat

Two-pipe, single temperature, unit mounted, remote bulb pneumatic thermostat used to provide proportional control of pneumatic valves and damper actuators in heating and air conditioning systems.

- Liquid filled remote bulb.
- Direct Acting (DA), Reverse Acting (RA) and Heating/Cooling (DA/RA) models are available.

Applications: Typical applications for the LP916A are duct-mounted and mixed air control. The LP916B is typically used for fan coil unit control. Typical applications for the reverse acting LP916C are cooling coil control or fan coil control.
Air Connections: Barb fittings 1/4 in. (6 mm)
Number of Pipes 2
Setpoint: Single
Maximum Safe Operating Pressure (psi): 25 psi
Maximum Safe Operating Pressure (kPa): 170 kPa
Temperature Range: 135°F maximum (57°C maximum)
Shipping and Storage Temperature Range: 150°F maximum (66°C maximum)

Dimensions: 4 3/4 in. high x 3 3/4 in. wide x 3 in. deep (121 mm high x 95 mm wide x 76 mm deep)

Accessories:
107324A/U – Capillary Holder Assembly for duct insertion, 8 3/8 in. long

Replacement Parts:
14003113-002/U – Repair kit containing 0.007 in. restrictor plate, filters, and gaskets

Material Number	Airflow Usage	Product Action	Scale Markings	Sensor Element	Changeover Pressure (psi)	Changeover Pressure (kPa)	Setpoint Temperature Range	Throttling Range	Mounting	Includes
LP916A1019/U	0.022 scfm (10.4 mL/s) with 0.007 in. restriction	Direct Acting	Warmer / Cooler	Bulb 1/2 x 5 7/8 in., capillary 36 in. (914 mm) long; Remote Bulb			65°F to 85°F (19°C to 30°C)	3.5°F (2°C)	In compartment of a unit ventilator	Integral Mounting Bracket and 304528A Bag Assembly (mounting hardware). Order bulb hangers (316297-00021) separately.
LP916A1134/U	0.011 scfm (5.2 mL/s) with 0.005 in. restriction	Direct Acting	Warmer / Cooler	Bulb 3/8 x 7 in., capillary 36 in. (914 mm) long; Remote Bulb			65°F to 85°F (19°C to 30°C)	3.5°F (2°C)	In compartment of a unit ventilator	Integral Mounting Bracket, (2) 316297-00021 Bulb Hangers and 304528A Bag Assembly (mounting hardware).
LP916A1159/U	0.011 scfm (5.2 mL/s) with 0.005 in. restriction	Direct Acting	Warmer / Cooler	Bulb 3/8 x 9 in., capillary 36 in. (914 mm) long; Remote Bulb			60°F to 80°F (16°C to 27°C)	3.5°F (2°C)	In compartment of a unit ventilator	Integral mounting bracket
LP916A1175/U	0.022 scfm (10.4 mL/s) with 0.007 in. restriction	Direct Acting	40°F to 80°F	Bulb 3/8 x 7 in., capillary 36 in. (914 mm) long; Remote Bulb			40°F to 80°F (4°C to 26°C)	7°F (-13°C)	In compartment of a unit ventilator	Integral Mounting Bracket, (2) 316297-00021 Bulb Hangers and 304528A Bag Assembly (mounting hardware).
LP916B1017/U	0.022 scfm (10.4 mL/s) with 0.007 in. restriction	Direct Acting Heating, Reverse Acting Cooling	Warmer / Cooler	Bulb 1/2 x 5 7/8 in., capillary 36 in. (914 mm) long; Remote Bulb	Heat 18 psi, Cool 13 psi	Heat 124 kPa, Cool 90 kPa	65°F to 85°F (19°C to 30°C)	3.5°F (2°C)	In compartment of a unit ventilator	Integral Mounting Bracket and 304528A Bag Assembly (mounting hardware). Order bulb hangers (316297-00021) separately.
LP916B1058/U	0.022 scfm (10.4 mL/s) with 0.007 in. restriction	Direct Acting Heating, Reverse Acting Cooling	Warmer / Cooler	Bulb 1/2 x 5 7/8 in., capillary 36 in. (914 mm) long; Remote Bulb	Heat 18 psi, Cool 9 psi	Heat 124 kPa, Cool 62 kPa	65°F to 85°F (19°C to 30°C)	3.5°F (2°C)	In compartment of a unit ventilator	Integral Mounting Bracket and 304528A Bag Assembly (mounting hardware). Order bulb hangers (316297-00021) separately.
LP916B1074/U	0.011 scfm (5.2 mL/s) with 0.005 in. restriction	Direct Acting Heating, Reverse Acting Cooling	Warmer / Cooler	Bulb 3/8 x 7 in., capillary 36 in. (914 mm) long; Remote Bulb	Heat 18 psi, Cool 13 psi	Heat 124 kPa, Cool 90 kPa	65°F to 85°F (19°C to 30°C)	3.5°F (2°C)	Direct	Order Mounting Bracket, Knob, Bulb Hangers, and Scale Plate separately.
LP916B1082/U	0.011 scfm (5.2 mL/s) with 0.005 in. restriction	Direct Acting Heating, Reverse Acting Cooling	Warmer / Cooler	Bulb 3/8 x 7 in., capillary 36 in. (914 mm) long; Remote Bulb	Heat 18 psi, Cool 13 psi	Heat 124 kPa, Cool 90 kPa	65°F to 85°F (19°C to 30°C)	3.5°F (2°C)	In compartment of a unit ventilator	Integral Mounting Bracket, (2) 316297-00021 Bulb Hangers and 304528A Bag Assembly (mounting hardware).

Pneumatic Thermostats

Material Number	Airflow Usage	Product Action	Scale Markings	Sensor Element	Changeover Pressure (psi)	Changeover Pressure (kPa)	Setpoint Temperature Range	Throttling Range	Mounting	Includes
LP916B1090/U	0.011 scfm (5.2 mL/s) with 0.005 in. restriction	Direct Acting Heating, Reverse Acting Cooling	Warmer / Cooler	Bulb 3/8 x 9 in., capillary 36 in. (914 mm) long; Remote Bulb	Heat 18 psi, Cool 13 psi	Heat 124 kPa, Cool 90 kPa	65°F to 85°F (19°C to 30°C)	3.5°F (2°C)	In compartment of a unit ventilator	Integral Mounting Bracket, (2) 316297-00021 Bulb Hangers and 304528A Bag Assembly (mounting hardware).
LP916C1023/U	0.022 scfm (10.4 mL/s) with 0.007 in. restriction	Reverse Acting	60°F to 80°F	Bulb 3/8 x 9 in., capillary 36 in. (914 mm) long; Remote Bulb			60°F to 80°F (15°C to 26°C)	3.5°F (2°C)	In compartment of a unit ventilator	Integral Mounting Bracket, (2) 316297-00021 Bulb Hangers and 304528A Bag Assembly (mounting hardware).

Typical LP916A Mixed Air Application

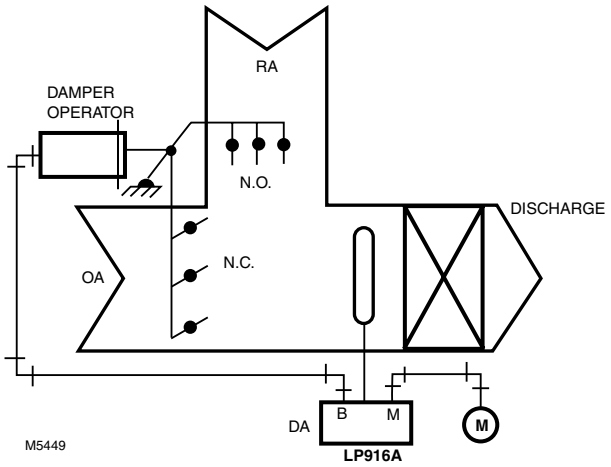

Typical LP916B Fan Coil Application, Heating/Cooling with Seasonal Changeover

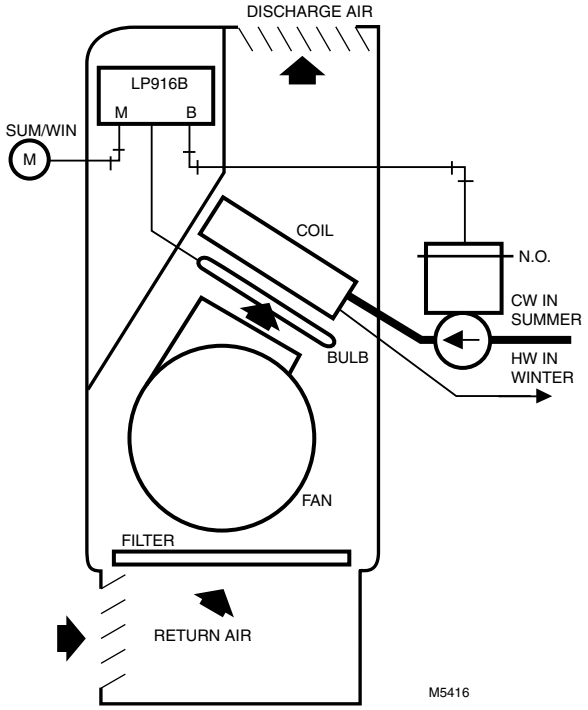

Typical LP916C Fan Coil Application, Cooling Only

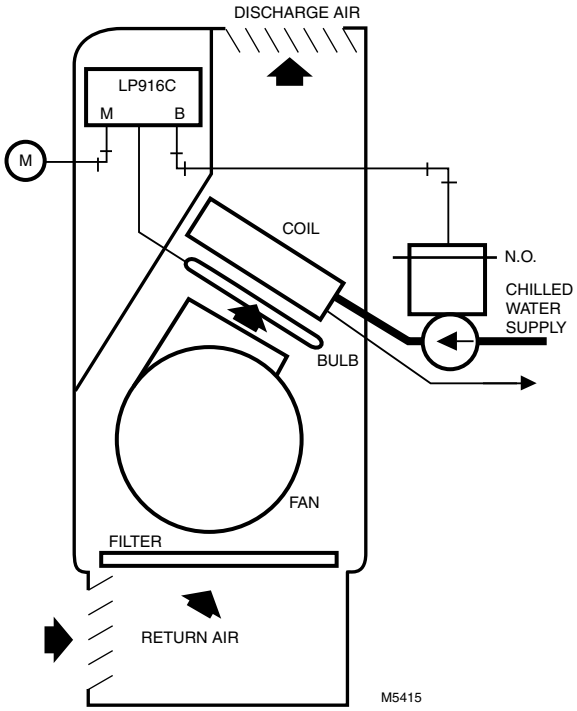

Typical LP916A Duct Mounted Heating Application

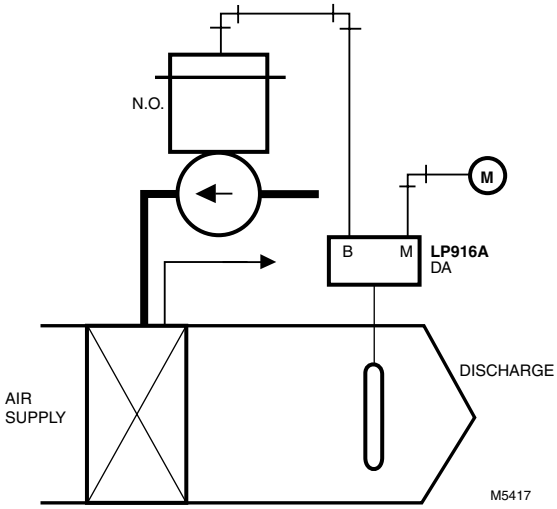

TP9600 Pneumatic Thermostat

TP9600 Pneumatic thermostat, for proportional control of pneumatic valves and actuators with one/two-pipe systems, is not only affordable and easy to install, but it controls temperature with Honeywell reliability. Available with two cover options.

- TP9600 delivers the Honeywell TP970s unparalleled sensing and control.
- Redesigned models fit your high-volume pneumatic applications.
- Backplate mounts quickly.
- Thermostat snaps onto backplate.
- Cover is mounted and locked into place with concealed setscrews.
- Attractive Euro-contoured design comes with choice of two cover options.
- Neutral taupe color blends with today's commercial interiors.
- Adapter kits are available to retrofit most pneumatic jobs.
- Branch line capacity Low for TP9630 and TP9633 Branch line capacity High for TP9600, TP9610, TP9603, TP9620.

Air Connections: Barb fittings 5/32 in. (4 mm)
Airflow Usage: 0.011 scfm (5.2 mL/s)
Sensor Element: Bimetal
Maximum Safe Operating Pressure (psi): 25 psi
Maximum Safe Operating Pressure (kPa): 170 kPa
Temperature Range: 50°F to 100°F (10°C to 38°C)
Shipping and Storage Temperature Range: 150°F maximum (66°C maximum)
Throttling Range: 2°F to 10°F (1°C to 5°C)
Dimensions: 3 1/4 in. high x 2 in. wide x 1 5/8 in. deep (83 mm high x 51 mm wide x 41 mm deep)
Mounting: Vertical Wall Mounting

Accessories:
AK3863/U – Thermostat Tool Kit,
CCT729A/U – Gauge adapter for calibration. Add 305965/U (0 to 30 psi gauge) for complete tool
CCT735A/U – Thermostat calibration tool includes Allen wrench for cover installation.
305965/U – 1-1/2 in. diameter, 1/8 NPT center stem back mount Pressure Indicating gauge (0 to 30 psi scale) with ± 4% accuracy

14002362-001/U – Duct Sampling Chamber
14002430-001/U – Thermostat Guard
14002913-001/U – 0.005 in. Blue Filter Restriction Assembly; Inlet: 1/4 in., Outlets: 1/4 in. and 5/32 in.; Order in Quantities of 10
14002913-004/U – External Restriction Assembly. 0.005 in. Restriction, Blue Inlet 1/4 in; Outlet 5/32 in. and 5/32 in.
14003192-001/U – Wallplate adapter kit. Adapts HP970 or TP970 series thermostats to HP900 and TP900 flush mounted and TP910 series flush or surface mounted installations
14004439-001/U – Setpoint Extension

Replacement Parts:
14001865-001/U – Filter Cartridge Assembly
14002053-001/U – Back Plate Assembly
14002573-001/U – Modernization Kit to convert all 1 & 2 pipe Honeywell & competitive pneumatic thermostats to TP970, TP971A, TP972, TP973, TP974, TP9600 family; HP970, HP971 and HP972

Material Number	Applications	Setpoint	Product Action	Number of Pipes	Changeover Pressure (psi)	Changeover Pressure (kPa)	Setpoint Temperature Range	Includes
TP9600A1007/U	Wall Thermostat	Single	Direct Acting	2			59°F to 90°F (15°C to 32°C)	Cover, Setpoint, and Thermometer are Visible
TP9600B1006/U	Wall Thermostat	Single	Reverse Acting	2			59°F to 90°F (15°C to 32°C)	Cover, Setpoint, and Thermometer are Visible
TP9603A1001/U	Wall Thermostat	Single	Direct Acting	2			59°F to 90°F (15°C to 32°C)	Blank Cover, Setpoint, and Thermometer are Not Visible
TP9610A1006/U	Wall Thermostat, Day/Night operation	Day/ Night	Direct Acting	2	Day 13 psi, Night 18 psi	Day 90 kPa, Night 124 kPa	Day: 59°F to 90°F, Night: 50°F to 75°F (Day: 15°C to 30°C, Night: 10°C to 27°C)	Cover, Setpoint, and Thermometer are Visible
TP9620A1005/U	Wall Thermostat, Heat/Cool Operation	Single	Direct Acting Heating, Reverse Acting Cooling	2	Heat 18 psi, Cool 13 psi	Heat 124 kPa, Cool 90 kPa	60°F to 90°F (16°C to 32°C)	Cover, Setpoint, and Thermometer are Visible
TP9630A1004/U	Wall Thermostat	Single	Direct Acting	1 or 2			60°F to 90°F (16°C to 32°C)	Cover, Setpoint, and Thermometer are Visible
TP9630B1003/U	Wall Thermostat	Single	Reverse Acting	1 or 2			60°F to 90°F (16°C to 32°C)	Cover, Setpoint, and Thermometer are Visible

TP970 Pneumatic Thermostat

Pneumatic thermostat gives comparable control of pneumatic valves and damper actuators in heating & air conditioning systems. Replacement kits available for Johnson, Powers, Robertshaw, Barber-Colman, and past Honeywell 2-pipe pneumatic thermostats.

- Honeywell's best pneumatic thermostat-TP970 series.
- Shock-resistant, suspension-mounted thermostats provide dependable performance and responsiveness year in and year out.
- Pilot operated for high capacity.
- Direct Acting (DA) and Reverse Acting (RA) models are available.
- Wide throttling range models for Zero Energy Band (ZEB) operation are available.
- Adapter plate in Convertastat™ and Modernization kits covers existing thermostat wall mark.
- Backplate has molded air connections-no separate fittings needed.
- Universal locking cover with satin chrome finish and horizontal, vertical, or blank window options.
- Typical Wide Throttling Range Application.

Airflow Usage: 0.011 scfm (5.2 mL/s)
Setpoint: Single
Number of Pipes: 2
Sensor Element: Bimetal
Maximum Safe Operating Pressure (psi): 25 psi
Maximum Safe Operating Pressure (kPa): 170 kPa
Shipping and Storage Temperature Range: 150°F maximum (66°C maximum)
Dimensions: 3 1/4 in. high x 2 in. wide x 1 5/8 in. deep (83 mm high x 51 mm wide x 41 mm deep)
Mounting: Wall mount

Accessories:
AK3863/U – Thermostat Tool Kit,
CCT729A/U – Gauge adapter for calibration. Add 305965/U (0 to 30 psi gauge) for complete tool
CCT735A/U – Thermostat calibration tool includes Allen wrench for cover installation.
305965/U – 1-1/2 in. diameter, 1/8 NPT center stem back mount Pressure Indicating gauge (0 to 30 psi scale) with ± 4% accuracy
14002362-001/U – Duct Sampling Chamber
14002430-001/U – Thermostat Guard
14002913-001/U – 0.005 in. Blue Filter Restriction Assembly; Inlet: 1/4 in., Outlets: 1/4 in. and 5/32 in.; Order in Quantities of 10
14002913-004/U – External Restriction Assembly. 0.005 in. Restriction, Blue Inlet 1/4 in.; Outlet 5/32 in. and 5/32 in.
14003192-001/U – Wallplate adapter kit. Adapts HP970 or TP970 series thermostats to HP900 and TP900 flush mounted and TP910 series flush or surface mounted installations
14004439-001/U – Setpoint Extension
14004447-001/U – Setpoint cam assembly for TP970A, TP970C, TP972A and TP973A Thermostats
14004447-002/U – Setpoint Cam Assembly for TP970B, TP970D, TP972A, and TP973B
14004447-005/U – Setpoint Cam Assembly for TP970B, and TP972A

Replacement Parts:
14001865-001/U – Filter Cartridge Assembly
14002053-001/U – Back Plate Assembly
14002573-001/U – Modernization Kit to convert all 1 & 2 pipe Honeywell & competitive pneumatic thermostats to TP970, TP971A, TP972, TP973, TP974, TP9600 family; HP970, HP971 and HP972
14004459-001/U – Repair kit consisting of a thermometer assembly, a thermometer post and a 60 to 90°F aluminum scaleplate

Material Number	Applications	Product Action	Temperature Range	Setpoint Temperature Range	Throttling Range	Includes	Comments
TP970A2004/U	Heating	Direct Acting	100°F maximum	59°F to 90°F	2°F to 10°F (factory set 4°F) (-16°C to -12°C (factory set -15°C))	Order Cover Separately	
TP970A2012/U	Heating	Direct Acting	100°F maximum	40°F to 70°F	2°F to 10°F (factory set 4°F) (-16°C to -12°C (factory set -15°C))	Order Cover Separately	
TP970A2020/U	Heating	Direct Acting	(38°C maximum)	(15°C to 30°C)	33°F to 41°F (factory set 35°C) (1°C to 5°C (factory set 2°C))	Order Cover Separately	
TP970A2038/U	Heating	Direct Acting	100°F maximum	59°F to 90°F	2°F to 10°F (factory set 4°F) (-16°C to -12°C (factory set -15°C))	Thermostat, large wall plate and satin chrome cover.	Modernization kit used to convert older Honeywell Thermostats.
TP970A2145/U	Heating	Direct Acting	100°F maximum	59°F to 90°F	2°F to 10°F (factory set 4°F) (-16°C to -12°C (factory set -15°C))	Thermostat, small wall plate and satin chrome cover.	Convertastat Kit
TP970A2234/U	Heating	Direct Acting	(38°C maximum)	(15°C to 30°C)	33°F to 41°F (factory set 35°C) (1°C to 5°C (factory set 2°C))	Thermostat, small wall plate and satin chrome cover.	Convertastat Kit
TP970A2242/U	Heating	Direct Acting	100°F maximum	59°F to 90°F	2°F to 10°F (factory set 4°F) (-16°C to -12°C (factory set -15°C))	Thermostat, small wall plate and beige cover.	Convertastat Kit
TP970A2259/U	Heating	Direct Acting	100°F maximum	59°F to 90°F	2°F to 10°F (factory set 4°F) (-16°C to -12°C (factory set -15°C))	Thermostat and satin chrome cover.	Tradeline Kit
TP970B2002/U	Cooling only systems	Reverse Acting	100°F maximum	59°F to 90°F	2°F to 10°F (factory set 4°F) (-16°C to -12°C (factory set -15°C))	Order Cover Separately	

Material Number	Applications	Product Action	Temperature Range	Setpoint Temperature Range	Throttling Range	Includes	Comments
TP970B2010/U	Cooling only systems	Reverse Acting	(38°C maximum)	(15°C to 30°C)	33°F to 41°F (factory set 35°C) (1°C to 5°C (factory set 2°C))	Order Cover Separately	
TP970B2077/U	Cooling only systems	Reverse Acting	100°F maximum	59°F to 90°F	2°F to 10°F (factory set 4°F) (-16°C to -12°C (factory set -15°C))	Thermostat, small wall plate and satin chrome cover.	Convertastat Kit
TP970B2150/U	Cooling only systems	Reverse Acting	(38°C maximum)	(15°C to 30°C)	33°F to 41°F (factory set 35°C) (1°C to 5°C (factory set 2°C))	Thermostat, small wall plate and satin chrome cover.	Convertastat Kit
TP970B2166/U	Cooling only systems	Reverse Acting	100°F maximum	59°F to 90°F	2°F to 10°F (factory set 4°F) (1°C to 5°C (factory set 2°C))	Thermostat, small wall plate and beige cover.	Convertastat Kit
TP970B2182/U	Cooling only systems	Reverse Acting	100°F maximum	59°F to 90°F	2°F to 10°F (factory set 4°F) (-16°C to -12°C (factory set -15°C))	Thermostat and satin chrome cover.	Tradeline Kit
TP970C2000/U	Heat; Cooling only systems	Direct Acting	100°F maximum	59°F to 90°F	5°F to 25°F (-15°C to -3°C)	Order Cover Separately	Wide Throttling Range 5-25°F

Typical Standard Throttling Range Piping

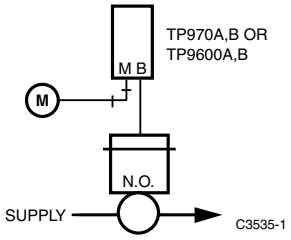

Typical Wide Throttling Range Piping

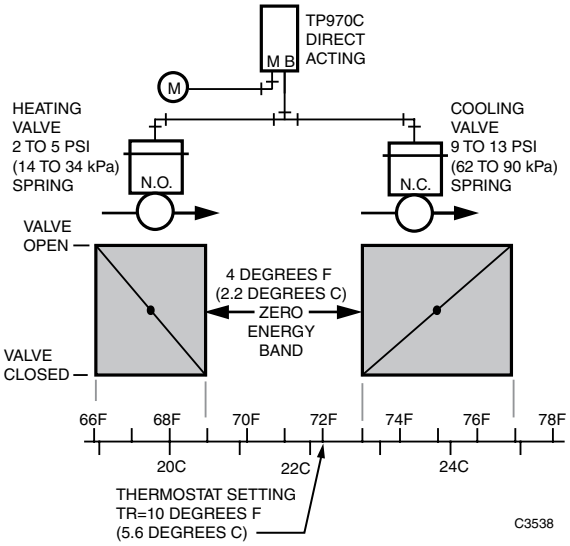

TP971 Pneumatic Day/Night Thermostat

TP971 Typical Piping

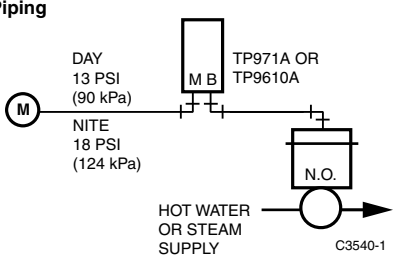

Pneumatic thermostat with night setback used for proportional control of pneumatic valves and damper actuators. Replacement kits are available for Johnson, Powers, Robertshaw, Barber-Colman, and older Honeywell two-pipe pneumatic thermostats.

- Durable TP970 series thermostat Pilot operated for high capacity.
- Direct Acting (DA) and Reverse Acting (RA) models are available.
- Three-pipe thermostats are available for unit ventilator applications where the outdoor damper must operate when the thermostat is manually set to day operation.
- Adapter plate in thermostat kits covers existing thermostat watermark.
- Backplate has molded air connections-no separate fittings needed.
- Universal Locking cover with satin chrome finish and horizontal, vertical, or blank window options-other covers available.

Applications: Wall Thermostat, Day/Night operation
Airflow Usage: 0.011 scfm (5.2 mL/s)
Setpoint: Day/Night
Sensor Element: Bimetal
Maximum Safe Operating Pressure (psi): 25 psi
Maximum Safe Operating Pressure (kPa): 170 kPa
Shipping and Storage Temperature Range: 150°F maximum (66°C maximum)
Throttling Range: 2°F to 10°F (1°C to 5°C)
Dimensions: 3 1/4 in. high x 2 in. wide x 1 5/8 in. deep (83 mm high x 51 mm wide x 41 mm deep)
Mounting: Wall mount

Accessories:
AK3863/U – Thermostat Tool Kit,
CCT729A/U – Gauge adapter for calibration. Add 305965/U (0 to 30 psi gauge) for complete tool
CCT735A/U – Thermostat calibration tool includes Allen wrench for cover installation.
305965/U – 1-1/2 in. diameter, 1/8 NPT center stem back mount Pressure Indicating gauge (0 to 30 psi scale) with ± 4% accuracy
14002362-001/U – Duct Sampling Chamber
14002430-001/U – Thermostat Guard
14003192-001/U – Wallplate adapter kit. Adapts HP970 or TP970 series thermostats to HP900 and TP900 flush mounted and TP910 series flush or surface mounted installations
14004439-001/U – Setpoint Extension
14004447-003/U – Setpoint cam assembly for TP971A, TP971C, TP971D and TP972A Thermostats

Replacement Parts:
14001865-001/U – Filter Cartridge Assembly

Material Number	Product Action	Number of Pipes	Changeover Pressure (psi)	Changeover Pressure (kPa)	Temperature Range	Setpoint Temperature Range	Includes	Comments
TP971A2003/U	Direct Acting Heating, two temp.	2	Day 13 psi, Night 18 psi	Day 90 kPa, Night 124 kPa	100°F maximum	Day: 59°F to 90°F, Night: 50°F to 80°F	Order Cover Separately	
TP971A2011/U	Direct Acting Heating, two temp.	2	Day 13 psi, Night 18 psi	Day 90 kPa, Night 124 kPa	(38°C maximum)	(Day: 15°C to 30°C, Night: 10°C to 27°C)	Order Cover Separately	
TP971A2029/U	Direct Acting Heating, two temp.	2	Day 16 psi, Night 21 psi	Day 110 kPa, Night 144 kPa	100°F maximum	Day: 59°F to 90°F, Night: 50°F to 80°F	Order Cover Separately	
TP971A2052/U	Direct Acting Heating, two temp.	2	Day 16 psi, Night 21 psi	Day 110 kPa, 144 kPa	(38°C maximum)	(Day: 15°C to 30°C, Night: 10°C to 27°C)	Order Cover Separately	
TP971A2086/U	Direct Acting Heating, two temp.	2	Day 20 psi, Night 25 psi	Day 137 kPa, Night 172 kPa	100°F maximum	Day: 59°F to 90°F, Night: 50°F to 80°F	Order Cover Separately	
TP971A2102/U	Direct Acting Heating, two temp.	2	Day 13 psi, Night 18 psi or 16-20 psi	Day 90 kPa, Night 124 kPa	100°F maximum	Day: 59°F to 90°F, Night: 50°F to 80°F	Thermostat, small wall plate and satin chrome cover.	Convertastat Kit
TP971B2001/U	Reverse Acting Heating, two temp.	2	Day 13 psi, Night 18 psi	Day 90 kPa, Night 124 kPa	100°F maximum	Day: 59°F to 90°F, Night: 50°F to 80°F	Order Cover Separately	
TP971B2019/U	Reverse Acting Heating, two temp.	2	Day 16 psi, Night 21 psi	Day 110 kPa, Night 144 kPa	100°F maximum	Day: 59°F to 90°F, Night: 50°F to 80°F	Order Cover Separately	
TP971B2043/U	Reverse Acting Heating, two temp.	2	Day 20 psi, Night 25 psi	Day 137 kPa, Night 172 kPa	100°F maximum	Day: 59°F to 90°F, Night: 50°F to 80°F	Order Cover Separately	
TP971C2009/U	Direct Acting Heating, two temp.	3	Day 13 psi, Night 18 psi	Day 90 kPa, Night 124 kPa	100°F maximum	Day: 59°F to 90°F, Night: 50°F to 80°F	Order Cover Separately	Has secondary branch line
TP971C2017/U	Direct Acting Heating, two temp.	3	Day 13 psi, Night 18 psi	Day 90 kPa, Night 124 kPa	(38°C maximum)	(Day: 15°C to 30°C, Night: 10°C to 27°C)	Order Cover Separately	Has secondary branch line
TP971C2025/U	Direct Acting Heating, two temp.	3	Day 16 psi, Night 21 psi	Day 110 kPa, Night 144 kPa	100°F maximum	Day: 59°F to 90°F, Night: 50°F to 80°F	Order Cover Separately	Has secondary branch line

TP972 Pneumatic Heating/Cooling Thermostat

TP972 Typical Piping

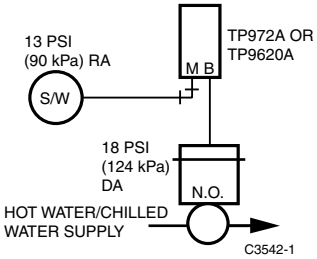

Two-pipe, one- or two-temperature, pneumatic thermostat gives proportional control of pneumatic valves & damper actuators. Replacement kits available for Johnson, Powers, Robertshaw, Barber-Colman, and older Honeywell two-pipe pneumatic thermostats.

- Durable TP970 Series Thermostat. Pilot operated for high capacity.
- Two-temperature energy conservation model available.
- Adapter plate in Convertastat™ kits covers existing thermostat wall mark.
- Backplate has molded air connections-no separate fittings needed.
- Universal locking cover with satin chrome finish and horizontal, vertical, or blank window options with Tradeline model-other covers available.

Applications: Wall Thermostat, Heat/Cool Operation
Airflow Usage: 0.011 scfm (5.2 mL/s)
Product Action: Direct Acting Heating, Reverse Acting Cooling
Number of Pipes: 2
Sensor Element: Bimetal
Maximum Safe Operating Pressure (psi): 25 psi
Maximum Safe Operating Pressure (kPa): 170 kPa
Shipping and Storage Temperature Range: 150°F maximum (66°C maximum)
Throttling Range: 2°F to 10°F (1°C to 5°C)
Dimensions: 3 1/4 in. high x 2 in. wide x 1 5/8 in. deep (83 mm high x 51 mm wide x 41 mm deep)
Mounting: Wall mount

Accessories:
AK3863/U – Thermostat Tool Kit,
CCT729A/U – Gauge adapter for calibration. Add 305965/U (0 to 30 psi gauge) for complete tool
CCT735A/U – Thermostat calibration tool includes Allen wrench for cover installation.
305965/U – 1-1/2 in. diameter, 1/8 NPT center stem back mount Pressure Indicating gauge (0 to 30 psi scale) with ± 4% accuracy
14002362-001/U – Duct Sampling Chamber
14002430-001/U – Thermostat Guard
14003192-001/U – Wallplate adapter kit. Adapts HP970 or TP970 series thermostats to HP900 and TP900 flush mounted and TP910 series flush or surface mounted installations
14004439-001/U – Setpoint Extension
14004447-001/U – Setpoint Cam Assembly for TP970A, TP970C, TP972A, and TP973A
14004447-002/U – Setpoint Cam Assembly for TP970B, TP970D, TP972A, and TP973B
14004447-003/U – Setpoint cam assembly for TP971A, TP971C, TP971D and TP972A Thermostats
14004447-005/U – Setpoint Cam Assembly for TP970B, and TP972A

Replacement Parts:
14001865-001/U – Filter Cartridge Assembly
14002573-001/U – Modernization Kit to convert all 1 & 2 pipe Honeywell & competitive pneumatic thermostats to TP970, TP971A, TP972, TP973, TP974, TP9600 family; HP970, HP971 and HP972

Material Number	Setpoint	Changeover Pressure (psi)	Changeover Pressure (kPa)	Temperature Range	Setpoint Temperature Range	Includes	Comments
TP972A2002/U	Single	Heat 18 psi, Cool 13 psi	Heat 124 kPa, Cool 90 kPa	100°F maximum	59°F to 90°F	Order Cover Separately	
TP972A2010/U	Single	Heat 18 psi, Cool 13 psi	Heat 124 kPa, Cool 90 kPa	(38°C maximum)	(15°C to 30°C)	Order Cover Separately	
TP972A2036/U	Dual	Heat 18 psi, Cool 13 psi	Heat 124 kPa, Cool 90 kPa	100°F maximum	Heating 50°F to 75°F, Cooling 60°F to 90°F	Energy Conservation Model, Order Cover Separately	Two concealed setpoint knobs
TP972A2143/U	Single	Heat 14 psi, Cool 19 psi	Heat 96 kPa, Cool 131 kPa	100°F maximum	59°F to 90°F	Order Cover Separately	
TP972A2192/U	Single	Heat 18 psi, Cool 13 psi	Heat 124 kPa, Cool 90 kPa	100°F maximum	59°F to 90°F	Thermostat, small wall plate and satin chrome cover	Convertastat Kit

TP973 Pneumatic Thermostat

TP973 Typical Piping (One-pipe)

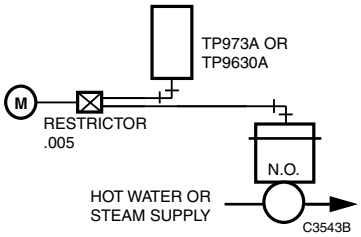

Single temperature, low capacity, pneumatic thermostat provides control of pneumatic valves & damper actuators in HVAC systems. Replacement kits are available for Johnson, Powers, Robertshaw, Barber-Colman, and older Honeywell pneumatic thermostats.

- Durable TP970 Series Thermostat. Direct Acting (DA) and Reverse Acting (RA) models are available.
- Backplate has molded air connections-no separate fittings needed.
- Universal locking cover with satin chrome finish and horizontal, vertical, or blank window options available.
- Other Covers Available.
- Low capacity thermostat.
- Built in restrictor for two-pipe applications.

Applications: Wall Thermostat, Single Temperature
Airflow Usage: 0.011 scfm (5.2 mL/s)
Setpoint: Single
Sensor Element: Bimetal
Maximum Safe Operating Pressure (psi): 25 psi
Maximum Safe Operating Pressure (kPa): 170 kPa
Shipping and Storage Temperature Range: 150°F maximum (66°C maximum)
Throttling Range: 2°F to 10°F (1°C to 5°C)
Dimensions: 3 1/4 in. high x 2 in. wide x 1 5/8 in. deep (83 mm high x 51 mm wide x 41 mm deep)
Mounting: Wall mount

Accessories:
AK3863/U – Thermostat Tool Kit,
CCT729A/U – Gauge adapter for calibration. Add 305965/U (0 to 30 psi gauge) for complete tool
CCT735A/U – Thermostat calibration tool includes Allen wrench for cover installation.
305965/U – 1-1/2 in. diameter, 1/8 NPT center stem back mount Pressure Indicating gauge (0 to 30 psi scale) with ± 4% accuracy
14002362-001/U – Duct Sampling Chamber
14002430-001/U – Thermostat Guard
14002913-004/U – External Restriction Assembly. 0.005 in. Restriction, Blue Inlet 1/4 in.; Outlet 5/32 in. and 5/32 in.
14003192-001/U – Wallplate adapter kit. Adapts HP970 or TP970 series thermostats to HP900 and TP900 flush mounted and TP910 series flush or surface mounted installations
14004439-001/U – Setpoint Extension
14004447-001/U – Setpoint Cam Assembly for TP970A, TP970C, TP972A, and TP973A
14004447-002/U – Setpoint Cam Assembly for TP970B, TP970D, TP972A, and TP973B

Replacement Parts:
14001865-001/U – Filter Cartridge Assembly
14002573-001/U – Modernization Kit to convert all 1 & 2 pipe Honeywell & competitive pneumatic thermostats to TP970, TP971A, TP972, TP973, TP974, TP9600 family; HP970, HP971 and HP972

Material Number	Product Action	Number of Pipes	Temperature Range	Setpoint Temperature Range	Includes	Comments
TP973A2076/U	Direct Acting	1 or 2	100°F	59°F to 90°F	Order Cover Separately	For one-pipe order an external 0.005 in. restriction
TP973A2084/U	Direct Acting	1 or 2	(38°C)	(15°C to 30°C)	Order Cover Separately	For one-pipe order an external 0.005 in. restriction
TP973A2209/U	Direct Acting	1 or 2	100°F	59°F to 90°F	Thermostat and Satin Chrome Cover	Tradeline Kit. For one-pipe application-order an external .005 in. restriction
TP973B2066/U	Reverse Acting	1 or 2	100°F	59°F to 90°F	Order Cover Separately	For one-pipe order an external 0.005 in. restriction
TP973B2074/U	Reverse Acting	1 or 2	(38°C)	(15°C to 30°C)	Order Cover Separately	For one-pipe order an external 0.005 in. restriction
TP973B2171/U	Reverse Acting	1 or 2	100°F	59°F to 90°F	Thermostat and Satin Chrome Cover	Tradeline Kit. For one-pipe application-order an external .005 in. restriction

TP975 Pneumatic Diffuser Thermostat

One-pipe, single temperature, low-capacity pneumatic thermostat used to provide proportional control of pneumatic valves and mixing boxes in heating and air conditioning systems. It mounts in a slot or light troffer diffuser or a return air grill.

- Two-way setpoint indicator for vertical or horizontal mounting.
- Detents in 1°F (0.5°C) increments for blind operation.

Applications: Single temperature, low capacity, pneumatic thermostat
Airflow Usage: 0.011 scfm (5.2 mL/s)
Number of Pipes: 1
Sensor Element: Bimetal
Maximum Safe Operating Pressure (psi): 30 psi
Maximum Safe Operating Pressure (kPa): 207 kPa
Temperature Range: 110°F maximum (43°C maximum)
Shipping and Storage Temperature Range: 150°F maximum (66°C maximum)
Dimensions: 1 in. high x 2 1/2 in. wide x 1 1/8 in. deep (25 mm high x 63 mm wide x 27 mm deep)
Mounting: Wall mount

Accessories:
14002913-001/U – 0.005 in. Blue Filter Restriction Assembly; Inlet: 1/4 in., Outlets: 1/4 in. and 5/32 in.; Order in Quantities of 10
14002913-004/U – External Restriction Assembly. 0.005 in. Restriction, Blue Inlet 1/4 in.; Outlet 5/32 in. and 5/32 in.

TP975 Typical Piping

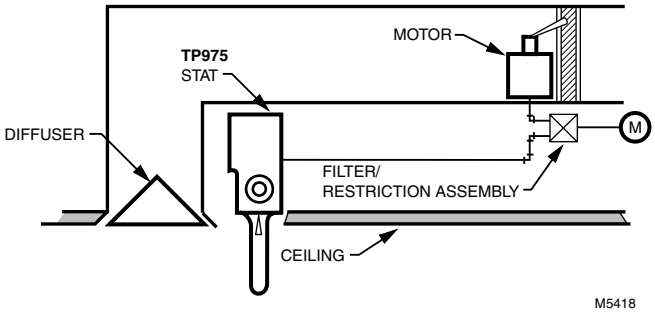

Material Number	Product Action	Setpoint	Setpoint Temperature Range	Throttling Range	Comments
TP975A1009/U	Direct Acting	Single	67°F to 83°F	2°F to 10°F (1°C to 5°C)	Requires external 0.005 in. restrictor

TP9600 Series Standard Covers

Material Number	Description	Used With	
14004910-001/U	Fahrenheit scale (60 to 90°F) Taupe Thermostat Cover Kit with thermometer and setpoint display visible and Honeywell logo for vertical mounting.	TP9600	
14004910-004/U	Taupe Thermostat Cover with setpoint and thermometer concealed with Honeywell logo, for vertical mounting	TP9600	

TP970 Series Standard Covers

Material Number	Description	Comments	Used With	
14004406-910/U	Thermostat Cover Kit - Satin Chrome includes window inserts for 60 to 90°F setpoint display for vertical and horizontal mounting, or 60 to 90°F thermometer display and setpoint display for vertical and horizontal mounting.		TP970; TP971; TP972; TP973	
14004407-910/U	Thermostat Cover Kit - Beige includes window inserts for 60 to 90°F setpoint display for vertical and horizontal mounting, or 60 to 90°F thermometer display and setpoint display for vertical and horizontal mounting.	See Specification Data sheet, Form No. 77-1003 for details	TP970; TP971; TP972; TP973	
14004787-910/U	Thermostat Cover Kit; Bright Chrome Finish		TP970, TP971, TP972, TP973	
14004878-910/U	Premier White Thermostat Cover Kit includes window inserts for 60 to 90°F setpoint display for vertical and horizontal mounting, or 60 to 90°F thermometer display and setpoint display for vertical and horizontal mounting.		TP970, TP971, TP972, TP973	

Pneumatic Thermostat Replacement Parts

Material Number	Description	Used With	
14000742-002/U	Two-pipe straight red connector	TP970; TP971; TP972; TP973; TP9600 Family; HP970 Family	
14001957-001/U	Plug, BLP Tap	TP970	
14002053-001/U	Back Plate Assembly	TP970; TP971; TP972; TP973; TP9600 Family; HP970 Family	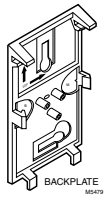
14002573-001/U	Modernization Kit to convert all 1 & 2 pipe Honeywell & competitive pneumatic stats to TP970, TP971A, TP972, TP973, TP974, TP9600 family; HP970, HP971 and HP972	TP9600; TP970; TP972; TP973; HP970; HP971; TP971A; HP972; TP974	
14003192-001/U	Wall plate adapter kit. Adapts HP970 or TP970 series stats to HP900 and TP900 flush mounted and TP910 series flush or surface mounted installations	TP970; TP971; TP972; TP973; TP9600 Family; HP970 Family	
14004459-003/U	Repair Kit consisting of a thermometer assembly, a thermometer post and a 15 to 30°C aluminum Scale Plate	TP970	
14004610-001/U	Zinc plate metal stud Adapter	TP970	

Pneumatic Thermostat Accessories

Material Number	Description	Used With	
14001491-002/U	Two-Pipe Airhead, plastic tubing assembly for deep wall box	TP970; TP971; TP972; TP973; TP9600 Family; HP970 Family	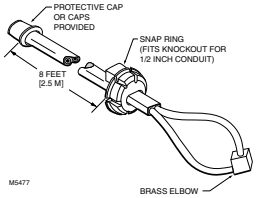
14001494-002/U	2 Pipe Airhead Assembly, copper tubing for deep wall box		
14001496-001/U	Mounting Plate for TP970 to 2 in. x 4 in. Electrical Box	TP970	
14001527-001/U	Three pipe straight white connector	TP970; TP971; TP972; TP973; TP9600 Family; HP970 Family	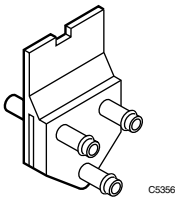
14001614-001/U	Shallow wall plate assembly	TP970; TP971; TP972; TP973; TP9600 Family; HP970 Family	
14001615-002/U	Two-pipe copper tube assembly for shallow wall	TP971; TP972; TP973; HP970 Family; TP9600 Family; TP970	
14001616-002/U	Two-pipe plastic tube assembly for shallow wall box		
14001918-001/U	Branchline Pressure plug	TP971; TP972; TP973; HP970 Family; TP9600 Family; TP970	

Pneumatic Thermostats

Material Number	Description	Used With	
14002136-004/U	Black Trim plate	TP970; TP971; TP972; TP973; TP9600 Family; HP970 Family	
14002136-005/U	Beige Trim plate	TP970; TP971; TP972; TP973; TP9600 Family; HP970 Family	
14002136-006	Premier White Trim Plate	TP971; TP972; TP973; HP970 Family; TP9600 Family; TP970	
14002362-001/U	Duct Sampling Chamber	TP970; TP971; TP972; TP973; TP974; TP9600 Family; HP970 Family	
14002430-001/U	Thermostat Guard	TP970; TP971; TP972; TP973; TP9600 Family; HP970 Family	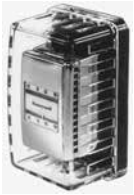
14002573-002/U	Modernization Kit to convert 3 pipe Honeywell TP911C & competitive three pipe pneumatic	TP971C	
14002636-001/U	Base for 14002362-001 Sampling Chamber	14002362-001	
14002913-001/U	.005 in. Blue Filter Restriction Assembly; Inlet: 1/4 in., Outlets: 1/4 in. and 5/32 in.; Order in Quantities of 10		
14002913-002/U	.007 In. Red In-line Filtered Restriction Assembly; Inlet: 1/4 in., Outlets: 1/4 in.: Order in quantities of 10		
14003113-002/U	Repair kit containing 0.007 in. restrictor plate, filters, and gaskets	LP916	
14003203-001/U	Bag assembly		
14004068-001/U	Mounting Hardware		
14004401-002/U	Convertastat Wall plate, black		
14004401-004/U	Adaptor plate for conversant, beige		
14004437-001/U	INSERT COVER, Day, Satin Chrome		
14004438-001/U	Satin Chrome Cover Insert with Setpoint Slot Setpoint Display	Pneumatic Thermostats	
14004438-002/U	Beige Cover Insert with Setpoint Slot	Pneumatic Thermostats	

Material Number	Description	Used With	
14004439-001/U	SETPOINT EXTENSION		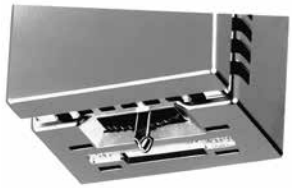
14004447-001/U	Setpoint Cam Assembly for TP970A1004, A1012, A1020, A1038, A1046, A1053, A1095, A2004, A2012, A2020, A2038, A2053, A2095; TP970C; TP972A1143, A2143; TP973A1001, A1019, A1127	TP970A; TP970C; TP972A2143; TP979A	
14004447-002/U	Setpoint Cam Assembly for TP970B1002, B1010, B1028, B1036, B2002, B2010, B2028, B2036; TP970D; TP972A1002, A1010, A1028, A1044, A2002, A2010, A2028, A2044; TP973B1009, B1017, B1025, B1108	TP970B; TP970D; TP972A2002; TP972A2010; TP973B2108; TP979B	
14004447-003/U	Setpoint Cam Assembly for TP971A, C, D; TP972A1168, A2168, A2176	TP971A; TP971C; TP971D	
14004447-005/U	Setpoint Cam Assembly for TP970B1044; TP972A1051, A1101	TP972A; TP970B	
14004458-001/U	Stand-Off Ring for surface or flush mounting	TP970; TP971; TP972; TP973; TP9600 Family; HP970 Family	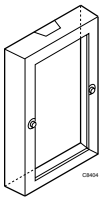
14004459-001/U	Scaleplate Bag Assembly, 60 to 90°F	TP970 Family	
14004505-001/U	Twin elbow connector	TP970; TP971; TP972; TP973; TP9600 Family; HP970 Family	
14004558-001/U	Six inch main branch tube-spring assembly	TP970; TP971; TP972; TP973; TP9600 Family; HP970 Family	
311699/U	6 inch long anti-kink spring used with 5/32 inch OD plastic tubing	LP916	
316016A/U	General purpose mounting assembly, includes 3 3/4 in. mounting bracket, scale plate, knob, bulb hangers, screws, and nuts	LP916	
316016C/U	Knob and scale plate assembly with screws	LP916	
316016M/U	Knob, large scale plate and hanger assembly with screws	LP916	
AK3863/U	Honeywell Thermostat Tool Kit, TP970/TP900	HP970, HP972, TP970	

RP7517 Electronic-Pneumatic Transducer

Electronic-Pneumatic Transducers are used in electronic-pneumatic control systems to convert a proportional electric output signal from a controller into a direct-acting, proportional pneumatic signal.

- Screw mounting or snap rail (models with cover).
- Factory calibrated.
- Dual barb fittings.
- High accuracy.

Applications: Electric to pneumatic Transducer
Airflow Usage: 0.025 scfm (117mL/s)
Capacity: 0.45 scfm (211 mL/s)
Air Connections: Dual barb-fittings for 1/4 in. or 5/32 in. O.D. plastic tubing
Nominal Low End (psi): 0.5 psi at 0 Vdc
Nominal Low End (kPa): 3.5 kPa at 0 Vdc

Operating Humidity Range (% RH): 5 to 95% RH
Temperature Range: 131°F, maximum (55°C, maximum)
Pressure Range (psi): 0 to 18 psi; Output – 3 to 15 psi
Pressure Range (kPa): 0 to 125 kPa; Output – 21 to 103 kPa
Maximum Safe Operating Pressure (psi): 30 psi, maximum
Maximum Safe Operating Pressure (kPa): 205 kPa, maximum
Current: 16 mA

RP7517 Typical Piping/Wiring

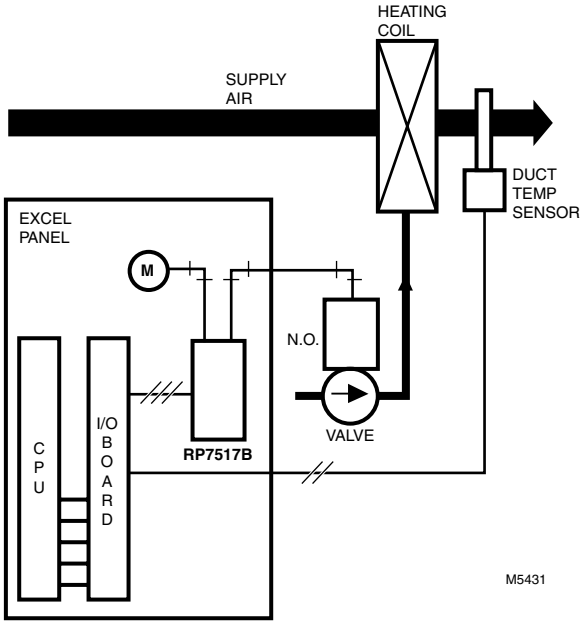

Material Number	Electrical Connections	Voltage	Nominal High End (psi)	Nominal High End (kPa)	Dimensions	Input Signal	Includes
RP7517A1009	30 in. (762 mm) lead wire	Powered by Control signal	16 psi with 18 psi main pressure at 12 Vdc	110 kPa with 125 kPa main pressure at 12 Vdc	2 7/16 in. wide x 3 5/8 in. high x 2 in. deep (62 mm wide x 92 mm high x 52 mm deep)	2 to 10 Vdc	With cover, without internal power supply (2-wire)
RP7517A1017	Screw terminals for 14 to 22 gage wire	Powered by Control signal	16 psi with 18 psi main pressure at 12 Vdc or 16 psi at 11 Vdc (min.)	116 kPa with 125 kPa main pressure at 12 Vdc or 110 kPa at 11 Vdc (min.)	2 7/16 in. wide x 3 3/8 in. high x 1 7/8 in. deep (62 mm wide x 86 mm high x 48 mm deep)	2 to 10 Vdc	Without cover, without internal power supply for panel mounting (2 wire)
RP7517B1016	30 in. (762 mm) lead wire	24 Vac external transformer	16 psi with 18 psi main pressure at 12 Vdc or 16 psi at 11 Vdc (min.)	116 kPa with 125 kPa main pressure at 12 Vdc or 110 kPa at 11 Vdc (min.)	2 7/16 in. wide x 3 5/8 in. high x 2 in. deep (62 mm wide x 92 mm high x 52 mm deep)	2 to 10 Vdc at 0.1 mA max	With cover, external transformer required, 24 Vac, 50/60 Hz, (3 wire)
RP7517B1024	Screw terminals for 14 to 22 gage wire	24 Vac external transformer	16 psi with 18 psi main pressure at 12 Vdc or 16 psi at 11 Vdc (min.)	116 kPa with 125 kPa main pressure at 12 Vdc or 110 kPa at 11 Vdc (min.)	2 7/16 in. wide x 3 3/8 in. high x 1 7/8 in. deep (62 mm wide x 86 mm high x 48 mm deep)	2 to 10 Vdc at 0.1 mA max	Without cover, external transformer required, 24 Vac, 50/60 Hz, (3 wire)

CP980 Velocitrol Velocity Sensor/Controller

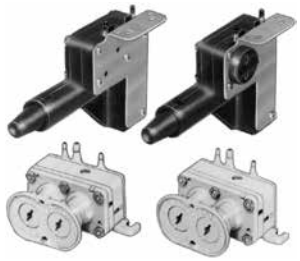

An ultra-sensitive air velocity sensor and pneumatic controller, control pneumatic damper actuators in heating and air conditioning systems to provide constant air velocity in the duct regardless of the static pressure.

- State-of-the-art design provides reliable operation.
- Not position sensitive.
- Direct Acting (DA) and Reverse Acting (RA) models are available.
- Insensitive to static pressure changes.
- Accurate control throughout entire velocity range.
- Graduated scales for minimum and maximum velocity adjustments.
- Velocity reset by thermostat demand.
- Adaptable to many terminal unit control strategies.

Applications: Velocitrol Air Velocity Sensor
Airflow Usage: 0.029 scfm (13.7 mL/s), includes supply for bleed type thermostats for type B, does not include thermostat air for type C controller
Maximum Safe Operating Pressure (psi): 30 psi
Maximum Safe Operating Pressure (kPa): 207 kPa
Mainline Pressure Range (psi): 18 psi Minimum, 20 psi Nominal
Mainline Pressure Range (kPa): 124 kPa Minimum, 138 kPa Nominal
Temperature Range: 40°F to 130°F (5°C to 55°C)

Dimensions: Controller: 1 3/4 in. high x 3 1/4 in. wide x 2 3/8 in. deep / Sensor: 3 3/16 in. high x 1 3/4 in. wide x 4 3/16 in. long with orifice and 3 3/8 in. long without orifice (Controller: 44 mm high x 83 mm wide x 60 mm deep / Sensor: 81 mm high x 45 mm wide x 107 mm long with orifice and 86 mm long without orifice.)
Control Range (fpm): 500 fpm up to 3500 fpm by changing orifice
Control Range (m/s): 2.5 m/s up to 17.8 m/s by changing orifice
Operating Humidity Range (% RH): 5 to 95% RH

Single Duct, Variable Constant Volume Application

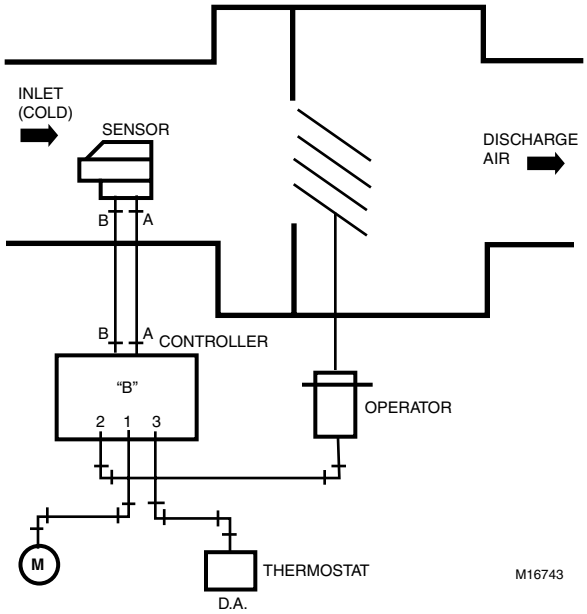

Dual Duct, Variable Constant Volume Application

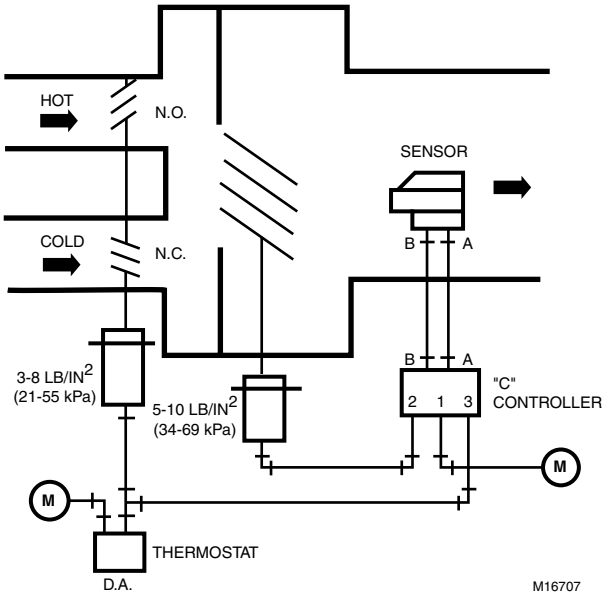

Material Number	Sensor Element	Pressure Rating (psi)	Pressure Rating (kPa)	Description	Comments
CP980C1065/U	Remote Sensor	Reset – 1 to 15 psi	Reset – 7 to 103 kPa	Direct acting Pneumatic Velocity Controller, uses "B" type supply unit	For normally open damper and one-pipe thermostat
CP980D1063/U	Remote Sensor	Reset – 1 to 15 psi	Reset – 7 to 103 kPa	Reverse acting Pneumatic Velocity Controller, uses "B" type supply unit	For normally closed damper and one-pipe thermostat
CP980E1060/U	Remote Sensor	Reset – 9 to 15 psi	Reset – 62 to 103 kPa	Direct acting Pneumatic Velocity Controller for reheat sequencing, uses "C" type supply unit	For normally open damper and two-pipe thermostat
CP980F1068/U	Remote Sensor	Reset – 9 to 15 psi	Reset – 62 to 103 kPa	Reverse acting Pneumatic Velocity Controller for reheat sequencing, uses "C" type supply unit	For normally closed damper and two-pipe thermostat

CP980C, D, E, and F Cross-Reference Table

Current Order Number (Less Orifice)	Orifice Order No.	Velocity Range ft/min (m/s)	Orifice Set	Replaces Honeywell		
				Original Set Less Orifice	Interim Matched Set (Less Orifice)	Matched Set (Includes Orifice)
CP980C1065	None	500 (2.5)	None	—	—	—
	14003642-002	750 (3.8)	Green			CP980C1016
	14003642-003	1500 (7.6)	White			CP980C1024
	14003642-004	2000 (10.2)	Blue			CP980C1032
	14003749-001	2500 (12.7)	Black			CP980C1040
	14003749-002	3500 (17.8)	Gray			CP980C1057
CP980D1063	None	500 (2.5)	None	CP980A1002/ RP980A1006 or CP980A1002/ RP980B1004	CP980B1000 or CP980B1018	—
	14003642-002	750 (3.8)	Green			CP980D1014
	14003642-003	1500 (7.6)	White			CP980D1022
	14003642-004	2000 (10.2)	Blue			CP980D1030
	14003749-001	2500 (12.7)	Black			CP980D1048
	14003749-002	3500 (17.8)	Gray RP980A1006 or RP980A1010/ RP980B1004	CP980A1010/ or CP980B1042	CP980B1034	CP980D1055
CP980E1060	None	500 (2.5)	None	—	—	—
	14003642-002	750 (3.8)	Green			CP980E1011
	14003642-003	1500 (7.6)	White			CP980E1029
	14003642-004	2000 (10.2)	Blue			CP980E1037
	14003749-001	2500 (12.7)	Black			CP980E1045
	14003749-002	3500 (17.8)	Gray			CP980E1052
CP980F1068	None	500 (2.5)	None	CP980A1002/ RP980C1002 CP980A1010/ RP980C1002[a]	CP980B1026 CP980B1059[a]	—
	14003642-002	750 (3.8)	Green			CP980F1019
	14003642-003	1500 (7.6)	White			CP980F1027
	14003642-004	2000 (10.2)	Blue			CP980F1035
	14003749-001	2500 (12.7)	Black			CP980F1043
	14003749-002	3500 (17.8)	Gray			CP980F1050

[a] Valid with green (1500 ft/min), red (2500 ft/min), white (3500 ft/min) or blue (4250 ft/min) orifices only.

Pneumatic Velocity Control Accessories and Replacement Parts

Material Number	Description	Used With
14003642-002/U	Orifice Green, Velocity Range 750 ft/min (3.8 m/s)	CP980
14003642-003/U	Orifice White, Velocity Range 1500 ft/min (7.6 m/s)	CP980
14003642-004/U	Orifice Blue, Velocity Range 2000 ft/min (10.2 m/s)	CP980
14003749-001/U	Orifice Black, Velocity Range 2500 ft/min (12.7 m/s)	CP980
14003749-002/U	Orifice Gray, Velocity Range 3500 ft/min (17.8 m/s)	CP980
14003931-006/U	Stainless steel SCCM flow Restriction of 120-160 at 100 kPa	CP980C; CP980E
316155A/U	Cover Assembly, RP908	RP908

LP920 Remote Bulb Temperature Controllers

Pneumatic temperature controllers provide proportional control of pneumatic valves and damper actuators in HVAC. Replacement devices are available for Johnson, Powers, Robertshaw, Barber-Colman, and older Honeywell pneumatic temperature controllers.

- Fahrenheit or Celsius scales for all adjustments.
- Pilot operated for high capacity.
- Direct Acting (DA) and Reverse Acting (RA) models are available.
- Adjustable setpoint and throttling ranges.
- Scales in bold type for high visibility.
- Replaceable filter cartridge.
- Single point or averaging elements.

Applications: Remote Bulb Temperature
Airflow Usage: 0.011 scfm (5.2 mL/s)
Sensor Element: Remote bulb
Maximum Safe Operating Pressure (psi): 30 psi
Maximum Safe Operating Pressure (kPa): 207 kPa
Temperature Range: Element: 230°F, Controller: 150°F (Element: 110°C, Controller: 66°C)

Shipping and Storage Temperature Range: 150°F (66°C)
Throttling Range: Factory set at 10°F with adjustment range of 5 to 25°F (Factory set at 6K with adjustment range of 3 to 15 K)
Dimensions: 5 9/16 in. high x 3 1/8 in. wide x 2 11/16 in. deep (142 mm high x 80 mm wide x 68 mm deep)
Comments: Scale plate is reversible for °F and °C applications

Dimensions Diagram in inches (millimeters)

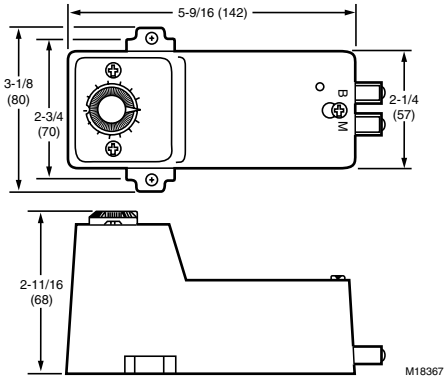

Typical mixed air control

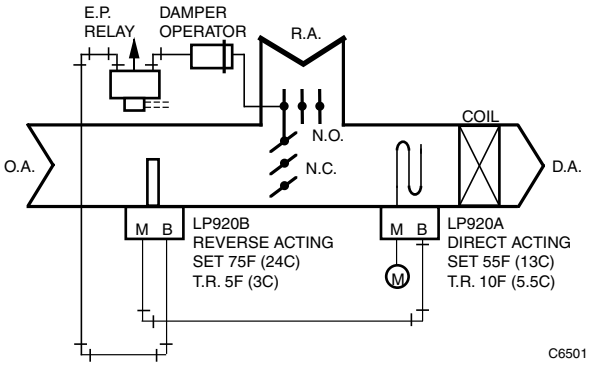

Typical coil discharge control

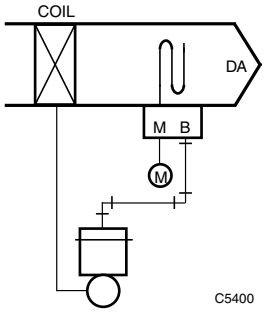

Material Number	Product Action	Number of Pipes	Setpoint Temperature Range	Includes
LP920A1005/U	Direct Acting	2	30°F to 150°F (-1°C to +66°C)	8 ft (2.4 m) averaging element for duct mounting
LP920A1013/U	Direct Acting	2	30°F to 150°F (-1°C to +66°C)	3/8 x 5 1/4 in. (10 x 133 mm) bulb with 3 in. (76 mm) capillary, well mount
LP920A1021/U	Direct Acting	2	30°F to 150°F (-1°C to +66°C)	3/8 x 5 1/4 in. (10 x 133 mm) bulb with 10 in. (254 mm) capillary, integral duct mount
LP920A1039/U	Direct Acting	2	30°F to 150°F (-1°C to +66°C)	3/8 x 5 1/4 in. (10 x 133 mm) bulb with 5 ft. (1.5 m) capillary, remote duct mount
LP920B1037/U	Reverse Acting	2	30°F to 150°F (-1°C to +66°C)	3/8 x 5 1/4 in. (10 x 133 mm) bulb with 5 ft. (1.5 m) capillary, remote duct mount

RP920 Pneumatic Controller

High capacity, single/dual input pneumatic controller, used in conjunction with remote sensors, to provide proportional (P) or proportional plus integral (P+I) control of temperature, humidity, pressure, or dewpoint for heating and air conditioning.

- Proportional plus integral control option minimizes offset.
- Miniature diaphragm technology provides high degree of accuracy and reliability.
- Direct Acting models can be converted to Reverse Acting (RA) function in field.
- Field adjustable compensation start point.
- Local or remote setpoint field option. Integral action cut-off provides trouble-free automatic startup.
- Transparent cover (optional) provides protection while allowing easy reading of settings and gages.
- Corrosion resistant construction.

Applications: Proportional plus integral pneumatic controller
Airflow Usage: 0.07 scfm (33.0 mL/s) with 1 psi (7kPa) pressure drop at 18 psi (124 kPa) main air supply
Maximum Safe Operating Pressure (psi): 30 psi
Maximum Safe Operating Pressure (kPa): 207 kPa
Pressure Ratings (psi): Input Signal – 3 to 15 psi; Output – 3 to 13 psi, output signal maximum is Mainline Pressure minus 1/2 psi
Pressure Rating (kPa): Input Signal – 21 to 103 kPa; Output – 21 to 90 kPa, output signal maximum is Mainline Pressure minus 7 kPa
Mainline Pressure Range (psi): 17 to 21 psi; Maximum Safe – 30 psi
Mainline Pressure Range (kPa): 115 to 145 kPa; Maximum Safe – 205 kPa
Temperature Range: 40°F to 130°F (5°C to 55°C)
Dimensions: 5 7/8 in. high x 3 13/16 in. wide x 3 1/4 in. without cover x 3 3/8 in. deep with cover (148 mm high x 96 mm wide x 83 mm without cover x 86 mm deep with cover)

Comments: The controller is capable of operating with the MLP (Mainline pressure) as low as 15 psi (100 kPa) or as high as 23 psi (160 kPa), however recalibration may be required. All RP920s can be converted to reverse acting in the field.
Operating Humidity Range (% RH): 5 to 95% RH
Connection Size (in.): Air: Combination 5/32 in. by 1/4 in. barb. Optional accessory 14003755-001 (barb fitting for port 4, 6, 7, or 8 for all RP920).

Accessories:
305929/U – 1-1/2 in. diameter, 1/8 NPT center back stem mount Receiver gauge (-40 to +160°F scale) with ±2% accuracy
305930/U – 1-1/2 in. diameter, 1/8 NPT center back stem mount Receiver gauge (0 to 200°F scale) with ±2% accuracy
305931/U – 1-1/2 in. diameter, 1/8 NPT center back stem mount Receiver gauge (40 to 240°F scale) with ±2% accuracy
305965/U – 1-1/2 in. diameter, 1/8 NPT center stem back mount Pressure Indicating gauge (0 to 30 psi scale) with ±4% accuracy
305972/U – Receiver gauge, 1-1/2 in. 1/8 NPT center back, temperature 50 to 100°F
14000786-001/U – Receiver Gauge, 25°F-125°F scale, 1 1/2 in. diameter, 1/8 in. NPT connection
14000786-002/U – Receiver Gauge, -5 to 55°C scale, 1 1/2 in. diameter, 1/8 in. NPT connection
14000786-003/U – Receiver Gauge, 15 to 75% RH scale, 1 1/2 in. diameter, 1/8 in. NPT connection
14000786-004/U – Receiver Gauge, 65 to 95% RH scale, 1 1/2 in. diameter, 1/8 in. NPT connection
14000786-005/U – Receiver Gauge, 15 to 85% RH scale, 1 1/2 in. diameter, 1/8 in. NPT connection
14505694-004/U – 17 3/4 inch (450 mm) long mounting rail for RP920
43188123-010/U – Clear plastic cover for all RP920B, RP920C, RP920D pneumatic controllers

Replacement Parts:
14004277-003/U – Setpoint module with gasket with CPA for RP920
14004278-002/U – Compensation module with gasket for RP920B and RP920D
14004533-001/U – Connector block with gasket and CPA for RP920
43188059-001/U – Setpoint knob for all RP920 pneumatic controllers
43915905-110/U – O-ring for filter in RP920

Material Number	Product Action	Capacity	Number of Sensor Inputs	Remote Control Point Adjustment	Includes
Proportional plus integral pneumatic controller					
RP920C1021/U	Direct Acting	at 18 psi (124 kPa) MLP and 8.5 psi (59 kPa) BLP (does not include sensor usage): 0.021 scfm (10 mL/s)	single	Yes	With remote control point adjustment capability.
RP920C1039/U	Direct Acting	at 18 psi (124 kPa) MLP and 8.5 psi (59 kPa) BLP (does not include sensor usage): 0.021 scfm (10 mL/s)	single	No	Without remote control point adjustment capability.
RP920D1029/U	Direct Acting	at 18 psi (124 kPa) MLP and 8.5 psi (59 kPa) BLP (does not include sensor usage): 0.046 scfm (21.7 mL/s)	dual	No	With remote control point adjustment capability.
Proportional pneumatic controller					
RP920A1025/U	Direct Acting	at 18 psi (124 kPa) MLP and 8.5 psi (59 kPa) BLP (does not include sensor usage): 0.021 scfm (10 mL/s)	single	Yes	With remote control point adjustment capability.
RP920A1033/U	Direct Acting	at 18 psi (124 kPa) MLP and 8.5 psi (59 kPa) BLP (does not include sensor usage): 0.021 scfm (10 mL/s)	single	No	Without remote control point adjustment capability.
RP920B1023/U	Direct Acting	at 18 psi (124 kPa) MLP and 8.5 psi (59 kPa) BLP (does not include sensor usage): 0.046 scfm (21.7 mL/s)	dual	Yes	With remote control point adjustment capability.
RP920B1031/U	Direct Acting	at 18 psi (124 kPa) MLP and 8.5 psi (59 kPa) BLP (does not include sensor usage): 0.046 scfm (21.7 mL/s)	dual	No	Without remote control point adjustment capability.

Dimensions Diagram in inches (millimeters)

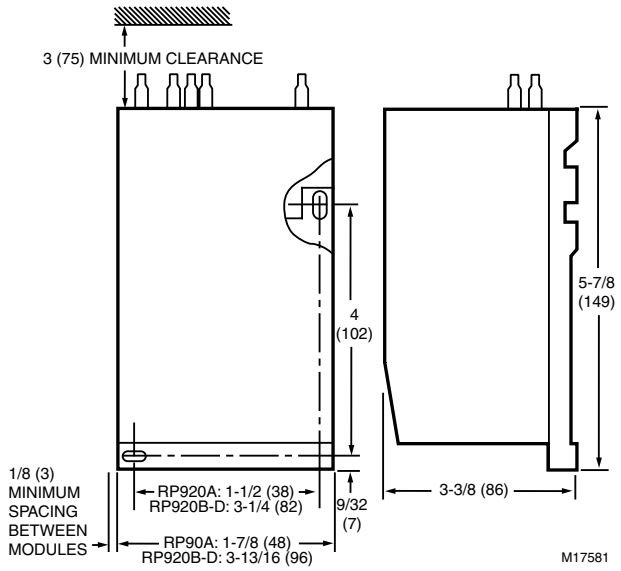

Typical Dual-Input Control System

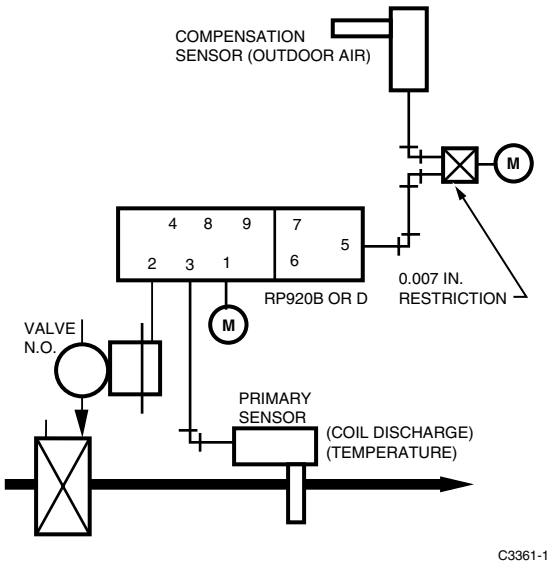

Typical Single-Input Control System

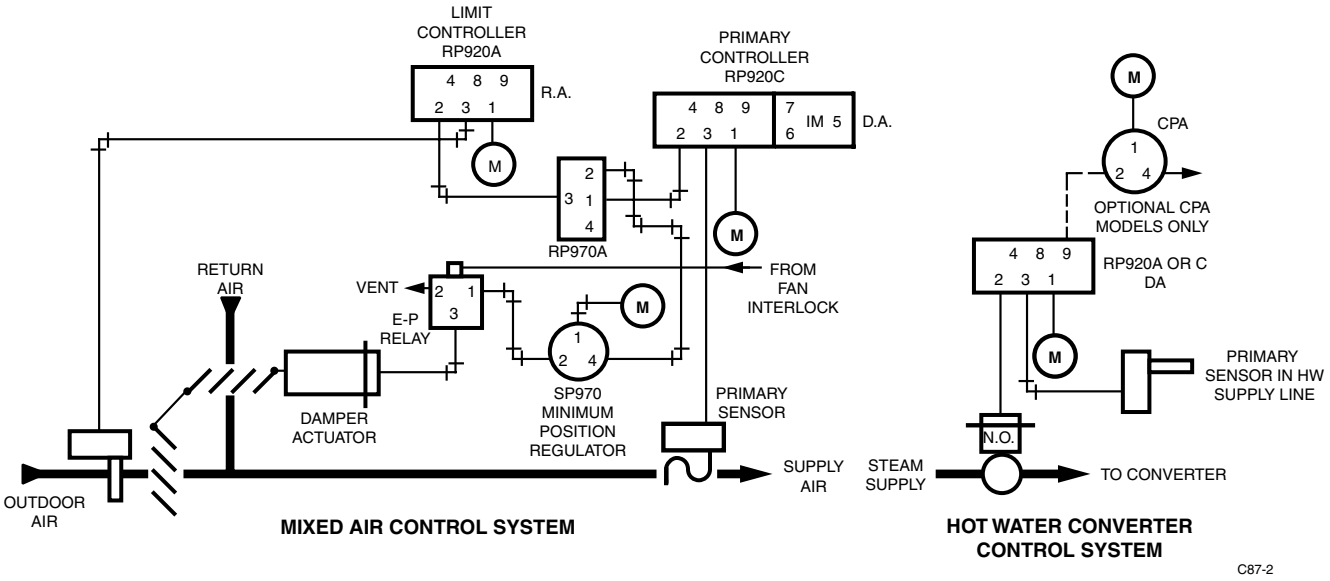

Pneumatic Temperature Controller Accessories

Material Number	Description	Used With
14000786-001/U	Receiver Gauge, 25°F-125°F scale, 1 1/2 in. diameter, 1/8 in. NPT connection	RP920
14000786-002/U	Receiver Gauge, -5 to 55°C scale, 1 1/2 in. diameter, 1/8 in. NPT connection	RP920
14000786-003/U	Receiver Gauge, 15 to 75% RH scale, 1 1/2 in. diameter, 1/8 in. NPT connection	RP920
14000786-004/U	Receiver Gauge, 65 to 95% RH scale, 1 1/2 in. diameter, 1/8 in. NPT connection	RP920
14000786-005/U	Receiver Gauge, 15 to 85% RH scale, 1 1/2 in. diameter, 1/8 in. NPT connection	RP920
14002696-001/U	Repair kit including filters, screens, washers, gaskets, O-rings, and restrictors for RP908A and RP908B controllers	RP908
14004278-002/U	Compensation module with gasket for RP920B and RP920D	RP920
14505694-002/U	225 mm Honeywell for RP920	RP920
14505694-004/U	17 3/4 inch (450 mm) long mounting rail for RP920	RP920
305617/U	1-1/2 in. diameter, 1/8 NPT center stem back mount Receiver gauge (1.0 to 3.0 in. w.c. scale) with ± 2% accuracy	RP920
305929/U	1-1/2 in. diameter, 1/8 NPT center back stem mount Receiver gauge (-40 to +160°F scale) with ± 2% accuracy	RP920
305930/U	1-1/2 in. diameter, 1/8 NPT center back stem mount Receiver gauge (0 to 200°F scale) with ± 2% accuracy	RP920
305931/U	1-1/2 in. diameter, 1/8 NPT center back stem mount Receiver gauge (40 to 240°F scale) with ± 2% accuracy	RP920
305965/U	1-1/2 in. diameter, 1/8 NPT center stem back mount Pressure Indicating gauge (0 to 30 psi scale) with ± 4% accuracy	RP920
305972/U	Receiver gauge, 1-1/2 in. 1/8 NPT center back, temperature 50 to 100°F scale	RP920
43188057-010	Clear plastic cover for all RP920A pneumatic controllers	RP920
43188123-010/U	Clear plastic cover for all RP920B, RP920C, RP920D pneumatic controllers	RP920
CCT813/U	Slide Rule for Calculating Pneumatic Controller Settings for all RP908 and RP920's.	RP908; RP920

Pneumatic Temperature Controller Replacement Parts

Material Number	Description	Used With
14003461-001/U	Mounting back plate	RP980
14003757-001/U	Seal screw for port 8 and O-ring repair parts for RP920	RP920
14004277-003/U	Setpoint module with gasket with CPA for RP920	RP920
14004533-001/U	Connector block with gasket and CPA for RP920	RP920
43188059-001/U	Setpoint knob for all RP920 pneumatic controllers	RP920
43915905-110/U	O-ring for filter in RP920	RP920

PP901; PP902 Pressure Reducing Valves

PP901 pneumatic valve controls the pressure of the air delivered to pneumatic control systems. Models available for single-pressure systems or two-pressure systems (Day/Night or Summer/Winter) requiring two independently regulated pressure settings.

- Built-in adjustable safety relief valve for limiting downstream pressure.
- For two-pressure models: Pressure changes accomplished with manual switch or automatically with electric pneumatic switch.
- Adjustable stops for desired settings.

Pressure Ratings (psi): Inlet – 45 to 150 psi; Output – primary pressure: adjustable 0 to 25 psi
Pressure Ratings (kPa): Inlet – 310 to 1034 kPa; Output – primary pressure: adjustable 0 to 172 kPa
Dimensions: 11 in. high, 8 7/8 in. wide, 3 3/4 in. deep (279 mm high, 225 mm wide, 95 mm deep)
Mounting: Bracket furnished

Accessories:
305917/U – 2 in. diameter, 1/4 NPT center stem back mount Pressure Indicating gauge (0 to 160 psi scale) with ±3% accuracy
305965/U – 1-1/2 in. diameter, 1/8 NPT center stem back mount Pressure Indicating gauge (0 to 30 psi scale) with ±4% accuracy
804191E/U – 2-1/2 in. diameter, panel-mounted Pneumatic Pressure Indicating Gauge (0 to 160 psi), 1/8 in. NPT connection, +/-3% accuracy

Replacement Parts:
316203A/U – Pressure Regulator Valve Assembly for PP901A; PP902A, C
316134B/U – PP901A & B Diaphragm Repair Kit
14004203-001/U – Filter cartridge kit for PP902C and PP902D.
14004205-002/U – Filter Station Assembly for PP901, PP902A or B
14003121-002/U – Filter for PP902A or B

PP901 Dimensions in inches (millimeters)

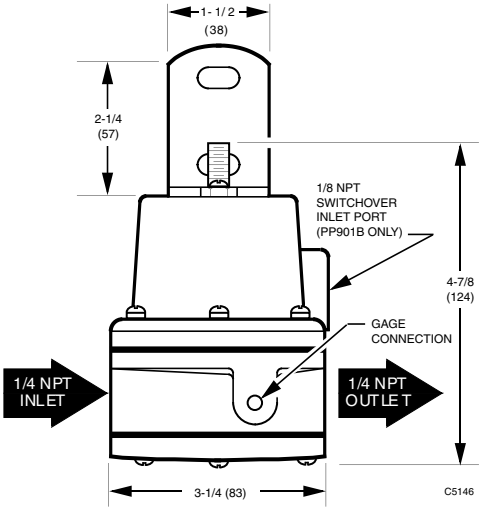

PP902 Dimensions in inches (millimeters)

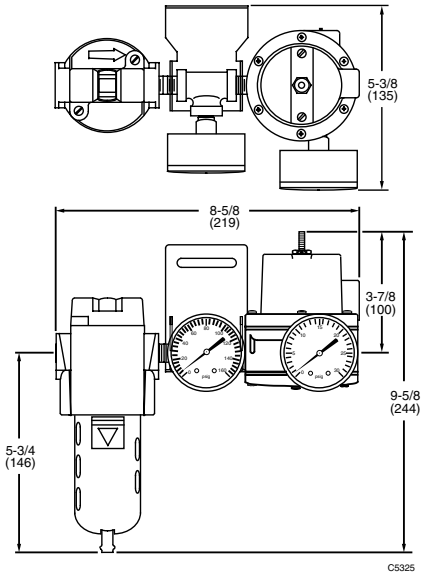

PP902C Typical Operation

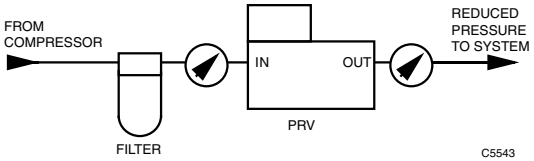

PP902D Typical Operation

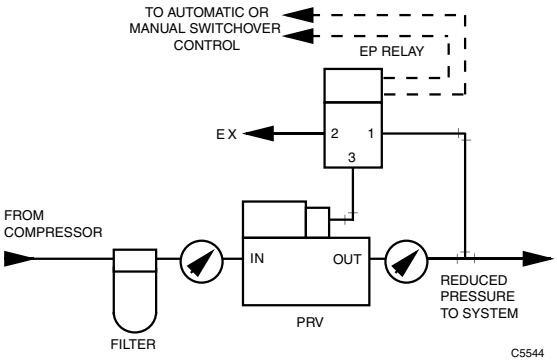

Material Number	Applications	Description	Connection Size (in.)	Includes
PP901A1004/U	Pressure Reducing	High Pressure Diaphragm Operated Reducing Valve with Built-in Adjustable Relief Valve for Single Pressure Systems. Includes Mounting Bracket and Gage Taps But No Gages.	Inlet and out air: 1/4 in. NPT (female) Air gage: 1/8 in. NPT (female)	Gage tapping to measure the regulated pressure.
PP901B1002/U		High Pressure Diaphragm Operated Reducing Valve with Built-in Adjustable Relief Valve for Dual Pressure Systems. Includes Mounting Bracket and Gage Taps But No Gages.	Inlet and out air: 1/4 in. NPT (female) Air gage: 1/8 in. NPT (female); 1/8 in. NPT pilot	Gage tapping to measure the regulated pressure.
PP902C1009/U		Pressure Reducing Valve for Single Pressure Systems, consists of a PP901A Valve, a sub-micron filter station, 2 psig gages, Interconnecting Pipe Fittings, and a Mounting Bracket	Inlet and out air: 1/4 in. NPT (female); 1/8 in. NPT pilot	Sub-micron filter assembly and two psig gages.
PP902D1007/U		Pressure Reducing Valve for Dual Pressure Systems, consists of a PP901B Valve, a sub-micron filter station, 2 psig gages, Interconnecting Pipe Fittings, and a Mounting Bracket	Inlet and out air: 1/4 in. NPT (female)	Sub-micron filter assembly and two psig gages.

PP903 Pneumatic Differential Pressuretrol

Provides proportional control of pneumatic actuators by varying the pressure between separate water pressures. Replacement devices are available for Johnson, Powers, Robertshaw, and older Honeywell pneumatic pressure controllers.

- Easily accessible adjustments.
- Direct Acting (DA) or Reverse Acting (RA) setting.
- Mounting lugs for quick mounting.

Applications: Differential Pressure
Product Action: Reverse Acting, Direct Acting
Pressure Ratings (psi): 0 to 300 psi
Pressure Ratings (kPa): 0 to 2068 kPa
Dimensions: 8 5/8 in. high, 9 5/8 in. wide, 3 1/4 in. deep (219 mm high, 244 mm wide, 83 mm deep)

Mounting: Lugs for 3-point surface mounting
Connection Size (in.): Input: 1/4 in. NPT; Branch Line: 1/8 in. NPT
Approximate Throttling Range, Midscale (psi): 25 psi Maximum
Approximate Throttling Range, Midscale (kPa): 172 kPa Maximum

Dimensions Diagram in inches (millimeters)

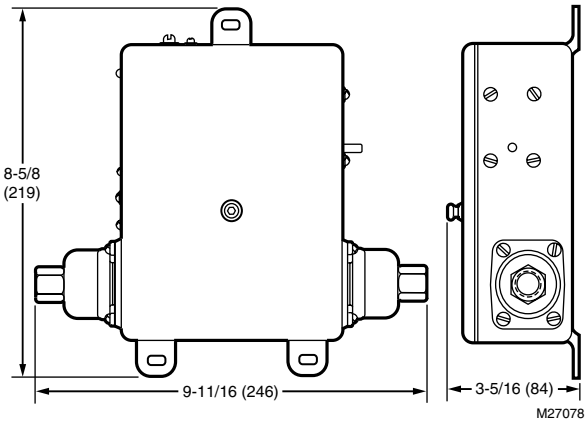

PP903A Typical Piping

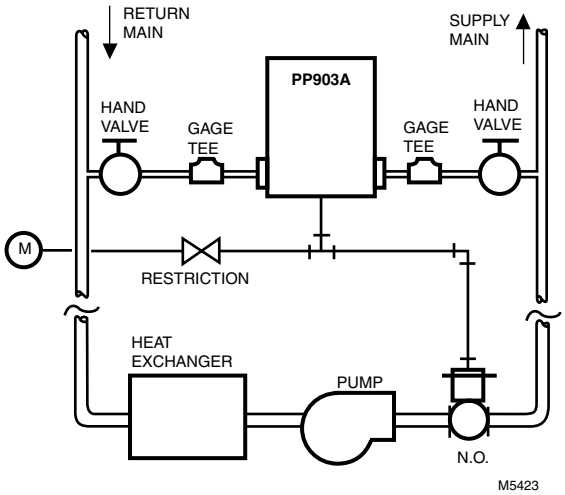

Material Number	Actuator Force (psi)	Actuator Force (kPa)	Maximum Safe Operating Pressure (psi)	Maximum Safe Operating Pressure (kPa)	Differential Pressure Range (psi)	Differential Pressure Range (kPa)
PP903A1036/U	7.5 psi	52 kPa	18 psi	124 kPa	5 to 65 psi	34 to 448 kPa

PP904 Static Pressure Regulators

One- or two-pipe, direct- or reverse-acting, low- or high-capacity controller used with pneumatic actuators in central fan installations. Replacement devices are available for Johnson, Powers, Robertshaw, Barber-Colman, and older Honeywell devices.

- Adjustable setpoint and throttling range (Zero and span).
- Direct Acting (DA) and Reverse Acting (RA).
- Sharp-barb, push-on connectors for plastic tubing.
- Field calibration possible.

Applications: Static or Differential Pressure
Product Action: Reverse Acting, Direct Acting
Pressure Ratings (psi): Maximum Safe Static Pressure – 28 in. wc
Pressure Ratings (kPa): Maximum Safe Static Pressure – 7 kPa
Mainline Pressure Range (psi): 16 to 25 psi
Mainline Pressure Range (kPa): 112 to 175 kPa
Temperature Range: 40°F to 120°F (5°C to 50°C)
Connection Size (in.): Main: Sharp-barbed fittings for 1/4 in. diameter tubing; Branch: Sharp-barbed fittings for 5/32 in. diameter tubing
Setpoint Range (psi): 0 to ±8 in. wc (adjustable)
Setpoint Range (kPa): 0 to ±2 kPa (adjustable)

Accessories:
14004238-001/U – Static Pressure Duct Head for 1/4 in., 6 mm diameter Plastic Tubing
301298B/U – Outdoor Static Pressure Head

Dimensions Diagram in inches (millimeters)

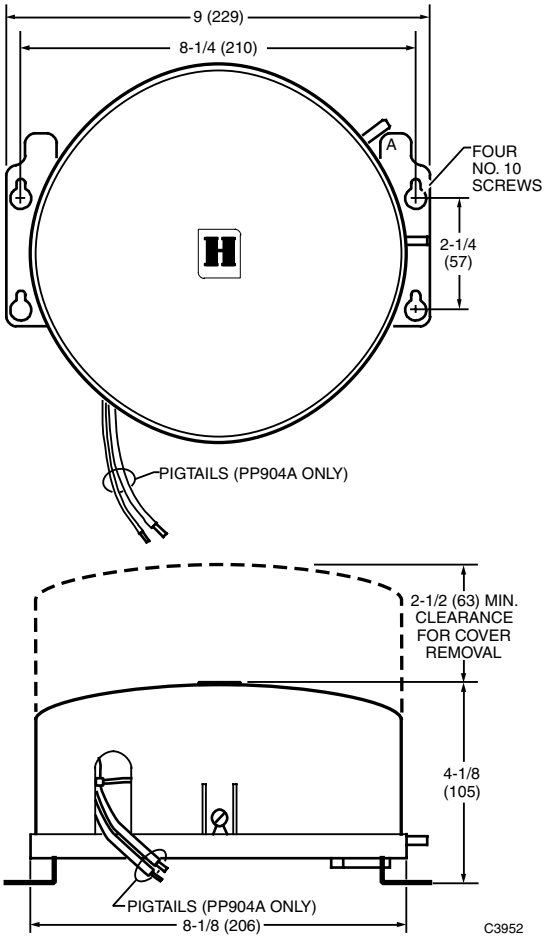

PP904A Typical Piping

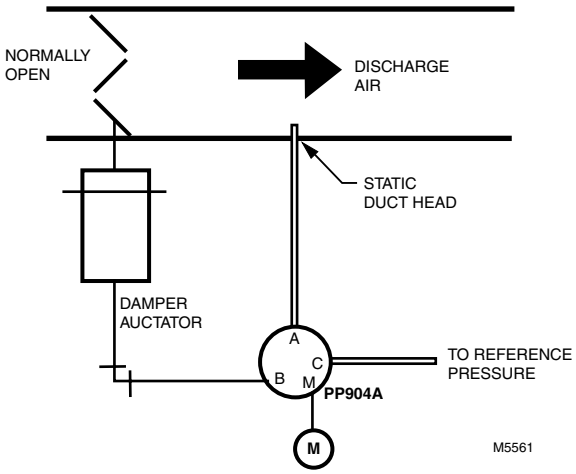

PP904B Typical Piping

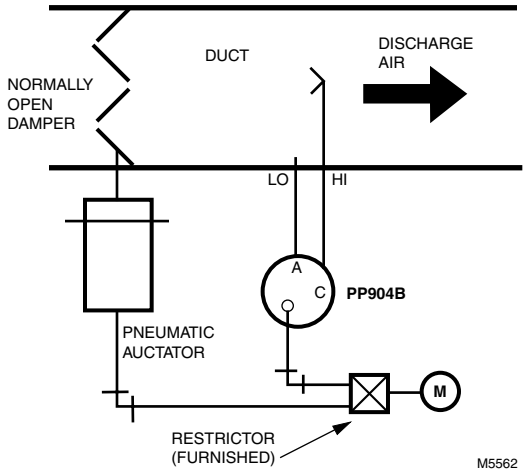

Material Number	Maximum Safe Operating Pressure (psi)	Maximum Safe Operating Pressure (kPa)	Throttling Range (in. wc)	Number of Pipes	Airflow Usage	Mounting	Comments
PP904A1035/U	25 psi	170 kPa	0.03 to 0.5 in wc (adjustable)	2	0.022 scfm (10.0 mL/s) at 18 psi (124 kPa)	Duct mount	High capacity branchline pressure
PP904B1009/U	25 psi	170 kPa	0.06 to 0.5 in. wc (adjustable)	1			Low capacity branchline pressure

PP905 Static Pressure Sensor

PP905 is a one-pipe, direct- or reverse-acting pressure sensor, used with RP908/RP920 Controllers, to provide control of duct static, velocity or differential pressure in airflow applications. Replacement devices are available for most models.

- Three-diaphragm design minimizes calibration shift with static pressure changes in velocity pressure applications.
- Not sensitive to normal supply air variations.
- Continuous static, total, velocity, or differential pressure indication available by using differential pressure gage.

Applications: Static Pressure
Airflow Usage: 0.021 cfm (9.9 ml/s)
Product Action: Can be set for Direct Acting or Reverse Acting
Pressure Ratings (psi): Maximum Safe Static Pressure – 28 in. wc; Output – 3 to 15 psi
Pressure Ratings (kPa): Maximum Safe Static Pressure – 7 kPa; Output – 21 to 103 kPa
Mainline Pressure Range (psi): 16 to 25 psi
Mainline Pressure Range (kPa): 112 to 175 kPa
Temperature Range: 40°F to 120°F (4°C to 50°C)

Dimensions: 8 in high, 9 in wide, 4 1/8 in deep (203 mm high, 228 mm wide, 105 mm deep)
Mounting: Duct mount
Connection Size (in.): Push-on barb for 1/4 in (6 mm) Diameter tubing

Accessories
14004238-001/U – Static Pressure Duct Head for 1/4 in., 6 mm diameter

Dimensions Diagram in inches (millimeters)

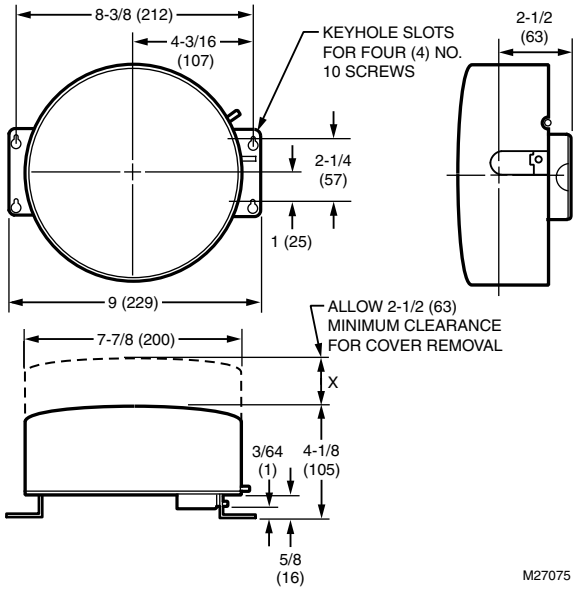

PP905 in Pneumatic Static Pressure Application

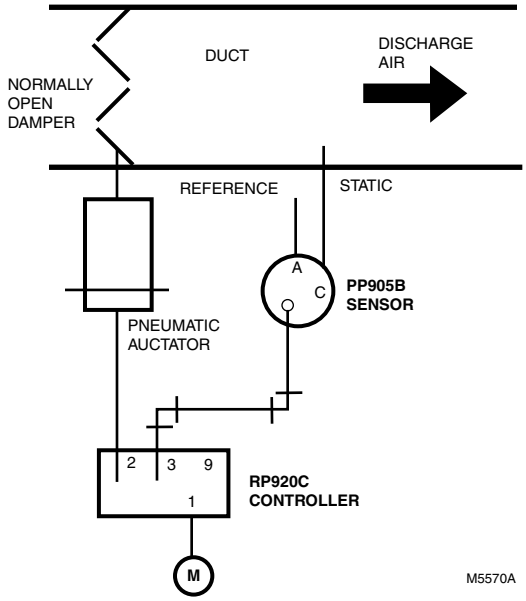

Material Number	Maximum Safe Operating Pressure (psi)	Maximum Safe Operating Pressure (kPa)	Setpoint Range (psi)	Setpoint Range (kPa)	Span (Non-Adjustable) (in. wc)	Span (Non-Adjustable) (kPa)	Comments
PP905B1008/U	25 psi	172 kPa	0 in. wc. to 7 in. wc. (Adjustable)	0 kPa to 1.7 kPa (Adjustable)	2 in. wc.	0.5 kPa	The setpoint determines the midpoint of the span.

PP97 Pneumatic Pressure Control

PP97 is a one-pipe, pressure operated device, that provides proportional control of pneumatic valves to control steam, air, noncorrosive gas, or noncorrosive liquid pressure. Replacement devices are available for many models.

- Easily accessible adjustments.
- Direct Acting (DA) or Reverse Acting (RA) setting.

Applications: Proportional Pressure
Product Action: Reverse Acting, Direct Acting
Dimensions: 7 in. high, 5 in. wide, 3-1/8 in. deep (178 mm high x 127 mm wide x 79 mm deep)
Mounting: Lugs for 3-point surface mounting
Connection Size (in.): Bellows: 1/4 in. NPT; Air: 1/8 in. NPT

Dimensions Diagram in inches (millimeters)

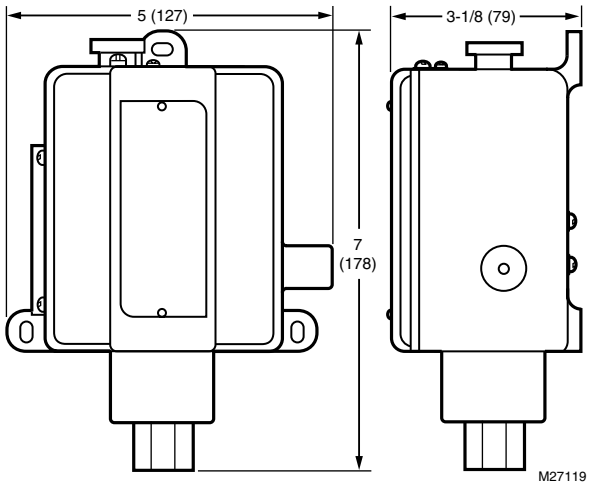

PP97A Typical Piping

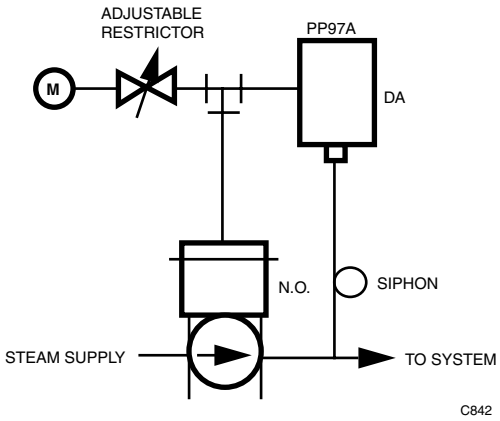

Material Number	Maximum Safe Operating Pressure (psi)	Maximum Safe Operating Pressure (kPa)	Setpoint Range (psi)	Setpoint Range (kPa)	Approximate Throttling Range, Midscale (psi)	Approximate Throttling Range, Midscale (kPa)	Description
PP97A1035/U	25 psi	172 kPa	0 to 15 psi	0 to 103 kPa	0.1 to 1.5 psi	0.7 to 10 kPa	Pneumatic Pressure Controller, Proportional Pressure, Action: Direct or Reverse, Output: Proportional Pressure, 0 to 15 psi pressure range
PP97A1076/U	350 psi	2413 kPa	10 to 300 psi	69 to 2068 kPa	2.5 to 12 psi	17 to 83 kPa	Pneumatic Pressure Controller, Proportional Pressure, Action: Direct or Reverse, Output: Proportional Pressure, 10 to 300 psi pressure range

UEC24014 Differential Pressure Switch

Differential pressure switches open or close a switch contact in response to a change in sensed differential pressure.

- NEMA Enclosures.
- UL and CSA Listed.
- Gold Clad Contacts.
- Brass Pipe Connection.
- Pipe or Surface Mount.

Pressure Ratings (psi): 150 psi at either port
Pressure Ratings (kPa): 1034 kPa at either port
Temperature Range: 30°F to 160°F (-1°C to +71°C)
Dimensions: 3 1/2 in. high x 2 3/8 in. wide (89 mm high x 58 mm wide)
Mounting: Pipe or surface

Connection Size (in.): Electric connection: terminal strip, 16 AWG max.; Pipe connection: Brass, 1/4 in. NPT
Approvals, Underwriters Laboratories Inc: Certified
Approvals, CSA: Approved
Approvals, Factory Mutual: Approved
Approvals, NEMA Standard: NEMA 1

Material Number	Differential Pressure Range (psi)	Differential Pressure Range (kPa)	Description
UEC24014M262/U	4 to 45 psi	28 to 310 kPa	Pneumatic, Type of control: Pneumatic, NEMA 1, 150 psi at either end
UEC24014M262M900/U	4 to 45 psi	28 to 310 kPa	Pneumatic, Type of control: Pneumatic, NEMA 4, 150 psi at either end

Pneumatic Pressure Controller Accessories and Replacement Parts

Material Number	Description	Used With
14003121-002/U	Filter for PP902A or B	PP902A,B
14004203-001/U	Filter cartridge kit for PP902c and PP902D	PP902C,D
14004205-002/U	Filter Station Assembly for PP901, PP902A or B	PP902A,B; PP901
14004238-001/U	Static Pressure Duct Head for 1/4 in., 6 mm diameter Plastic Tubing	PP904
301298B/U	Outdoor Static Pressure Head	PP904
316203A/U	Pressure Regulator Valve Assembly for PP901A; PP902A, C	PP901A; PP902A, C

HP971 Pneumatic Humidity Sensor

One- or two-pipe, direct-acting humidity sensor used with RP908/ RP920 Controllers to provide proportional control of pneumatic valve or damper actuators in systems requiring humidification or dehumidification control.

- Corrosion resistant materials.
- Simple plug-in air head connections.
- Factory calibrated.
- Continuous relative humidity indication available by using receiver gage.
- Integral or external restriction can be used.

Applications: Humidity Sensor
Mounting: Vertical or Horizontal Wall Mounting or Mounted in Duct Sampling Chamber
Operating Temperature Range: 125°F Maximum (52°C Maximum)
Dimensions: 3 1/4 in. high x 2 in. wide x 1 5/8 in. deep (88 mm high x 51 mm wide x 41 mm deep)
Product Action: Direct Acting

Airflow Usage: 0.022 scfm (10.4 mL/s)
Connections: Push-on barb for 5/32 in. (4 mm) O.D. tubing
Maximum Safe Operating Pressure (psi): 25 psi
Maximum Safe Operating Pressure (kPa): 172 kPa
Pressure Ratings (psi): Output – 3 psi to 15 psi; Supply – 16 to 21 psi
Pressure Ratings (kPa): Output – 21 kPa to 103 kPa; Supply – 110-145 kPa

HP971A One-Pipe Application

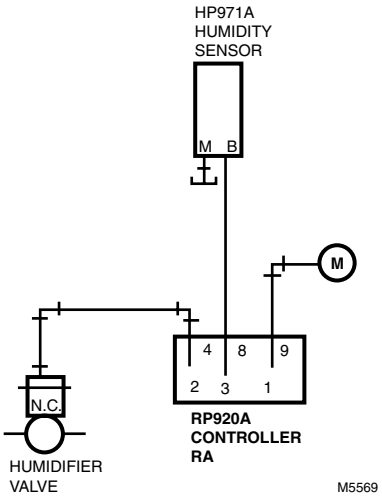

HP971A Two-Pipe Application

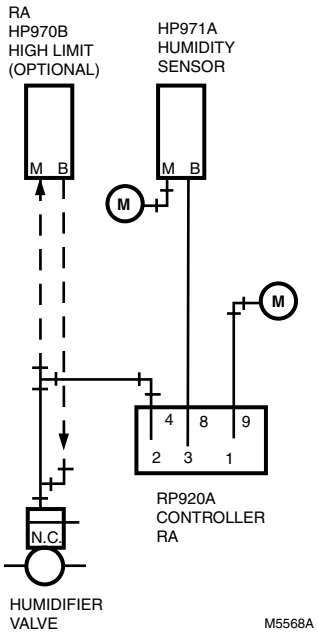

Material Number	Number of Pipes	Sensor Range	Comments
HP971A1008/U	1 or 2	15 to 75% RH	Order Cover Separately
HP971A1024/U	1 or 2	15 to 85% RH	Order Cover Separately

LP914 Pneumatic Temperature Sensor

One-pipe, direct-acting temperature sensor used with RP908/ RP920 Controllers to provide proportional control of pneumatic valve or damper actuators. Rod and tube insertion element for duct, well, or through-the-wall mounting.

- Corrosion resistant.
- Continuous temperature indication available by using receiver gage.

Applications: Temperature Sensor
Operating Temperature Range: 265°F Maximum (129°C Maximum)
Dimensions: Body: 2 in. high x 2 1/2 in. wide (Body: 51 mm high x 64 mm wide)
Product Action: Direct Acting
Airflow Usage: 0.019 scfm (540 sccm)
Connections: Push-on barb for 5/32 in. (4 mm) and 1/4 in. (6 mm) O.D. tubing
Maximum Safe Operating Pressure (psi): 25 psi
Maximum Safe Operating Pressure (kPa): 172 kPa
Pressure Ratings (psi): Output – 3 psi to 15 psi; Supply – 18 psi
Pressure Ratings (kPa): Output – 21 kPa to 103 kPa; Supply – 124 kPa

Accessories:
315046A/U – Well, 1/2 NPT Copper, 15 1/2 in. (392 mm) long
315046B/U – Well, 1/2 NPT Copper, 7 1/2 in. (191 mm) long
315602/U – Inner Filter
315904A/U – Well, 1/2 NPT Stainless Steel, 15 7/16 in. (394 mm)
315904B/U – Well, 1/2 in. NPT stainless steel 7 5/16 in. (186 mm) long

Dimensions Diagram in inches (millimeters)

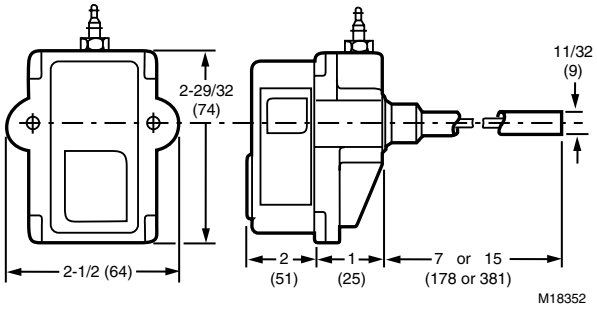

LP914 Typical Piping Duct-Mounted Applications

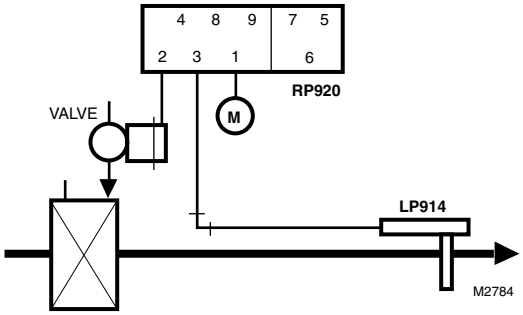

Material Number	Number of Pipes	Sensor	Sensor Range	Mounting	Insertion Length
LP914A1003/U	1	Rod and tube	-40°F to +160°F; -40°C to +71°C	Duct mount	15 in. (381 mm)
LP914A1011/U	1	Rod and tube	-40°F to +160°F; -40°C to +71°C	Wall mount	27 in. (686 mm)
LP914A1029/U	1	Rod and tube	40°F to 240°F; 5°C to 115°C	Well	15 in. (381 mm)
LP914A1045/U	1	Rod and tube	-40°F to +160°F; -40°C to +71°C	Duct mount	7 in. (178 mm)
LP914A1052/U	1	Rod and tube	40°F to 240°F; 5°C to 115°C	Well	7 in. (178 mm)
LP914A1060/U	1	Rod and tube	-40°F to +160°F; -40°C to +71°C	Well	7 in. (178 mm)
LP914A1144/U	1	Rod and tube	25°F to 125°F; -4°C to +52°C	Duct mount	15 in. (381 mm)
LP914A1151/U	1	Rod and tube	-40°F to +160°F; -40°C to +71°C	Duct mount	15 in. (381 mm)
LP914A1177/U	1	Rod and tube	40°F to 240°F; 5°C to 115°C	Well	15 in. (381 mm)
LP914A1193/U	1	Rod and tube	-40°F to +160°F; -40°C to +71°C	Duct mount	6 1/2 in. (165 mm)
LP914A1201/U	1	Rod and tube	40°F to 240°F; 5°C to 115°C	Well	6 1/2 in. (165 mm)
LP914A1235/U	1	Rod and tube	25°F to 125°F; -4°C to +52°C	Duct mount	15 in. (381 mm)
LP914A1243/U	1	Rod and tube	-20°F to +80°F; -30°C to +30°C	Duct mount	15 in. (381 mm)
LP914A1268/U	1	Rod and tube	40°F to 240°F; 5°C to 115°C	Duct or Well mount	15 in. (381 mm)

LP915 Pneumatic Temperature Sensor

One-pipe, direct-acting temperature sensor used with RP908/ RP920 Controllers to provide proportional control of pneumatic valve or damper actuators. Averaging, liquid-filled element for duct mounting.

- Easily formed into variety of configurations to assure sensing of average temperatures.
- Continuous temperature indication available by using receiver gage.

Applications: Temperature Sensor
Operating Temperature Range: 225°F Maximum (118°C Maximum)
Dimensions: 3 in. high x 1 7/8 in. wide x 1 1/2 in. deep (76 mm high x 44 mm wide x 33 mm deep)
Product Action: Direct Acting
Airflow Usage: 0.019 scfm (540 sccm)
Connections: Push-on barb for 5/32 in. (4 mm) and 1/4 in. (6 mm) O.D. tubing
Maximum Safe Operating Pressure (psi): 25 psi
Maximum Safe Operating Pressure (kPa): 172 kPa
Pressure Ratings (psi): Output – 3 psi to 15 psi; Supply – 18 psi
Pressure Ratings (kPa): Output – 21 kPa to 103 kPa; Supply – 124 kPa

LP915A Typical Piping Duct-Mounted Application

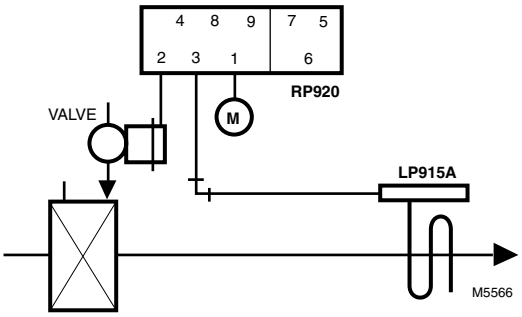

Material Number	Number of Pipes	Sensor	Sensor Range	Mounting	Insertion Length
LP915A1044/U	1	Liquid-filled	0°F to 200°F; -18°C to +93°C	Duct mount	18 1/2 ft (5.6m)
LP915A1051/U	1	Liquid-filled	0°F to 200°F; -18°C to +93°C	Duct mount	8 7/8 ft (2.7m)
LP915A1077/U	1	Liquid-filled	25°F to 125°F; -4°C to +52°C	Duct mount	18 1/2 ft (5.6m)

TP974 Pneumatic Temperature Sensor

One- or two-pipe direct-acting temperature sensor used with RP908/RP920 Controllers to provide proportional control of pneumatic valve and damper actuators.

- Plug-in air connections.
- High efficiency air filter.
- Bimetal element.
- Continuous temperature indication available by using receiver gage.

Applications: Temperature Sensor
Operating Temperature Range: 110°F Maximum (43°C Maximum)
Dimensions: 3 1/4 in. high x 2 in. wide x 1 5/8 in. deep (83 mm high x 51 mm wide x 41 mm deep)
Product Action: Direct Acting
Airflow Usage: 0.019 scfm (9 mL/s)
Maximum Safe Operating Pressure (psi): 25 psi
Maximum Safe Operating Pressure (kPa): 170 kPa
Pressure Ratings (psi): Output – 3 psi to 15 psi; Supply – 16-25 psi
Pressure Ratings (kPa): Output – 21 kPa to 103 kPa; Supply – 110 to 172 kpa

TP974A Typical Piping

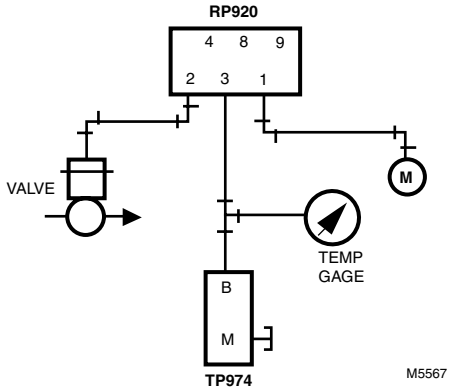

Material Number	Number of Pipes	Sensor	Sensor Range	Mounting	Comments
TP974A2000/U	1 or 2	Bimetal	50°F to 100°F; 10°C to 38°C	Vertical or Horizontal Wall Mounting	Order Cover Separately

Pneumatic Sensor Accessories

Material Number	Description	Used With
314439/U	Duct Mounting Clip for Averaging Capillary. For Bulk Pack 314439/B	LP915
315046A/U	1/2 in. NPT copper Well, 15 1/2 in. (392 mm) long	LP914
315046B/U	1/2 in NPT copper Well, 7 1/2 in. (191 mm) long	LP914
315602/U	Inner Filter for LP907; LP914; LP915	LP907; LP914; LP915
315904A/U	1/2 in. NPT stainless steel Well, 15 7/16 in., (394 mm) long	LP914
315904B/U	1/2 in. NPT stainless steel Well, 7 5/16 in. (186 mm) long	LP914

RP418, RP818 Electric/Pneumatic Relay

Electrically operated pneumatic switches used to interlock an electrical system and a pneumatic control system. Replacement devices are available for Johnson, Powers, Robertshaw, Barber-Colman, and older Honeywell devices.

- Usable as a diverting relay, a selector relay, or a stop and bleed relay.
- Mount and operate in any position.
- Available with lead wires or junction box.
- Line or low voltage models available.

Applications: Electric / Pneumatic Relay
Airflow Usage: 0.42 scfm (200 mL/s) at 20 psi (138 kPa) supply with 1 psi (7 kPa) pressure drop
Capacity: 0.075 Cv minimum
Air Connections: Barbed fitting for 1/4 in. O.D. plastic tubing
Operating Humidity Range (% RH): 5 to 95% RH
Dimensions: 2 7/8 in. high x 3 13/16 in. wide x 1 1/4 in. deep (73 mm high x 97 mm wide x 32 mm deep)

Temperature Range: 0°F to 100°F (-18°C to +38°C)
Maximum Safe Operating Pressure (psi): 50 psi, maximum
Maximum Safe Operating Pressure (kPa): 340 kPa, maximum
Approvals, Underwriters Laboratories Inc: Component Recognized File: MP1502, Vol. 11, Sec. 1, UL Listed: Guide Y10Z
Approvals, CSA: Listed: File No. LR50900
Approvals, Canadian Underwriters Laboratories Inc: Listed: File No. LR50900

Material Number	Operation	Electrical Connections	Mounting	Voltage	Frequency	Includes
RP418A1008/U	Energized: ports 1 and 3 connected, port 2 blocked, De-energized: ports 2 and 3 connected, port 1 blocked	Junction Box and 15 in. (380 mm) leads	Surface	208 Vac	50 Hz	Junction Box
RP418A1057/U	Energized: ports 1 and 3 connected, port 2 blocked, De-energized: ports 2 and 3 connected, port 1 blocked	Junction Box and 15 in. (380 mm) leads	Surface	120 Vac	50 Hz	Junction Box
RP418A1065/U	Energized: ports 1 and 3 connected, port 2 blocked, De-energized: ports 2 and 3 connected, port 1 blocked	Junction Box and 15 in. (380 mm) leads	Surface	440 Vac at 50 Hz; 480 Vac at 60 Hz	50 Hz; 60 Hz	Junction Box
RP418A1073/U	Energized: ports 1 and 3 connected, port 2 blocked, De-energized: ports 2 and 3 connected, port 1 blocked	Junction Box and 15 in. (380 mm) leads	Surface	277 Vac	60 Hz	Junction Box
RP418A1081/U	Energized: ports 1 and 3 connected, port 2 blocked, De-energized: ports 2 and 3 connected, port 1 blocked	Junction Box and 15 in. (380 mm) leads	Surface	208 Vac	60 Hz	Junction Box
RP418A1099/U	Energized: ports 1 and 3 connected, port 2 blocked, De-energized: ports 2 and 3 connected, port 1 blocked	Junction Box and 15 in. (380 mm) leads	Surface	220 Vac at 50 Hz; 240 Vac at 60 Hz	50 Hz; 60 Hz	Junction Box
RP418A1107/U	Energized: ports 1 and 3 connected, port 2 blocked, De-energized: ports 2 and 3 connected, port 1 blocked	Junction Box and 15 in. (380 mm) leads	Surface	110 Vac at 50 Hz; 120 Vac at 60 Hz	50 Hz; 60 Hz	Junction Box
RP418A1115/U	Energized: ports 1 and 3 connected, port 2 blocked, De-energized: ports 2 and 3 connected, port 1 blocked	Junction Box and 15 in. (380 mm) leads	Surface	277 Vac at 50 Hz; 575 Vac at 60 Hz	50 Hz; 60 Hz	
RP418B1022/U	Energized: ports 1 and 3 connected, port 2 blocked, De-energized: ports 2 and 3 connected, port 1 blocked	15 in. (380 mm) leads	Panel mount	240 Vac	50 Hz	
RP418B1030/U	Energized: ports 1 and 3 connected, port 2 blocked, De-energized: ports 2 and 3 connected, port 1 blocked	15 in. (380 mm) leads	Panel mount	120 Vac	50 Hz	
RP418B1048/U	Energized: ports 1 and 3 connected, port 2 blocked, De-energized: ports 2 and 3 connected, port 1 blocked	15 in. (380 mm) leads	Panel mount	440 Vac at 50 Hz; 480 Vac at 60 Hz	50 Hz; 60 Hz	
RP418B1055/U	Energized: ports 1 and 3 connected, port 2 blocked, De-energized: ports 2 and 3 connected, port 1 blocked	15 in. (380 mm) leads	Panel mount	208 Vac	60 Hz	
RP418B1071/U	Energized: ports 1 and 3 connected, port 2 blocked, De-energized: ports 2 and 3 connected, port 1 blocked	15 in. (380 mm) leads	Panel mount	110 Vac at 50 Hz; 120 Vac at 60 Hz	50 Hz; 60 Hz	
RP818A1004/U	Energized: ports 1 and 3 connected, port 2 blocked, De-energized: ports 2 and 3 connected, port 1 blocked	Junction Box and 15 in. (380 mm) leads	Surface	24 Vac	60 Hz	Junction Box
RP818B1002/U	Energized: ports 1 and 3 connected, port 2 blocked, De-energized: ports 2 and 3 connected, port 1 blocked	15 in. (380 mm) leads	Panel mount	24 Vac	60 Hz	
RP818B1010/U	Energized: ports 1 and 3 connected, port 2 blocked, De-energized: ports 2 and 3 connected, port 1 blocked	15 in. (380 mm) leads	Panel mount	24 Vac	50 Hz	

Internal Connections

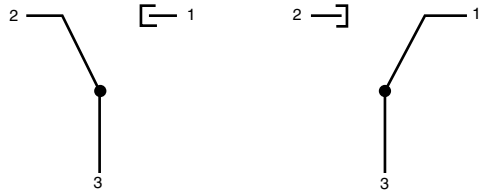

DEENERGIZED:
PORTS 2 AND
3 CONNECTED,
PORT 1 BLOCKED.

ENERGIZED:
PORTS 1 AND
3 CONNECTED,
PORT 2 BLOCKED.

M5428

RP418 & RP818 Typical Piping and Wiring

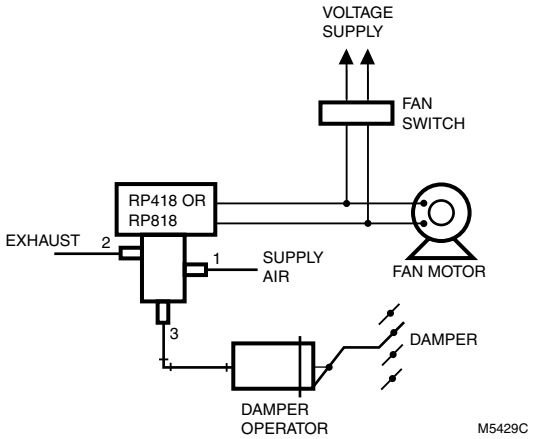

RP470 Pneumatic Selector Relay

Three-port relays are used in HVAC systems, to perform a variety of relay functions, such as; transmit the higher of two input signals, lock out one pressure signal when a second signal is higher, or transmit the lower of two pressure signals.

- Uses diaphragm-logic technology.
- In-line, wall, or panel mounted.
- Sharp-barb air connections.
- Molded plastic construction.

Applications: Pneumatic Three-port Selector Relay
Capacity: 0.039 scfm at 1 psi differential (18 mL/s at 5 kPa differential)
Air Connections: Barb fittings 5/32 in. (4 mm) O.D. plastic tubing
Mounting: Wall or In-line or panel
Operating Humidity Range (% RH): 5 to 95% RH

Dimensions: 1 1/2 in. diameter x 1 in. deep (38 mm diameter x 25 mm deep)
Temperature Range: 0°F to 140°F (-18°C to +60°C)
Maximum Safe Operating Pressure (psi): 30 psi, maximum
Maximum Safe Operating Pressure (kPa): 205 kPa, maximum

RP470A Higher-of-Two Pressures Application

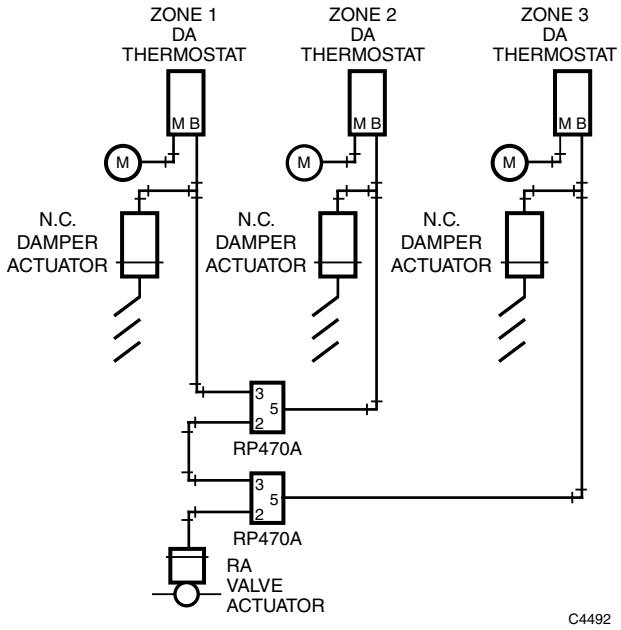

Material Number	Operation	Pressure Range (psi)	Pressure Range (kPa)	Includes
RP470A1003/U	Higher-of-two-pressures selector relay	Input Operating – 0 to 20 psi	Input Operating – 0 to 138 kPa	1 1/2 in. Mounting Clip for Mounting relay to wall or panel
RP470B1001/U	Lockout, Lower-of-two pressures, repeater relay	Input Operating – 0 to 20 psi	Input Operating – 0 to 138 kPa	1 1/2 in. Mounting Clip for Mounting relay to wall or panel

RP471 Snap Acting Pneumatic Relay

The four port, snap acting relay, converts a proportional air pressure change, from a controller to a positive (two-position) pressure change. It can also divert a supply line to one of two branches.

- Manually adjustable switching pressure.
- Sharp barb connections for 5/32 inch (4 mm) O.D. plastic tubing.
- Molded plastic construction with neoprene diaphragms and stainless steel lever.
- Mounts in any position with mounting clip.

Applications: Pneumatic, four-port, snap acting relay
Capacity: 0.039 scfm at 1 psi differential (18 mL/s at 5 kPa differential)
Air Connections: Barb fittings 5/32 in. (4 mm) O.D. plastic tubing
Mounting: Wall or Panel
Nominal Switch Differential (psi): 0.5 psi
Nominal Switch Differential (kPa): 3 kPa
Setpoint Range (psi): Adjustable between 3 to 15 psi
Setpoint Range (kPa): Adjustable between 21 to 103 kPa
Operating Humidity Range (% RH): 5 to 95% RH
Dimensions: 1 1/2 in. diameter x 2 3/4 in. deep (38 mm diameter x 70 mm deep)
Temperature Range: 0°F to 140°F (-18°C to +60°C)
Maximum Safe Operating Pressure (psi): 30 psi, maximum
Maximum Safe Operating Pressure (kPa): 205 kPa, maximum

RP471A Typical Piping

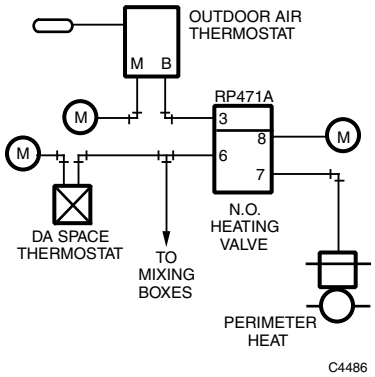

Material Number	Operation	Differential Pressure Range (psi)	Differential Pressure Range (kPa)	Includes
RP471A1002/U	Proportional to 2-position converter	1 psi maximum	7 kPa maximum	1 1/2 in. Mounting Clip for Mounting relay to wall or panel

RP670 Pneumatic Switching Relay

Pneumatic relays block, divert, or bleed pneumatic air lines when pilot pressure is changed between values. Commonly applied in Day-Night, Summer-Winter, Start-Stop, On-Off-Auto and other multiple condition systems.

- Available with either single-pole, double-throw (SPDT) or double-pole, double-throw (DPDT) switching action.
- Second switch on DPDT (RP670B) models molded in natural color for identification.
- Air connections for 5/32 in. (4 mm) O.D. plastic tubing.
- Molded plastic construction with neoprene diaphragms, stainless steel lever.
- In-line mounting, or wall or panel mounting with provided metal spring clip.

Applications: Pneumatic Switching Relay
Capacity: 0.039 scfm at 1 psi differential (18 mL/s at 5 kPa differential)
Air Connections: Barb fittings 5/32 in. (4 mm) O.D. plastic tubing
Operating Humidity Range (% RH): 5 to 95% RH
Dimensions: 1 1/2 in. diameter x 2 1/4 in. deep (38 mm diameter x 56 mm deep)

Temperature Range: 0°F to 140°F (-18°C to +60°C)
Maximum Safe Operating Pressure (psi): 30 psi, maximum
Maximum Safe Operating Pressure (kPa): 205 kPa, maximum

RP670 Typical Piping

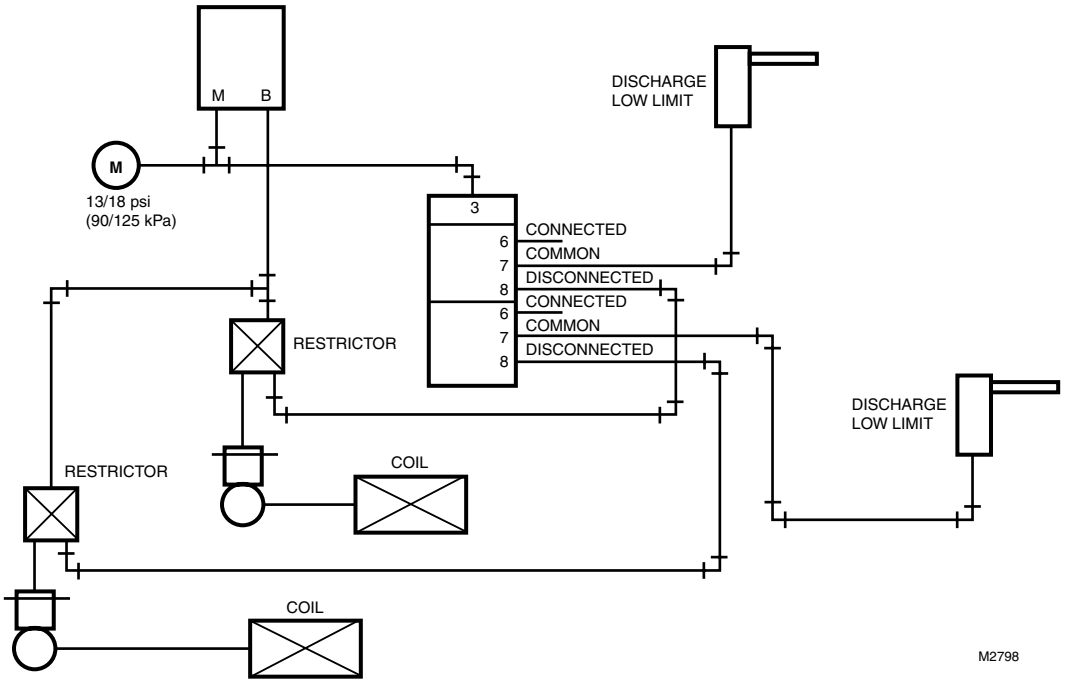

Material Number	Operation	Pressure Range (psi)	Pressure Range (kPa)	Includes
RP670A1001/U	SPDT relay	Switching Occurs Between 3 and 7 psi	Switching Occurs Between 20 and 50 kPa	1 1/2 in. Mounting Clip for Mounting relay to wall or panel
RP670A1019/U	SPDT relay	Switching Occurs Between 13 and 17 psi	Switching Occurs Between 90 and 120 kPa	1 1/2 in. Mounting Clip for Mounting relay to wall or panel
RP670B1009/U	DPDT relay	Switching Occurs Between 3 and 7 psi	Switching Occurs Between 20 and 50 kPa	1 1/2 in. Mounting Clip for Mounting relay to wall or panel
RP670B1017/U	DPDT relay	Switching Occurs Between 13 and 17 psi	Switching Occurs Between 90 and 120 kPa	1 1/2 in. Mounting Clip for Mounting relay to wall or panel
RP670B1066/U	DPDT relay	Switching Occurs Between 18 and 22 psi	Switching Occurs Between 124 and 152 kPa	1 1/2 in. Mounting Clip for Mounting relay to wall or panel
RP670B1074/U	DPDT relay	Switching Occurs Between 20 and 25 psi	Switching Occurs Between 140 and 175 kPa	1 1/2 in. Mounting Clip for Mounting relay to wall or panel

RP913 Pneumatic Load Analyzer

A diaphragm logic pressure selector selects the highest/lowest branch pressure input from zone thermostats to operate final control elements in pneumatic control applications. Replacements available for Johnson, Powers, Robertshaw, and Barber-Colman.

- Seven input manifold containing logic diaphragm, air filter, and restrictions.
- Ten sharp barb connectors for all piping requirements.
- Large integral filter assures clean air to the manifold.
- Requires no field adjustment, and plastic construction results in minimum maintenance.
- Two analyzers can be connected together to increase inputs to twelve.

RP913A Typical Piping

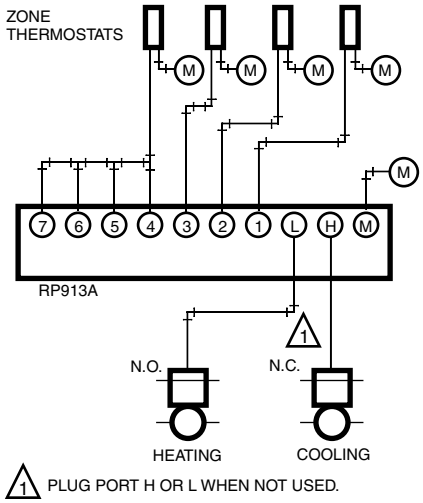

Applications: Load Analyzer Relay, 7 input
Airflow Usage: 0.04 scfm (0.019 mL/s)
Capacity: 0.039 scfm at 1 psi differential (18 mL/s at 5 kPa differential)
Air Connections: Barb fittings (10) for 1/4 in. (6 mm) O.D. plastic tubing
Mounting: Wall or In-line or panel
Operating Humidity Range (% RH): 5 to 95% RH
Dimensions: 3/4 in. high x 6 1/2 in. long x 2 1/16 in. deep (19 mm high x 165 mm long x 52 mm deep)
Temperature Range: 0°F to 140°F (-18°C to +60°C)
Maximum Safe Operating Pressure (psi): 25 psi, maximum
Maximum Safe Operating Pressure (kPa): 172 kPa, maximum

Replacement Parts
14001865-001/U – Filter Cartridge Assembly

Material Number	Operation
RP913A1008/U	Selects highest and/or lowest branch pressure input to operate final control elements

RP922 Pneumatic Potentiometer

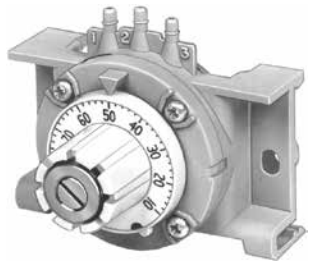

A three-port pneumatic potentiometer can sum and average two input pressures, be a flow restriction, or be an adjustable pressure supply. Replacement devices are available for Johnson, Powers, Robertshaw, Barber-Colman, and older Honeywell devices.

- High efficiency integral filters for all ports.
- High reliability, no internal moving parts.
- Compact size.
- High accuracy.

Applications: Pneumatic Averaging / Ratio Relay
Airflow Usage: Average of two input pressures
Air Connections: Barb fittings 5/32 in. (4 mm) O.D. plastic tubing
Mounting: Wall or panel or Snap onto DIN rail
Operating Humidity Range (% RH): 5 to 95% RH

Typical Wiring Diagram for RP922

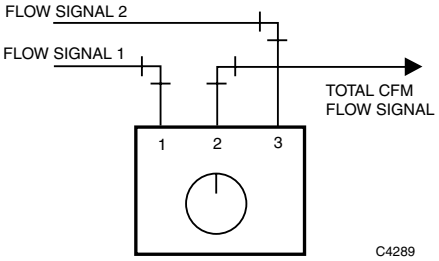

Dimensions: 2 7/16 in. wide x 1 5/8 in. deep x 2 7/8 in. high (62 mm wide x 42 mm deep x 73 mm high)
Maximum Safe Operating Pressure (psi): 30 psi, maximum
Maximum Safe Operating Pressure (kPa): 205 kPa, maximum

Material Number	Operation
RP922A1007/U	Can sum two input pressures, average two input pressures, be adjustable flow restriction or be an adjustable pressure supply.

RP970 Pneumatic Capacity Relay

Direct acting, modulating relay provides increased capacity of the branchline pressure to the final control device. Replacement devices are available for Johnson, Powers, Robertshaw, Barber-Colman, and older Honeywell devices.

- In-line, wall, or panel mounted.
- Sharp-barb air connections.
- Molded plastic construction with neoprene diaphragms.
- Mounting clip provided.

Applications: Pneumatic Capacity Relay
Product Action: Direct Acting
Airflow Usage: 0.002 scfm (1.0 mL/s) maximum
Capacity: 0.039 scfm at 1 psi differential (18 mL/s at 5 kPa differential)
Air Connections: Barb fittings, Port 1: 1/4 in. (6 mm) O.D. plastic tubing; Other Ports: 5/32 in. (4 mm) O.D. plastic tubing
Mounting: Wall or In-line or panel
Operating Humidity Range (% RH): 5 to 95% RH
Dimensions: 1 1/2 in. diameter, 1 1/2 in. deep (38 mm dia., 38 mm deep)
Temperature Range: 0°F to 140°F (-18°C to +60°C)
Maximum Safe Operating Pressure (psi): 30 psi, maximum
Maximum Safe Operating Pressure (kPa): 205 kPa, maximum

RP970 Typical Piping

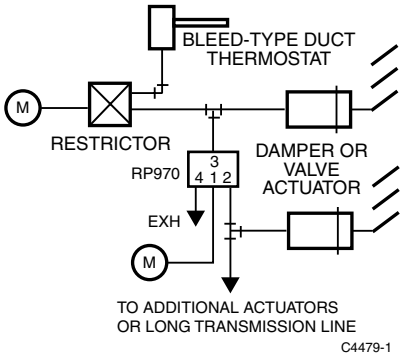

Material Number	Operation	Pressure Range (psi)	Pressure Range (kPa)	Includes
RP970A1008/U	Provides increased capacity of branchline pressure to final control device	Input Operating – 0 to 20 psi	Input Operating – 0 to 138 kPa	1 1/2 in. Mounting Clip for Mounting relay to wall or panel

RP971 Pneumatic Ratio Relay

Pneumatic relay produces a modulating pressure output, and controls pneumatic valve or damper actuators in sequence from a single thermostat. Replacements are available for Johnson, Powers, Robertshaw, Barber-Colman, and older Honeywell devices.

- Adjustable pilot start point pressures.
- Two pilot pressure spans available.
- Four sharp-barb air connections.
- Molded plastic construction with neoprene.
- Mounting clip provided.

Applications: Pneumatic, Four Port Ratio Relay
Product Action: Direct Acting
Airflow Usage: 0.002 scfm (1.0 mL/s) maximum
Capacity: 0.039 scfm at 1 psi differential (18 mL/s at 5 kPa differential)
Air Connections: Barb fittings, Port 1: 1/4 in. (6 mm) O.D. plastic tubing; Other Ports: 5/32 in. (4 mm) O.D. plastic tubing
Mounting: Wall or In-line or panel
Operating Humidity Range (% RH): 5 to 95% RH
Dimensions: 2 in. diameter x 2 5/8 in. deep (52 mm dia. x 67 mm deep)
Temperature Range: 0°F to 140°F (-18°C to +60°C)
Pilot Start Pressure (psi): Adjustable 0 to 10 psi
Pilot Start Pressure (kPa): Adjustable 0 to 69 kPa
Maximum Safe Operating Pressure (psi): 30 psi, maximum
Maximum Safe Operating Pressure (kPa): 205 kPa, maximum

RP971A Typical Piping

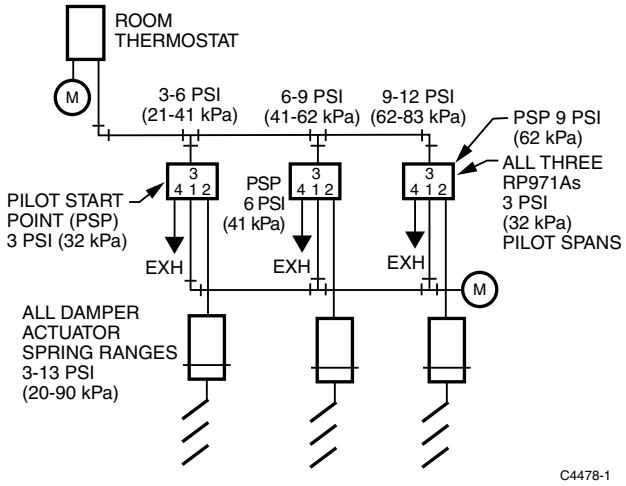

Material Number	Operation	Pressure Range (psi)	Pressure Range (kPa)	Includes
RP971A1007/U	Produces modulating pressure output proportional to pilot pressure input changes	Output Span – 3 to 13 psi; 3 psi pilot input span	Output Span – 21 to 90 kPa; 21 kPa pilot input span	14003030-002 Mounting Clip and scaleplate with psi markings
RP971A1015/U	Produces modulating pressure output proportional to pilot pressure input changes	Output Span – 3 to 13 psi; 5 psi pilot input span	Output Span – 21 to 90 kPa; 34 kPa pilot input span	14003030-002 Mounting Clip and scaleplate with psi markings
RP971A1023/U	Produces modulating pressure output proportional to pilot pressure input changes	Output Span – 3 to 13 psi	Output Span – 21 to 90 kPa	14003030-002 Mounting Clip and scaleplate with kPa markings
RP971A1031/U	Produces modulating pressure output proportional to pilot pressure input changes	Output Span – 3 to 13 psi	Output Span – 21 to 90 kPa	14003030-002 Mounting Clip and scaleplate with kPa markings

RP972 Pneumatic Reversing Relay

RP972A Typical Piping

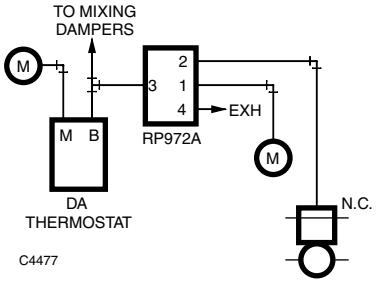

RP972 is a modulating relay suitable for all types of heating and air conditioning control systems, to reverse and increase the capacity of branchline pressure to an element. The output varies inversely with the input with an adjustable offset.

- Reverse acting.
- In-line mounting or can be wall or panel mounted with mounting clip provided.
- Molded plastic construction with neoprene diaphragms.

Applications: Pneumatic Reversing Relay
Product Action: Reverse Acting
Airflow Usage: 0.002 scfm (1.0 mL/s) maximum
Capacity: 0.039 scfm at 1 psi differential (18 mL/s at 5 kPa differential)
Air Connections: Barb fittings for three 5/32 in. (4 mm) and one 1/4 in. (6 mm) O.D. plastic tubing
Mounting: Wall or In-line or panel
Operating Humidity Range (% RH): 5 to 95% RH
Dimensions: 1 1/2 in. diameter x 2 1/4 in. deep (38 mm diameter x 57 mm deep)
Temperature Range: 0°F to 140°F (-18°C to +60°C)
Maximum Safe Operating Pressure (psi): 30 psi, maximum
Maximum Safe Operating Pressure (kPa): 205 kPa, maximum

Material Number	Operation	Includes
RP972A1006/U	Output varies inversely with input with an adjustable offset	1 1/2 in. Mounting Clip for Mounting relay to wall or panel

RP973 Pneumatic Averaging Relay

A three-port relay averages the signals from two thermostats to control a single device such as a heating coil valve for a multizone unit. Replacements available for Johnson, Powers, Robertshaw, Barber-Colman, and older Honeywell models.

- In-line, wall or panel mounted.
- Sharp-barb air connections.
- Molded plastic construction.

Applications: Pneumatic Three-Port Averaging Relay
Airflow Usage: 0.007 scfm (3.303 mL/s) maximum
Capacity: 0.039 scfm at 1 psi differential (18 mL/s at 5 kPa differential)
Air Connections: Barb fittings 5/32 in. (4 mm) O.D. plastic tubing
Mounting: Wall or In-line or panel
Operating Humidity Range (% RH): 5 to 95% RH

Dimensions: 1 1/2 in. high x 7/8 in. wide x 15/16 in. deep (38 mm high x 22 mm wide x 24 mm deep)
Temperature Range: 32°F to 125°F (0°C to 52°C)
Maximum Safe Operating Pressure (psi): 30 psi, maximum
Maximum Safe Operating Pressure (kPa): 205 kPa, maximum

Typical Averaging Application

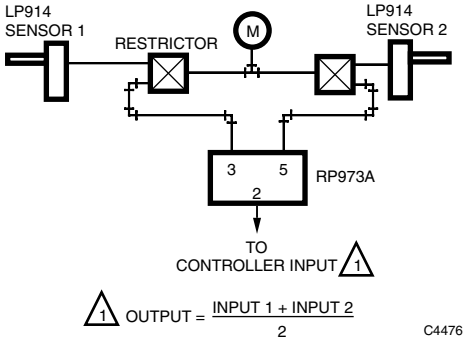

RP973A Typical Piping

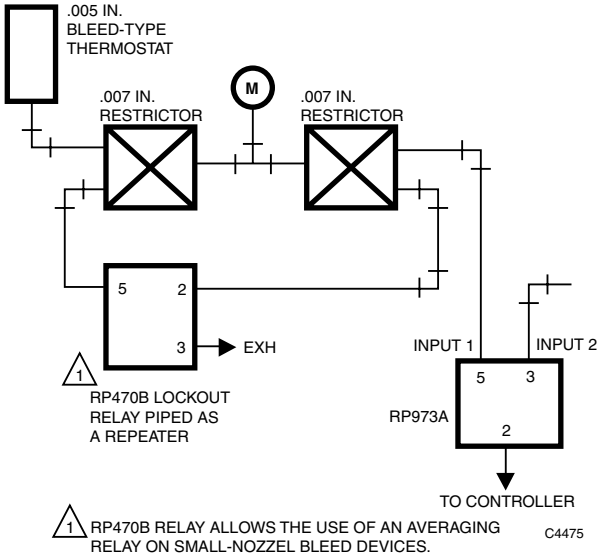

Material Number	Operation	Pressure Range (psi)	Pressure Range (kPa)
RP973A1005/U	Output pressure equals average of two input pressures	Input Operating – 3 to 15 psi; Output Operating – 3 to 15 psi	Input Operating – 21 to 103 kPa; Output Operating – 21 to 103 kPa

RP975 Pneumatic Hesitation Relay

A three-port hesitation relay provides minimum outside air damper position plus controlled ventilation for large volume unit ventilators. Replacement devices are available for Johnson, Powers, and Barber-Colman devices.

- Manually adjustable minimum position. In-line, wall or panel mounted.
- Sharp-barb air connections.
- Molded plastic construction.

Applications: Pneumatic Three-Port Hesitation relay
Airflow Usage: 0.022 scfm (10 mL/s)
Capacity: 0.003 scfm (1.65 mL/s)
Air Connections: Barb fittings 5/32 in. (4 mm) O.D. plastic tubing
Mounting: Wall or In-line or panel
Operating Humidity Range (% RH): 5 to 95% RH
Dimensions: 2 1/4 in. high x 2 1/2 in. wide x 3 3/4 in. deep (57 mm high x 63 mm wide x 96 mm deep)
Temperature Range: 32°F to 125°F (0°C to 52°C)
Maximum Safe Operating Pressure (psi): 30 psi, maximum
Maximum Safe Operating Pressure (kPa): 205 kPa, maximum
Comments: Knob has two (2) internal breakaway stops that limit rotation to 188 degrees. Each stop, when removed, adds 56 degrees of rotation. Maximum rotation is 300 degrees.

Typical Piping With Isolation Circuit

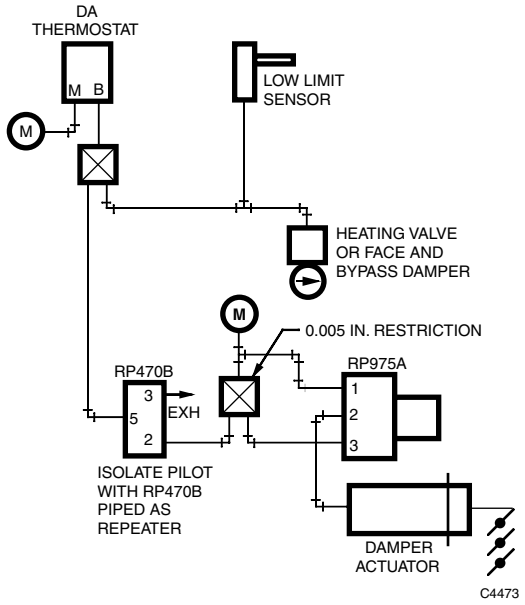

Material Number	Operation	Includes
RP975A1003/U	Provides minimum outside air damper position	1 1/2 in. Mounting Clip for mounting relay to wall or panel. Also includes scaleplate and knob, factory mounted and calibrated. Use with MP909 or MP918 Damper Actuator having a 7 to 13 psi (50 to 90 kPa) spring range

Pneumatic Relay Accessories and Replacement Parts

Material Number	Description	Includes	Used With
14001865-001/U	Filter Cartridge Assembly		RP913
14003638-001/U	Bag Assembly, Mounting Hardware for RP418	Mounting bracket, barb fitting, screens, tube, instructions 95-6046	RP418

CLEPAS Air Pressure Switch

Senses differential air pressure in HVAC systems and provides on/off output. A typical application is sensing fan shutdown in a unit ventilator to close the outdoor air damper.

- Reliable pneumatic operation.
- Adjustable setpoint (switching pressure).
- Eliminates electrical interlock wiring.

Applications: Pneumatic Airflow Differential Pressure Switch
Air Connections: Sensing Inputs: 1/4 in. compression fittings; Control Air: Barb for 1/4 in. (6 mm) or 3/8 in. (10 mm) O.D. plastic tubing
Mounting: Vertical Mount

Dimensions: 6 1/8 in. high x 4 1/8 in. wide x 2 13/16 in. deep (156 mm high x 105 mm wide x 72 mm deep)
Temperature Range: 0°F to 135°F (-18°C to +57°C)
Switch Type: On/Off Pneumatic Airflow Switch
Switching Action: On/Off

Material Number	Description	Pressure Range (psi)	Pressure Range (kPa)
CLEPAS2100/U	Pneumatic Airflow Differential Pressure Switch, Low Setpoint Range	Switching Pressure – 0.15 to 12.0 in. w.c.; 0.15 to 2.0 in. w.c.	Switching Pressure – 0.037 to 2.99 kPa; 0.037 to 0.50 kPa
CLEPAS2200/U	Pneumatic Airflow Differential Pressure Switch, High Setpoint Range	Switching Pressure – 0.15 to 12.0 in. w.c.	Switching Pressure – 0.037 to 2.99 kPa

P643 Pneumatic/Electric Switch

Converts a pneumatic signal from a controller to an electrical switching action to provide start and stop control. Replacement devices available for Johnson, Powers, Robertshaw, Barber-Colman, and older Honeywell pneumatic/electric switches.

- Adjustable differential.
- Externally visible scales.
- Heavy-duty switch.
- Integral gage connection.

Applications: Pneumatic / Electric Switch
Air Connections: Compression fitting 1/4 in. (6 mm) O.D. tubing
Voltage: 120 Vac; 208 Vac; 240 Vac; 277 Vac; 480 Vac
Frequency: 50 Hz; 60 Hz
Mounting: Holes in back of case
Dimensions: 7 1/32 in. high x 3 13/16 in. wide x 2 3/4 in. deep (179 mm high x 97 mm wide x 70 mm deep)
Temperature Range: -30°F to +125°F (-34°C to +52°C)
Maximum Safe Operating Pressure (psi): 25 psi, maximum

Maximum Safe Operating Pressure (kPa): 170 kPa, maximum
Current: 120 Vac: 8.0 AFL, 48.0 LRA, 17.0 A resistive, 208/240 Vac: 5.1 AFL, 30.6 ALR, 17.0 A resistive, 270 Vac: 17.0 A resistive, 480 Vac: 3.5 AFL, 21.0 ALR, 10.0 A resistive
Switch Type: Pneumatic/Electric Switch
Switch Operation: Converts pneumatic signal to electrical switching action
Approvals, Underwriters Laboratories Inc: Listed SDFY
Approvals, Canadian Underwriters Laboratories Inc: Listed

Dimensions Diagram in inches (millimeters)

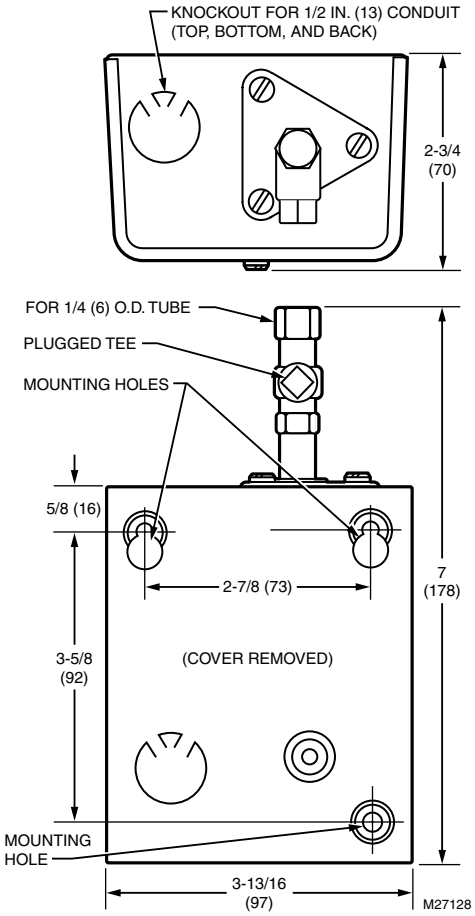

P643A Typical Piping

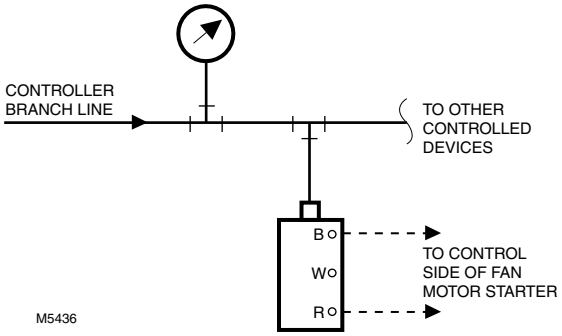

Material Number	Electrical Connections	Pressure Range (psi)	Pressure Range (kPa)	Differential Pressure Range (psi)	Differential Pressure Range (kPa)	Includes
P643A1007/U	Knockouts (3) for 1/2 in. conduit	Switching Pressure – 0 to 22.5 psi	Switching Pressure – 0 to 155 kPa	3 to 13 psi adjustable	20 to 90 kPa adjustable	SPDT switch

P658 Pneumatic/Electric Switch

Pneumatic-electric switches convert a controller's pneumatic signal to electrical switching, providing start and stop control. Replacements available for Johnson, Powers, Robertshaw, Barber-Colman, and older Honeywell pneumatic/ electric switches.

- Models available for surface or panel mounting.
- Barb protected by open cage.
- All ferrous parts plated to prevent corrosion.
- Factory calibrated setpoint field adjustable to meet job requirements.
- Neoprene diaphragm element.

Applications: Pneumatic / Electric Switch
Air Connections: Barb fitting for 1/4 in. (6 mm) O.D. plastic tubing
Electrical Connections: P658A, B: Screw terminals
P658E, F: 1/4 in. quick-connect male terminals
Frequency: 60 Hz
Operating Humidity Range (% RH): 5 to 95% RH, 80°F (27°C) max wet bulb
Operating Temperature Range: P658A: -20 to 140°F (-4 to 60°C)
P658B: -20 to 160°F (-4 to 71°C)
P658E, F: 40 to 140°F (4 to 60°C)
Maximum Safe Operating Pressure (psi): 30 psi, maximum
Maximum Safe Operating Pressure (kPa): 207 kPa, maximum
Switch Type: Pneumatic/Electric Switch

Switching Action: P658A, B: Make R-W on pressure rise to setpoint plus differential; Make R-B on pressure fall to setpoint. P658E, F: Make COM-NC on pressure fall to setpoint; Make COM-NO on pressure rise to setpoint plus differential
Switch Operation: Converts pneumatic signal to electrical switching action (SPDT)
Approvals: P658A:
UL Listing, Category SDYF
CSA Listing, Volume II
P658B:
UL File No. E49725, Category SDFY2
P658E, F:
UL File No. E49725, Category SDFY2
CSA Listing, Volume I

Material Number	Mounting	Setpoint Range	Differential Pressure Range (psi)	Differential Pressure Range (kPa)	Motor Load	Pilot Duty Ratings	Resistive Load	Includes	Comments
P658A1013/U	Surface (includes case)	Field Adjustable – 2 to 24 psi (14 to 165 kPa)	2 psi	14 kPa	1 hp @ 125 Vac, 2 hp @ 250 or 277 Vac	750 VA @ 125, 250 or 277 Vac	25A @ 125, 250 or 480 Vac	Case	Factory Calibrated at 10 psi
P658B1012/U	Panel mount	Field Adjustable – 2 to 24 psi (14 to 165 kPa)	2 psi	14 kPa	1 hp @ 125 Vac, 2 hp @ 250 or 277 Vac	750 VA @ 125, 250 or 277 Vac	25A @ 125, 250 or 480 Vac		Factory Calibrated at 10 psi
P658E1001/U	Panel mount	Field Adjustable – 2 to 17 psi (14 to 117 kPa)	1 psi	7 kPa	3/4 hp @ 125, 250 or 277 Vac	720 VA @ 125, 250 or 277 Vac	25A @ 125, 250 or 277 Vac; 10A @ 480 Vac		No Factory Calibration
P658E1167/U	Panel mount	Field Adjustable – 2 to 25 psi (14 to 172 kPa)	1 psi	7 kPa	3/4 hp @ 125, 250 or 277 Vac	720 VA @ 125, 250 or 277 Vac	25A @ 125, 250 or 277 Vac; 10A @ 480 Vac		No Factory Calibration
P658F1000/U	Panel, through double D hole secured with hex nut	Field Adjustable – 2 to 17 psi (14 to 117 kPa)	1 psi	7 kPa	3/4 hp @ 125, 250 or 277 Vac	720 VA @ 125, 250 or 277 Vac	25A @ 125, 250 or 277 Vac; 10A @ 480 Vac		No Factory Calibration

P658A Dimensions Diagram in inches (millimeters)

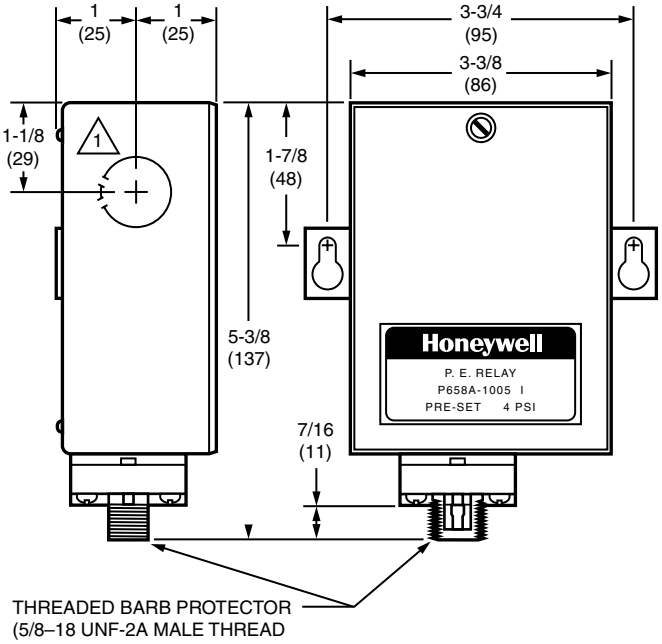

1 KNOCKOUT ON ONE SIDE FOR 3/4 1NCH CONDUIT. KNOCKOUTS ON OPPOSITE SIDE, TOP, AND BACK FOR 1/2 INCH CONDUIT.

C7435

P658E Dimensions Diagram in inches (millimeters)

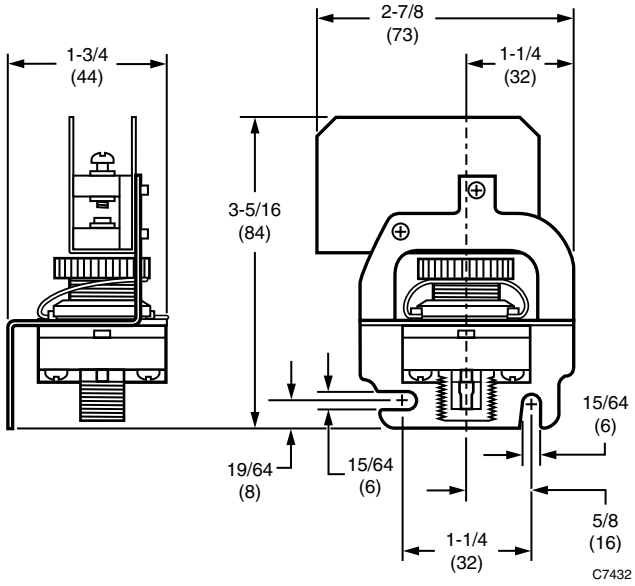

P658B Dimensions Diagram in inches (millimeters)

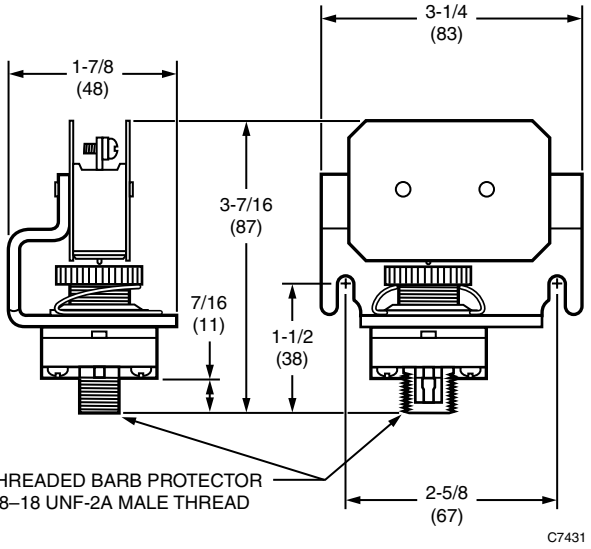

P658F Dimensions Diagram in inches (millimeters)

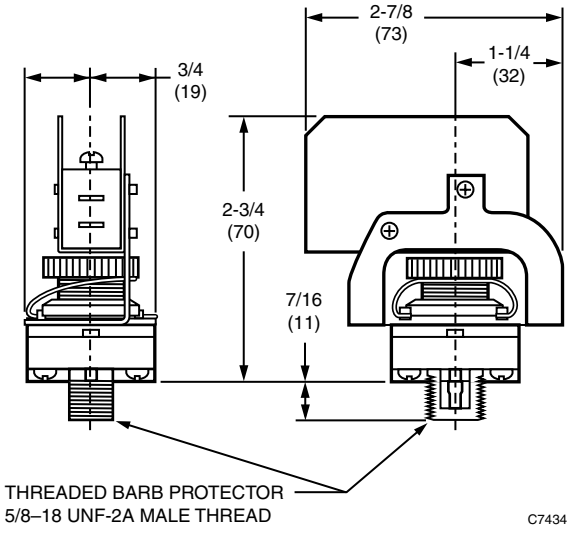

SP470 Pneumatic Diverting Switches

Pneumatic diverting switch used to manually divert, block, or bleed air in pneumatic air lines with a change in conditions. Replacement kits are available for Johnson, Powers, Robertshaw, Barber-Colman, and older Honeywell switches.

- Available in two-position or three-position devices.
- Mountable on a panel up to 7/16 in. (11 mm) thick.
- Complete with knob and scaleplate.

Applications: Pneumatic Manual Switch
Airflow Usage: 0.175 scfm (82.6 mL/s) minimum at 1 psi pressure drop
Air Connections: Barb fitting for 5/32 in. (4 mm) O.D. plastic tubing
Mounting: Panel mount
Operating Humidity Range (% RH): 5 to 95% RH
Dimensions: 1 5/8 in. high x 1 9/16 in. wide x 3 in. deep (41 mm high x 40 mm wide x 76 mm deep)

Temperature Range: 20°F to 140°F (-7°C to +60°C)
Maximum Safe Operating Pressure (psi): 30 psi, maximum
Maximum Safe Operating Pressure (kPa): 207 kPa, maximum
Switch Operation: Used to manually divert, block or bleed pneumatic air lines

SP470A Switches

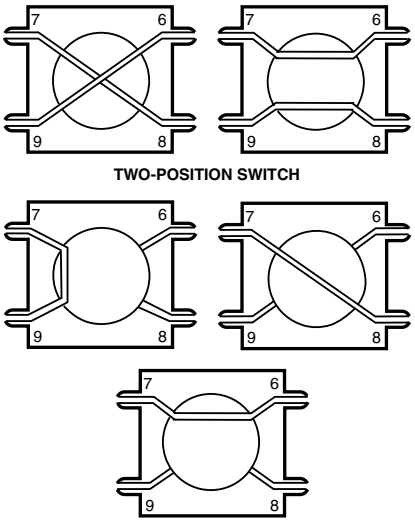

C1887

SP470A Typical three-position application

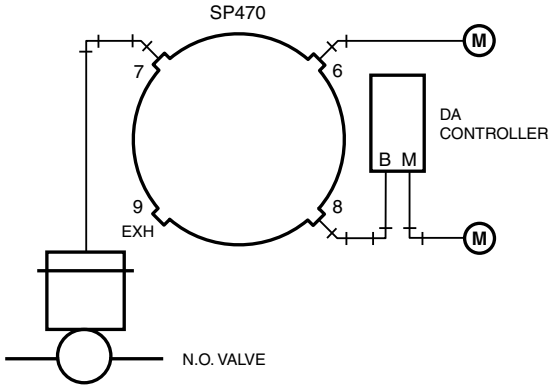

NOTES:
POSITION 1, VALVES OPEN: PORTS 7 AND 9 CONNECTED, PORTS 6 AND 8 BLOCKED
POSITION 2, VALVE AUTO: PORTS 7 AND 8 CONNECTED, PORTS 6 AND 9 BLOCKED
POSITION 3, VALVE CLOSED: PORTS 7 AND 6 CONNECTED, PORTS 8 AND 9 BLOCKED

C4290

Dimensions Diagram in inches (millimeters)

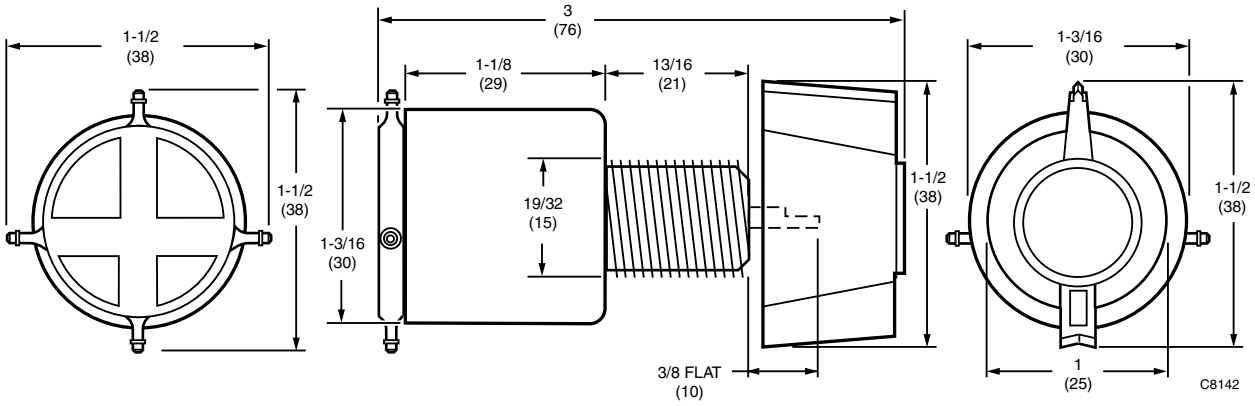

C8142

Material Number	Description	Switch Type	Includes
SP470A1000/U	Pneumatic Manual Switch, 4 port, 2-position interchange	Two or Three Position Pneumatic Diverting Switch	Mounting nuts, knob, and two-position scaleplate
SP470A1018/U	Pneumatic Manual Switch, 4 port, 3-position, Port 7 is common	Three Position Pneumatic Diverting Switch	Mounting nuts, knob, and three-position scaleplate

SP970 Pneumatic Manual or Minimum Position Switches

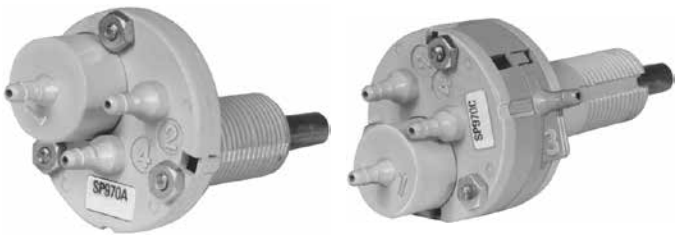

Manually position a remote damper actuator or reset the setpoint of a pneumatic controller. They can also provide minimum damper position. Replacement kits are available for Johnson, Powers, Robertshaw, Barber-Colman, and older Honeywell switches.

- Two spans available as shipped. Six spans with breakaway stops on knob.
- Pilot bleed and isolated pilot models available.
- Wall or panel mounting.

Applications: Manual Pressure Regulator
Airflow Usage: 0.022 scfm (9.8 mL/s)
Air Connections: Barb fitting for 5/32 in. (4 mm) O.D. plastic tubing
Mounting: Panel or Wall
Operating Humidity Range (% RH): 5 to 95% RH
Dimensions: 1 1/2 in. diameter x 3 in. deep (38 mm diameter x 76 mm deep)
Temperature Range: 0°F to 140°F (-18°C to +60°C)

Maximum Safe Operating Pressure (psi): 30 psi, maximum
Maximum Safe Operating Pressure (kPa): 207 kPa, maximum
Switch Operation: Used to manually position a remote damper actuator or reset setpoint of pneumatic controller
Comments: The setpoint knob normally rotates 188 degrees. Two breakaway stops on the knob allow rotation of 244 degrees and 300 degrees.

Dimensions Diagram in inches (millimeters)

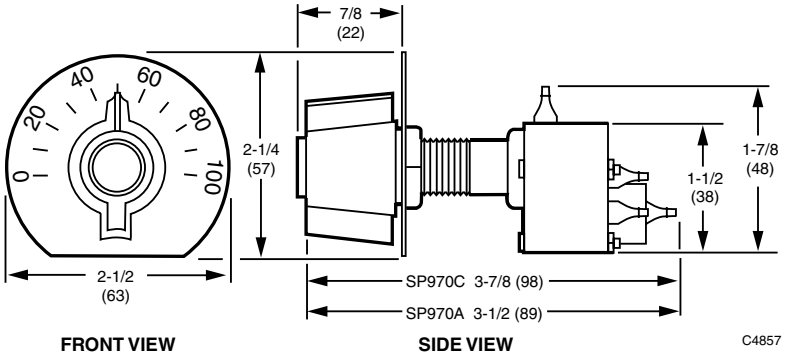

Material Number	Capacity	Pressure Range (psi)	Pressure Range (kPa)	Switch Type	Includes
SP970A1005/U	0.021 scfm (9.4 mL/s) below minimum position. Above minimum position, device feeding pilot determines capacity	Output Span – 10 psi with 188 degree knob rotation, 13 psi with 244 degree knob rotation, and 16 psi with 300 degree knob rotation	Output Span – 69 kPa with 188 degree knob rotation, 90 kPa with 244 degree knob rotation, and 110 kPa with 300 degree knob rotation	Three-port pneumatic manual or minimum position switch	Knob, 0 to 100% scale plate and locknuts
SP970A1013/U	0.021 scfm (9.4 mL/s) below minimum position. Above minimum position, device feeding pilot determines capacity	Output Span – 5 psi with 188 degree knob rotation, 6.5 psi with 244 degree knob rotation and 8 psi with 300 degree knob rotation	Output Span – 34 kPa with 188 degree knob rotation, 45 kPa with 244 degree knob rotation, and 56 kPa with 300 degree knob rotation	Three-port pneumatic manual or minimum position switch	Knob, 0 to 100% scale plate and locknuts
SP970C1001/U	0.021 scfm (9.4 mL/s)	Output Span – 10 psi with 188 degree knob rotation, 13 psi with 244 degree knob rotation, 16 psi with 300 degree knob rotation	Output Span – 69 kPa with 188 degree knob rotation, 90 kPa with 244 degree knob rotation, and 110 kPa with 300 degree knob rotation	Four-port pneumatic manual switch with isolated pilot chamber	Knob, 0 to 100% scale plate and locknuts
SP970C1043/U	0.021 scfm (9.4 mL/s)	Output Span – 5 psi with 188 degree knob rotation, 6.5 psi with 244 degree knob rotation and 8 psi with 300 degree knob rotation	Output Span – 34 kPa with 188 degree knob rotation, 45 kPa with 244 degree knob rotation, and 56 kPa with 300 degree knob rotation	Four-port pneumatic manual switch with isolated pilot chamber	Knob, 0 to 100% scale plate and locknuts

Pneumatic Switch Replacement Parts

Material Number	Description	Used With
14003199-002/U	Electric / Pneumatic Relay, Surface Mount	SP470A

SP970 Operation

SP970 Typical Piping

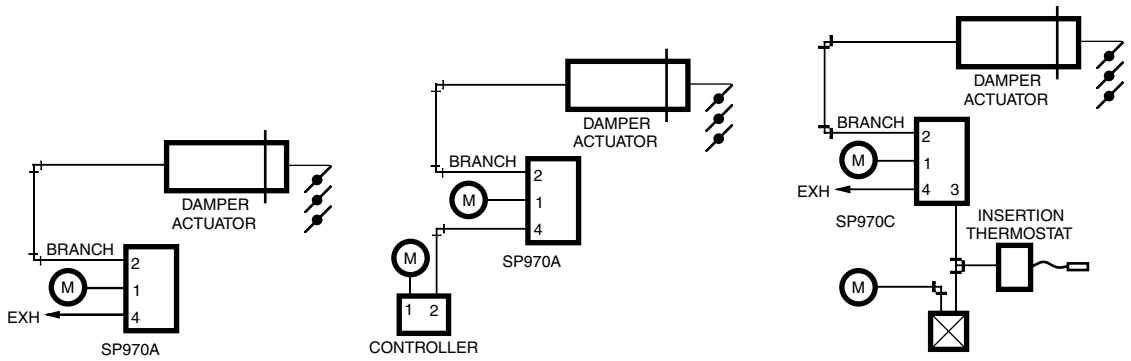

A. MANUAL POSITION APPLICATION

B. MINIMUM POSITION APPLICATION WITH CONTROLLER INPUT

C. MINIMUM POSITION APPLICATION WITH BLEED TYPE THERMOSTAT INPUT (LP916)

C4471A

Operation

SP970A Three-Port Switches

Pressure Regulator Operation

Main line airflows through the restriction into the branchline chamber and out the nozzle. Branchline pressure increases until it is strong enough to compress the spring and lift the diaphragm off the nozzle. Airflow out the nozzle is controlled by the balance between the branchline pressure and spring force. See Typical Piping Diagram A Above.

Minimum Position Operation

See Typical Piping Diagram B above. An external signal is connected to Port 4 (Exhaust Port). When the external signal is greater than the spring load, the nozzle opens and branchline pressure is the same as the external signal. When the external signal is less than the spring load, branchline pressure is controlled as described above. See Operation Diagram below.

SP970A Operation

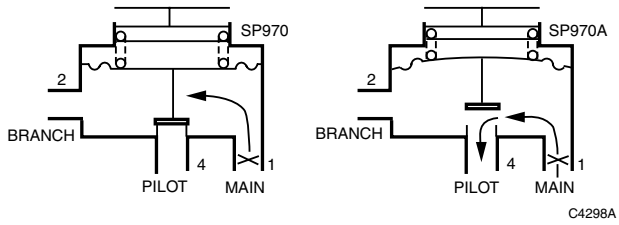

C4298A

SP970C Four-Port Switches

These minimum position devices have a separate dead-ended chamber connected to Port 3 to receive an external signal. When the external signal is less than the spring load, the signal has no effect and functions similar to the SP970A as a pressure regulator. When the external signal is greater than the spring load, the spring load is isolated and the device duplicates the input signal. See Operation Diagram below.

Piping Diagram C above shows a typical four-port SP970C application. The minimum-position switch keeps the pneumatic actuator at a minimum position until the thermostat pressure is greater than the minimum position valves. The thermostat then controls the actuator.

SP970C Operation

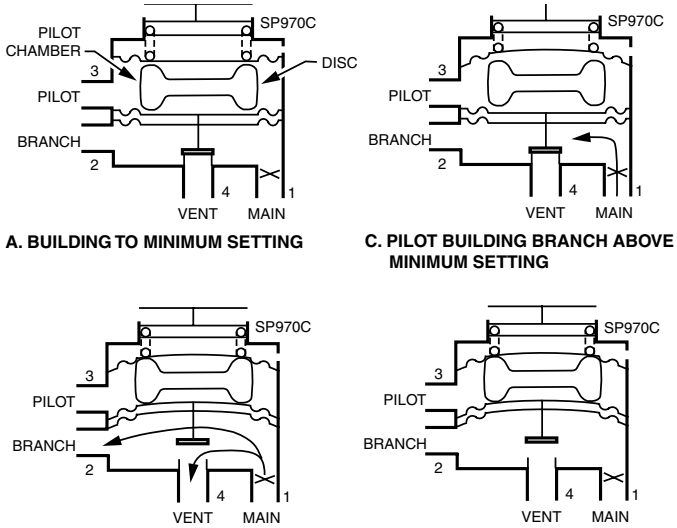

A. BUILDING TO MINIMUM SETTING

C. PILOT BUILDING BRANCH ABOVE MINIMUM SETTING

B. BALANCED AT MINIMUM SETTING

D. BALANCED AGAINST PILOT

C4300A

Pneumatic Damper Actuator Torque Ratings

TORQUE (LB-IN.) DELIVERED TO A 90-DEGREE STROKE DAMPER SHAFT:

Actuator	Spring Range Psi (kPa)	Stroke in. (mm)	Delivered Torque lb-in. (N•m)				
			Shaft Retracted	Midstroke[a]	Shaft Extended		
					13 psi (90 kPa) main	18 psi (129 kPa) main	20 psi (138 kPa) main
MP913	10-15 (69-103) 5-10 (34-69)	1 (25) 1 (25)	11 (1.243) 6 (0.678)	2 (0.226) 2 (0.226)	0 (0) 3 (0.339)	3 (3.339) 9 (1.017)	5 (0.565) 13 (1.469)
MP916	3-12 (21-83) 4-8 (27-55) 5-12 (34-83)	2-1/4 (57) 2-1/4 (57) 2-1/4 (57)	41 (4.632) 51 (6.214) 69 (7.796)	26 (2.937) 26 (2.937) 26 (2.937)	14 (1.582) 69 (7.796) 14 (1.582)	138 (15.6) 138 (15.6) 82 (9.264)	109 (12.315) 166 (18.755) 109 (12.315)
MP909D	3-8 (21-55) 5-10 (34-70) 8-13 (55-90) 5-10 (34-70)	2-3/8 (60) 2-3/8 (60) 2-3/8 (60) 3 (76)	10.7 (1.209) 17.9 (1.98) 28.6 (3.232) 22.5 (2.543)	7.6 (0.859) 7.6 (0.859) 7.6 (0.859) 9.5 (1.974)	17.9 (2.023) 10.7 (1.209) 0 (0) 13.5 (1.526)	35.7 (4.034) 28.6 (3.232) 17.9 (2.023) 36 (4.008)	42.8 (4.836) 35.7 (4.034) 25.0 (2.825) 45 (5.085)
MP909E	2.5-6.5 (17-45) 3-13 (21-90) 5-10 (34-70) 5-10 (34-70) 9-13 (62-90)	3.1 (79) 4 (101) 4 (101) 3.1 (79) 3.1 (79)	25.6 (2.893) 39.6 (4.475) 66 (7.458) 51.2 (5.786) 92.1 (10.41)	22 (2.486) 28 (3.164) 28 (3.164) 22 (2.486) 22 (2.486)	66.5 (7.515) 0 (0) 39.6 (4.475) 30.7 (3.469) 0 (0)	118 (13.33) 66 (7.058) 105.6 (11.93) 81.8 (9.243) 51.2 (5.786)	138 (15.59) 92.4 (10.44) 132 (14.92) 102 (11.53) 71.7 (8.102)
MP909H	9-13 (62-90) plus positioner	3.1 (79)	92.1 (10.41)	[b]	0 (0)	66 (7.1)	92.4 (10.44)
MP918A	8-13 (55-90) plus positioner	3-1/2 (89)	333 (37.63)	[b]	0 (0)	208 (23.5)	292 (33)
MP918B	3-7 (21-49) 3-13 (21-90) 5-10 (34-70) 8-13 (55-90)	3-1/2 (89) 3-1/2 (89) 3-1/2 (89) 3-1/2 (89)	125 (14.3) 125 (14.3) 208 (23.5) 333 (37.63)	88 (9.944) 88 (9.944) 88 (9.944) 88 (9.944)	250 (28.25) 0 (0) 125 (14.3) 0 (0)	458 (51.53) 208 (23.5) 333 (37.63) 208 (23.5)	541 (61.3) 292 (33) 416 (47.01) 292 (33)
MP920	7-13 (34-90)	6 (152)	520 (58.75)	158 (17.85)	0 (0)	372 (42.03)	521 (58.86)

[a] Torque in this column is for modulating service only.
[b] The lesser of retracted or extended shaft torque.

The following reference formulas are valid for actuators mounted on fixed brackets only.

Most dampers operate through a 90-degree arc. The amount of torque that a pneumatic actuator can deliver to the damper shaft may be calculated from the net force delivered and the length of stroke of the actuator using the following equations:

$$T_R = \frac{F_R \times S}{2}$$

T_m = 1.5 x A x 0.707S
T_R = Torque with actuator shaft retracted.
T_E = Torque with actuator shaft extended.

$$T_E = \frac{F_E \times S}{2}$$

T_M = Midstroke torque.
F_R = Force exerted by actuator with shaft retracted.
F_E = Force exerted by actuator with shaft extended.
A = Effective area of actuator diaphragm.
S = Actuator stroke.

The midstroke is significant only for modulating service and is based on the premise that an input pressure change no greater than 1.5 psi (10 kPa) should cause the actuator to reposition the damper.

MP516 Pneumatic Unit Ventilator Damper Actuator

Used to control the damper on unit ventilators. Can be adapted to various unit ventilator control cycles. Replacement devices are available for Johnson, Powers, Robertshaw, Barber-Colman, and older Honeywell unit ventilator damper actuators.

- Constructed of strong zinc die castings.
- Hesitation feature available for unit ventilator cycles requiring a minimum percentage of outdoor air.

Actuator Type: Damper
Actuator Force (kPa): Medium
Stroke: 2-1/8 in. to 2-1/2 in. (54 mm to 63 mm)
Diaphragm Effective Area (sq in.): 11 sq in.
Diaphragm Effective Area (sq cm): 71 sq cm
Maximum Safe Operating Pressure (psi): 25 psi
Maximum Safe Operating Pressure (kPa): 172 kPa
Temperature Range: -20°F to +160°F (-29°C to +71°C)
Fail Safe Mode: Spring Return
Air Connections: 1/8 in. NPT
Operating Humidity Range (% RH): 5 to 95% RH
Dimensions: 5 1/8 in. high x 6 7/8 in. wide (with arm) (130 mm high x 175 mm wide (with arm))

Accessories

26025B/U – Damper crank arm, for 3/8 in. (9.5 mm) diameter axles, includes an elongated slot, scaled at 40-50-60-75-90 degrees
27174B/U – Damper crank arm, for 7/16 inch (11.1 mm) diameter axles, includes an elongated slot, scaled at 40-50-60-75-90 degrees
309389J/U – Mounting bracket and linkage is used in MP516 damper actuators
312867C/U – Damper crank arm, for 1/2 in. (12.7 mm) diameter axles, includes an elongated slot, scaled at 45-60-75-90 degrees
315321/U – Crank arm ball joint, with 1/4 male threads, accepts 5-16 inch push rods

Dimensions Diagram in inches (millimeters)

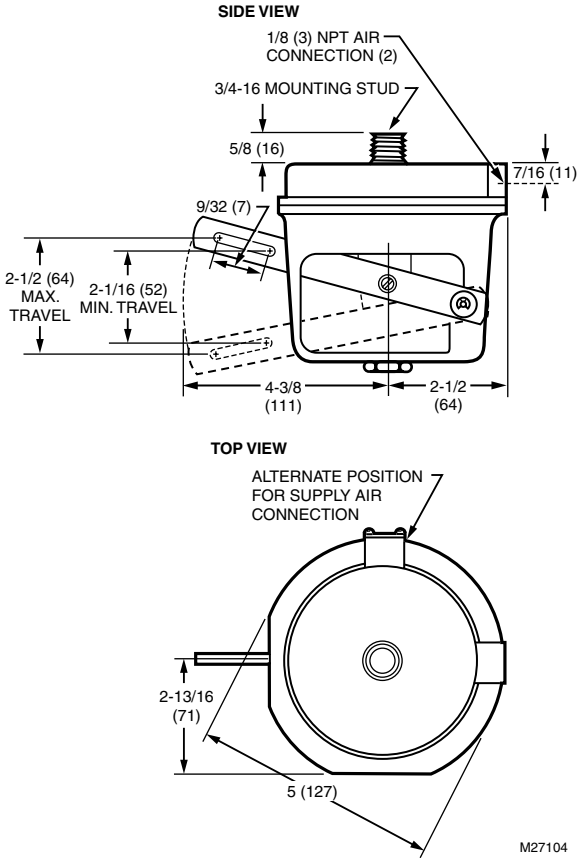

MP516A Typical Piping

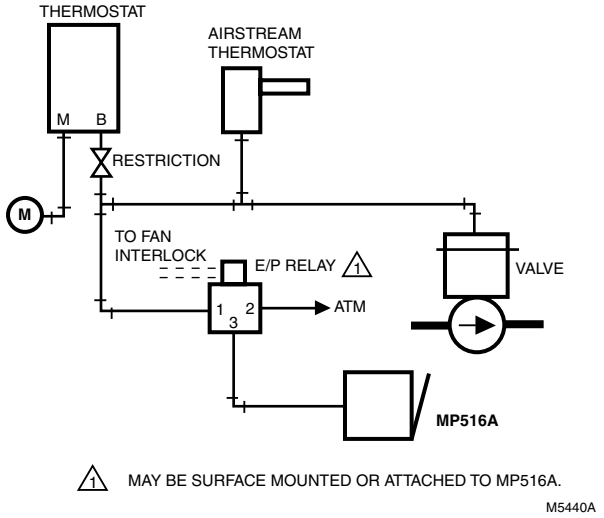

Material Number	Spring Range (psi)	Spring Range (kPa)	Comments
MP516A1087/U	3 psi to 12 psi	21 kPa to 83 kPa	The lever arm moves to the desired minimum position as air pressure increases from 0 to 3 psi, hesitates from 3 to 8 psi, and completes its stroke from 8-12 psi.
MP516A1095/U	4 psi to 8 psi	28 kPa to 55 kPa	No hesitation.
MP516A1103/U	5 psi to 12 psi	34 kPa to 83 kPa	No hesitation.

MP909D Pneumatic Damper Actuator

MP909D is used for pneumatic proportional control of variable volume terminal units and small dampers. Available in various operating ranges, for either individual or sequence operation with other actuators. Compatible with all competitors products.

- Rugged ribbed aluminum body.
- Low-friction shaft bearing.
- Close tolerance on operating range and stroke.
- Protected barb connector.
- Versatile mounting and connecting hardware options.
- Positive leakproof seal.

Actuator Type: Damper
Actuator Force (kPa): Low
Diaphragm Effective Area (sq in.): 3 sq in.
Diaphragm Effective Area (sq cm): 19.4 sq cm
Maximum Safe Operating Pressure (psi): 30 psi
Maximum Safe Operating Pressure (kPa): 207 kPa
Temperature Range: 50°F to 140°F (10°C to 60°C)
Fail Safe Mode: Spring Return
Operating Humidity Range (% RH): 5 to 95% RH
Dimensions: 6 5/16 in. long (add 1 in. for shaft) x 2 13/32 in. diameter (160 mm long (add 25 mm for shaft) x 61 mm diameter)
Approvals, Underwriters Laboratories Inc.: Components Recognized: Report R18118

MP909D Ball Joint Linkage

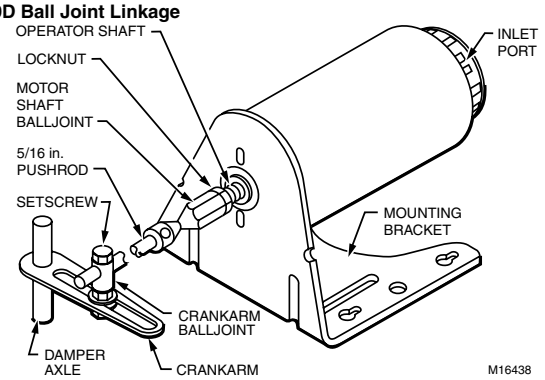

MP909D Piping Diagram

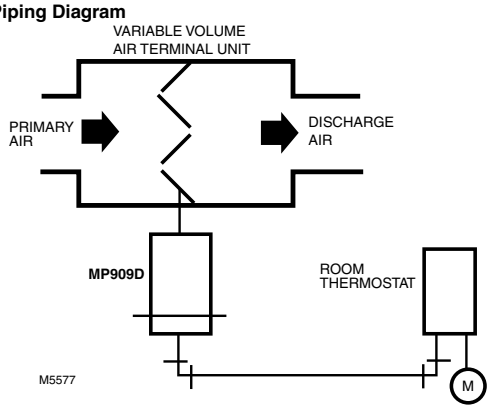

Accessories

14002850-001/U – Angle bracket, used in MP909D and E damper actuators, measures; 5-3/8 inch (137 mm) long and 5 inch (127 mm) wide
14003640-001/U – Angle bracket, used in MP909D and MP913 damper actuators, measures; 3 inch (76 mm) long, 3-3/4 inch (95 mm) wide and 2-3/4 inch (70 mm) high
26025B/U – Damper crank arm, for 3/8 in. (9.5 mm) diameter axles, includes an elongated slot, scaled at 40-50-60-75-90 degrees
27174B/U – Damper crank arm, for 7/16 inch (11.1 mm) diameter axles, includes an elongated slot, scaled at 40-50-60-75-90 degrees
312867C/U – Damper crank arm, for 1/2 in. (12.7mm) diameter axles, includes an elongated slot, scaled at 45-60-75-90 degrees
315321/U – Crank arm ball joint, with 1/4 male threads, accepts 5-16 inch push rods
315781/U – Motor shaft ball joint, with 3/8 - 16 UNC female threads, fits 5/16 inch diameter pushrods

Dimensions Diagram in inches (millimeters)

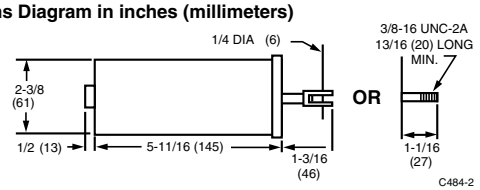

Material Number	Air Connections	Spring Range (psi)	Spring Range (kPa)	Stroke	Includes
MP909D1201/U	Barbed fitting for 3/32 in. O.D. tubing	3 psi to 8 psi	21 kPa to 55 kPa	2.4 in. (61 mm)	Actuator only. 3/8 in.-16 Threaded Shaft. No Mounting Bracket or Ball Joint
MP909D1219/U	Barbed fitting for 3/32 in. O.D. tubing	8 psi to 13 psi	55 kPa to 90 kPa	2.4 in. (61 mm)	Actuator only. 3/8 in.-16 Threaded Shaft. No Mounting Bracket or Ball Joint
MP909D1227/U	Barbed fitting for 3/32 in. O.D. tubing	5 psi to 10 psi	34 kPa to 69 kPa	2.4 in. (61 mm)	Actuator only. 3/8 in.-16 Threaded Shaft. No Mounting Bracket or Ball Joint
MP909D1318/U	Barbed fitting for 3/32 in. O.D. tubing	8 psi to 13 psi	55 kPa to 90 kPa	2.4 in. (61 mm)	14002850-001 - External Mounting Bracket with Balljoint
MP909D1334/U	Barbed fitting for 3/32 in. O.D. tubing	5 psi to 10 psi	34 kPa to 69 kPa	2.4 in. (61 mm)	14003640-001 - 90 degree Angled Mounting Bracket with Ball Joint
MP909D1367/U	Barbed fitting for 3/32 in. O.D. tubing	5 psi to 10 psi	34 kPa to 69 kPa	3 in. (76 mm)	Actuator only. 3/8 in.-16 Threaded Shaft. No Mounting Bracket or Ball Joint
MP909D1441/U	Barbed fitting for 3/32 in. O.D. tubing	5 psi to 10 psi	34 kPa to 69 kPa	3 in. (76 mm)	Small clevis on shaft. No mounting bracket or ball joint
MP909D1474/U	Barbed fitting for 1/4 in. O.D. tubing	5 psi to 10 psi	34 kPa to 69 kPa	2.4 in. (61 mm)	Actuator only. 3/8 in.-16 Threaded Shaft. No Mounting Bracket or Ball Joint
MP909D1508/U	Barbed fitting for 1/4 in. O.D. tubing	8 psi to 13 psi	55 kPa to 90 kPa	2.4 in. (61 mm)	Actuator only. 3/8 in.-16 Threaded Shaft. No Mounting Bracket or Ball Joint
MP909D1516/U	Barbed fitting for 1/4 in. O.D. tubing	5 psi to 10 psi	34 kPa to 69 kPa	2.4 in. (61 mm)	Actuator only. 3/8 in.-16 Threaded Shaft. No Mounting Bracket or Ball Joint
MP909D1524/U	Barbed fitting for 1/4 in. O.D. tubing	5 psi to 10 psi	34 kPa to 69 kPa	3 in. (76 mm)	31578 ball joint and 14003640-001 - 90 degree Angled Mounting Bracket

MP909E, H Pneumatic Damper Actuators

These actuators are used for proportional control of variable volume terminal units, mixing boxes, and small to medium sized dampers. They are available in various operating ranges for either independent operation or sequence operation with other actuators. The MP909E has an optional adjustable stroke feature. The MP909H includes a positive positioner. Replacement devices are available for Johnson, Powers, Robertshaw, Barber-Colman, and older Honeywell actuator models.

- Rolling diaphragm operated.
- Low friction shaft bearing.
- Close tolerance on operating range and stroke.
- Non-overlapping spring ranges for sequencing.
- Corrosion resistant
- Reliable long life

Actuator Type: Damper
Actuator Force (kPa): Medium
Diaphragm Effective Area (sq in.): 6.6 sq in.
Diaphragm Effective Area (sq cm): 43 sq cm
Temperature Range: -28°F to +160°F (-33°C to +71°C)
Fail Safe Mode: Spring Return
Operating Humidity Range (% RH): 5 to 95% RH
Approvals, Underwriters Laboratories Inc.: MP909E only: Components Recognized: Report R18118

Accessories

14002850-001/U – Angle bracket, used in MP909D and E damper actuators, measures; 5-3/8 inch (137 mm) long and 5 inch (127 mm) wide

14003640-001/U – Angle bracket, used in MP909D and MP913 damper actuators, measures; 3 inch (76 mm) long, 3-3/4 inch (95 mm) wide and 2-3/4 inch (70 mm) high

14004062-001/U – External trunnion mounting bracket is used for MP918A and B, or MP909E and H damper actuators

14004062-002/U – Trunnion mounting bracket, is used for internal normally closed, MP918A and B, or MP909E and H damper actuators

14004062-003/U – Trunnion mounting bracket, is used for internal normally open, MP918A and B, or MP909E and H damper actuators

14004106-001/U – 3 inch long, actuator pushrod, converts internal N.C. to external, in MP918A and B, or MP909E and H damper actuators

14004107-001/U – Crankarm assembly converts internal N.C. to external trunnion mounting, in MP918A and B, or MP909E and H damper actuators

14004210-001/U – feedback spring kit includes; 1 orange spring (3 psi [21kPa]), 1 yellow spring (5 psi [34 kPa]), and 1 blue spring (10 psi [69 kPa])

14004236-001/U – Coupler, actuator shaft to 5/16 inch (8 mm) pushrod, is used with MP918 damper actuators

14004241-002/U – Hitch pin kit, equipped with 6 sets, is used with MP918A and B or MP909E and H, damper actuators

14004242-001/U – Top mount, operator assembly, used for MP918A and B damper actuators

26025B/U – Damper crank arm, for 3/8 in. (9.5 mm) diameter axles, includes an elongated slot, scaled at 40-50-60-75-90 degrees

312867C/U – Damper crank arm, for 1/2 in. (12.7mm) diameter axles, includes an elongated slot, scaled at 45-60-75-90 degrees

312867H/U – Externally mounted, linkage kit includes; crankarm, ball joint, and 7 inch long push rod

314440A/U – Clevis, clevis pin and cotter pin assembly used for MP909 damper actuators

315321/U – Crank arm ball joint, with 1/4 male threads, accepts 5-16 inch push rods

315781/U – Motor shaft ball joint, with 3/8 - 16 UNC female threads, fits 5/16 inch diameter pushrods

Replacement Parts

14004137-001/U – Retrofit kit used for adding positive positioner to MP909E damper actuators, or to repair MP909H damper actuators

Material Number	Air Connections	Spring Range (psi)	Spring Range (kPa)	Stroke	Maximum Safe Operating Pressure (psi)	Maximum Safe Operating Pressure (kPa)	Includes
MP909E1018/U	Dual Barbed fitting for 5/32 in. or 1/4 in. O.D. tubing	3 psi to 13 psi	21 kPa to 90 kPa	4 in. (102 mm)	29 psi	200 kPa	315781 Balljoint, Linkage Kit 14002061-006 and 14002850-001 Fixed External Mounting Bracket with Balljoint
MP909E1034/U	Dual Barbed fitting for 5/32 in. or 1/4 in. O.D. tubing	5 psi to 10 psi	34 kPa to 69 kPa	4 in. (102 mm)	29 psi	200 kPa	315781 Balljoint, Linkage Kit 14002061-006 and 14002850-001 Fixed External Mounting Bracket with Balljoint
MP909E1059/U	Dual Barbed fitting for 5/32 in. or 1/4 in. O.D. tubing	5 psi to 10 psi	34 kPa to 69 kPa	2 3/4 in. (70 mm)	29 psi	200 kPa	Actuator only. 3/8 in.-16 Threaded Shaft with stroke stops. No Mounting Bracket
MP909E1067/U	Dual Barbed fitting for 5/32 in. or 1/4 in. O.D. tubing	5 psi to 10 psi	34 kPa to 69 kPa	3 in. (79 mm)	29 psi	200 kPa	Fixed external unitary mounting bracket and clevis shaft with stroke stops
MP909E1083/U	Dual Barbed fitting for 5/32 in. or 1/4 in. O.D. tubing	2.5 psi to 6.5 psi	17 kPa to 45 kPa	3 in. (79 mm)	29 psi	200 kPa	315781 Balljoint, Linkage Kit 14002061-006 and 14002850-001 Fixed External Mounting Bracket with Balljoint
MP909E1109/U	Dual Barbed fitting for 5/32 in. or 1/4 in. O.D. tubing	2.5 psi to 6.5 psi	17 kPa to 45 kPa	2 3/4 in. (70 mm)	29 psi	200 kPa	Actuator only. 3/8 in.-16 Threaded Shaft with stroke stops. No Mounting Bracket
MP909E1158/U	Dual Barbed fitting for 5/32 in. or 1/4 in. O.D. tubing	9 psi to 13 psi	62 kPa to 90 kPa	3 in. (79 mm)	29 psi	200 kPa	Actuator only. 3/8 in.-16 Threaded Shaft. No Mounting Bracket
MP909E1174/U	Dual Barbed fitting for 5/32 in. or 1/4 in. O.D. tubing	9 psi to 13 psi	62 kPa to 90 kPa	3 in. (70 mm)	29 psi	200 kPa	14002850-001 - Fixed External Mounting Bracket with 315781 Balljoint
MP909E1240/U	Dual Barbed fitting for 5/32 in. or 1/4 in. O.D. tubing	5 psi to 10 psi	34 kPa to 69 kPa	3 in. (79 mm)	29 psi	200 kPa	Actuator only. 3/8 in.-16 Threaded Shaft. No Mounting Bracket
MP909E1349/U	Dual Barbed fitting for 5/32 in. or 1/4 in. O.D. tubing	3 psi to 13 psi	21 kPa to 90 kPa	4 in. (102 mm)	29 psi	200 kPa	Internal N.C. trunnion mounting bracket
MP909E1356/U	Dual Barbed fitting for 5/32 in. or 1/4 in. O.D. tubing	3 psi to 13 psi	21 kPa to 90 kPa	4 in. (102 mm)	29 psi	200 kPa	External trunnion mounting bracket
MP909E1364/U	Dual Barbed fitting for 5/32 in. or 1/4 in. O.D. tubing	5 psi to 10 psi	34 kPa to 69 kPa	4 in. (102 mm)	29 psi	200 kPa	External trunnion mounting bracket
MP909E1372/U	Dual Barbed fitting for 5/32 in. or 1/4 in. O.D. tubing	2.5 psi to 6.5 psi	17 kPa to 45 kPa	3 in. (70 mm)	29 psi	200 kPa	External trunnion mounting bracket

Pneumatic Damper Actuators

Material Number	Air Connections	Spring Range (psi)	Spring Range (kPa)	Stroke	Maximum Safe Operating Pressure (psi)	Maximum Safe Operating Pressure (kPa)	Includes
MP909E1380/U	Dual Barbed fitting for 5/32 in. or 1/4 in. O.D. tubing	9 psi to 13 psi	62 kPa to 90 kPa	3 in. (79 mm)	29 psi	200 kPa	External trunnion mounting bracket
MP909E1398/U	Dual Barbed fitting for 5/32 in. or 1/4 in. O.D. tubing	9 psi to 13 psi	62 kPa to 90 kPa	3 in. (79 mm)	29 psi	200 kPa	Internal N.C. trunnion mounting bracket
MP909E1422/U	Dual Barbed fitting for 5/32 in. or 1/4 in. O.D. tubing	5 psi to 10 psi	34 kPa to 69 kPa	4 in. (102 mm)	29 psi	200 kPa	14004062-003 Internal N.O. Mounting Bracket with crankarm and pushrod assembly
MP909E1463/U	Dual Barbed fitting for 5/32 in. or 1/4 in. O.D. tubing	5 psi to 10 psi	34 kPa to 69 kPa	4 in. (102 mm)	29 psi	200 kPa	14002850-001 - Fixed External Mounting Bracket
MP909H1331/U	Positioner: Pilot 5/32 in. barb, Main 1/4 in. barb, Branch 1/4 in. barb. Actuator: combination 5/32 in. and 1/4 in. barb	Positive positioner 10 psi span (5 psi spring included)	Positive positioner 69 kPa span (34 kPa spring included)	4 in. (102 mm)	25 psi	172 kPa	315781 Balljoint, Positive Positioner, and 14002850-001 - Fixed External Mounting Bracket with Balljoint
MP909H1368/U	Positioner: Pilot 5/32 in. barb, Main 1/4 in. barb, Branch 1/4 in. barb. Actuator: combination 5/32 in. and 1/4 in. barb	Positive positioner 10 psi span (5 psi spring included)	Positive positioner 69 kPa span (34 kPa spring included)	4 in. (102 mm)	25 psi	172 kPa	External Trunnion Bracket, Positive Positioner
MP909H1392/U	Positioner: Pilot 5/32 in. barb, Main 1/4 in. barb, Branch 1/4 in. barb. Actuator: combination 5/32 in. and 1/4 in. barb	Positive positioner 10 psi span (5 psi spring included)	Positive positioner 69 kPa span (34 kPa spring included)	4 in. (102 mm)	25 psi	172 kPa	Mounting bracket for internal N.C. Trunnion mounting, positive positioner

Dimensions Diagram in inches (millimeters)
Actuator with Fixed External Mounting Bracket

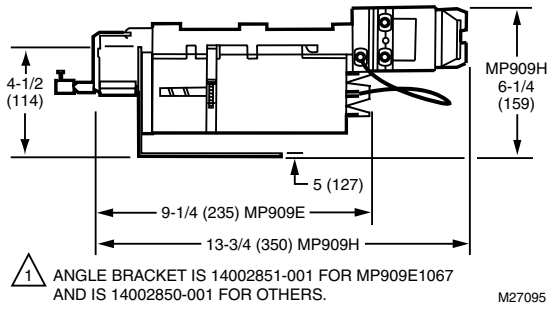

Dimensions Diagram in inches (millimeters)
Actuator with Internal N.C. Trunnion Mounting Bracket

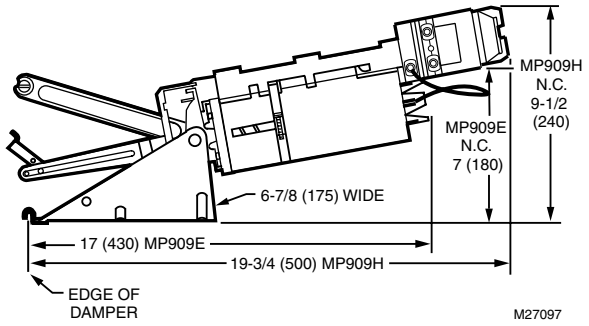

Dimensions Diagram in inches (millimeters)
Actuator with External Trunnion Mounting Bracket

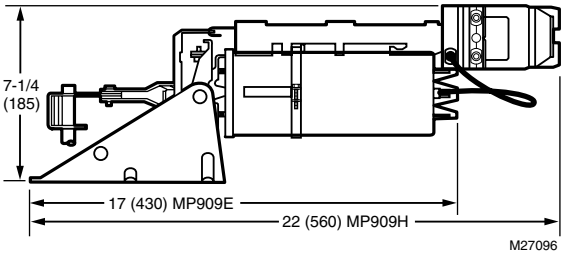

Dimensions Diagram in inches (millimeters)
Actuator with Internal N. O. Trunnion Mounting Bracket

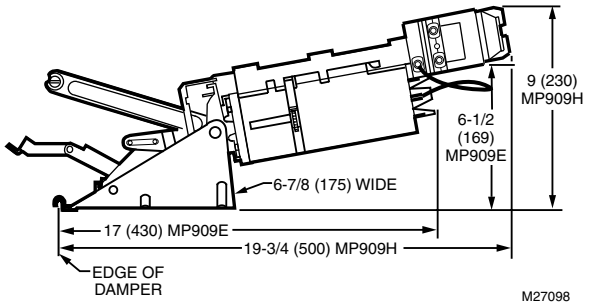

MP909E,H Piping Diagram

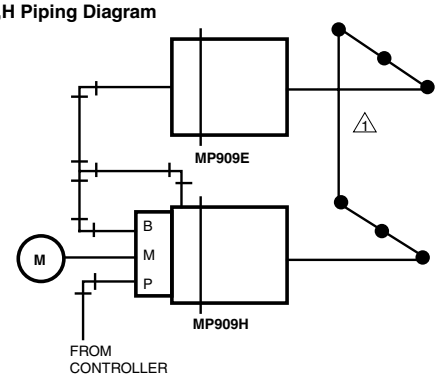

1 SECTIONS OF LARGE DAMPER REQUIRING MORE THAN ONE OPERATOR MUST BE LINKED

M5575

MP913 Pneumatic Variable Volume Damper Actuator

Gives proportional control of variable volume dampers in small high velocity mixing boxes. Replacement devices are available for Johnson and Robertshaw models. Use for direct replacement only, do not replace larger damper actuators with this unit.

- Compact in size.
- Neoprene rolling diaphragm.
- The MP913 Operator can be used with or without a crankarm.

Actuator Type: Damper
Actuator Force (kPa): Low
Stroke: 1 in. (25 mm)
Diaphragm Effective Area (sq in.): 2.2 sq in.
Diaphragm Effective Area (sq cm): 14 sq cm
Maximum Safe Operating Pressure (psi): 30 psi
Maximum Safe Operating Pressure (kPa): 207 kPa
Temperature Range: 50°F to 140°F (10°C to 60°C)
Fail Safe Mode: Spring Return
Air Connections: Barbed fitting for 1/4 in. O.D. plastic tubing
Operating Humidity Range (% RH): 5 to 95% RH
Dimensions: 2 5/8 in. high (add 3/4 in. for shaft) x 2 1/4 in. diameter (67 mm high (add 19 mm for shaft) x 57 mm diameter)

Accessories
315321/U – Crank arm ball joint, with 1/4 male threads, accepts 5-16 inch push rods
315781/U – Motor shaft ball joint, with 3/8 - 16 UNC female threads, fits 5/16 inch diameter pushrods

MP913A Typical Piping

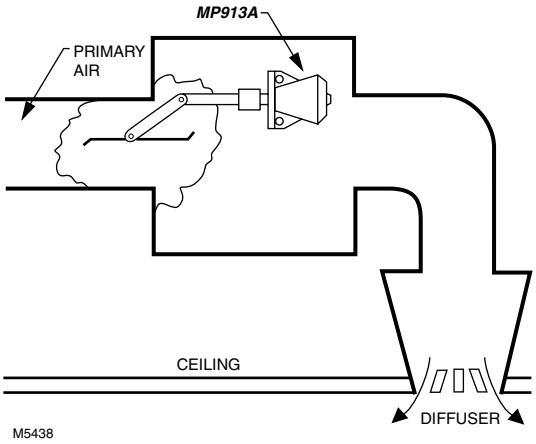

Material Number	Spring Range (psi)	Spring Range (kPa)	Includes
MP913A1003/U	10 psi to 15 psi	69 kPa to 103 kPa	14002808-001 - Flat Mounting Bracket. Shaft has 1/8 in. diameter hole for a roll pin.
MP913A1011/U	10 psi to 15 psi	69 kPa to 103 kPa	14003640-001 - 90 degree Angled Mounting Bracket and 3/8 in.-16 Threaded Shaft
MP913A1029/U	5 psi to 10 psi	34 kPa to 69 kPa	14003640-001 - 90 degree Angled Mounting Bracket and 3/8 in.-16 Threaded Shaft
MP913A1037/U	5 psi to 10 psi	34 kPa to 69 kPa	14003640-001 - 90 degree Angled Mounting Bracket. Shaft has 1/8 in. diameter hole for a roll pin.
MP913A1177/U	3 psi to 13 psi	21 kPa to 90 kPa	14002809-001 - 90 degree Angled Mounting Bracket (3-point attachment) and 3/8 inch - 16 threaded shaft

MP918A, B Pneumatic Damper Actuators

Used for proportional control of medium- to large-size dampers in HVAC systems. The MP918A, B are rolling diaphragm, piston-type actuators. Positive Positioner available. Replacement devices for most competitors products.

- Rolling diaphragm operated.
- Low friction shaft bearing.
- Close tolerance on operating range and stroke.
- Versatile mounting and connecting hardware.
- Non-overlapping spring ranges for sequencing.
- Reliable-long life.

Actuator Type: Damper
Actuator Force (kPa): High
Stroke: 3 1/2 in. (90 mm)
Diaphragm Effective Area (sq in.): 23.8 sq in.
Diaphragm Effective Area (sq cm): 154 sq cm
Fail Safe Mode: Spring Return
Operating Humidity Range (% RH): 5 to 95% RH
Approvals, Underwriters Laboratories Inc.: Components Recognized: Report R18118

Accessories

14004062-001/U – External trunnion mounting bracket is used for MP918A and B, or MP909E and H damper actuators
14004062-002/U – Trunnion mounting bracket, is used for internal normally closed, MP918A and B, or MP909E and H damper actuators
14004062-003/U – Trunnion mounting bracket, is used for internal normally open, MP918A and B, or MP909E and H damper actuators
14004106-001/U – 3 inch long, actuator pushrod, converts internal N.C. to external, in MP918A and B, or MP909E and H damper actuators
14004107-001/U – Crankarm assembly converts internal N.C. to external trunnion mounting, in MP918A and B, or MP909E and H damper actuators
14004210-001/U – feedback spring kit includes; 1 orange spring (3 psi [21kPa]), 1 yellow spring (5 psi [34 kPa]), and 1 blue spring (10 psi [69 kPa])
14004236-001/U – Coupler, actuator shaft to 5/16 inch (8 mm) pushrod, is used with MP918 damper actuators
14004241-002/U – Hitch pin kit, equipped with 6 sets, is used with MP918A and B or MP909E and H, damper actuators
14004242-001/U – Top mount, operator assembly, is used for MP918A and B damper actuators
CCT2718/U – Threaded rod, for shaft extension in MP918 damper actuators
CCT2725/U – A rod coupling, for shaft extension in MP918 damper actuators

Replacement Parts

14004264-001/U – Positive positioner kit and bracket assembly used with MP918A damper actuators
14004264-002/U – Positive positioner, retrofit kit with a 10 psi feedback spring, converts damper actuator MP918B 18-13 psi

Material Number	Air Connections	Spring Range (psi)	Spring Range (kPa)	Maximum Safe Operating Pressure (psi)	Maximum Safe Operating Pressure (kPa)	Dimensions	Temperature Range	Includes
MP918A1024/U	5/32 in. push-on barb (Pilot), 1/4 in. push-on barb (main.)	Positive positioner 10 psi span (5 psi spring included)	Positive positioner 69 kPa span (34 kPa spring included)	25 psi	172 kPa	20 1/2 in. long x 8 in. high x 6 5/8 in. diameter (520 mm long x 205 mm high x 168 mm diameter)	-20°F to +158°F (-29°C to +70°C)	14004062-001 - External Trunnion Mounting Bracket with crankarm assembly. Positive Positioner
MP918A1057/U	5/32 in. push-on barb (Pilot), 1/4 in. push-on barb (main.)	Positive positioner 10 psi span (5 psi spring included)	Positive positioner 69 kPa span (34 kPa spring included)	25 psi	172 kPa	20 1/2 in. long x 8 in. high x 6 5/8 in. diameter (520 mm long x 205 mm high x 168 mm diameter)	-20°F to +158°F (-29°C to +70°C)	14004062-002 - Internal N.C. Trunnion Mounting Bracket with pushrod assembly. Positive Positioner
MP918A1081/U	5/32 in. push-on barb (Pilot), 1/4 in. push-on barb (main.)	Positive positioner 10 psi span (5 psi spring included)	Positive positioner 69 kPa span (34 kPa spring included)	25 psi	172 kPa	20 1/2 in. long x 8 in. high x 6 5/8 in. diameter (520 mm long x 205 mm high x 168 mm diameter)	-20°F to +158°F (-29°C to +70°C)	14004062-003 - Internal N.O. Trunnion Mounting Bracket with pushrod assembly. Positive Positioner
MP918B1006/U	Barbed fitting for 1/4 in. O.D. plastic tubing	3 psi to 13 psi	20 kPa to 90 kPa	29 psi	200 kPa	18 1/4 in. long x 6 7/8 in. high x 6 5/8 in. diameter (465 mm long x 175 mm high x 168 mm diameter)	-40°F to +158°F (-40°C to +70°C)	14004062-001 - External Trunnion Mounting Bracket with crankarm assembly
MP918B1014/U	Barbed fitting for 1/4 in. O.D. plastic tubing	3 psi to 13 psi	20 kPa to 90 kPa	29 psi	200 kPa	18 1/4 in. long x 6 7/8 in. high x 6 5/8 in. diameter (465 mm long x 175 mm high x 168 mm diameter)	-40°F to +158°F (-40°C to +70°C)	14004062-002 - Internal N.C. Trunnion Mounting Bracket with pushrod assembly
MP918B1022/U	Barbed fitting for 1/4 in. O.D. plastic tubing	3 psi to 13 psi	20 kPa to 90 kPa	29 psi	200 kPa	18 1/4 in. long x 6 7/8 in. high x 6 5/8 in. diameter (465 mm long x 175 mm high x 168 mm diameter)	-40°F to +158°F (-40°C to +70°C)	14004062-003 Internal N.O. Trunnion Mounting Bracket with pushrod assembly
MP918B1030/U	Barbed fitting for 1/4 in. O.D. plastic tubing	3 psi to 13 psi	20 kPa to 90 kPa	29 psi	200 kPa	18 1/4 in. long x 6 7/8 in. high x 6 5/8 in. diameter (465 mm long x 175 mm high x 168 mm diameter)	-40°F to +158°F (-40°C to +70°C)	Actuator only. No Mounting Bracket
MP918B1048/U	Barbed fitting for 1/4 in. O.D. plastic tubing	5 psi to 10 psi	34 kPa to 69 kPa	29 psi	200 kPa	18 1/4 in. long x 6 7/8 in. high x 6 5/8 in. diameter (465 mm long x 175 mm high x 168 mm diameter)	-40°F to +158°F (-40°C to +70°C)	14004062-001 - External Trunnion Mounting Bracket with crankarm assembly

Material Number	Air Connections	Spring Range (psi)	Spring Range (kPa)	Maximum Safe Operating Pressure (psi)	Maximum Safe Operating Pressure (kPa)	Dimensions	Temperature Range	Includes
MP918B1063/U	Barbed fitting for 1/4 in. O.D. plastic tubing	3 psi to 7 psi	20 kPa to 48 kPa	29 psi	200 kPa	18 1/4 in. long x 6 7/8 in. high x 6 5/8 in. diameter (465 mm long x 175 mm high x 168 mm diameter)	-40°F to +158°F (-40°C to +70°C)	14004062-001 - External Trunnion Mounting Bracket with crankarm assembly
MP918B1071/U	Barbed fitting for 1/4 in. O.D. plastic tubing	3 psi to 7 psi	20 kPa to 48 kPa	29 psi	200 kPa	18 1/4 in. long x 6 7/8 in. high x 6 5/8 in. diameter (465 mm long x 175 mm high x 168 mm diameter)	-40°F to +158°F (-40°C to +70°C)	14004062-002 Internal N.C. Trunnion Mounting Bracket with pushrod assembly
MP918B1089/U	Barbed fitting for 1/4 in. O.D. plastic tubing	8 psi to 13 psi	55 kPa to 90 kPa	29 psi	200 kPa	18 1/4 in. long x 6 7/8 in. high x 6 5/8 in. diameter (465 mm long x 175 mm high x 168 mm diameter)	-40°F to +158°F (-40°C to +70°C)	14004062-001 - External Trunnion Mounting Bracket with crankarm assembly
MP918B1097/U	Barbed fitting for 1/4 in. O.D. plastic tubing	8 psi to 13 psi	55 kPa to 90 kPa	29 psi	200 kPa	18 1/4 in. long x 6 7/8 in. high x 6 5/8 in. diameter (465 mm long x 175 mm high x 168 mm diameter)	-40°F to +158°F (-40°C to +70°C)	14004062-002 Internal N.C. Trunnion Mounting Bracket with pushrod assembly
MP918B1105/U	Barbed fitting for 1/4 in. O.D. plastic tubing	8 psi to 13 psi	55 kPa to 90 kPa	29 psi	200 kPa	18 1/4 in. long x 6 7/8 in. high x 6 5/8 in. diameter (465 mm long x 175 mm high x 168 mm diameter)	-40°F to +158°F (-40°C to +70°C)	14004062-003 Internal N.O. Trunnion Mounting Bracket with pushrod assembly
MP918B1113/U	Barbed fitting for 1/4 in. O.D. plastic tubing	8 psi to 13 psi	55 kPa to 90 kPa	29 psi	200 kPa	18 1/4 in. long x 6 7/8 in. high x 6 5/8 in. diameter (465 mm long x 175 mm high x 168 mm diameter)	-40°F to +158°F (-40°C to +70°C)	Actuator only. No Mounting Bracket
MP918B1196/U	Barbed fitting for 1/4 in. O.D. plastic tubing	8 psi to 13 psi	55 kPa to 90 kPa	29 psi	200 kPa	18 1/4 in. long x 6 7/8 in. high x 6 5/8 in. diameter (465 mm long x 175 mm high x 168 mm diameter)	-40°F to +158°F (-40°C to +70°C)	14004062-001 - External Trunnion Mounting Bracket with crankarm assembly

Dimensions Diagram in inches (millimeters)
Actuator with External Trunnion Mounting Bracket

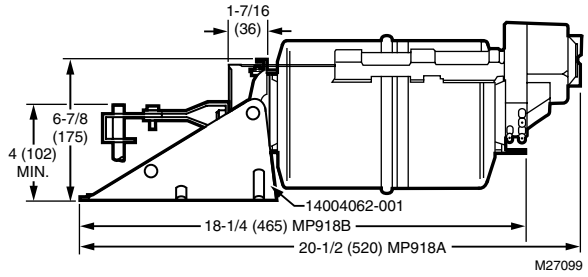

Dimensions Diagram in inches (millimeters)
Actuator with Internal N.C. Trunnion Mounting Bracket

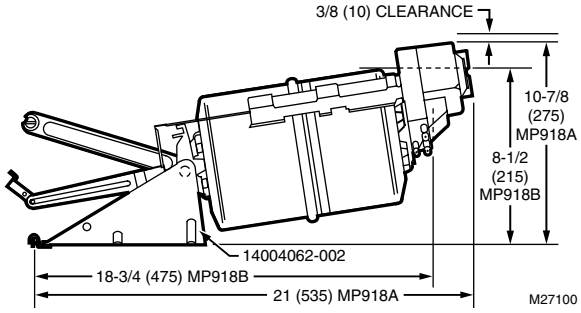

Dimensions Diagram in inches (millimeters)
Actuator with Internal N.O. Trunnion Mounting Bracket

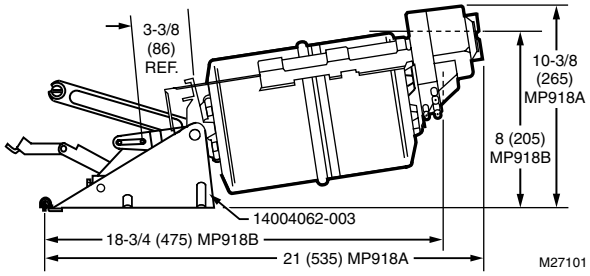

MP918A and B Typical Piping

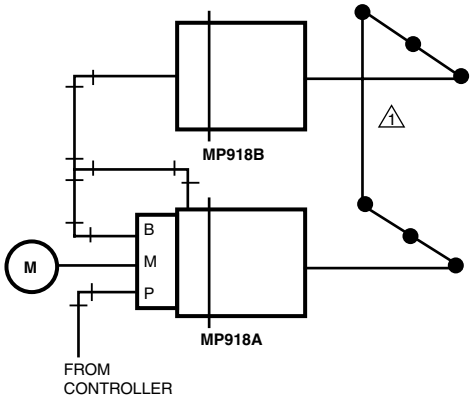

1 SECTIONS OF LARGE DAMPER REQUIRING MORE THAN ONE OPERATOR MUST BE LINKED

M5576

MP920 Pneumatic Damper Actuator

Provides proportional control of large dampers in HVAC systems or inlet vanes on a VAV fan. Positive positioner available separately. Replacement devices are available for Robertshaw actuator models.

- Rolling diaphragm operated.
- Fail safe on over pressure.
- Actuator can be swivel mounted from either end to pipe, floor, or wall surface.
- Optional positive positioner provides accurate positioning under varying load conditions.

Actuator Type: Damper
Actuator Force (kPa): High
Diaphragm Effective Area (sq in.): 24.8 sq in.
Diaphragm Effective Area (sq cm): 160 sq cm
Maximum Safe Operating Pressure (psi): 29 psi
Maximum Safe Operating Pressure (kPa): 200 kPa
Temperature Range: -20°F to +158°F (-30°C to +70°C)
Fail Safe Mode: Spring Return
Operating Humidity Range (% RH): 5 to 95% RH
Dimensions: Less bracket: 12 7/32 in. long, 6 3/16 in. diameter / Less bracket with positioner: 16 7/32 in. long, 8 1/4 in. diameter (Less bracket: 315 long, 157 mm diameter / Less bracket with positioner: 415 mm long, 210 mm diameter)

Accessories
14004062-001/U – External trunnion mounting bracket
14004236-001/U – Coupler, actuator shaft to 5/16 inch (8 mm) pushrod
14004241-002/U – Hitch pin kit, equipped with 6 sets
14004345-001/U – Positive positioner kit, with a 10 psi feedback spring, is used only on MP920B damper actuators
AK3560/U – Ball joint with a 3/8-24 threaded stud, and couplings for 5/8-11 threaded rod and actuator shaft, is used in MP920B damper actuators
AK3561/U – Ball joint with a 3/8-24 threaded stud and couplings for 3/8-16 threaded rod, is used in MP920B damper actuators

MP920B Typical Piping

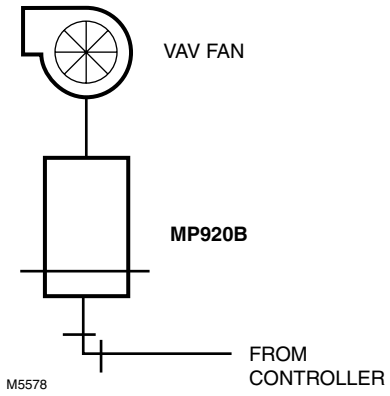

Dimensions Diagram in inches (millimeters)

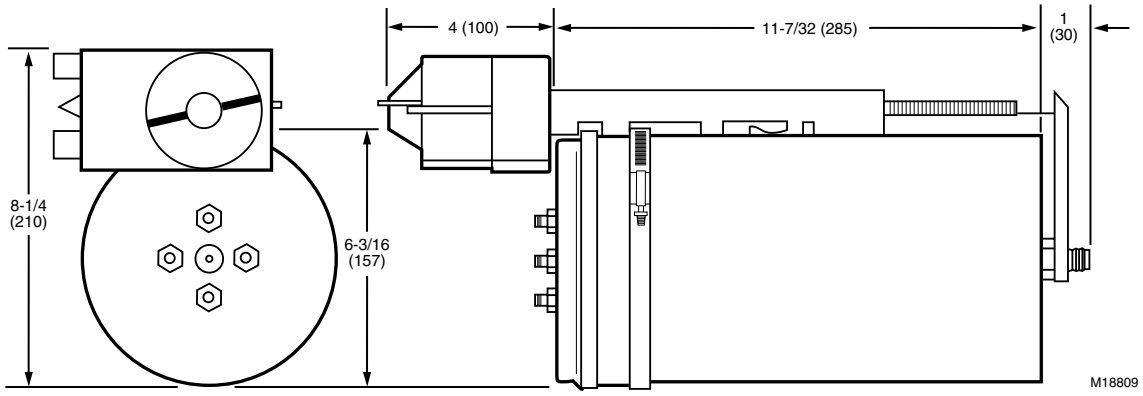

Material Number	Air Connections	Spring Range (psi)	Spring Range (kPa)	Stroke	Includes
MP920B1002/U	Barbed fitting for 1/4 in. O.D. plastic tubing	7.25 psi to 13 psi	50 kPa to 90 kPa	6 in. (150 mm)	Actuator only. No Bracket. Order positive positioner, mounting and connecting hardware separately. See Installation Instructions form no. 95-6053

Pneumatic Damper Actuator Parts and Accessories

Material Number	Description	Used With	
14001213-001/U	This diaphragm is used in MP904A and B damper actuators (Note: 312809C includes this part)	MP904A,B	
14002061-001/U	This damper linkage kit, with template, is used in MP909E and F damper actuators	MP909E,F	
14002850-001/U	This angle bracket, used in MP909D and E damper actuators, measures; 5-3/8 inch (137 mm) long and 5 inch (127 mm) wide	MP909D,E	
14003640-001/U	This angle bracket, used in MP909D and MP913 damper actuators, measures; 3 inch (76 mm) long, 3-3/4 inch (95 mm) wide and 2-3/4 inch (70 mm) high	MP913,MP909D	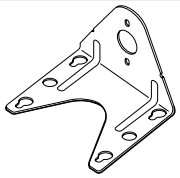 14003640
14004062-001/U	This external trunnion mounting bracket is used for MP918A and B, or MP909E and H damper actuators	MP918A,B,MP909E,H	
14004062-002/U	This trunnion mounting bracket, is used for internal normally closed, MP918A and B, or MP909E and H damper actuators	MP918A,B,MP909E,H	
14004062-003/U	This trunnion mounting bracket, is used for internal normally open, MP918A and B, or MP909E and H damper actuators	MP918A,B,MP909E,H	
14004106-001/U	This 3 inch long, actuator pushrod, converts internal N.C. to external, in MP918A and B, or MP909E and H damper actuators	MP918A,B,MP909E,H	
14004106-002/U	This push rod assembly, for internal N.C., is used in MP918A and B, or MP909E and H damper actuators	MP918A,B,MP909E,H	
14004107-001/U	This crankarm assembly converts internal N.C. to external trunnion mounting, in MP918A and B, or MP909E and H damper actuators	MP918A,B,MP909E,H	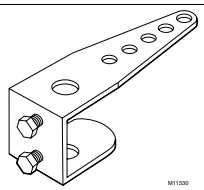 14004107
14004136-001/U	This positive positioner retrofit kit is used for MP904 damper actuators	MP904A	
14004137-001/U	This retrofit kit is used for adding positive positioner to MP909E damper actuators, or to repair MP909H damper actuators	MP909E,MP909H	
14004210-001/U	This feedback spring kit, used for MP918A and MP909H damper actuators, includes; 1 orange spring (3 psi [21kPa]), 1 yellow spring (5 psi [34 kPa]), and 1 blue spring (10 psi [69 kPa])	MP909H,MP918A	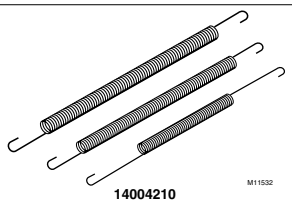 14004210
14004236-001/U	This coupler, actuator shaft to 5/16 inch (8 mm) pushrod, is used with MP918 damper actuators	MP918	
14004237-002/U	This bag assembly, used for MP918A and B, or MP909E and H damper actuators, includes 4 hex head slotted drill point screws (14004513-001)	MP918A,B,MP909E,H	
14004241-002/U	This hitch pin kit, equipped with 6 sets, is used with MP918A and B or MP909E and H, damper actuators	MP918A,B,MP909E,H	
14004242-001/U	This top mount, operator assembly, is used for MP918A and B damper actuators	MP918A,B	
14004264-001/U	This positive positioner kit and bracket assembly, is used with MP918A damper actuators	MP918A	
14004264-002/U	This positive positioner, retrofit kit with a 10 psi feedback spring, converts damper actuator MP918B 18-13 psi	MP918B	
14004324-001/U	This kit is used for, alternate external, top-mount, MP909E and H or MP918A and B, damper actuators	MP918A,B,MP909E,H	
14004345-001/U	This positive positioner kit, with a 10 psi feedback spring, is used only on MP920B damper actuators	MP920B	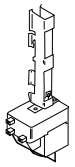 14004345-001 POSITIONER KIT
14004577-001/U	This direct acting, 5 inch diameter, yoke/base assembly is used in MP953A, C, and E damper actuators	MP953A,C,E	

Pneumatic Damper Actuators

Material Number	Description	Used With	
26025B/U	This damper crank arm, for 3/8 in. (9.5 mm) diameter axles, includes an elongated slot, scaled at 40-50-60-75-90 degrees, for linkage connections in MP909E and H, MP516 or MP909D damper actuators	MP516,MP909D,MP909E, H	
27174B/U	This damper crank arm, for 7/16 inch (11.1 mm) diameter axles, includes an elongated slot, scaled at 40-50-60-75-90 degrees, for linkage connection in damper actuators	MP516,MP513	
309292/U	309292 is a diaphragm used for MP516A damper actuators	MP516	
309389J/U	This mounting bracket and linkage is used in MP516 damper actuators	MP516	
312809C/U	312809C is a tube and diaphragm assembly, used for MP904A and B damper actuators	MP904A,B	
312817/U	312817 is a cover, used for 5 inch diameter, MP953C damper actuators	MP953C (5 in.)	
312867H/U	This externally mounted, linkage kit, used in MP516, MP909D, E and H damper actuators, includes; crankarm, ball joint, and 7 inch long push rod	MP516,MP909D,E,H	
314100/U	314100 is a replacement diaphragm, for MP909A damper actuators	MP909A	
314316A/U	314316A is a crank arm assembly, used in MP516 damper actuators	MP516	
314440A/U	This clevis, clevis pin & cotter pin assembly is used for MP909 damper actuators	MP909	
315321/U	This crank arm ball joint, with 1/4 male threads, accepts 5-16 inch push rods in MP909D, E or H, MP913 and MP516 damper actuators	MP516,MP909D,E,H,MP913	
315321G/U	315321G is a crankarm and linkage assembly, for MP909A and D damper actuators	MP909A,D	
315439/0062/U	315439/0062 is a clevis, used for MP909D damper actuators	MP909D	
315781/U	This motor shaft ball joint, with 3/8 - 16 UNC female threads, fits 5/16 inch diameter pushrods in MP909D, E or H and MP913 damper actuators	MP909D,E,H,MP913	
315782/U	This ball joint, with 9/16 -18 UNC threads, accepts 5/16 inch pushrods in MP920B damper actuators	MP920B	
AK3560/U	This ball joint with a 3/8-24 threaded stud, and couplings for 5/8-11 threaded rod and actuator shaft, is used in MP920B damper actuators	MP920B	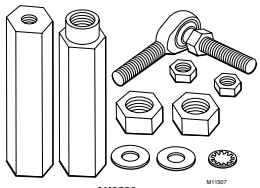 AK3560
AK3561/U	This ball joint with a 3/8-24 threaded stud and couplings for 3/8-16 threaded rod, is used in MP920B damper actuators	MP920B	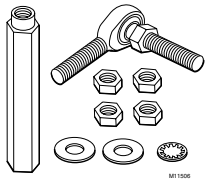 AK3561
CCT2718/U	CCT2718 is a threaded rod, for shaft extension in MP918 damper actuators	MP918	
CCT2725/U	CCT2725 is a rod coupling, for shaft extension in MP918 damper actuators	MP918	

Pneumatic Damper Actuator Parts and Accessories Damper Actuators

Material Number	Description	Used With
312867C/U	This damper crank arm, for 1/2 in. (12.7mm) diameter axles, includes an elongated slot, scaled at 45-60-75-90 degrees, for linkage connections in MP516, MP909D, MP909E and MP909H damper actuators	MP516,MP909D,MP909E,MP909H

MP953C, D Pneumatic Coil Valve Actuators

Pneumatic actuators provide proportional control of steam or hot or cold liquids in HVAC systems by operating V5011, V5013, and VGF valve assemblies. Replacement devices are available for older Honeywell actuators.

- Rolling diaphragm for long life and low hysteresis.
- Easily attached to valve.
- Can be installed after piping valve.
- Slide lock feature permits simple engagement to valve stem.
- Direct- or reverse-action control.
- Does not include positive positioner.

Actuator Type: Valve
Maximum Safe Operating Pressure (psi): 25 psi
Maximum Safe Operating Pressure (kPa): 172 kPa
Temperature Range: 0°F to 140°F (-18°C to +60°C)
Fail Safe Mode: Spring Return

Air Connections: Dual barbed fitting for 5/32 in. O.D. and 1/4 in. O.D. plastic tubing
Operating Humidity Range (% RH): 5 to 95% RH

Material Number	Product Action	Actuator Force (kPa)	Spring Range (psi)	Spring Range (kPa)	Stroke	Diameter (in.)	Includes	Comments	Used With
MP953C1000/U	Direct Acting	Low	2 psi to 7 psi	14 kPa to 48 kPa	3/4 in. (19 mm)	5 in.			Valves with bonnet size 1-3/8 in. (35 mm)
MP953C1000S/U	Direct Acting	Low	2 psi to 7 psi	14 kPa to 48 kPa	3/4 in. (19 mm)	5 in.			
MP953C1018/U	Direct Acting	Low	8 psi to 12 psi	55 kPa to 83 kPa	3/4 in. (19 mm)	5 in.			Valves with bonnet size 1-3/8 in. (35 mm)
MP953C1026/U	Direct Acting	Low	4 psi to 11 psi	28 kPa to 76 kPa	3/4 in. (19 mm)	5 in.			Valves with bonnet size 1-3/8 in. (35 mm)
MP953C1067/U	Direct Acting	Medium	2 psi to 7 psi	14 kPa to 48 kPa	3/4 in. (19 mm)	8 in.	311851-062 Stem Extension Assembly		Valves with bonnet size 1-3/8 in. (35 mm)
MP953C1067S/U	Direct Acting	Medium	2 psi to 7 psi	14 kPa to 48 kPa	3/4 in. (19 mm)	8 in.	311851-062 Stem Extension Assembly		
MP953C1075/U	Direct Acting	Medium	8 psi to 12 psi	55 kPa to 83 kPa	3/4 in. (19 mm)	8 in.	311851-062 Stem Extension Assembly		Valves with bonnet size 1-3/8 in. (35 mm)
MP953C1083/U	Direct Acting	Medium	4 psi to 11 psi	28 kPa to 76 kPa	3/4 in. (19 mm)	8 in.	311851-062 Stem Extension Assembly		Valves with bonnet size 1-3/8 in. (35 mm)
MP953C1471/U	Direct Acting	High	2 psi to 7 psi	14 kPa to 48 kPa	1 1/2 in. (38 mm)	13 in.	312466-605 Stem Extension Assembly		Valves with bonnet size 1-7/8 in. (48 mm)
MP953C1489/U	Direct Acting	High	4 psi to 11 psi	28 kPa to 76 kPa	1 1/2 in. (38 mm)	13 in.	312466-605 Stem Extension Assembly		Valves with bonnet size 1-7/8 in. (48 mm)
MP953C1547/U	Direct Acting	Medium	3 psi to 15 psi	21 kPa to 104 kPa	1 1/2 in. (38 mm)	8 in.			Valves with bonnet size 1-3/8 in. (35 mm)
MP953C1554/U	Direct Acting	High	2 psi to 7 psi	14 kPa to 48 kPa	3/4 in. (19 mm)	13 in.	14004697-001 Stem Extension Assembly	13 in. diameter Actuator for 2-1/2 in. and 3 in. valves	Valves with bonnet size 1-3/8 in. (35 mm)
MP953C1562/U	Direct Acting	High	4 psi to 11 psi	28 kPa to 76 kPa	3/4 in. (19 mm)	13 in.	14004697-001 Stem Extension Assembly	13 in. diameter Actuator for 2-1/2 in. and 3 in. valves	Valves with bonnet size 1-3/8 in. (35 mm)
MP953D1107/U	Reverse Acting	Medium	8 psi to 13 psi	55 kPa to 90 kPa	3/4 in. (19 mm)	7 1/8 in.			Valves with bonnet size 1-3/8 in. (35 mm)
MP953D1131/U	Reverse Acting	Medium	4 psi to 11 psi	28 kPa to 76 kPa	3/4 in. (19 mm)	7 1/8 in.			Valves with bonnet size 1-3/8 in. (35 mm)
MP953D1172/U	Reverse Acting	Medium	3 psi to 7 psi	21 kPa to 48 kPa	3/4 in. (19 mm)	7 1/8 in.			Valves with bonnet size 1-3/8 in. (35 mm)

Dimensions Diagram in inches (millimeters)

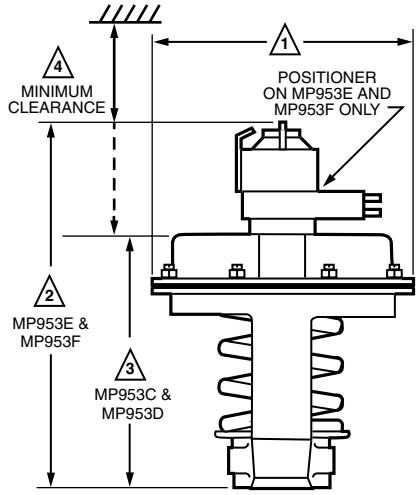

OPERATION SIZE NOMINAL DIA.	1	2	3	4
5 INCH	5-1/8 (130)	9-1/4 (235)	4-5/8 (117)	4-3/8 (111)
7-1/8 INCH	7-1/8 (181)	10-1/2 (267)	5-5/8 (143)	4-3/8 (111)
8 INCH	8-1/4 (210)	11-1/8 (283)	6-1/2 (165)	5-3/8 (137)
13 INCH	13-1/2 (343)	18-1/8 (460)	10 (254)	7-11/16 (195)

M13903

Typical MP953C,D Operation

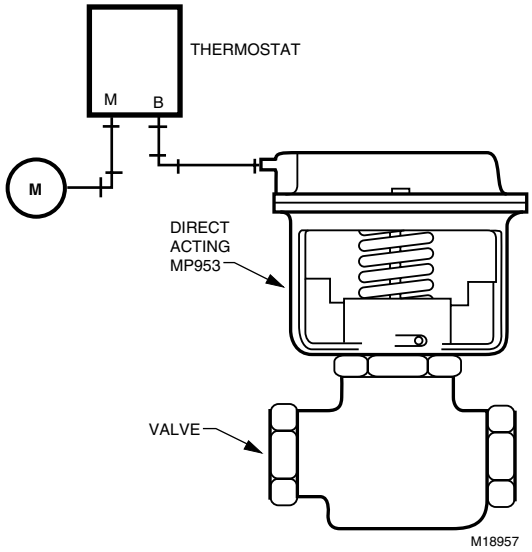

MP953E, F Pneumatic Coil Valve Actuators

Pneumatic actuators provide proportional control of steam or hot or cold liquids in HVAC systems by operating V5011, V5013, and VGF valve assemblies. Replacement devices are available for older Honeywell actuators.

- Rolling diaphragm for long life and low hysteresis.
- Easily attached to valve.
- Can be installed after piping valve.
- Slide lock feature permits simple engagement to valve stem.
- Direct- or reverse-action control.
- Integral positive positioner relay provides positive positioning under varying load conditions.

Actuator Type: Valve
Maximum Safe Operating Pressure (psi): 25 psi
Maximum Safe Operating Pressure (kPa): 172 kPa
Fail Safe Mode: Spring Return
Air Connections: Pilot: Barbed fitting for 5/32 in. O.D. plastic tubing, Main: Barbed fitting for 1/4 in. O.D. plastic tubing
Operating Humidity Range (% RH): 5 to 95% RH
Temperature Range: 0°F to 140°F (-18°C to +60°C)

Accessories

14004138-001/U – Reverse acting, positive positioner retrofit kit is used with MP953B and F valve actuators

14004139-001/U – Direct acting, 3/4 inch stroke, positive positioner retrofit kit is used with 8 inch and 13 inch diameter, MP953A and E valve actuators

14004140-001/U – Direct acting, 1-1/2 inch stroke, positive positioner retrofit kit is used with 8 inch and 13 inch diameter, MP953A and E valve actuators

14004214-001/U – Positive positioner kit, with 3/4 inch stroke, is used for 5 inch diameter, MP953A and E valve actuators

Material Number	Product Action	Actuator Force (kPa)	Spring Range (psi)	Spring Range (kPa)	Stroke	Diameter (in.)	Includes	Used With
MP953E1285/U	Direct Acting	Medium	4 psi to 11 psi	28 kPa to 76 kPa	1 1/2 in. (38 mm)	8 in.	Positive Positioner with 5 psi (35 kPa) range	Valves with bonnet size 1-3/8 in. (35 mm)
MP953E1301/U	Direct Acting	Low	4 psi to 11 psi	28 kPa to 76 kPa	3/4 in. (19 mm)	5 in.	Positive Positioner with 3 psi range (21 kPa)	Valves with bonnet size 1-3/8 in. (35 mm)
MP953E1319/U	Direct Acting	Low	4 psi to 11 psi	28 kPa to 76 kPa	3/4 in. (19 mm)	5 in.	Positive Positioner with 5 psi range (35 kPa)	Valves with bonnet size 1-3/8 in. (35 mm)
MP953E1327/U	Direct Acting	Low	4 psi to 11 psi	28 kPa to 76 kPa	3/4 in. (19 mm)	5 in.	Positive Positioner with 10 psi range (70 kPa)	Valves with bonnet size 1-3/8 in. (35 mm)
MP953E1368/U	Direct Acting	Medium	4 psi to 11 psi	28 kPa to 76 kPa	3/4 in. (19 mm)	8 in.	311851-062 Stem Extension Assembly and Positive Positioner with 3 psi range	Valves with bonnet size 1-3/8 in. (35 mm)
MP953E1376/U	Direct Acting	Medium	4 psi to 11 psi	28 kPa to 76 kPa	3/4 in. (19 mm)	8 in.	311851-062 Stem Extension Assembly and Positive Positioner with 5 psi range	Valves with bonnet size 1-3/8 in. (35 mm)
MP953E1384/U	Direct Acting	Medium	4 psi to 11 psi	28 kPa to 76 kPa	3/4 in. (19 mm)	8 in.	311851-062 Stem Extension Assembly and Positive Positioner with 10 psi range	Valves with bonnet size 1-3/8 in. (35 mm)
MP953E1400/U	Direct Acting	High	4 psi to 11 psi	28 kPa to 76 kPa	1 1/2 in. (38 mm)	13 in.	312466-605 Stem Extension Assembly and Positive Positioner with 5 psi range	Valves with bonnet size 1-7/8 in. (48 mm)
MP953E1418/U	Direct Acting	High	4 psi to 11 psi	28 kPa to 76 kPa	1 1/2 in. (38 mm)	13 in.	312466-605 Stem Extension Assembly and Positive Positioner with 10 psi range	Valves with bonnet size 1-7/8 in. (48 mm)
MP953E1435/U	Direct Acting	High	4 psi to 11 psi	28 kPa to 76 kPa	3/4 in. (19 mm)	13 in.	14004697-001 Stem Extension Assembly and Positive Positioner with 5 psi range (35 kPa)	Valves with bonnet size 1-3/8 in. (35 mm)
MP953E1443/U	Direct Acting	High	4 psi to 11 psi	28 kPa to 76 kPa	3/4 in. (19 mm)	13 in.	Positive Positioner with 10 psi range and 14004697-001 Stem Extension Assembly	Valves with bonnet size 1-3/8 in. (35 mm)
MP953F1093/U	Reverse Acting	Medium	8 psi to 13 psi	55 kPa to 90 kPa	3/4 in. (19 mm)	7 1/8 in.	Positive Positioner with 3 psi range and EPDM diaphragm	Valves with bonnet size 1-3/8 in. (35 mm)
MP953F1101/U	Reverse Acting	Medium	8 psi to 13 psi	55 kPa to 90 kPa	3/4 in. (19 mm)	7 1/8 in.	Positive Positioner with 5 psi range and EPDM diaphragm	Valves with bonnet size 1-3/8 in. (35 mm)
MP953F1119/U	Reverse Acting	Medium	8 psi to 13 psi	55 kPa to 90 kPa	3/4 in. (19 mm)	7 1/8 in.	Positive Positioner with 10 psi range and EPDM diaphragm	Valves with bonnet size 1-3/8 in. (35 mm)

Pneumatic Valve Actuators

Dimensions Diagram in inches (millimeters)

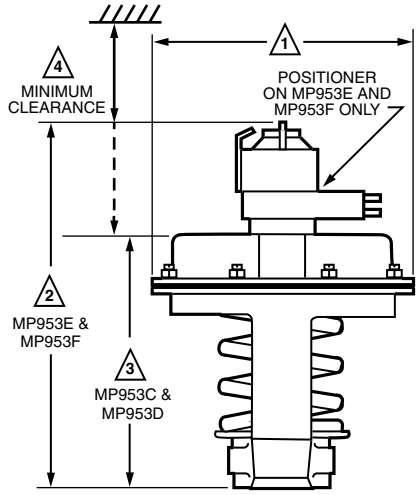

OPERATION SIZE NOMINAL DIA.	1	2	3	4
5 INCH	5-1/8 (130)	9-1/4 (235)	4-5/8 (117)	4-3/8 (111)
7-1/8 INCH	7-1/8 (181)	10-1/2 (267)	5-5/8 (143)	4-3/8 (111)
8 INCH	8-1/4 (210)	11-1/8 (283)	6-1/2 (165)	5-3/8 (137)
13 INCH	13-1/2 (343)	18-1/8 (460)	10 (254)	7-11/16 (195)

M13903

Typical Piping for MP953E,F Pneumatic Valve Actuator Wiring

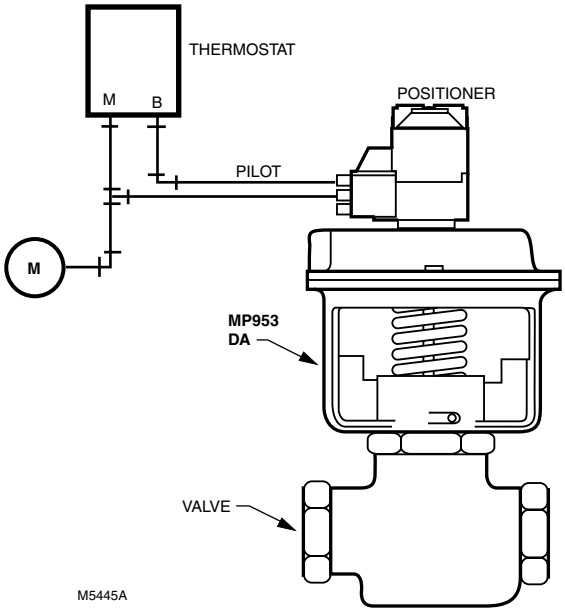

MP958 Pneumatic Valve Actuators

The MP958 Pneumatic Valve Actuator is direct-acting and used only with Honeywell V5852A2xx, V5862A2xx, V5853A2xx, and V5863A2xx Terminal Unit Valves to control hot and/or chilled water.

Actuator Type: Valve
Actuator Force (kPa): Low
Product Action: Direct Acting
Maximum Safe Operating Pressure (psi): 30 psi
Fail Safe Mode: Spring Return
Air Connections: Barbed fitting for 1/4 in. O.D. plastic tubing
Dimensions: 2 1/4 in. diameter x 3 3/16 in. maximum high (57 mm diameter x 81 mm maximum high)

Dimensions Diagram in inches (millimeters)

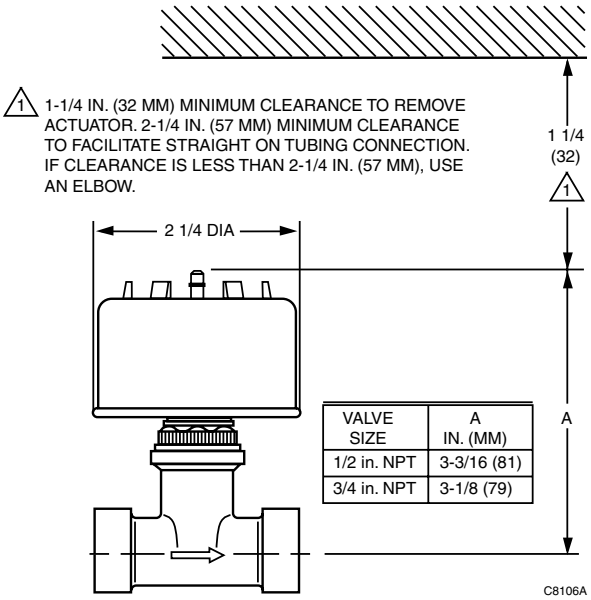

VALVE SIZE	A IN. (MM)
1/2 in. NPT	3-3/16 (81)
3/4 in. NPT	3-1/8 (79)

Close-off ratings

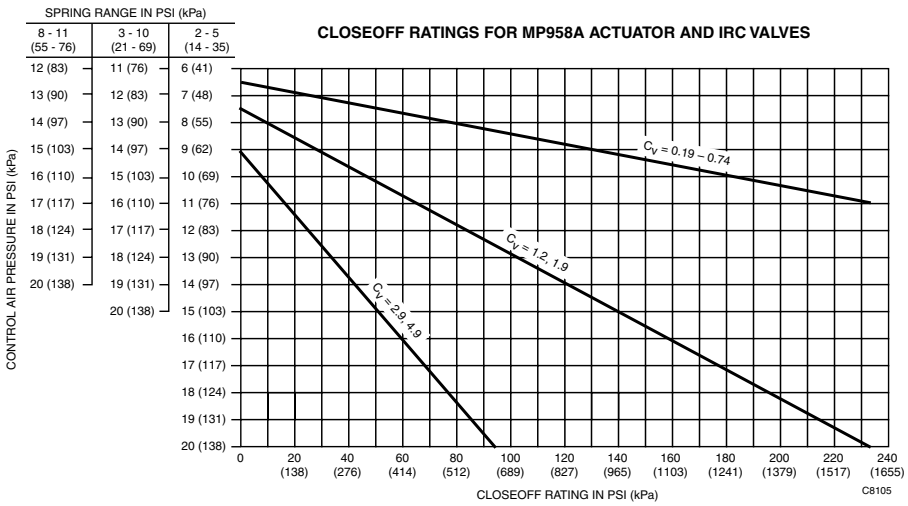

Material Number	Spring Range (psi)	Spring Range (kPa)	Comments
MP958A1009/U	2 psi to 5 psi	14 kPa to 35 kPa	Only works with V5852A2xx, V5862A2xx, V5853A2xx, V5863A2xx
MP958A1017/U	3 psi to 10 psi	21 kPa to 69 kPa	Only works with V5852A2xx, V5862A2xx, V5853A2xx, V5863A2xx
MP958A1025/U	8 psi to 11 psi	55 kPa to 76 kPa	Only works with V5852A2xx, V5862A2xx, V5853A2xx, V5863A2xx

Pneumatic Valve Actuator Parts and Accessories

Material Number	Description	Used With
14002039-001/U	This diaphragm sleeve is used in MP953B, D and F valve actuators	MP953B,D,F
14002040-002/U	This diaphragm is used in MP953B, D and F valve actuators	MP953B,D,F
14003124-002/U	This diaphragm repair kit, used in MP953B, D or F valve actuators, includes; diaphragms 14002040-002 & 14002039-001	MP953B,D,F
14004138-001/U	This reverse acting, positive positioner retrofit kit is used with MP953B and F valve actuators	MP953B,F
14004139-001/U	This direct acting, 3/4 inch stroke, positive positioner retrofit kit is used with 8 inch and 13 inch diameter, MP953A and E valve actuators	MP953A,E
14004140-001/U	This direct acting, 1-1/2 inch stroke, positive positioner retrofit kit is used with 8 inch and 13 inch diameter, MP953A and E valve actuators	MP953A,E
14004211-001/U	This feedback spring kit, with 3/4 inch stroke, is used for 8 inch and 13 inch, MP953E valve actuators	MP953E
14004212-001/U	This feedback spring kit, with a 1-1/2 inch stroke, is used for 8 inch and 13 inch, MP953E valve actuators	MP953E
14004213-001/U	This reverse acting, feedback spring kit is used for MP953F valve actuators	MP953F
14004214-001/U	This positive positioner kit, with 3/4 inch stroke, is used for 5 inch diameter, MP953A and E valve actuators	MP953A,E
14004298-001/U	This 4-40 thread forming screw, is used for MP953D and F valve actuators	MP953D,F
14004298-003/U	This 1/4-20 actuator base screw, is used for 5 inch diameter, MP953C and E and 7-1/8 inch diameter ,MP953B, D and F valve actuators	MP953B,D,F,MP953C,E (5 in.)
14004578-001/U	This reverse acting, 7-1/8 inch diameter, yoke/base assembly is used in MP953B, D, and F valve actuators	MP953B,D,F
14004660-001/U	This 7-1/64 inch cup, made from aluminum die cast alloy, is used in MP953D valve actuators	MP953D
310502-00767	This retainer, for 5 inch MP953A, C and E valve actuators, latches on the stem button	MP953A,C,E (5 in.)
310502-00767/U	This retainer, for 5 inch MP953A, C and E valve actuators, latches on the stem button	MP953A,C,E (5 in.)
310664/U	This tension spring is used for MP953A, C and E (5 inch and 8 inch models only) valve actuators	MP953A,C,E
310665/0062/U	This 5 inch spring support is used in MP953A, C and E valve actuators	MP953A,C,E (5 in.)
310665-00062/U	This 5 inch spring support is used in MP953A, C and E valve actuators	MP953A,C,E (5 in.)
310668/U	This old style, high temperature, silicone diaphragm, is used for 5 inch diameter, MP953A, C & E valve actuators	MP953A,C,E
311393/U	This white spring, with a range of 4 psi to 11 psi, is used in MP953C and E valve actuators	MP953C,E
311616/U	This brown, main spring, with a range of 2 psi to 7 psi, is used for 5 inch diameter, MP953A & C valve actuators	MP953A,C,E (5 in.)
311618/U	This gray, main spring, with a range of 8 psi to 12 psi, is used for 5 inch diameter, MP953A & C valve actuators	MP953A,C,E (5 in.)
311750/U	This new style, regular temperature, neoprene diaphragm, is used for 8 inch diameter, MP953A, C and E valve actuators	MP953A,C,E
311851/0062/U	This 3/4 inch stroke, stem extension, is used for 8 inch diameter, MP953A, C and E valve actuators	MP953A,C,E (8 in.)
311851-0062	This 3/4 inch stroke, stem extension, is used for 8 inch diameter, MP953A, C and E valve actuators	MP953A,C,E (8 in.)
311852/U	This brown spring, with a range of 2 psi to 7 psi, is used for 8 inch diameter, MP953A and C valve actuators	MP953A,C (8 in., 2-7 psi)
311855/U	This gray, main spring, with a range of 8 psi to 12 psi, is used for 8 inch diameter, MP953C valve actuators	MP953C
311863/U	311863 is a stem retainer, for 8 inch diameter, MP953C or E valve actuators	MP953C,E
312099/U	312099 is a 1-1/2 inch stroke, spider for 13 inch, MP953C and E valve actuators	MP953C,E
312203/U	312203 is a black spring, with 8 psi to 13 psi range, used for MP953D or F valve actuators	MP953D,F
312466/0605/U	312466/0605 is a stem extension, for MP953C1489, MP953C1471, MP953E1392, MP953E1400, and MP953E1418 valve actuators	MP953C,E
312466-0605/U	312466/0605 is a stem extension, for MP953C1489, MP953C1471, MP953E1392, MP953E1400, and MP953E1418 valve actuators	MP953C,E
312471/U	312471 is a white spring, with a 13 inch diameter and 1/2 inch stroke, used for MP95 C or E valve actuators	MP953C,E (13 in.)
312505/U	This new style, regular temperature, neoprene diaphragm, is used for 13 inch diameter, MP953A, C & E valve actuators	MP953A,C,E
312760/U	This new style, regular temperature, neoprene diaphragm, is used for 5 inch diameter, MP953A, C & E valve actuators	MP953A,C,E
313745/U	This new style, high temperature, silicone diaphragm, is used for 5 inch diameter, MP953A, C & E valve actuators	MP953A,C,E
314153/U	This new style, high temperature, silicone diaphragm, is used for 8 inch diameter, MP953A, C & E valve actuators	MP953A,C,E
314646A/0062/U	Plate, Spring for 13 in. MP953A,C,E	MP953A,C,E
314650A/U	This reverse acting, support assembly, is used for MP953B, D and F valve actuators (for series-2 actuators only, use This support assembly and 316059A yoke assembly to convert series-1 MO/MP953)	MP953B,D,F
314651A/U	This reverse acting, yoke assembly, with nylon insert for support assembly, is used for MP953B, D and F valve actuators	MP953B,D,F
314683/0062/U	This stem retainer, for 13 inch diameter, MP953A, C and E valve actuators, latches on the stem button	MP953A,C,E (13 in.)
314683-0062/U	This stem retainer, for 13 inch diameter, MP953A, C and E valve actuators, latches on the stem button	MP953A,C,E (13 in.)
315020/U	315020 is a cup, used for 13 inch diameter, MP95 C and E valve actuators	MP593C,E (13 in.)
316059A/U	This reverse acting, yoke assembly, with helicoil insert for support assembly, is used in MP953B, D and F valve actuators	MP953B,D,F

VP512 Unit Vent Pneumatic Control Valve

Normally open, single seated, straight-through or angle globe valve, for proportional control of steam/hot water in unit ventilator applications. Replacements are available for Johnson, Powers, Robertshaw, Barber-Colman, and older Honeywell devices.

- Equal percentage, high lift throttling guide provides accurate control over wide load variations.
- Molded replaceable composition disc for tight shut-off.
- Replaceable brass seat.
- Self-adjusting, spring-loaded Teflon™ packing.
- Back-seating allows repacking without shutting down or draining system.
- Rotatable actuator for aligning air connection with control air piping.
- Integral union connection to simplify installation and service.

Valve Action: Proportional Normally Open
Valve Type: Globe Valve
Connection Type: Outlet - External NPT Union, Inlet - Internal NPT
Body Pressure (psi): 150 psi
Maximum Diaphragm Pressure (psi): 25 psi
Maximum Diaphragm Pressure (kPa): 172 kPa
Dimensions: 5 1/8 in. diameter x 7 15/32 high (127 mm diameter x 190 mm high)
Air Connections: Dual barbed for 5/32 in. or 1/4 in. plastic tubing
Controlled Fluid: Water, Steam

Accessories

312817AA/U – Actuator Assembly, 3 to 8 psi, 21 to 55 kPa, and 1/2 in. stroke
312817AB/U – Actuator Assembly, 6 to 11 psi, 41 to 76 kPa and 1/2 in. stroke

Replacement Parts

14002863-001/U – Valve Rebuild Kit for 3/4 to 1 1/4 in. valves with CV of 6.3 or 10

Material Number	Body Pattern	Connection Size (in.)	Capacity (Cv)	Capacity (Kv)	Close-off Ratings at Branch Line Pressure	Spring Range (psi)	Spring Range (kPa)	Temperature Range	Operating Humidity Range (% RH)
VP512A1726/U	Two-way, Straight-through	1 in.	10 Cv	8.57 Kv	78 psi at 13 psi	3 psi to 8 psi	21 kPa to 55 kPa	For Water: 115°F to 240°F; For Steam: 212°F to 275°F; Maximum Actuator Temperature – 160°F; Maximum Temperature Differential 140°F for Water	5 to 95% RH
VP512A1726S/U	Two-way, Straight-through	1 in.	10 Cv	8.57 Kv	78 psi at 13 psi	3 psi to 8 psi	21 kPa to 55 kPa	For Water: 115°F to 240°F; For Steam: 212°F to 275°F; Maximum Actuator Temperature – 160°F; Maximum Temperature Differential 140°F for Water	5 to 95% RH
VP512A1742/U	Two-way, Right Angle	1 in.	10 Cv	8.57 Kv	78 psi at 13 psi	3 psi to 8 psi	21 kPa to 55 kPa	For Steam: 212°F to 275°F; For Water: 115°F to 240°F; Maximum Actuator Temperature – 160°F; Maximum Temperature Differential 140°F for Water	
VP512A1742S/U	Two-way, Right Angle	1 in.	10 Cv	8.57 Kv	78 psi at 13 psi	3 psi to 8 psi	21 kPa to 55 kPa	For Steam: 212°F to 275°F; For Water: 115°F to 240°F; Maximum Actuator Temperature – 160°F; Maximum Temperature Differential 140°F for Water	
VP512A1767/U	Two-way, Straight-through	1 1/4 in.	16 Cv	13.7 Kv	40 psi at 13 psi	3 psi to 8 psi	21 kPa to 55 kPa	For Steam: 212°F to 275°F; For Water: 115°F to 240°F; Maximum Actuator Temperature – 160°F; Maximum Temperature Differential 140°F for Water	
VP512A1783/U	Two-way, Right Angle	1 1/4 in.	16 Cv	13.7 Kv	40 psi at 13 psi	3 psi to 8 psi	21 kPa to 55 kPa	For Steam: 212°F to 275°F; For Water: 115°F to 240°F; Maximum Actuator Temperature – 160°F; Maximum Temperature Differential 140°F for Water	

Dimensions Diagram in inches (millimeters)

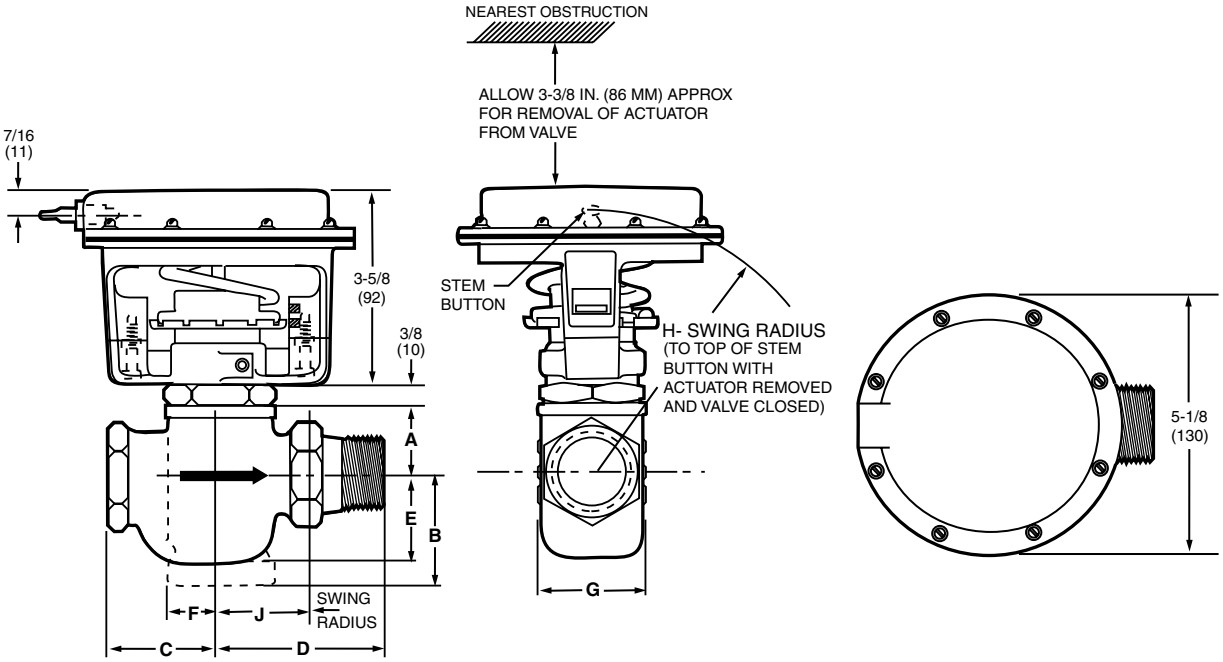

VALVE SIZE	BODY TYPE	A	B	C	D	E	F	G	H	J
1	STRAIGHT	1-3/8 (35)	---	2-1/4 (57)	3 (76)	1-5/8 (41)	---	1-31/32 (50)	4-1/2 (114)	---
	ANGLE	1-3/8 (35)	2-1/8 (54)	---	3 (76)	---	1-1/16 (27)	1-31/32 (50)	---	1-29/32 (48)
1 1/4	STRAIGHT	1-9/16 (40)	---	2-1/2 (64)	3-3/4 (95)	1-1/2 (38)	---	2-9/16 (65)	4-13/16 (122)	---
	ANGLE	1-9/16 (40)	2-1/8 (54)	---	3-3/4 (95)	---	1-3/16 (30)	2-9/16 (65)	---	2-15/32 (63)
1 1/2	STRAIGHT	1-11/16 (43)	---	2-7/8 (73)	4-1/4 (108)	1-3/8 (35)	---	3-9/32 (83)	5-5/32 (131)	---
	ANGLE	1-11/16 (43)	2-1/8 (54)	---	4-1/4 (108)	---	1-3/8 (35)	3-9/32 (83)	---	2-15/16 (75)

M18805A

Close-off Ratings at various Branchline Pressures

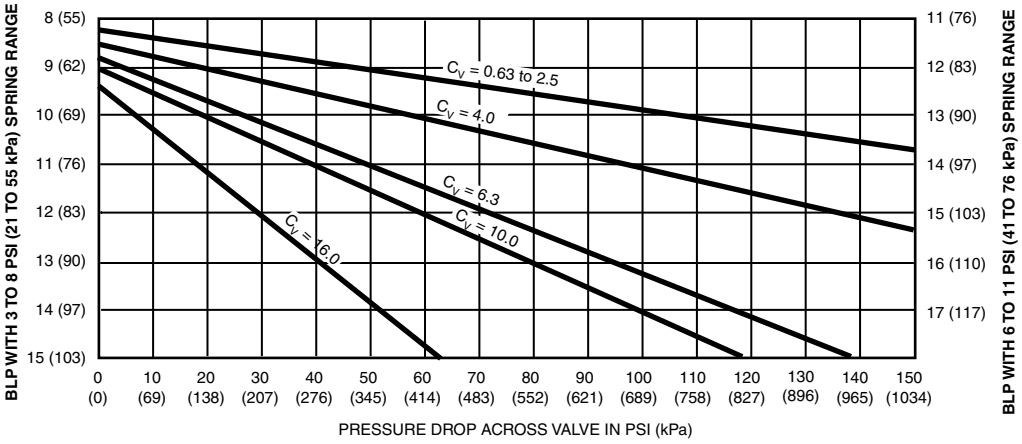

CLOSE-OFF RATINGS AT VARIOUS BRANCH LINE PRESSURES

M18956B

VP513 Pneumatic Water Valve

Single-seated, straight-through, pneumatic valves used for proportional control of unit air conditioners using hot and/or chilled water. Replacement devices are available for Johnson, Powers, Robertshaw, Barber-Colman, and older Honeywell devices.

- Available in normally-open (A models) or normally-closed models (B models).
- Straight-through pattern.
- Rotating actuator for aligning air connection with control air piping.
- Molded replaceable composition disc for tight shut-off.
- Flare tube connections.
- Small physical size.

Valve Type: Unitary
Connection Type: 45 deg. SAE flare
Body Pressure (psi): 250 psi
Body Pressure (kPa): 1724 kPa
Maximum Diaphragm Pressure (psi): 25 psi
Maximum Diaphragm Pressure (kPa): 172 kPa
Air Connections: 1/8 in. NPT
Controlled Fluid: Water
Operating Humidity Range (% RH): 5 to 95% RH

Accessories
310135/U – Packing Spring, 1 Required
310143/U – Black Packing, 3 required
312817T/U – Actuator assembly, 3 to 10 psi, 21 to 69 kPa, and 1/2 in. stroke
312817U/U – Actuator Assembly, 3 to 7 psi, 21 to 48 kPa, and 1/2 in. stroke
312817V/U – Actuator Assembly, 8 to 12 psi, 55 to 83 kPa, and 1/2 in. stroke

Material Number	Valve Action	Connection Size (in.)	Capacity (Cv)	Capacity (Kv)	Close-off Ratings at Branch Line Pressure	Spring Range (psi)	Spring Range (kPa)	Temperature Range	Dimensions
Two-way, Straight-through									
VP513A1048/U	Proportional Normally Open	O.D.: 7/8 in.; Nominal: 3/4 in.	2.5 Cv	2.16 Kv	79 psid (545 kPa) at 13 psi (90 kPa)	3 psi to 10 psi	21 kPa to 69 kPa	35°F to 250°F; Maximum Actuator Temperature – 160°F (2°C to 121°C; Maximum Actuator Temperature – 71°C)	5 3/4 in. high x 5 1/8 in. diameter (146 mm high x 130 mm diameter)
VP513A1055/U	Proportional Normally Open	O.D.: 7/8 in.; Nominal: 3/4 in.	4 Cv	3.46 Kv	79 psid (545 kPa) at 13 psi (90 kPa)	3 psi to 10 psi	21 kPa to 69 kPa	35°F to 250°F; Maximum Actuator Temperature – 160°F (2°C to 121°C; Maximum Actuator Temperature – 71°C)	5 3/4 in. high x 5 1/8 in. diameter (146 mm high x 130 mm diameter)
VP513A1188/U	Proportional Normally Open	O.D.: 5/8 in.; Nominal: 1/2 in.	2.5 Cv	2.16 Kv	79 psid (545 kPa) at 13 psi (90 kPa)	3 psi to 7 psi	21 kPa to 48 kPa	35°F to 250°F; Maximum Actuator Temperature – 160°F (2°C to 121°C; Maximum Actuator Temperature – 71°C)	5 3/4 in. high x 5 1/8 in. diameter (146 mm high x 130 mm diameter)
VP513A1204/U	Proportional Normally Open	O.D.: 5/8 in.; Nominal: 1/2 in.	2.5 Cv	2.16 Kv	79 psid (545 kPa) at 13 psi (90 kPa)	3 psi to 10 psi	21 kPa to 69 kPa	35°F to 250°F; Maximum Actuator Temperature – 160°F (2°C to 121°C; Maximum Actuator Temperature – 71°C)	5 3/4 in. high x 5 1/8 in. diameter (146 mm high x 130 mm diameter)
Two-way, Straight-through, Offset									
VP513B1012/U	Proportional Normally Closed	O.D.: 5/8 in.; Nominal: 1/2 in.	1.0 Cv	0.86 Kv	50 psid (345 kPa) at 7 psi (48 kPa)	9 psi to 13 psi	62 kPa to 90 kPa	40°F to 240°F; Maximum Actuator Temperature – 160°F (4°C to 116°C; Maximum Actuator Temperature – 71°C)	6 7/8 in. high x 5 1/8 in. diameter (175 mm high x 130 mm diameter)
VP513B1038/U	Proportional Normally Closed	O.D.: 5/8 in.; Nominal: 1/2 in.	1.6 Cv	1.38 Kv	50 psid (345 kPa) at 7 psi (48 kPa)	9 psi to 13 psi	62 kPa to 90 kPa	40°F to 240°F; Maximum Actuator Temperature – 160°F (4°C to 116°C; Maximum Actuator Temperature – 71°C)	6 7/8 in. high x 5 1/8 in. diameter (175 mm high x 130 mm diameter)
VP513B1053/U	Proportional Normally Closed	O.D.: 5/8 in.; Nominal: 1/2 in.	2.5 Cv	2.16 Kv	50 psid (345 kPa) at 7 psi (48 kPa)	9 psi to 13 psi	62 kPa to 90 kPa	40°F to 240°F; Maximum Actuator Temperature – 160°F (4°C to 116°C; Maximum Actuator Temperature – 71°C)	6 7/8 in. high x 5 1/8 in. diameter (175 mm high x 130 mm diameter)

Dimensions Diagram in inches (millimeters)

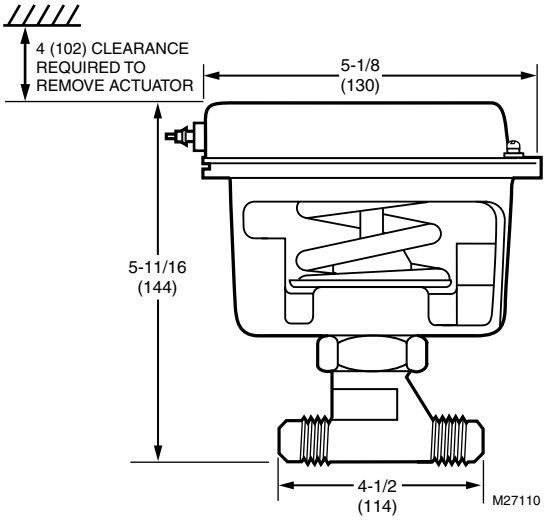

VP513 Typical Piping Diagram

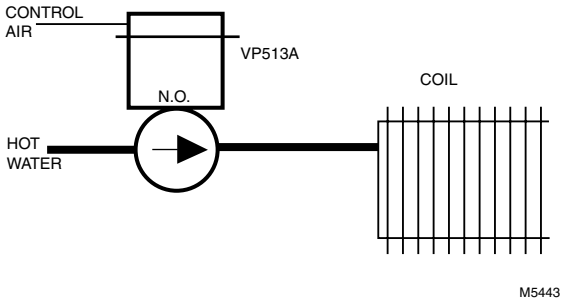

Dimensions Diagram in inches (millimeters)

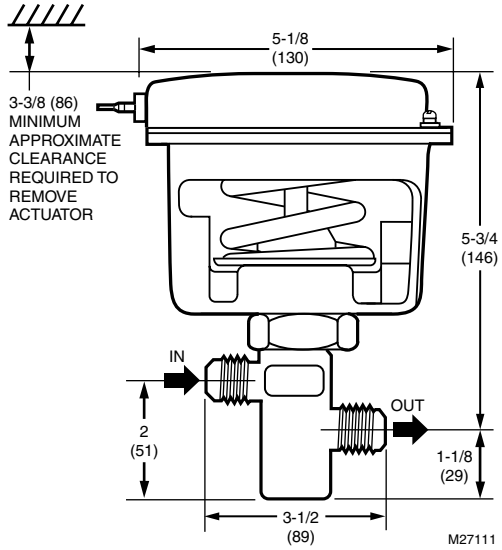

VP519 Two-Position Three-Way Air Valve

Two-position, three-way, pneumatic air valve used to control main airflow in large Day-Nite or Summer-Winter pneumatic control systems. Replacement device is available for Johnson, Powers, Robertshaw, Barber-Colman, and older Honeywell devices.

- Spring-loaded, self-adjusting Teflon™ cone packing.
- Removable composition upper and lower discs.
- Actuator can be rotated on valve bonnet for alignment with air piping.
- Right-angle mounting bracket permits mounting on a wall or panel.
- Cast bronze body, 1/4" stroke.

Dimensions Diagram in inches (millimeters)

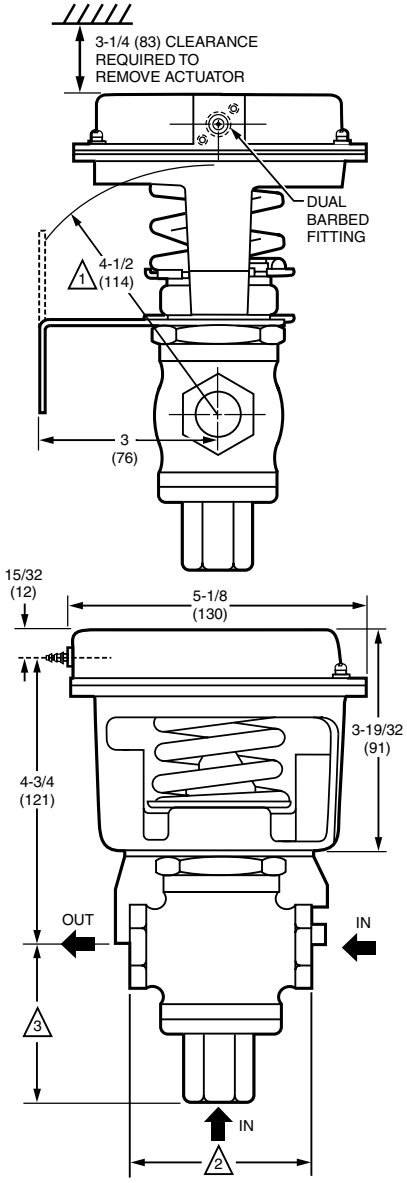

1 SWING RADIUS TO TOP OF STEM BUTTON WHEN DISC IS ON LOWER SEAT AND OPERATOR IS REMOVED.

VALVE SIZE	2	3
1/2 INCH	3-1/8 (79)	2-3/4 (70)
3/4 INCH	3-3/8 (86)	2-19/32 (66)

M27109

Valve Action: Two Position
Valve Type: Globe Valve
Connection Type: NPT
Body Pressure (psi): 150 psi
Body Pressure (kPa): 1034 kPa
Maximum Diaphragm Pressure (psi): 25 psi
Maximum Diaphragm Pressure (kPa): 172 kPa
Dimensions: 7 7/8 in. high x 5 1/8 in. diameter (200 mm high x 130 mm diameter)
Temperature Range: 35°F to 115°F; Maximum Actuator Temperature – 160°F (2°C to 46°C; Maximum Actuator Temperature – 71°C)
Air Connections: Dual barbed for 5/32 in. or 1/4 in. plastic tubing
Operating Humidity Range (% RH): 5 to 95% RH

Replacement Parts
313744A/U – Actuator Replacement Assembly for the VP519 Valve

VP519 Typical Piping Diagram

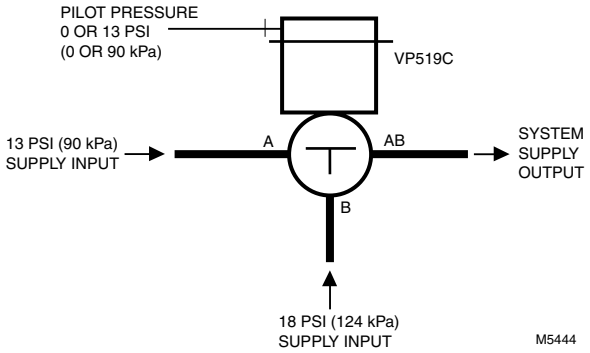

Close-off Ratings for the VP519

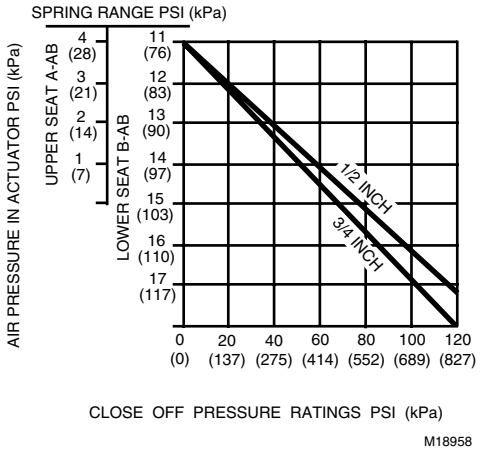

Material Number	Body Pattern	Connection Size (in.)	Capacity (Cv)	Capacity (Kv)	Close-off Ratings at Branch Line Pressure	Spring Range (psi)	Spring Range (kPa)
VP519C1006/U	Three-way	1/2 in.	5.5 Cv	4.75 Kv	120 psid at 18 psi	6 psi to 9 psi	41 kPa to 62 kPa

VP522 Pneumatic Sequencing Water Valve

Three-pipe, sequencing, pneumatically operated water valve for controlling both hot and cold water flow in fan-coil and induction units. Replacement devices are available for Johnson, Powers, Robertshaw, Barber-Colman, and older Honeywell devices.

- Corrosion resistant.
- Molded-in composition discs for tight shutoff.
- Flare connections for easy installation.
- Operator rotates 360 degrees for convenient air piping alignment.

Valve Type: Unitary
Connection Type: 45 deg. SAE flare
Body Pressure (psi): 250 psi
Body Pressure (kPa): 1724 kPa
Maximum Diaphragm Pressure (psi): 25 psi
Maximum Diaphragm Pressure (kPa): 172 kPa
Dimensions: 9 7/8 in. high x 5 1/8 in. diameter (257 mm high x 130 mm diameter)
Temperature Range: 35°F to 250°F; Maximum Actuator Temperature – 160°F (2°C to 121°C; Maximum Actuator Temperature – 71°C)
Air Connections: 1/8 in. NPT
Controlled Fluid: Water
Operating Humidity Range (% RH): 5 to 95% RH

Replacement Parts

312817S/U – Actuator assembly for VP522A1237, VP522A1039, or VP522A1047
312817W/U – Actuator assembly for VP522B1003
312817Y/U – Actuator assembly for VP522B1011 or VP522B1029
313824A/U – Rebuild Kit, include Stem and Disc Holder, Button with Screw for VP522A1005
314459A/U – Rebuild Kit, include Stem and Disc Holder, Button with Screw for VP522A1039
314459B/U – Rebuild kit, includes stem and disc holder, Button with screw for VP522A1047
315407A/U – Rebuild kit, include Stem and Disc holder, button with screw for VP522B1003

Material Number	Connection Size (in.)	Capacity (Cv)	Capacity (Kv)	Close-off Ratings at Branch Line Pressure	Spring Range (psi)	Spring Range (kPa)	Valve Action
Three-way Diverting, Sequencing							
VP522B1003/U	O.D.: 1/2 in.; Nominal: 3/8 in.	Port A: 1.5 Cv, Port B: 1.5 Cv	Port A: 1.3 Kv, Port B: 1.3 Kv	15 psid at 13 psi	Adjustable	Adjustable	Diverting/Sequencing
VP522B1011/U	O.D.: 5/8 in.; Nominal: 1/2 in.	Port A: 2.5 Cv, Port B: 2.5 Cv	Port A: 2.2 Kv, Port B: 2.2 Kv	15 psid at 13 psi	Adjustable	Adjustable	Diverting/Sequencing
VP522B1029/U	O.D.: 7/8 in.; Nominal: 3/4 in.	Port A: 4 Cv, Port B: 3.5 Cv	Port A: 3.5 Kv, Port B: 3.0 Kv	15 psid at 13 psi	Adjustable	Adjustable	Diverting/Sequencing
Three-way Mixing							
VP522A1005/U	O.D.: 1/2 in.; Nominal: 3/8 in.	Port A: 1.5 Cv, Port B: 1.5 Cv	Port A: 1.3 Kv, Port B: 1.3 Kv	50 psid at 13 psi	3 psi to 11.5 psi	21 kPa to 79 kPa	Proportional/Sequencing
VP522A1039/U	O.D.: 5/8 in.; Nominal: 1/2 in.	Port A: 2.5 Cv, Port B: 1.6 Cv	Port A: 2.2 Kv, Port B: 1.4 Kv	50 psid at 13 psi	2 psi to 13 psi	14 kPa to 90 kPa	Proportional/Sequencing
VP522A1047/U	O.D.: 7/8 in.; Nominal: 3/4 in.	Port A: 4 Cv, Port B: 2.5 Cv	Port A: 3.5 Kv, Port B: 2.2 Kv	45 psid at 13 psi	2 psi to 13 psi	14 kPa to 90 kPa	Proportional/Sequencing

Dimensions Diagram in inches (millimeters)

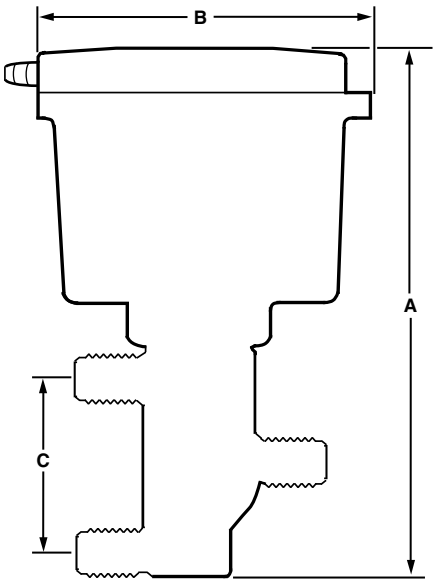

VALVE SIZE	A IN INCHES (mm)	B IN INCHES (mm)	C IN INCHES (mm)
3/8 IN.	9-13/16 (249)	5-1/8 (130)	3-5/8 (92)
1/2 IN.	9-15/16 (252)	5-1/8 (130)	3-5/32 (80)
3/4 IN.	9-15/16 (252)	5-1/8 (130)	3-5/32 (80)

C4671A

Operating Sequence on Control Air Pressure Increase

VP522A 3/8 IN.	VP522A 1/2 IN. & 3/4 IN.	AIR PRESSURE psi (kPa)	VP522B ALL SIZES
HOT PORT OPEN 100%	HOT PORT OPEN 100%	0 (0)	HOT PORT OPEN 100%
		1 (7)	
		2 (14)	
HOT PORT CLOSES	HOT PORT CLOSES	3 (21)	
		4 (28)	
		5 (34)	HOT PORT CLOSES
		6 (41)	
BOTH PORTS CLOSED	BOTH PORTS CLOSED	7 (48)	
		8 (55)	BOTH PORTS CLOSED
		9 (62)	COLD PORT OPENS
COLD PORT OPENS		10 (69)	COLD PORT OPEN 100%
	COLD PORT OPENS	11 (76)	
		12 (83)	
COLD PORT OPEN 100%		13 (90)	
	COLD PORT OPEN 100%	14 (97)	
		15 (103)	

M13864

Typical VP522 Operation Diagram

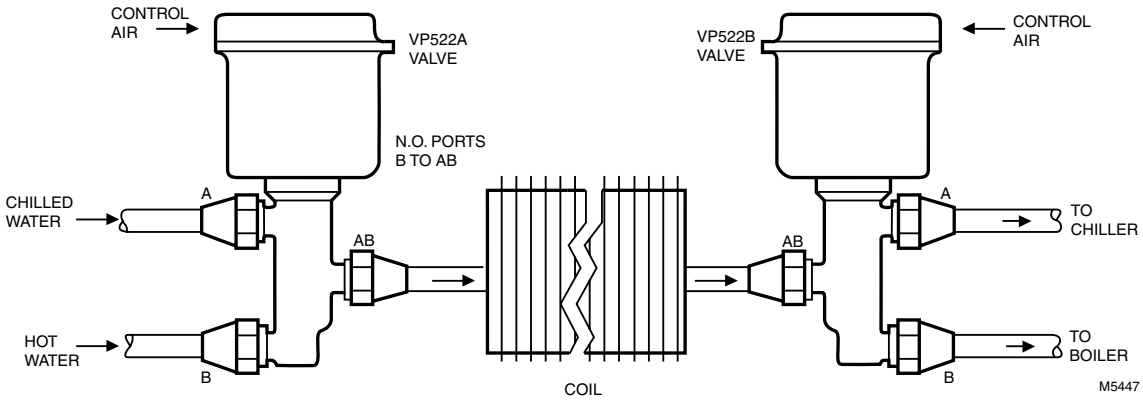

VP525C Pneumatic Radiator Valve

Normally-open, single-seated pneumatic radiator valve, with straight through or angle body construction provides proportional control of two-pipe, hot water or steam systems. Replacement devices are available for most models.

- Available in several capacities and spring ranges for various application requirements.
- Easily replaceable actuator assembly for convenience of service.
- Compact size for installation where space is limited.
- Can be repacked without shutting down system.

Body Pattern: Two-way
Spring Range (psi): 3 psi to 10 psi
Spring Range (kPa): 21 kPa to 69 kPa
Valve Action: Proportional Normally Open
Valve Type: Unitary
Body Pressure (psi): 150 psi
Body Pressure (kPa): 1034 kPa
Maximum Diaphragm Pressure (psi): 30 psi
Maximum Diaphragm Pressure (kPa): 205 kPa
Dimensions: 4 7/8 in. high x 3 3/4 in. wide (124 mm high x 92 mm wide)
Temperature Range: 40°F to 240°F; Maximum Safe Actuator Diaphragm Temperature – 230°F (4°C to 116°C; Maximum Safe Actuator Diaphragm Temperature – 110°C)
Air Connections: Push on for 1/4 in. O.D. plastic tubing
Controlled Fluid: Water, Steam
Operating Humidity Range (% RH): 5 to 95% RH
Includes: 2-5 psi spring is packed in box

Accessories

14003648-001/U – Vandalism Resistant Assembly, Cover assembly with 1/8 in NPT air Connection and push-in retainer to replace standard Cover
14004932-001/U – Pneumatic Valve Adapter (M6410/M7410 linkage and a green main spring to allow to retrofit an electric actuator)

Replacement Parts

14002560-007/U – Repair stem assembly for 1/2 inch, 2.0 Cv VP525C or to Upgrade, 2.0 Cv VP525A
14002560-009/U – Repair stem assembly for 3/4 inch, 5.0 Cv VP525C or to Upgrade, 5.0 Cv VP525A
14002560-013/U – Repair stem assembly for 1/2 inch, 0.63 Cv VP525C or to Upgrade, 0.63 Cv VP525A
14003299-001/U – Repair Top & Insert for 5/8 in. OD, 1.6 Cv VP525A solder body
14003300-001/U – Repair Top & Insert for 7/8 in. OD, 2.5 Cv VP525A solder body
14004897-001/U – Repair Top & Insert for 1/2 inch NPT, 0.63 Cv VP525C or to upgrade 1/2 NPT, 0.63 Cv VP525A
14004897-002/U – Repair Top & Insert for 1/2 inch NPT, 2.0 Cv VP525C or to upgrade 1/2 NPT, 2.0 Cv VP525A
14004897-003/U – Repair Top & Insert for 3/4 inch NPT, 3.0 Cv VP525C or to upgrade 3/4 NPT, 3.0 Cv VP525A
14004897-004/U – Repair Top & Insert for 3/4 inch NPT, 5.0 Cv VP525C or to upgrade 3/4 NPT, 5.0 Cv VP525A
310208/U – White Packing (3 required per valve)
316027/0042/U – Green Spring, 2 to 5 psi

Material Number	Connection Type	Connection Size (in.)	Capacity (Cv)	Capacity (Kv)	Close-off Ratings at Branch Line Pressure	Comments
VP525C1008/U	NPT- Straight Male Union	1/2 in.	0.63 Cv	0.54 Kv	150 psid (1034 kPa) at 20 psi (138 kPa)	Replacement for VP525A1408
VP525C1016/U	NPT- Straight Male Union	1/2 in.	2 Cv	1.73 Kv	110 psid (759 kPa) at 20 psi (138 kPa)	Replacement for VP525A1077 and VP525A1416
VP525C1024/U	NPT- Straight Male Union	3/4 in.	3 Cv	2.59 Kv	55 psid (379 kPa) at 20 psi (138 kPa)	Replacement for VP525A1150
VP525C1032/U	NPT- Straight Male Union	3/4 in.	5 Cv	4.32 Kv	42 psid (290 kPa) at 20 psi (138 kPa)	Replacement for VP525A1192 and VP525A1200
VP525C1040/U	NPT- Angle Male union	1/2 in.	2 Cv	1.73 Kv	110 psid (759kPa) at 20 psi (138 kPa)	Replacement for VP525A1085
VP525C1057/U	NPT- Angle Male union	3/4 in.	3 Cv	2.59 Kv	55 psid (379 kPa) at 20 psi (138 kPa)	Replacement for VP525A1168
VP525C1065/U	NPT- Angle Male union	3/4 in.	5 Cv	4.32 Kv	42 psid (290 kPa) at 20 psi (138 kPa)	Replacement for VP525A1218 and VP525A1226
VP525C1073/U	NPT- Straight Male Union	1/2 in.	3 Cv	2.59 Kv	55 psid (379 kPa) at 20 psi (138 kPa)	Replacement for VP525A1101 and VP525A1119
VP525C1081/U	NPT- Angle Male union	1/2 in.	3 Cv	2.59 Kv	55 psid (379 kPa) at 20 psi (138 kPa)	Replacement for VP525A1127 and VP525A1135

Dimensions Diagram in inches (millimeters)

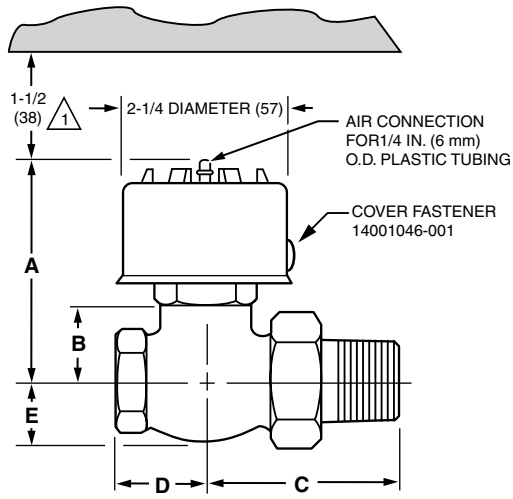

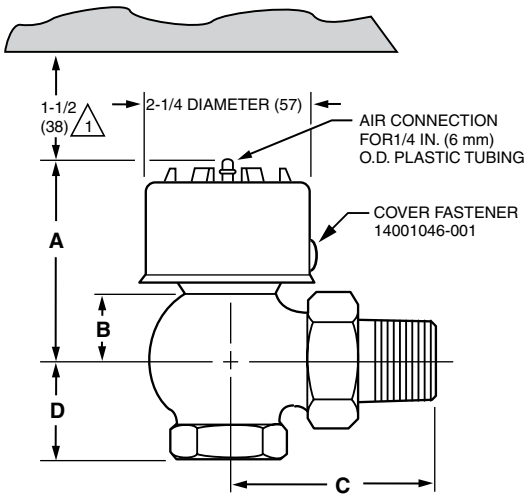

1 1-1/2 in. (38 mm) MINIMUM CLEARANCE TO REMOVE ACTUATOR. 2 1/2 in. (63 mm) MINIMUM CLEARANCE TO FACILITATE STRAIGHT ON TUBING CONNECTION. IF CLEARANCE IS LESS THAN 2 1/2 in. (63 mm) USE AN ELBOW.

BODY STYLE	SIZE NPT	A	B	C	D	E
STRAIGHT THRU – MALE UNION OUTLET	1/2	3-1/2 (90)	1-3/8 (35)	2-1/2 (63)	1-3/8 (35)	3/4 (19)
	3/4	3-1/2 (90)	1-3/8 (35)	3 (76)	1-5/8 (41)	1-1/8 (29)
ANGLE – MALE UNION OUTLET	1/2	3-1/4 (83)	1 (25)	2-5/8 (66)	1-1/8 (29)	
	3/4	3-1/8 (80)	1 (25)	3 (76)	1-1/4 (32)	

M16449B

VP525C Pneumatic Radiator Valve

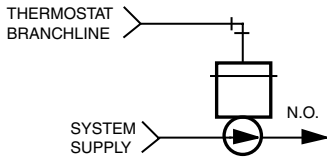

C4654

Close-off Ratings at various Control Air Pressures

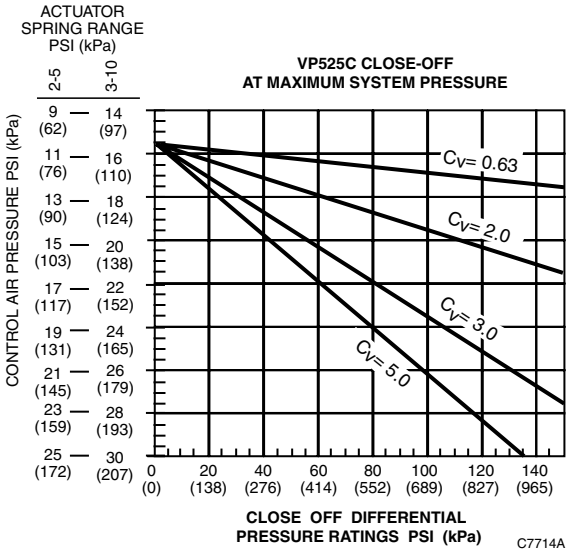

C7714A

VP526 Three-Way High Pressure Water Valve

Three-way pneumatic mixing valve provides proportional control of hot and/or cold water in unit air conditioners and fan coil systems. Replacement devices are available for Johnson, Powers, Robertshaw, Barber-Colman, and older Honeywell devices.

- Small size permits installation where space is limited.
- Direct-acting, rolling diaphragm actuator with integral high temperature plastic air connector for 1/4 in. (6-mm) O.D. plastic tubing.
- Spring loaded, self-adjusting Buna-N “V”-ring packing replaceable.
- Brass seats (integral lower, removable upper) and contoured plug provide metal-to-metal seating.
- Stainless steel stem.
- Linear and constant total flow throughout full plug travel.

Body Pattern: Three-way Mixing
Valve Action: Proportional Normally Open Ports B to AB
Valve Type: Unitary
Connection Type: 45 deg. SAE flare
Body Pressure (psi): 250 psi
Body Pressure (kPa): 1724 kPa
Maximum Diaphragm Pressure (psi): 29 psi
Maximum Diaphragm Pressure (kPa): 200 kPa
Dimensions: 4 7/8 in. high x 3 1/8 in. wide (124 mm high x 79 mm wide)
Temperature Range: 35°F to 250°F; Maximum Safe Actuator Diaphragm Temperature – 230°F (2°C to 121°C; Maximum Safe Actuator Diaphragm Temperature – 110°C)
Air Connections: Push on for 1/4 in. O.D. plastic tubing
Controlled Fluid: Water
Operating Humidity Range (% RH): 5 to 95% RH

Accessories
14003648-001/U – Vandalism Resistant Assembly, Cover assembly with 1/8 in. NPT air Connection and push-in retainer to replace standard Cover

Replacement Parts
14003102-001/U – Replacement Top Assembly
14003297-001/U – Valve repack kit for VP526A, VP527A, or VP531A valves with 3/16 inch stem
315917/U – Diaphragm

Material Number	Connection Size (in.)	Capacity (Cv)	Capacity (Kv)	Close-off Ratings at Branch Line Pressure	Spring Range (psi)	Spring Range (kPa)
VP526A1001/U	O.D.: 5/8 in.; Nominal: 1/2 in.	1.6 Cv	1.38 Kv	14 psid at 0 psi for Port A, 50 psid at 17 psi for Port B	3 psi to 10 psi	21 kPa to 69 kPa
VP526A1019/U	O.D.: 5/8 in.; Nominal: 1/2 in.	2.5 Cv	2.16 Kv	14 psid at 0 psi for Port A, 50 psid at 17 psi for Port B	3 psi to 10 psi	21 kPa to 69 kPa
VP526A1027/U	O.D.: 5/8 in.; Nominal: 1/2 in.	1.6 Cv	1.38 Kv	5 psid at 0 psi for Port A, 50 psid at 12 psi for Port B	2 psi to 5 psi	14 kPa to 34 kPa
VP526A1035/U	O.D.: 5/8 in.; Nominal: 1/2 in.	2.5 Cv	2.16 Kv	5 psid at 0 psi for Port A, 50 psid at 12 psi for Port B	2 psi to 5 psi	14 kPa to 34 kPa
VP526A1043/U	O.D.: 5/8 in.; Nominal: 1/2 in.	1.6 Cv	1.38 Kv	58 psid at 0 psi for Port A, 50 psid at 18 psi for Port B	8 psi to 11 psi	55 kPa to 76 kPa
VP526A1050/U	O.D.: 5/8 in.; Nominal: 1/2 in.	2.5 Cv	2.16 Kv	58 psid at 0 psi for Port A, 50 psid at 18 psi for Port B	8 psi to 11 psi	55 kPa to 76 kPa
VP526A1068/U	O.D.: 1/2 in.; Nominal: 3/8 in.	1.0 Cv	0.86 Kv	14 psid at 0 psi for Port A, 50 psid at 17 psi for Port B	3 psi to 10 psi	21 kPa to 69 kPa
VP526A1076/U	O.D.: 1/2 in.; Nominal: 3/8 in.	1.6 Cv	1.38 Kv	14 psid at 0 psi for Port A, 50 psid at 17 psi for Port B	3 psi to 10 psi	21 kPa to 69 kPa
VP526A1084/U	O.D.: 1/2 in.; Nominal: 3/8 in.	1.0 Cv	0.86 Kv	5 psid at 0 psi for Port A, 50 psid at 12 psi for Port B	2 psi to 5 psi	14 kPa to 34 kPa
VP526A1092/U	O.D.: 1/2 in.; Nominal: 3/8 in.	1.6 Cv	1.38 Kv	5 psid at 0 psi for Port A, 50 psid at 12 psi for Port B	2 psi to 5 psi	14 kPa to 34 kPa
VP526A1100/U	O.D.: 1/2 in.; Nominal: 3/8 in.	1.0 Cv	0.86 Kv	58 psid at 0 psi for Port A, 50 psid at 18 psi for Port B	8 psi to 11 psi	55 kPa to 76 kPa
VP526A1118/U	O.D.: 1/2 in.; Nominal: 3/8 in.	1.6 Cv	1.38 Kv	58 psid at 0 psi for Port A, 50 psid at 18 psi for Port B	8 psi to 11 psi	55 kPa to 76 kPa

Dimensions Diagram in inches (millimeters)

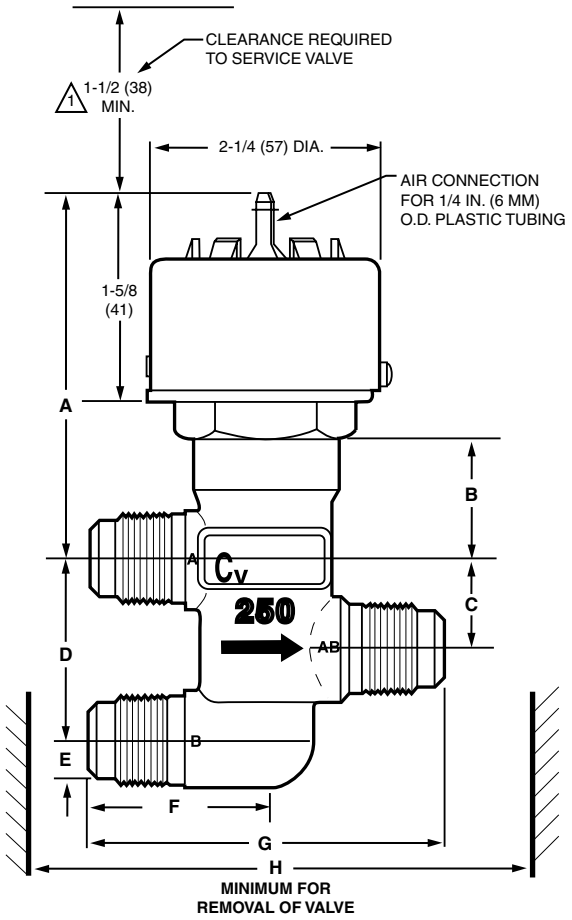

VALVE SIZE	COPPER TUBING (O.D.)	IN. (MM)							
		A	B	C	D	E	F	G	H
3/8	1/2	3-1/16 (78)	7/8 (22)	13/16 (20)	1-1/2 (38)	3/8 (10)	1-1/2 (38)	3 (76)	5-3/4 (146)
1/2	5/8	3-3/8 (85)	1-3/16 (30)	7/8 (22)	1-3/4 (44)	7/16 (11)	1-11/16 (43)	3-7/16 (87)	6-1/4 (159)

1 ALLOW 1-1/2 IN. (38 MM) MINIMUM CLEARANCE FOR REMOVING ACTUATOR. ALLOW 2-1/2 IN. (63 MM) TO FACILITATE STRAIGHT ON TUBING. IF CLEARANCE IS LESS THAN 2-1/2 IN. (63 MM), USE AN ELBOW.

M18807A

VP526 Typical Piping Diagram

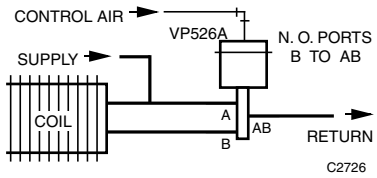

Close-off Ratings for the VP526

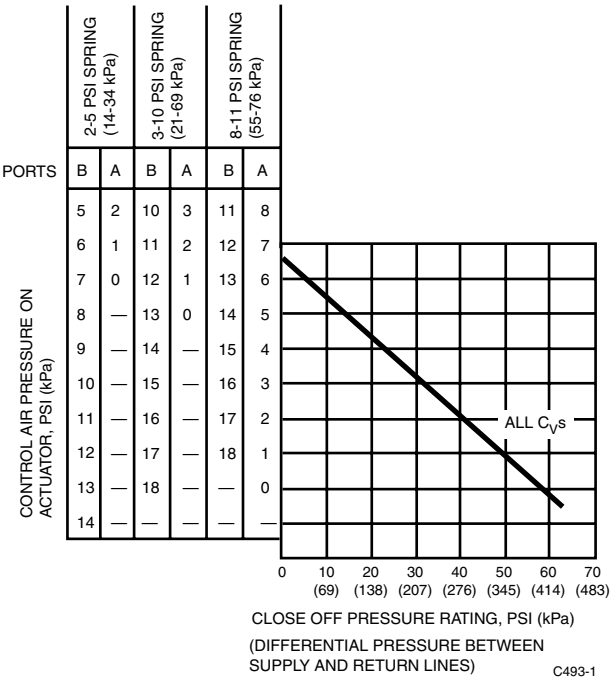

VP527 Pneumatic Water Valve

Normally open, single-seated, high pressure valve, provides proportional control of hot/cold water in air conditioner and fan coil units. Replacement devices are available for Johnson, Powers, Robertshaw, Barber-Colman, and older Honeywell devices.

- Small size permits installation where space is limited.
- Forged brass, straight-through body with end connections threaded for 45 degrees SAE flare fitting nuts.
- Spring-loaded, self-adjusting, Buna-N “V”-ring packing is replaceable without shutting system down.
- High-temperature rolling diaphragm actuator (aluminum cover) and high-temperature plastic diaphragm retaining cup with integral air connection for 1/4 in. (6 mm) O.D. plastic tubing.
- Integral seat and brass plug with removable composition disc provides equal percentage flow.
- Stainless steel stem, 3/16 in. (5 mm) diameter.

Body Pattern: Two-way
Valve Action: Proportional Normally Open
Valve Type: Unitary
Connection Type: 45 deg. SAE flare
Body Pressure (psi): 250 psi
Body Pressure (kPa): 1724 kPa
Maximum Diaphragm Pressure (psi): 30 psi
Maximum Diaphragm Pressure (kPa): 205 kPa
Dimensions: 4 1/8 in. high x 3 1/8 in. wide (105 mm high x 79 mm wide)
Temperature Range: 35°F to 250°F; Maximum Safe Actuator Diaphragm Temperature – 230°F (2°C to 121°C; Maximum Safe Actuator Diaphragm Temperature – 110°C)
Air Connections: Push on for 1/4 in. O.D. plastic tubing
Controlled Fluid: Water
Operating Humidity Range (% RH): 5 to 95% RH

Accessories

14003648-001/U – Vandalism Resistant Assembly, Cover assembly with 1/8 in. NPT air Connection and push-in retainer to replace standard Cover
14004932-001/U – Pneumatic Valve Adapter (M6410/M7410 linkage and a green main spring to allow to retrofit an electric actuator)

Replacement Parts

14003102-001/U – Replacement Top Assembly
14003297-001/U – Valve repack kit for VP526A, VP527A, or VP531A valves with 3/16 inch stem
14003475-001/U – Valve rebuild kit for 1/2 in. valve with 0.4 or 0.63 Cv
14003476-001/U – Valve rebuild kit for 1/2 in. valve with 1 or 1.6 Cv
315917/U – Diaphragm

Dimensions Diagram in inches (millimeters)

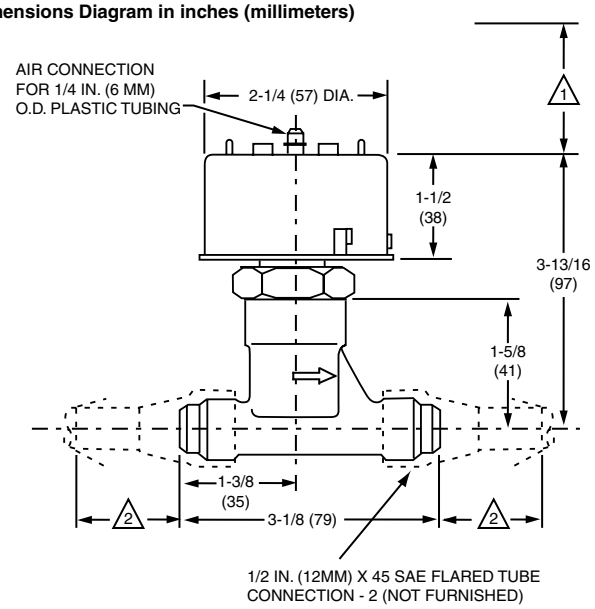

1 ALLOW 1-1/2 IN. (38 MM) MINIMUM CLEARANCE TO SERVICE VALVE, 2-1/2 IN. (63 MM) CLEARANCE TO CONNECT TUBING STRAIGHT TO CONNECTOR. IF CLEARANCE IS LESS THAN 2-1/2 IN. (63 MM), USE AN ELBOW CONNECTOR.

2 ALLOW 1-3/8 IN. (35 MM) MINIMUM CLEARANCE TO REMOVE VALVE.

M18348A

VP527 Typical Piping Diagram

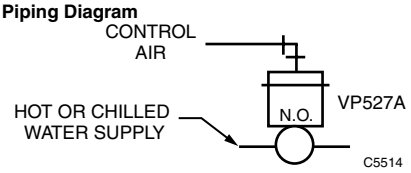

Close-off Ratings vs. Control Air Pressure

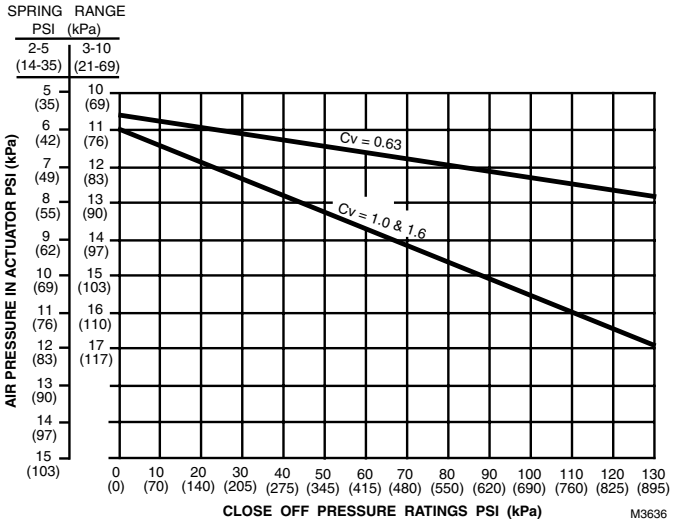

Material Number	Connection Size (in.)	Capacity (Cv)	Capacity (Kv)	Close-off Ratings at Branch Line Pressure	Spring Range (psi)	Spring Range (kPa)
VP527A1018/U	O.D.: 1/2 in.; Nominal: 3/8 in.	0.63 Cv	0.54 Kv	130 psid at 13 psi	3 psi to 10 psi	21 kPa to 69 kPa
VP527A1026/U	O.D.: 1/2 in.; Nominal: 3/8 in.	1.0 Cv	0.86 Kv	45 psid at 13 psi	3 psi to 10 psi	21 kPa to 69 kPa
VP527A1034/U	O.D.: 1/2 in.; Nominal: 3/8 in.	1.6 Cv	1.38 Kv	45 psid at 13 psi	3 psi to 10 psi	21 kPa to 69 kPa
VP527A1059/U	O.D.: 1/2 in.; Nominal: 3/8 in.	0.63 Cv	0.54 Kv	130 psid at 8 psi	2 psi to 5 psi	14 kPa to 34 kPa
VP527A1067/U	O.D.: 1/2 in.; Nominal: 3/8 in.	1.0 Cv	0.86 Kv	45 psid at 8 psi	2 psi to 5 psi	14 kPa to 34 kPa
VP527A1075/U	O.D.: 1/2 in.; Nominal: 3/8 in.	1.6 Cv	1.38 Kv	45 psid at 8 psi	2 psi to 5 psi	14 kPa to 34 kPa

VP531C Pneumatic Terminal Unit Valve

Normally-open, single-seated valve provides proportional control of steam or hot or cold water in terminal units. Replacement devices are available for Johnson, Powers, Robertshaw, Barber-Colman, and older Honeywell devices.

- Available in several capacities and spring ranges for various application requirements.
- Easily replaceable actuator assembly for convenience of service.
- Compact size for use inside most unit enclosures.

Body Pattern: Two-way
Spring Range (psi): 2 psi to 5 psi
Spring Range (kPa): 14 kPa to 34 kPa
Valve Action: Proportional Normally Open
Valve Type: Unitary
Body Pressure (psi): 150 psi
Body Pressure (kPa): 1034 kPa
Maximum Diaphragm Pressure (psi): 30 psi
Maximum Diaphragm Pressure (kPa): 205 kPa
Temperature Range: 40°F to 240°F (140°F max difference, alternating hot and cold water service); Maximum Safe Actuator Diaphragm Temperature – 230°F (4°C to 116°C [78 K max difference, alternating hot and cold water service]; Maximum Safe Actuator Diaphragm Temperature – 110°C)
Air Connections: Push on for 1/4 in. O.D. plastic tubing
Controlled Fluid: Water, Steam
Operating Humidity Range (% RH): 5 to 95% RH
Includes: 3-10 psi spring is packed in box
Close-off Ratings at Branch Line Pressure: 70 psid at 20 psi (with 2 to 5 psi spring)

Accessories

14003648-001/U – Vandalism Resistant Assembly, Cover assembly with 1/8 in. NPT air Connection and push-in retainer to replace standard Cover
14004932-001/U – Pneumatic Valve Adapter (M6410/M7410 linkage and a green main spring to allow to retrofit an electric actuator)

Replacement Parts

14002560-010/U – Repair stem assembly, 1.6 Cv VP531C or to Upgrade, 1.6 Cv VP531A
14002560-011/U – Repair stem assembly for 2.6 Cv VP531C or to Upgrade 2.6 Cv VP531A
14002560-012/U – Repair stem assembly for 3.3 Cv VP531C or to Upgrade 3.3 Cv VP531A
14003102-001/U – Replacement Top Assembly
14003297-002/U – Teflon packing kit for VP531C or VP531A upgrade valves
14004898-001/U – Repair Top & Insert for NPT and Solder body, 1.6 Cv VP531C or to upgrade NPT and solder body, 1.6 Cv VP531A
14004898-002/U – Repair Top & Insert for NPT and Solder body, 2.3 and 2.6 Cv VP531C or to upgrade NPT and solder body, 2.3 and 2.6 Cv VP531A
14004898-003/U – Repair Top & Insert for NPT and Solder body, 3.3 Cv VP531C or to upgrade NPT and solder body, 3.3 Cv VP531A
315913/0041/U – Orange Spring, 3 to 10 psi for VP525, VP526, VP527, VP531
316026/U – Yellow Spring, 8-11 psi
316027/0042/U – Green Spring, 2 to 5 psi

Material Number	Connection Type	Connection Size (in.)	Capacity (Cv)	Capacity (Kv)	Dimensions	Comments
VP531C1000/U	NPT	1/2 in.	1.6 Cv	1.38 Kv	Pipe centerline to top of actuator: 3 1/2 in. Face-to-face: 2 9/32 in. (Pipe centerline to top of actuator: 89 mm; Face-to-face: 58 mm)	Replacement for VP531A1004 and VP531A1012
VP531C1018/U	NPT	3/4 in.	2.6 Cv	2.24 Kv	Pipe centerline to top of actuator: 3 1/2 in. Face-to-face: 2 13/32 in. (Pipe centerline to top of actuator: 89 mm; Face-to-face: 61 mm)	Replacement for VP531A1046 and VP531A1053
VP531C1026/U	NPT	3/4 in.	3.3 Cv	2.85 Kv	Pipe centerline to top of actuator: 3 1/2 in. Face-to-face: 2 13/32 in. (Pipe centerline to top of actuator: 89 mm; Face-to-face: 61 mm)	Replacement for VP531A1061 and VP531A1079
VP531C1034/U	Solder	Nominal: 1/2 in.	1.6 Cv	1.38 Kv	Pipe centerline to top of actuator: 3 1/2 in. Face-to-face: 2 21/32 in. (Pipe centerline to top of actuator: 89 mm; Face-to-face: 67 mm)	Replacement for VP531A1087 and VP531A1095
VP531C1042/U	Solder	Nominal: 3/4 in.	2.6 Cv	2.24 Kv	Pipe centerline to top of actuator: 3 1/2 in. Face-to-face: 3 1/32 in. (Pipe centerline to top of actuator: 89 mm; Face-to-face: 77 mm)	Replacement for VP531A1103 and VP531A1111
VP531C1059/U	Solder	Nominal: 3/4 in.	3.3 Cv	2.85 Kv	Pipe centerline to top of actuator: 3 1/2 in. Face-to-face: 3 1/32 in. (Pipe centerline to top of actuator: 89 mm; Face-to-face: 77 mm)	Replacement for VP531A1129 and VP531A1137
VP531C1067/U	NPT	1/2 in.	2.3 Cv	1.99 Kv	Pipe centerline to top of actuator: 3 1/2 in. Face-to-face: 2 9/32 in. (Pipe centerline to top of actuator: 89 mm; Face-to-face: 58 mm)	Replacement for VP531A1020 and VP531A1038

Dimensions Diagram in inches (millimeters)

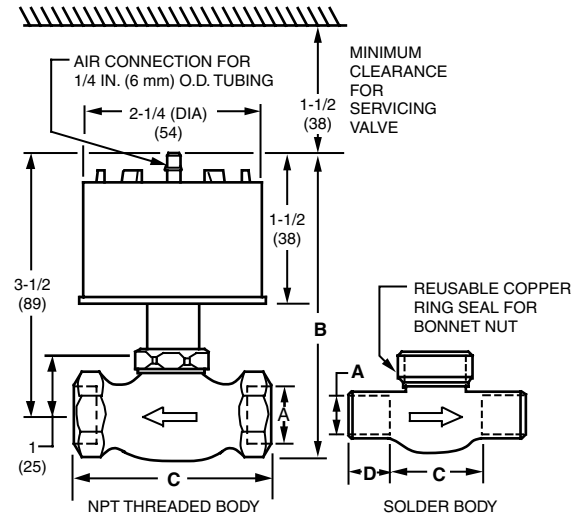

BODY SIZE	A	B	C	D
1/2 IN. NPT (1.6 OR 2.3 CV)	1/2 IN. PIPE	4-1/8 IN. (104 MM)	2-9/32 IN. (58 MM)	–
3/4 IN. NPT (2.6 OR 3.3 CV)	3/4 IN. PIPE	4-3/16 IN. (106 MM)	2-7/16 IN. (61 MM)	–
1/2 IN. SOLDER (1.6 CV)	5/8 IN. (16 MM) O.D. COPPER TUBING	4-1/8 IN. (104 MM)	1-5/8 IN. (41 MM)	1/2 IN. (13 MM)
3/4 IN. SOLDER (2.6 OR 3.3 CV)	7/8 IN. (22 MM) O.D. COPPER TUBING	4-3/16 IN. (106 MM)	1-1/2 IN. (38 MM)	3/4 IN. (19 MM)

C7987B

VP531C Pneumatic Terminal Unit Valve

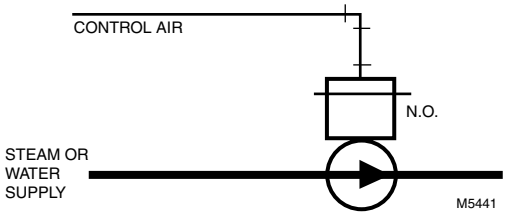

Close-off Ratings for the VP531C

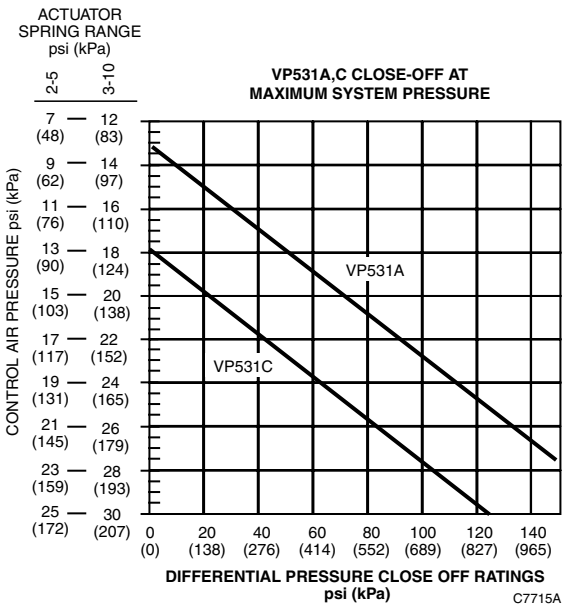

Pneumatic Valve Accessories

Material Number	Description	Used With
14002864-001/U	Valve Rebuild Kit for 1/2 to 3/4 in. valves with CV of 4 or less	VP512
14003102-001/U	Replacement Top Assembly	VP527,VP531,VP526,VP525
14003115-001/U	Valve rebuild kit for 1/2 in. valves with 2 Cv or less. Not for Solder Bodies.	VP525A
14003116-001/U	Valve rebuild kit for 3/4 in. valves with 2 Cv or less valves. Not for Solder Bodies.	VP525A
14003117-001/U	Valve rebuild kit for 3/4 in. valves with 3 Cv. Not for Solder Bodies.	VP525A
14003118-001/U	Valve rebuild kit for 3/4 in. valves with 5 Cv. Not for solder bodies.	VP525A
14003119-001/U	Valve rebuild kit for 1/2 in. valves with 3 Cv. Not for solder bodies.	VP525A
14003313-001/U	Base	VP527A,VP526A,VP531A,C,VP525A,C
14003315-001/U	Gland	VP527A,VP526A,VP531A,C,VP525A,C
14003373-001/U	REP BONNET ASSEMBLY	VP513A
14003381-001/U	Brass Hex Bonnet, 1 3/8 diameter	VP527A,VP526A
14003648-001/U	Vandalism Resistant Assembly, Cover assembly with 1/8 in. NPT air Connection and push-in retainer to replace standard Cover	VP527A,VP526A,VP531A,C,VP525A,C
14003873-001/U	Red Spring, 2 to 5 psi	VP526A
14004932-001/U	Pneumatic Valve Adapter (M6410/M7410 linkage and a green main spring to allow to retrofit an electric actuator)	VP525,VP527,VP531
312817AA/U	Actuator Assembly, 3 to 8 psi, 21 to 55 kPa, and 1/2 in. stroke.	VP517,VP513,VP512
312817AB/U	Actuator Assembly, 6 to 11 psi, 41 to 76 kPa and 1/2 in. stroke.	VP512,VP517,VP513
312817T/U	Actuator assembly, 3 to 10 psi, 21 to 69 kPa, and 1/2 in. stroke.	VP517A,VP513A
312817U/U	Actuator Assembly, 3 to 7 psi, 21 to 48 kPa, and 1/2 in. stroke.	VP517A,VP513A
312817V/U	Actuator Assembly, 8 to 12 psi, 55 to 83 kPa, and 1/2 in. stroke.	VP513
312817W/U	Actuator for VP522B1003	VP522B1003
312817Y/U	Actuator assembly for VP522B1011 and VP522B1029	VP522B1011,VP522B1029
313241A/U	Disc holder for VP513A	VP513A
313824A/U	Rebuild Kit, include Stem and Disc Holder, Button with Screw, Packing and instruction, VP522A1005	VP522A1005
314459A/U	Rebuild Kit, include Stem and Disc Holder, Button with Screw, Packing and instruction, VP522A1039	VP522A1039
314459B/U	Rebuild kit, includes stem and disc holder, Button with screw, packing and instructions, VP522A1047	VP522A1047
315407A/U	Rebuild kit, include Stem and Disc holder, button with screw, packing and instruction, VP522B1003	VP522B1003
316027/0042/U	Green Spring, 2 to 5 psi	VP525|VP527|VP531
316027-00042	Green Spring, 2 to 5 psi	VP525|VP527|VP531
CCT3833/U	Valve Seat Removal Wrench for 5/8 in. OD (1/2 in. nominal) and 7/8 in. OD (3/4 in.nominal) VP513B; VP517A; VP522A, B; VP526 Valves	VP522A, B,VP517A,VP513B,VP526
CCT3843/U	Valve Seat Removal Wrench for 1/2 in. OD (3/8 in. nominal) VP522; VP526 Valves	VP526,VP522

Pneumatic Valve Replacement Parts

Material Number	Description	Used With
14000639-001/U	WASHER	VP526
14001046-004/U	Fastener	VP527A,VP526A,VP531A,C,VP525A,C
14002560-002/U	Stem and Disk Assembly	VP527A1018,VP527A1059
14002560-004/U	Stem and Disk Assembly	VP527A1034,VP527A1075
14002560-006/U	Stem and Disk Holder Assembly. For 0.63 Cv VP525 Valve	VP525
14002560-007/U	Repair stem assembly for 1/2 inch, 2.0 Cv VP525C or to Upgrade, 2.0 Cv VP525A	VP525A,VP525C
14002560-008/U	Repair stem assembly for 1/2 and 3/4 inch, 3.0 Cv VP525C or to Upgrade 1/2 and 3/4 inch, 3.0 Cv VP525A	VP525C,VP525A
14002560-009/U	Repair stem assembly for 3/4 inch, 5.0 Cv VP525C or to Upgrade, 5.0 Cv VP525A	VP525C,VP525A
14002560-010/U	Repair stem assembly, 1.6 Cv VP531C or to Upgrade, 1.6 Cv VP531A	VP531A,VP531C
14002560-011/U	Repair stem assembly for 2.6 Cv VP531C or to Upgrade 2.6 Cv VP531A	VP531C,VP531A
14002560-012/U	Repair stem assembly for 3.3 Cv VP531C or to Upgrade 3.3 Cv VP531A	VP531C,VP531A
14002560-013/U	Repair stem assembly for 1/2 inch, 0.63 Cv VP52<deg>C or to Upgrade, 0.63 Cv VP525A	VP525C,VP525A
14002863-001/U	Valve Rebuild Kit for 3/4 to 1 1/4 in valves with CV of 6.3 or 10	VP512
14003297-001/U	Valve repack kit for VP526A, VP527A, or VP531A valves with 3/16 inch stem	VP527A,VP526A,VP531A
14003297-002/U	Teflon packing kit for VP531C or VP531A upgrade valves	VP531C,VP531A
14003299-001/U	Repair Top & Insert for 5/8 in. OD, 1.6 Cv VP525A solder body	VP525A
14003300-001/U	Repair Top & Insert for 7/8 in. OD, 2.5 Cv VP525A solder body	VP525A
14003308-001/U	Valve Bonnet	VP531C,VP531A
14003314-001/U	1 1/4 inch hex stainless steel Bonnet nut, Finish zinc plate with Dichromate treatment.	VP531C,VP531A
14003352-001/U	Seal washer, 1 1/64 outside diameter X 7/8 inside diameter	VP531C,VP531A
14003382-001/U	Brass Hex Bonnet 1-1/2 in. diameter	VP525C,VP526A
14003475-001/U	Valve rebuild kit for 1/2 in. valve with 0.4 or 0.63 Cv	VP527A
14003476-001/U	Valve rebuild kit for 1/2 in. valve with 1 or 1.6 Cv	VP527A
14004897-001/U	Repair Top & Insert for 1/2 inch NPT, 0.63 Cv VP525C or to upgrade 1/2 NPT, 0.63 Cv VP525A	VP525C,VP525A
14004897-002/U	Repair Top & Insert for 1/2 inch NPT, 2.0 Cv VP525C or to upgrade 1/2 NPT, 2.0 Cv VP525A	VP525C,VP525A
14004897-003/U	Repair Top & Insert for 3/4 inch NPT, 3.0 Cv VP525C or to upgrade 3/4 NPT, 3.0 Cv VP525A	VP525C,VP525A
14004897-004/U	Repair Top & Insert for 3/4 inch NPT, 5.0 Cv VP525C or to upgrade 3/4 NPT, 5.0 Cv VP525A	VP525C,VP525A
14004898-001/U	Repair Top & Insert for NPT and Solder body, 1.6 Cv VP531C or to upgrade NPT and solder body, 1.6 Cv VP531A	VP531C,VP531A
14004898-002/U	Repair Top & Insert for NPT and Solder body, 2.3 and 2.6 Cv VP531C or to upgrade NPT and solder body, 2.3 and 2.6 Cv VP531A	VP531C,VP531A
14004898-003/U	Repair Top & Insert for NPT and Solder body, 3.3 Cv VP531C or to upgrade NPT and solder body, 3.3 Cv VP531A	VP531C,VP531A
310135/U	Packing Spring, 1 Required	VP513A,B,VP522A,B
310137/U	Spacer for VP513 or VP517 Valves	VP513A,B,VP522A,B
310143/U	Black Packing, 3 required	VP513A,B,VP522A,B
310208/U	White Packing (3 required per valve)	VP531C, VP525C
312826/U	O-RING	
313102/U	Disc for VP513A Valves	VP513A
313744A/U	Actuator Replacement Assembly for the VP519 Valve	VP519C
314526/U	Orange Spring with Blue stripe, 3 to 10 psi, 1/2 in. stroke	312817T,VP513A,VP517A
315911/0021/U	Cup with keyhole for VP525, VP526, VP527, VP531	VP527A|VP526A|VP531A,C|VP525A,C
315911-00021	Cup for VP525	VP525
315913/0041/U	Orange Spring, 3 to 10 psi for VP525, VP526, VP527, VP531	VP527A|VP526A|VP531A,C|VP525A,C
315917/U	Diaphragm	VP527A,VP526A,VP531A,C,VP525A,C
315939/U	Spring	VP513B
316026/U	Yellow Spring, 8-11 psi	VP526A
316207/U	Stem for VP526A	VP526A
316208/U	VALVE SEAT	VP526A
316209/U	Plug 1.0 Cv	VP526A
316210/U	Plug for VP526	VP526A1118, VP526A1076, VP526A1092
316336/U	DISC	VP527A1026,VP527A1067
320047/U	RETAINING RING	VP526A

Gauges for Pneumatics

Material Number	Description
14004904-001/U	2-1/2 in. diameter, typical panel mount Pneumatic Receiver gauge (-40 to 160°F), +/- 2% accuracy. Replaces 14506495-001 (gauge) + 14505846-001
14004904-002/U	2-1/2 in. diameter, typical panel mount Pneumatic Receiver gauge (0 to 200°F), +/- 2% accuracy. Replaces 4506495-001 (gauge) + 14505846-002
14004904-003/U	2-1/2 in. diameter, typical panel mount Pneumatic Receiver gauge (40 to 240°F), +/- 2% accuracy. Replaces 14506495-001 (gauge) + 14505846-003
14004904-004/U	2-1/2 in. diameter, typical panel mount Pneumatic Receiver gauge (3 to 15 psi), +/- 2% accuracy. Replaces 14506495-001 (gauge) + 14505846-022
14004904-005/U	2-1/2 in. diameter, typical panel mount Pneumatic Receiver gauge (0 to 20 psi), +/- 2% accuracy. Replaces 14506495-001 (gauge) + 14505846-023
14004904-006/U	2-1/2 in. diameter, typical panel mount Pneumatic Receiver gauge (25 to 125°F), +/- 2% accuracy. Replaces 14506495-001 (gauge) + 14505846-004
14004904-007/U	2-1/2 in. diameter, typical panel mount Pneumatic Receiver gauge (50 to 100°F), +/- 2% accuracy. Replaces 14506495-001 (gauge) + 14505846-005
14004904-008/U	2-1/2 in. diameter, Pneumatic Receiver gauge (-20 to 80°F), +/- 2% accuracy
14004904-011/U	2-1/2 in. diameter, Pneumatic Receiver gauge (15 to 75% RH), +/- 2% accuracy
14004904-101/U	2-1/2 in. diameter, Pneumatic Receiver gauge (-40 to 160°F), +/- 1% accuracy. Replaces 14506495-101 (gauge) + 14505846-001
14004904-102/U	2-1/2 in. diameter, Pneumatic Receiver gauge (0 to 200°F), +/- 1% accuracy. Replaces 14506495-101 (gauge) + 14505846-002
14004904-103/U	2-1/2 in. diameter, Pneumatic Receiver gauge (40 to 240°F), +/- 1% accuracy. Replaces 14506495-101 (gauge) + 14505846-003
14004904-104/U	2-1/2 in. diameter, Pneumatic Receiver gauge (3 to 15 psi), +/- 1% accuracy. Replaces 14506495-101 (gauge) + 14505846-022
14004904-105/U	2-1/2 in. diameter, Pneumatic Receiver gauge (0 to 20 psi), +/- 1% accuracy. Replaces 14506495-101 (gauge) + 14505846-023
14004905-001/U	3-1/2 in. diameter, Pneumatic Receiver gauge (-40 to 160°F), +/- 2% accuracy
14004905-002/U	3-1/2 in. diameter, Pneumatic Receiver gauge (0 to 200°F), +/- 2% accuracy. Replaces 14506496-001 (gauge) + 14505846-102
14004905-003/U	3-1/2 in. diameter, Pneumatic Receiver gauge (40 to 240°F), +/- 2% accuracy. Replaces 14506496-001 (gauge) + 14505846-103
14004905-006/U	3-1/2 in. diameter, Pneumatic Receiver gauge (25 to 125°F), +/- 2% accuracy. Replaces 14506496-001 (gauge) + 14505846-104
14004905-007/U	3-1/2 in. diameter, Pneumatic Receiver gauge (50 to 100°F), +/- 2% accuracy. Replaces 14506496-001 (gauge) + 14505846-105
14004905-009/U	3-1/2 in. diameter, Pneumatic Receiver gauge (0 to 2 in. wc), +/- 2% accuracy
14004905-010/U	3-1/2 in. diameter, Pneumatic Receiver gauge (15 to 85% RH), +/- 2% accuracy
14004905-011/U	3-1/2 in. diameter, Pneumatic Receiver gauge (15 to 75% RH), +/- 2% accuracy
14004905-101/U	3-1/2 in. diameter, Pneumatic Receiver gauge (-40 to 160°F), +/- 1% accuracy. Replaces 14506496-101 (gauge) + 14505846-101
14004905-102/U	3-1/2 in. diameter, Pneumatic Receiver gauge (0 to 200°F), +/- 1% accuracy. Replaces 14506496-101 (gauge) + 14505846-102
14004905-103/U	3-1/2 in. diameter, Pneumatic Receiver gauge (40 to 240°F), +/- 1% accuracy. Replaces 14506496-101 (gauge) + 14505846-103
14004905-104/U	3-1/2 in. diameter, Pneumatic Receiver gauge (3 to 15 psi), +/- 1% accuracy. Replaces 14506496-101 (gauge) + 14505846-122
14004905-105/U	3-1/2 in. diameter, Pneumatic Receiver gauge (0 to 20 psi), +/- 1% accuracy. Replaces 14506496-101 (gauge) + 14505846-123
14004905-106/U	3-1/2 in. diameter, Pneumatic Receiver gauge (25 to 125°F), +/- 1% accuracy. Replaces 14506496-101 (gauge) + 14505846-104
14004905-107/U	3-1/2 in. diameter, Pneumatic Receiver gauge (50 to 100°F), +/- 1% accuracy. Replaces 14506496-101 (gauge) + 14505846-105
305914/U	2 in. diameter, 1/8 NPT center stem back mount Pressure Indicating gauge (0 to 30 psi scale) with +/- 3% accuracy
305917/U	2 in. diameter, 1/4 NPT center stem back mount Pressure Indicating gauge (0 to 160 psi scale) with +/- 3% accuracy
305923/U	1-1/2 in. diameter, 1/8 NPT stem on bottom mount Pressure Indicating gauge (0 to 30 psi scale) with +/- 4% accuracy
305925/U	Gauge, 0-30 PSI, 2 in., 1/8 in. NPT
305935/U	3-1/2 in. diameter, surface mounted 1/8 NPT stem on bottom Receiver gauge (-40 to +160°F scale) with +/- 2% accuracy
804191B/U	2-1/2 in. diameter, panel-mounted Pneumatic Pressure Indicating Gauge (0 to 30 psi), 1/4 in. barbed connection, +/-3% accuracy
804191C/U	2-1/2 in. diameter, panel-mounted Pneumatic Pressure Indicating Gauge (0 to 60 psi), 1/8 in. NPT connection, +/-3% accuracy
804191E/U	2-1/2 in. diameter, panel-mounted Pneumatic Pressure Indicating Gauge (0 to 160 psi), 1/8 in. NPT connection, +/-3% accuracy

Pneumatic Accessories

Material Number	Description	Used With	
104998064	Internal Restriction Assembly, 0.008 in. Restriction, Red		
14002913-003/U	External Restriction Assembly. 0.007 in. Restriction, Red, Inlet 1/4 in; Outlet 1/4 in. and 5/32 in.	LP907	
14002913-004/U	External Restriction Assembly. 0.005 in. Restriction, Blue Inlet 1/4 in; Outlet 5/32 in. and 5/32 in.		
14002913-005/U	External Restriction Assembly. 0.007 in. Restriction, Red Inlet 1/4 in; Outlet 5/32 in. and 5/32 in.		
14002913-007/B	External Restriction Assembly. 0.013 in. Restriction, Gray and Red, Inlet 1/4 in; Outlet 1/4 in. and 1/4 in.		
14002914-001/B	Internal Restriction Assembly, 0.005 in. Restriction, Blue	RP975; SP970	
14003349-001/U	Body assembly., Includes: plate - 14003346-001, gasket - 314862, body assembly - 14003342-001, bellows assembly - 314446A, gasket - 314921, gasket - 14003343-001, plate - 14003344-001, 2 washers - 304570, plate (nozzle) - 314501, 2 screws - 304897, cover	PP905	
14003428-001/U	Amber tint filter bowl 4 1/64 inch long x 2 59/64 inch diameter including Bushing (313003)	WP251A	
14003519-001/U	0-30 psi Gauge Kit with Fittings for Copper or Poly Tubing		
14003567-001/U	Barbed cap with liner of low density polyethylene	14002913	
14004239-001/U	Total air flow pick-up Tube assembly	PP904A	
14004536-001/U	Music wire Spring with inside diameter .385 inch and initial load at length - 2.9 +/- 0.3 lbs. Maximum operating temperature 150°F.	PP901	
14004559-001/B	Adaptor assemblies consisting of 5/32 in. tube and 5/32 to 1/4 barb fitting for TP970 connections	Pneumatic Fittings	
14004596-004/U	1 1/4 in. Bonnet for V5011/V5013	V5011; V5013	
14501547-001/U	ISD Central relay panel		
14501600-001/U	Resistor Assembly PPK, End of Line Resistor, 1.91K Ohms Single Zone Fire Alarm Panels		
14501600-003/U			
14502412-005/U	Lightning Suppressor for Lighting Products		
14502412-006/U			
14502412-009/U			
14502412-010/U			
14502412-011/U			
14502412-012/U			
14502412-014/U			
14505159-001/U	Tamper Switch for Cabinet		
14505393-001/U	Isolation Transformer, 24V / 50-60 Hz		
14505928-001/U	Lock & Key for Cabinet		
14506587-004/U	Base for TC804, TC805 Smoke Detector		
14506635-001/U	Rough-in Ring, for Half-sized (18 in. x 18 in.) Standard Cabinet (19 in. X 24 in. X 9 in.).		
14506635-002/U	Rough-in Ring for Full-sized (36 in. x 36 in.) Standard Cabinet (38 in. x 24 in. x 9 in.).		
14506636-001/U	Door with Lock for Half-sized (18 in. x 18 in.) Standard Cabinet.		
14506636-002/U	Door with Lock for Full-sized (36 in. x 36 in.) Standard Cabinet.		
15753207-004/U	Back Coverplate for Half-sized (18 in. x 18 in.) Standard Cabinet.		
176112024	Three position switch, same as SP470A1018 without the scaleplate	SP470A1018	
186115138	Internal Restriction Assembly, 0.013 in. Restriction, Gray		
200813A/U	Motor Plate assembly for F57	F57	
301572A/0767/U	Thermostat Key		
301572A-0767			
310418A/U	Pneumatic External Adjustable Restrictor		
310543/U	Seat, Valve, Removable, V5005		
311680/U	Plug, Orifice, Rubber, TP, LP thermostats		
314963/U	Spring		
315559E/U	Pneumatic “Tee” Restrictor		
316134B/U	PP901A & B Diaphragm Repair Kit	PP901A,B	
40889086-003/U	Half Size Door Assembly		
40889096-002/U	Universal Cabinet with Locking Device		
802550/U	Toggle Switch		

Material Number	Description	Used With	
AK3052W1C/U	Pneumatic Tubing, Polyethylene Flame Retardant Plastic (5/32 in. O.D. x 0.030 in. wall thickness), Minimum order quantity is 1000 ft.; ships in 4 rolls of 250 ft. per roll.		
AK3053W1C/U	Pneumatic Tubing, Polyethylene Flame Retardant Plastic (1/4 in. O.D. x 0.040 in. wall thickness), Black with Colored Markings, without Fittings, Minimum order quantity is 1000 ft.; ships in 4 rolls of 250 ft. per roll		
AK3056C/U	Pneumatic Tubing, Polyethylene Flame Retardant Plastic (3/8 in. O.D. x 0.062 in. wall thickness), Black with 1 through 2 White Markings, without Fittings, Carton qty = 1000 ft		
AK3061C/U	Pneumatic Tubing, Polyethylene Flame Retardant Plastic (1/2 in. O.D. x 0.062 in. wall thickness), Black with 1 through 2 White Markings, without Fittings, Carton qty = 500 ft		
AK3325A/U	Repair Kit Miscellaneous Cable		
AK3470B/U	Condensate Trap, 1/2 in., for 1 h.p. or larger compressors		
AK3470C/U	Condensate Trap, 3/8 in., for 3/4 h.p. or smaller compressors		
AK3486/U	Coalescing In-line Pneumatic Filter Kit includes Two Filters with integral barbed fitting for individual devices		
ARR262/U	Miniature Pressure Regulator (0-125 psi Range), no gauge		
ARR262I/U	Miniature Pressure Regulator (0-20 psi Range), no gauge		
ARR262-S31/U	Miniature Pressure Regulator (0-125 psi Range), includes 0-160 psi gauge		
ARR262-S32/U	Miniature Pressure Regulator (0-60 psi Range), includes 0-60 psi gauge		
ARR262-S34/U	Arrow PRV 0-60		
ARRBK1611/U	Arrow PRV		
CCT1421/U	1/4 in. Brass Compression Union		
CCT1435T/U	Pneumatic Fitting - 1/4 in. x 1/8 in. NPT Brass Compression Adapter to NPT		
CCT1529/U	Pneumatic Fitting - 1/4 in. Brass Compression Tee		
CCT1531/U	Pneumatic Fitting - 3/8 in. Brass Compression Tee		
CCT1532/U	Pneumatic Fitting - 1/2 in. Brass Compression Tee		
CCT1571/U	Pneumatic Fitting - 1/4 in. Plastic Ferrule (white) for use with plastic tubing and standard compression fittings		
CCT1572/U	Pneumatic Fitting - 3/8 in. Plastic Ferrule (white) for use with plastic tubing and standard compression fittings		
CCT1573/U	Pneumatic Fitting - 1/2 in. Plastic Ferrule (white) for use with plastic tubing and standard compression fittings		
CCT1575/U	Pneumatic Fitting - 1/4 in. Brass Insert for Plastic Tubing		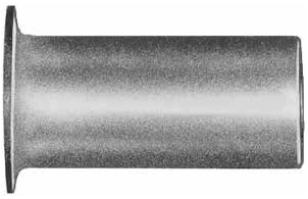
CCT1576/U	Pneumatic Fitting - 3/8 in. Brass Insert for Plastic Tubing		
CCT1577/U	Pneumatic Fitting - 1/2 in. Brass Insert for Plastic Tubing		
CCT1589B/U	Pneumatic Fitting - 1/4 in. x 1/8 in. FPT 90 Barbed Female Street Ells		

Pneumatic Accessories

Material Number	Description	Used With	
CCT1590BT/U	Pneumatic Fitting - 1/4 in. Barbed x 1/8 in. NPT Male Adapter, Taped		
CCT1594B/U	Pneumatic Fitting - 1/4 in. Barbed x 1/8 in. FPT Female Adapter		
CCT1595BT/U	Pneumatic Fitting - 1/4 in. barbed x 1/8 in. NPT 90 Barbed Male Street Ells		
CCT1598B/U	Pneumatic Fitting - 3/8 in. barbed x 3/8 in. barbed 90 Elbow		
CCT1599BT/U	Pneumatic Fitting - combination 5/32 in. and 1/4 in. Barbed x 1/8 in. NPT Male Adapter		
CCT1602/U	Pneumatic Fitting - In-line gauge Tee (5/32 in. barbed x 5/32 in. barbed x 1/8 in. FPT)		
CCT1606B/U	Pneumatic Fitting - 5/32 in. barbed x 1/4 in. barbed (brass) plastic tubing coupling, reducing		
CCT1607B/U	Pneumatic Fitting - 1/4 in. barbed x 1/4 in. barbed (brass) plastic tubing coupling		
CCT1608B/U	Pneumatic Fitting - 3/8 in. barbed x 3/8 in. barbed (brass) plastic tubing coupling		
CCT1610B/U	Pneumatic Fitting - 3/8 in. barbed x 1/4 in. barbed (brass) plastic tubing coupling		
CCT1611B/U	Pneumatic Fitting - 1/2 in. barbed x 3/8 in. barbed (brass) plastic tubing coupling		
CCT1612B/U	Pneumatic Fitting - 1/4 in. barbed x 1/4 in. barbed x 1/4 in. barbed (brass) Straight Tee		
CCT1613B/U	Pneumatic Fitting - 3/8 in. barbed x 3/8 in. barbed x 3/8 in. barbed (brass) Straight Tee		
CCT1614B/U	Pneumatic Fitting - 1/4 in. barbed x 1/4 in. barbed x 1/8 in. FPT In-line gauge Tee		

Material Number	Description	Used With	
CCT1615B/U	Pneumatic Fitting - 3/8 in. barbed x 3/8 in. barbed x 1/4 in. barbed Reducing Tee		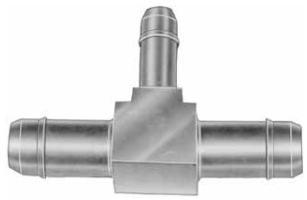
CCT1616B/U	Pneumatic Fitting - 1/2 in. barbed x 1/2 in. barbed x 1/4 in. barbed Reducing Tee		
CCT1617B/U	Pneumatic Fitting - 1/2 in. barbed x 1/2 in. barbed (brass) plastic tubing coupling		
CCT1618B/U	Pneumatic Fitting - 1/2 in. barbed x 1/2 in. barbed x 3/8 in. barbed Reducing Tee		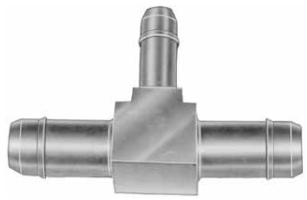
CCT1619B/U	Pneumatic Fitting - Bulkhead Barb, 1/4 in. barbed x 1/4 in. Compression Nuts (for panels 5/16 in. thick)		
CCT1620B/U	Pneumatic Fitting - 1/2 in. barbed x 1/2 in. barbed x 1/2 in. barbed (brass) Straight Tee		
CCT1622/U	Pneumatic Fitting - 1/4 in. barbed x 1/4 in. barbed x 1/8 in. FPT In-line gauge Tee with mounting tabs		
CCT1623/U	Pneumatic Fitting - 1/4 in. Spring Clamp for Pneumatic Tubing		
CCT1628B/U	Pneumatic Fitting - 5/32 in. barbed x 5/32 in. barbed (brass) plastic tubing coupling		
CCT1629B/U	Pneumatic Fitting - 1/2 in. barbed x 1/4 in. barbed (brass) plastic tubing coupling		
CCT1630B/U	Pneumatic Fitting - 1/4 in. barbed x 1/4 in. barbed x 5/32 in. barbed Reducing Tee		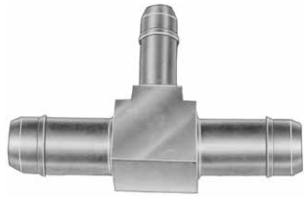
CCT1631B/U	Pneumatic Fitting - 3/8 in. barbed x 3/8 in. barbed x 5/32 in. barbed Reducing Tee		
CCT1633BT/U	Pneumatic Fitting - 1/4 in. Barbed x 1/4 in. NPT Male Adapter		

Pneumatic Accessories

Material Number	Description	Used With	
CCT1635B/U	Pneumatic Fitting - 1/4 in. barbed x 1/4 in. Compression Adapter		
CCT1637B/U	Pneumatic Fitting - 5/32 in. barbed x 5/32 in. barbed x 5/32 in. barbed (brass) Straight Tee		
CCT1640/U	Pneumatic Fitting - 1/4 in. Tubing Plug		
CCT1641/U	Pneumatic Fitting - 5/32 in. barbed x 5/32 in. Brass barbed 90 Elbow		
CCT1642/U	Pneumatic Fitting - 1/4 in. barbed x 1/4 in. barbed 90 Elbow		
CCT1643/U	Pneumatic Fitting - 1/4 in. barbed x 5/32 in. barbed 90 Elbow		
CCT1692T/U	Pneumatic Fitting - 1/4 in. NPT x 1/8 in. FPT (brass) Pipe Bushing, Taped		
CCT1694T/U	Pneumatic Fitting - 3/8 in. NPT x 1/4 in. FPT Brass Reducing Pipe Bushing, Taped		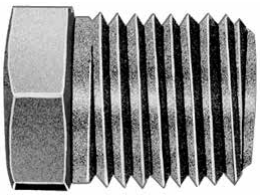
CCT1696T/U	Pneumatic Fitting - 1/2 in. NPT x 1/4 in. FPT Brass Reducing Pipe Bushing, Taped		
CCT1801/U	Pneumatic Fitting - Rubber Cap for 1/4 in. O.D. Pneumatic Tubing		
CCT1802/U	Pneumatic Fitting - Rubber Grommet for 1/4 in. hole used to install capillary in duct		
CCT1807A/U	Plastic Cap for 3/8 in. Tubing		
CCT1815/U	Pneumatic Fitting - Aluminum Barb Plug for 5/32 in. x 5/32 in. O.D. Pneumatic Tubing (no air passage)		
CCT1820/U	Plastic Bushing for 1/2 in. EMP or K.O.		

Material Number	Description	Used With	
CCT2083T/U	Pneumatic Fitting - Tank Valve with CCT2084 Cap, 1/8 in. NPT		
CCT2085/U	Pneumatic Fitting - Gauge Adapter fits any standard 1/8 in. NPT gauge	LP907	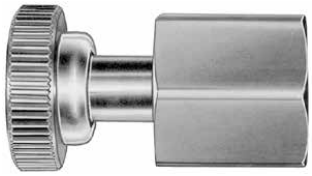
CCT2090A/U	Air Check Diode Valve 1/4 in. O.D. Brass, 1.2 SCFM.		
CCT2091/U	Pneumatic Fitting - Air Check Diode Valve FPT for 1/4 in. O.D. Pneumatic Tubing (4.4 scfm)		
CCT2092/U	Pneumatic Fitting - Air Check Diode Valve FPT for 3/8 in. O.D. Pneumatic Tubing (7.5 scfm)		
CCT2127B/U	Pneumatic Fittings - 1/4 in. barbed x 1/4 in. barbed Pneumatic Needle Valve		
CCT2564/U	Pneumatic Fittings - Plated Single Straps for 1/4 in. O.D. Copper Tubing		
CCT2565/U	Pneumatic Fittings - Plated Single Straps for 3/8 in. O.D. Copper Tubing		
CCT2566/U	Pneumatic Fittings - Plated Single Straps for 1/2 in. O.D. Copper Tubing		
CCT2626/U	Pneumatic Fittings - Copper Gang Straps (6 in. wide) for 1/4 in. or 3/8 in. O.D. Copper Tubing		
CCT2627/U	Pneumatic Fittings - Copper Gang Straps (36 in. wide) for 1/4 in. or 3/8 in. O.D. Copper Tubing		
CCT2628/U	Pneumatic Fittings - Zinc-plated Steel Universal Gang Straps (24 in. wide) for 1/8 in. through 3/4 in. O.D. Copper Tubing		
CCT2630/U	Pneumatic Fittings - Aluminum Universal Gang Straps (24 in. wide) for 1/8 in. through 3/4 in. O.D. Copper Tubing		
CCT2762/U	Pneumatic Fittings - Adhesive Straps (1 in. wide) for 3/8 in. O.D. Tubing		
CCT720B/U	Tubing Bender for 1/4 in. O.D. Pneumatic Tubing		
CCT722B/U	Tubing Bender for 3/8 in. O.D. Pneumatic Tubing		
CCT814/U	Slide Rule for Calculating Pneumatic Valve and Main Air Sizing		
CCT817C/U	Replacement gauge for the DSP3356 Pneumatic Control Calibration Kit		
CCT819/U	Proportional Band and Authority Setting Adjustment Tool for all RP920's		

Pneumatic Accessories

Material Number	Description	Used With	
CCT852/U	Pressure Bulb Assembly		
CCT853/U	Pneumatic Tubing for Test Equipment, 11/32 in. O.D. x 5/32 in. Latex Tubing (10 ft lengths)		
CCT948/U	Valve Seat Removal Wrench, 2 5/8 in. for V5011 and V5013 (2-1/2 in. Valves)		
CCT950/U	Tubing holder. This tubing holder is used in combination with CCT951 to insert 5/32 in. and 1/4 in. fittings in plastic tubing		
CCT951/U	Fitting holder: This fitting holder is used in combination with CCT950 to insert 5/32 in. and 1/4 in. fittings in plastic tubing		
CCT970/U	Thermometer Calibration Tool for Pneumatic Thermostats (TP970-family)		
DSP3356/U	Calibration Training Kit		
HKN05417007/U	Drain Snap-Trap #05.4170-07		
HKN07132/U	Filter Cartridge for HKN13023 Oil Removal Filter		
HKN07444101/U	Separator/Drain. Cartridge (for HKN8005, HKN8010 & HKN8210)	HKN8210; HKN8010; HKN8005	
HKN44604363/U	Filter Element, 40 microns with gaskets (for HKN8010, HKN8210, HKN8015, HKN8025 & HKN8210)	HKN8025; HKN8015; HKN8010; HKN8210	
MJK100/U	Pneumatic Fittings Kit - Includes an assortment of fittings most often required for replacement or repair of pneumatic devices.		
MQP800/U	Pneumatic Calibration Kit with two 0-30 psi gauges		
P246A1009/U	Static Pressure Regulator		

Definitions and Abbreviations

Actuator (Damper) — A mechanical device that operates a final control element (e.g., valve, damper). Actuator (Valve) — The part of an automatic control valve that moves the stem up and down based on an electric, electronic, or pneumatic signal from a controller. For butterfly or other rotary valves, the actuator rotates the stem. The actuator and valve can be two separate devices or together they can be one device.

BLP — See Branchline pressure.

Body rating (actual) — The correlation between safe, permissible flowing fluid pressure and flowing fluid temperature of the valve body (exclusive of the packing, disc, etc.). The nominal valve body rating is the permissible pressure at a specific temperature.

EXAMPLE:

A cast iron, screwed-end valve has a 125 psi nominal body rating. The actual valve body ratings may be 125 psi at 380°F and 175 psi at 175°F.

Body rating (nominal) — The theoretical pressure rating, expressed in psi, of the valve body exclusive of packing, disc, etc. The nominal rating is often cast on the valve body and provides a way to classify the valve by pressure. A valve of specified body material and nominal body rating often has characteristics such as pressure-temperature ratings, wall thickness, and end connections which are determined by a society such as ANSI (American National Standards Institute). Note that the nominal body rating is not the same as the actual body rating.

Body — The valve casting through which the controlled fluid flows.

Bonnet — The part that screws to the top of the valve body and contains the packing that seals and guides the valve stem.

Branch line — The air line from a controller to the controlled device.

Branchline pressure (BLP) — A varying air pressure signal from a controller to an actuator, carried by the branch line. Can go from zero to full main line pressure.

British thermal unit (Btu) — The amount of heat required to raise one pound of water one degree Fahrenheit.

Btu — See British thermal unit.

Close-off rating of three-way valves — The maximum pressure difference between either of the two inlet ports and the outlet port for mixing valves, or the pressure difference between the inlet port and either of the two outlet ports for diverting valves.

Close-off rating — The maximum pressure drop that a valve can withstand without leakage while in the full closed position. The close-off rating is a function of actuator power to hold the valve closed against pressure drop, but structural parts such as the stem can be the limiting factor.

EXAMPLE:

A valve with a close-off rating of 10 psi could have 40 psi upstream pressure and 30 psi downstream pressure. Note that in applications where failure of the valve to close is hazardous, the maximum upstream pressure must not exceed the valve close-off rating, regardless of the downstream pressure.

The valve close-off rating is independent of the actual valve body rating. See definition of BODY RATING (ACTUAL) in this section.

Control point — The actual value of the controlled variable (setpoint plus or minus offset).

Control valve — A device used to control the flow of fluids such as steam, water, or air.

Controlled variable — The quantity or condition that is measured and controlled (e.g., temperature, relative humidity, pressure).

Controller — A device that senses the controlled variable (or receives an input signal from a remote sensing element), compares the signal with the setpoint, and outputs a control signal (branchline pressure) to an actuator.

Cv — See Flow coefficient.

DA — See Direct acting or Discharge air.

Damper — A device used to control the flow of air in a duct or through a wall louver.

Dew-point temperature — The temperature at which water vapor from the air begins to form droplets and settles or condenses on surfaces that are colder than the air. The more moisture the air contains, the higher its dew-point temperature. When dry-bulb and wet-bulb temperatures of the air are known, the dew-point temperature can be plotted on the psychrometric chart.

Differential — A term that applies to two-position devices. The range through which the controlled variable must pass in order to move the final control element from one to the other of its two possible positions. The difference between cut-in and cut-out temperatures, pressures, etc.

Direct acting (DA) — A direct-acting thermostat or controller increases the branchline pressure on an increase in the measured variable and decreases the branchline pressure on a decrease in the variable. A direct-acting actuator extends on an increase in branchline pressure and retracts on a decrease in pressure.

Direction of flow — The correct flow of the controlled fluid through the valve is usually indicated on the valve body. If the flow of the fluid goes against the indicated direction, the disc can slam into the seat as it approaches the closed position. The result is excessive valve wear, hammering, and oscillations. In addition, the actuator must work harder to reopen the closed valve since it must overcome the pressure exerted by the fluid on top of the disc rather than have the fluid assist in opening the valve by exerting pressure under the disc.

Discharge air (DA) — Conditioned air that has passed through a coil. Also, air discharged from a supply duct outlet into a space.

Disc — The part of the plug assembly that contacts the valve seat to close off flow of the controlled fluid. Certain valve plug assemblies are built so the part of the assembly contacting the seat is replaceable. This type of plug is called a renewable disc plug assembly. Renewable discs are usually made of a composition material softer than metal. Valves with all metal or nonrenewable discs may have to be “ground in” to restore a damaged seating surface. Note that the term disc can mean both the plug and disc together.

Dry-bulb temperature — The temperature read directly on an ordinary thermometer as degrees Fahrenheit (F) or degrees Celsius (C).

Equal percentage — A valve which changes the existing flow an equal percentage (regardless of flow rate) for similar movements in stem travel (at any point in the flow range).

Final control element — A device such as a valve or damper that acts to change the value of the manipulated variable. Positioned by an actuator.

Pneumatic Definitions and Abbreviations

Flow coefficient (capacity index) — Used to state the flow capacity of a control valve for specified conditions. Currently, in this catalog, two flow coefficients Kv, or Cv are used. The flow coefficients have the following relationships:

Av = 0.0000240 Cv

Kv = 0.865 Cv

The flow coefficient Kv is water flow in cubic meters per hour with a static pressure loss across the valve of 10^5 pascals (1 bar) within the temperature range of 5 to 40°C and can be determined from the formula:

$$Kv = Q\sqrt{\frac{\Delta p_{Kv}}{\Delta p} \bullet \frac{\rho}{\rho_W}}$$ M2807

Where:

Q = volumetric flow in cubic meters per hour.

ρ = fluid density in kilograms per cubic meter.

ρ_W = density of water in kilograms per cubic meter.

Δp_{Kv} = static pressure loss of 10^5 pascals.

Δp = static pressure loss across the valve in pascals.

The flow coefficient Cv is water flow in gallons per minute with a pressure loss across the valve of one pound per square inch within the temperature range of 40 to 100°F and can be determined for other conditions from the formula:

$$Cv = Q\sqrt{\frac{1}{\Delta P} \bullet \frac{\rho}{\rho_W}}$$ M2810

Where:

Q = volumetric flow in US gallons per minute.

ρ = fluid density in pounds per cubic foot.

ρ_W = density of water in pounds per cubic foot within the temperature range of 40 to 100°F.

Δp = static pressure loss across the valve in pounds per square inch.

K — Kelvin used in Standard International Units (SI) to express a temperature range.

Kv — See Flow coefficient.

Linear — A valve which provides a flow-to-lift relationship that is directly proportional. It provides equal flow changes for equal lift changes, regardless of percentage of valve opening. When plotted on rectilinear coordinates, the relationship approximates a straight diagonal line.

Linkage — A device which connects an actuator to a damper or control valve. To open and close a damper, the typical linkage consists of an actuator crankarm, balljoints, pushrod, and damper crank arm. In a valve application, the linkage connects the actuator to the valve and translates the rotary output of the actuator to the linear action of the valve stem.

M — See Main line.

MA — See Mixed air.

Main line (M) — The air line from the air supply system to controllers and other devices. Usually plastic or copper tubing.

Maximum pressure and temperature — The maximum pressure and temperature limitations of fluid flow that a valve can withstand. These ratings may be due to valve packing, body, or disc material or actuator limitations. The actual valve body ratings are exclusively for the valve body and the maximum pressure and temperature ratings are for the complete valve (body and trim). Note that the maximum pressure and temperature ratings may be less than the actual valve body ratings.

EXAMPLE:

The body of a valve, exclusive of packing, disc, etc., has a pressure and temperature rating of 125 psi at 380°F. If the valve contains a composition disc that can withstand a temperature of only 115°C, then the temperature limit of the disc becomes the maximum temperature rating for the valve.

Measuring element — Same as sensing element.

Mixed air (MA) — Typically a mixture of outdoor air and return air from the space.

mL/s — milliliters per second.

Modulating — Varying or adjusting by small increments. Also called "proportioning."

Offset — A sustained deviation between the actual system control point and its controller setpoint under stable operating conditions. Usually applies to proportional (modulating) control.

Plug — The part that varies the opening for the fluid to flow through the valve body. The following describes the three most common types of plugs:

— A contoured plug has a shaped end that is usually end-guided at the top or bottom (or both) of the valve body. The shaped end controls fluid flow through the valve.

— A quick-opening plug is flat and is either end-guided or guided by wings riding in the valve seat ring. The flat plug provides maximum flow soon after it lifts from the valve seat.

— A V-port plug has a cylinder, called a skirt, that rides up and down in the valve seat ring. The skirt guides the plug and varies the flow area via its shaped openings.

Port — The opening in the valve seat.

Pressure drop (critical) — The flow of a gaseous controlled fluid through the valve increases as the pressure drop increases until reaching a critical point. This point is the critical pressure drop, denoted $\Delta P_{Critical}$.

$\Delta P_{Critical}$ = 50% x P_1 (Absolute upstream pressure)

When critical pressure is reached, any increase in pressure is dissipated in noise and cavitation rather than increase in flow. The noise and cavitation can destroy valve and adjacent piping components.

Pressure drop — The difference in upstream and downstream pressures of the fluid flowing through the valve. Pressure drop is denoted ΔP.

Proportional band — As applied to pneumatic control systems, the change in the controlled variable required to change the controller output pressure from 3 to 13 psi. Usually expressed as a percentage of sensor span.

Quick-opening — A valve which provides maximum possible flow as soon as the stem starts to lift the disc from the valve seat.

RA — See Reverse acting and Return air.

Relative humidity — The ratio of the measured amount of moisture in the air to the maximum amount of moisture the air can hold at the same temperature and pressure. Relative humidity is expressed in percent of saturation. Air with a relative humidity of 35, for example, is holding 35 percent of the moisture that it is capable of holding at that temperature and pressure.

Restrictor — A device in an air line that limits the flow of air.

Return air (RA) — Air from the conditioned space which is passed through the air handling unit and returned to the conditioned space.

Reverse acting (RA) — A reverse-acting thermostat or controller decreases the branchline pressure on an increase in the measured variable and increases the branchline pressure on a decrease in the variable. A reverse-acting valve actuator retracts on an increase in branchline pressure and extends on a decrease in pressure.

scfm — standard cubic feet per minute.

Seat — The stationary part of the valve body that has a raised lip to contact the valve disc when closing off flow of the controlled fluid.

Sensing element — A device that detects and measures the controlled variable (e.g., temperature, humidity).

Setpoint — The value on the controller scale at which the controller is set (e.g., the desired room temperature set on a thermostat). The desired control point.

Sling psychrometer — A device commonly used to measure the wet-bulb temperature. It consists of two identical thermometers mounted on a common base. The base is pivoted on a handle so it can be whirled through the air. One thermometer measures dry-bulb temperature. The bulb of the other thermometer is encased in a water-soaked wick. This thermometer measures wet-bulb temperature. Some models provide slide rule construction which allows converting the dry-bulb and wet-bulb readings to relative humidity.

Although commonly used, sling psychrometers can cause inaccurate readings, especially at low relative humidities, because of factors such as inadequate air flow past the wet-bulb wick, too much wick wetting from a continuous water feed, thermometer calibration error, and human error. To take more accurate readings, especially in low relative humidity conditions, motorized psychrometers are recommended.

Stem — The shaft that runs through the valve bonnet and connects an actuator to the valve plug.

Thermostat — A device that responds to changes in temperature and outputs a control signal (branchline pressure). Usually mounted on a wall in the controlled space.

Throttling range — Same as proportional band, except expressed in values of the controlled variable (e.g., degrees, percent relative humidity, pounds per square inch) rather than in percent.

Tight shut-off/close-off — A valve condition in which virtually no leakage of the controlled fluid occurs in the closed position. Generally, only single-seated valves provide tight shut-off. Double-seated valves typically have a one to three percent leakage in the closed position.

Trim — All parts of the valve that contact the controlled fluid. Trim includes the stem, packing, plug, disc, and seat; it does not include the valve body.

Wet-bulb temperature — The temperature read on a thermometer with the mercury bulb encased in a wet wick (stocking or sock) and with an air flow of 900 feet per minute across the wick. Water evaporation causes the temperature reading to be lower than the ambient dry-bulb temperature by an amount proportional to the moisture content of the air. The temperature reduction is sometimes called the evaporative effect. When the reading stops falling, the value read is the wet-bulb temperature.

The wet-bulb and dry-bulb temperatures are the easiest air properties to measure. When they are known, they can be used to determine other air properties on a psychrometric chart.

Product Selection Matrix for CE Sequence Primary/Programmer Relay Modules:

For 230 Vac nominal applications —

Fuel	Burner Type	Relay Module Type
Single	Atmospheric with fan	EC7820
Combination or single	On/Off Controlled Power Burner	EC7830
Combination or single	Full Modulation Power Burner	EC7850

For 120 Vac nominal applications —

Fuel	Burner Type	Relay Module Type
Combination or single	On/Off Controlled Power Burner	RM7830
Combination or single	Full Modulation Power Burner	RM7850

Use the following pages to select the following *required* devices:
Relay Module, 1 per burner
Subbase, 1 per relay module
Purge Timer Card, 1 per relay module
Flame Amplifier, 1 per relay module

Some products are available only through Authorized Flame Safeguard Wholesalers and/or Distributors.

Use the following pages to select the following optional devices:
Keyboard Display module, up to 1 mounted to relay module, remote as desired network and ControlBus™ modules to service selected relays
Miscellaneous, as required to complete installation.

Product Selection Matrix

PRODUCT SELECTION MATRIX FOR EC7820 PROGRAMMER RELAY MODULES:

1.) SELECT A RELAY MODULE

220-240 VAC 50/60 HZ	DESCRIPTION
EC7820A1026	ONE IGNITION ATTEMPT
EC7820A1034	FIVE IGNITION ATTEMPTS

2.) SELECT A SUBBASE

O.S. NO.	DESCRIPTION
Q7800A1005	PANEL MOUNT
Q7800B1003	BURNER/WALL MOUNT
Q7800B1011	BURNER/WALL MOUNT WITH 3 KNOCKOUTS

3.) SELECT A PURGE CARD

O.S. NO.	DESCRIPTION	O.S. NO.	DESCRIPTION
ST7800A1005	TIMING: 2 SECOND	ST7800A1070	TIMING: 2.5 MINUTE
ST7800A1013	TIMING: 7 SECOND	ST7800A1088	TIMING: 4 MINUTE
ST7800A1021	TIMING: 10 SECOND	ST7800A1096	TIMING: 6 MINUTE
ST7800A1039	TIMING: 30 SECOND	ST7800A1104	TIMING: 9 MINUTE
ST7800A1047	TIMING: 40 SECOND	ST7800A1112	TIMING: 12 MINUTE
ST7800A1054	TIMING: 60 SECOND	ST7800A1120	TIMING: 15 MINUTE
ST7800A1062	TIMING: 90 SECOND	ST7800A1138	TIMING: 22 MINUTE
		ST7800A1146	TIMING: 30 MINUTE

4.) SELECT A FLAME AMPLIFIER

O.S. NO.	DESCRIPTION	CHECKING	USE WITH
R7847A1025	1 SECOND FFRT	NONE	FLAME ROD
R7847A1033	2 SECOND FFRT	NONE	FLAME ROD
R7847A1074	1 SECOND FFRT	NONE	FLAME ROD*
R7847A1082	2 SECOND FFRT	NONE	FLAME ROD*, C7012A, C
R7847B1023	1 SECOND FFRT	AMPLICHECK®	FLAME ROD
R7847B1031	2 SECOND FFRT	AMPLICHECK®	FLAME ROD
R7847B1064	1 SECOND FFRT	AMPLICHECK®	FLAME ROD*
R7847B1072	2 SECOND FFRT	AMPLICHECK®	FLAME ROD*, C7012A, C
R7849A1015	1 SECOND FFRT	AMPLICHECK®	C7027, C7035
R7849A1023	2 SECOND FFRT	AMPLICHECK®	C7027, C7035
R7849B1013	1 SECOND FFRT	AMPLICHECK®	C7027, C7035
R7849B1021	2 SECOND FFRT	AMPLICHECK®	C7027, C7035
R7861A1026	2 SECOND FFRT	DYNAMIC SELF-CHECK	C7061A, F, M**
R7861A1034	1 SECOND FFRT	DYNAMIC SELF-CHECK	C7061A, F, M**
R7886A1001	2 SECOND FFRT	DYNAMIC SELF-CHECK	C7076A, F

* FLAME ROD LEADWIRE RUNS GREATER THAN 50FT (1524 CM) OR PARALLEL C7012 A,C.
** EC APPLICATIONS REQUIRE A 220-240 VAC TO 120 VAC, STEP DOWN, 10VA TRANSFORMER.

5.) SELECT OPTIONAL COMPONENTS

KEYBOARD DISPLAY MODULE

O.S. NO.	DESCRIPTION
S7800A1001	ENGLISH LANGUAGE
S7800A1035	FRENCH LANGUAGE
S7800A1043	GERMAN LANGUAGE
S7800A1050	ITALIAN LANGUAGE
S7800A1068	SPANISH LANGUAGE
S7800A1118	KATAKANA (JAPANESE) LANGUAGE
S7800A1126	PORTUGUESE LANGUAGE

COMMUNICATIONS

O.S. NO.	DESCRIPTION
S7810A1009	DATA CONTROLBUS® MODULE (IF NO KEYBOARD DISPLAY IS USED)
S7810M1029	MODBUS MODULE - CE APPROVAL

MISCELLANEOUS

O.S. NO.	DESCRIPTION
S7820A1007	REMOTE RESET MODULE
203541	DATA CONTROLBUS CONNECTOR, 5-WIRE
203765	REMOTE DISPLAY MOUNTING BRACKET
221729	DUST COVER, RELAY MODULE
50023821-001	KEYBOARD DISPLAY MODULE COVER, NEMA 4,
204718B	KEYBOARD DISPLAY MODULE COVER, CLEAR
50023821-002	KEYBOARD DISPLAY MODULE COVER, NEMA 4, CLEAR WITH RESET BUTTON
205321B	FLUSH DISPLAY MOUNTING KIT
221818A	EXTENSION CABLE, DISPLAY 5FT (1524MM)
221818C	EXTENSION CABLE, DISPLAY 10FT (3048MM)

M15516G

PRODUCT SELECTION MATRIX FOR EC/RM7830 PROGRAMMER RELAY MODULES:

1.) SELECT A RELAY MODULE

220-240 VAC 50/60 HZ	120VAC 50/60 HZ	DESCRIPTION
EC7830A1033	RM7830A1003	POST-PURGE 2 SECONDS
EC7830A1041	RM7830A1029	POST-PURGE 30 SECONDS
EC7830A1066	RM7830A1011	POST-PURGE 15 SECONDS

2.) SELECT A SUBBASE

O.S. NO.	DESCRIPTION
Q7800A1005	PANEL MOUNT
Q7800B1003	BURNER/WALL MOUNT
Q7800B1011	BURNER/WALL MOUNT WITH 3 KNOCKOUTS

3.) SELECT A PURGE CARD

O.S. NO.	DESCRIPTION	O.S. NO.	DESCRIPTION
ST7800A1005	TIMING: 2 SECOND	ST7800A1070	TIMING: 2.5 MINUTE
ST7800A1013	TIMING: 7 SECOND	ST7800A1088	TIMING: 4 MINUTE
ST7800A1021	TIMING: 10 SECOND	ST7800A1096	TIMING: 6 MINUTE
ST7800A1039	TIMING: 30 SECOND	ST7800A1104	TIMING: 9 MINUTE
ST7800A1047	TIMING: 40 SECOND	ST7800A1112	TIMING: 12 MINUTE
ST7800A1054	TIMING: 60 SECOND	ST7800A1120	TIMING: 15 MINUTE
ST7800A1062	TIMING: 90 SECOND	ST7800A1138	TIMING: 22 MINUTE
		ST7800A1146	TIMING: 30 MINUTE

4.) SELECT A FLAME AMPLIFIER

O.S. NO.	DESCRIPTION	CHECKING	USE WITH
R7847A1025	1 SECOND FFRT	NONE	FLAME ROD
R7847A1033	2 SECOND FFRT	NONE	FLAME ROD
R7847A1074	1 SECOND FFRT	NONE	FLAME ROD*
R7847A1082	2 SECOND FFRT	NONE	FLAME ROD*, C7012A, C
R7847B1023	1 SECOND FFRT	AMPLICHECK®	FLAME ROD
R7847B1031	2 SECOND FFRT	AMPLICHECK®	FLAME ROD
R7847B1064	1 SECOND FFRT	AMPLICHECK®	FLAME ROD*
R7847B1072	2 SECOND FFRT	AMPLICHECK®	FLAME ROD*, C7012A, C
R7849A1015	1 SECOND FFRT	AMPLICHECK®	C7027, C7035
R7849A1023	2 SECOND FFRT	AMPLICHECK®	C7027, C7035
R7849B1013	1 SECOND FFRT	AMPLICHECK®	C7027, C7035
R7849B1021	2 SECOND FFRT	AMPLICHECK®	C7027, C7035
R7861A1026	2 SECOND FFRT	DYNAMIC SELF-CHECK	C7061A, F, M**
R7861A1034	1 SECOND FFRT	DYNAMIC SELF-CHECK	C7061A, F, M**
R7886A1001	2 SECOND FFRT	DYNAMIC SELF-CHECK	C7076A, F

* FLAME ROD LEADWIRE RUNS GREATER THAN 50FT (1524 CM) OR PARALLEL C7012 A,C.
** EC APPLICATIONS REQUIRE A 220-240 VAC TO 120 VAC, STEP DOWN, 10VA TRANSFORMER.

5.) SELECT OPTIONAL COMPONENTS

KEYBOARD DISPLAY MODULE

O.S. NO.	DESCRIPTION
S7800A1001	ENGLISH LANGUAGE
S7800A1035	FRENCH LANGUAGE
S7800A1043	GERMAN LANGUAGE
S7800A1050	ITALIAN LANGUAGE
S7800A1068	SPANISH LANGUAGE
S7800A1118	KATAKANA (JAPANESE) LANGUAGE
S7800A1126	PORTUGUESE LANGUAGE

COMMUNICATIONS

O.S. NO.	DESCRIPTION
S7810A1009	DATA CONTROLBUS® MODULE (IF NO KEYBOARD DISPLAY IS USED)
S7810M1029	MODBUS MODULE - CE APPROVAL

MISCELLANEOUS

O.S. NO.	DESCRIPTION
S7820A1007	REMOTE RESET MODULE
203541	DATA CONTROLBUS CONNECTOR, 5-WIRE
203765	REMOTE DISPLAY MOUNTING BRACKET
221729	DUST COVER, RELAY MODULE
50023821-001	KEYBOARD DISPLAY MODULE COVER, NEMA 4
204718B	KEYBOARD DISPLAY MODULE COVER, CLEAR
50023821-002	KEYBOARD DISPLAY MODULE COVER, NEMA 4, CLEAR WITH RESET BUTTON
205321B	FLUSH DISPLAY MOUNTING KIT
221818A	EXTENSION CABLE, DISPLAY 5FT (1524MM)
221818C	EXTENSION CABLE, DISPLAY 10FT (3048MM)

M15517H

Product Selection Matrix

PRODUCT SELECTION MATRIX FOR EC/RM7850 PROGRAMMER RELAY MODULES:

1.) SELECT A RELAY MODULE

220-240 VAC 50/60 HZ	120VAC 50/60 HZ	DESCRIPTION
EC7850A1064		DYNAMIC AIR DAMPER CHECK
EC7850A1072	RM7850A1001	POST-PURGE 2 SECONDS
EC7850A1080	RM7850A1027	POST-PURGE 30 SECONDS
EC7850A1122	RM7850A1019	POST-PURGE 15 SECONDS

2.) SELECT A SUBBASE

O.S. NO.	DESCRIPTION
Q7800A1005	PANEL MOUNT
Q7800B1003	BURNER/WALL MOUNT
Q7800B1011	BURNER/WALL MOUNT WITH 3 KNOCKOUTS

3.) SELECT A PURGE CARD

O.S. NO.	DESCRIPTION	O.S. NO.	DESCRIPTION
ST7800A1005	TIMING: 2 SECOND	ST7800A1070	TIMING: 2.5 MINUTE
ST7800A1013	TIMING: 7 SECOND	ST7800A1088	TIMING: 4 MINUTE
ST7800A1021	TIMING: 10 SECOND	ST7800A1096	TIMING: 6 MINUTE
ST7800A1039	TIMING: 30 SECOND	ST7800A1104	TIMING: 9 MINUTE
ST7800A1047	TIMING: 40 SECOND	ST7800A1112	TIMING: 12 MINUTE
ST7800A1054	TIMING: 60 SECOND	ST7800A1120	TIMING: 15 MINUTE
ST7800A1062	TIMING: 90 SECOND	ST7800A1138	TIMING: 22 MINUTE
		ST7800A1146	TIMING: 30 MINUTE

4.) SELECT A FLAME AMPLIFIER

O.S. NO.	DESCRIPTION	CHECKING	USE WITH
R7847A1025	1 SECOND FFRT	NONE	FLAME ROD
R7847A1033	2 SECOND FFRT	NONE	FLAME ROD
R7847A1074	1 SECOND FFRT	NONE	FLAME ROD*
R7847A1082	2 SECOND FFRT	NONE	FLAME ROD*, C7012A, C
R7847B1023	1 SECOND FFRT	AMPLICHECK®	FLAME ROD
R7847B1031	2 SECOND FFRT	AMPLICHECK®	FLAME ROD
R7847B1064	1 SECOND FFRT	AMPLICHECK®	FLAME ROD*
R7847B1072	2 SECOND FFRT	AMPLICHECK®	FLAME ROD*, C7012A, C
R7849A1015	1 SECOND FFRT	AMPLICHECK®	C7027, C7035
R7849A1023	2 SECOND FFRT	AMPLICHECK®	C7027, C7035
R7849B1013	1 SECOND FFRT	AMPLICHECK®	C7027, C7035
R7849B1021	2 SECOND FFRT	AMPLICHECK®	C7027, C7035
R7861A1026	2 SECOND FFRT	DYNAMIC SELF-CHECK	C7061A, F, M**
R7861A1034	1 SECOND FFRT	DYNAMIC SELF-CHECK	C7061A, F, M**
R7886A1001	2 SECOND FFRT	DYNAMIC SELF-CHECK	C7076A, F

* FLAME ROD LEADWIRE RUNS GREATER THAN 50FT (1524 CM) OR PARALLEL C7012A,C.
** EC APPLICATIONS REQUIRE A 220-240 VAC TO 120 VAC, STEP DOWN, 10VA TRANSFORMER.

5.) SELECT OPTIONAL COMPONENTS

KEYBOARD DISPLAY MODULE

O.S. NO.	DESCRIPTION
S7800A1001	ENGLISH LANGUAGE
S7800A1035	FRENCH LANGUAGE
S7800A1043	GERMAN LANGUAGE
S7800A1050	ITALIAN LANGUAGE
S7800A1068	SPANISH LANGUAGE
S7800A1118	KATAKANA (JAPANESE) LANGUAGE
S7800A1126	PORTUGUESE LANGUAGE

COMMUNICATIONS

O.S. NO.	DESCRIPTION
S7810A1009	DATA CONTROLBUS® MODULE (IF NO KEYBOARD DISPLAY IS USED)
S7810M1029	MODBUS MODULE - CE APPROVAL

MISCELLANEOUS

O.S. NO.	DESCRIPTION
S7820A1007	REMOTE RESET MODULE
203541	DATA CONTROLBUS CONNECTOR, 5-WIRE
203765	REMOTE DISPLAY MOUNTING BRACKET
221729	DUST COVER, RELAY MODULE
50023821-001	KEYBOARD DISPLAY MODULE COVER, NEMA 4
204718B	KEYBOARD DISPLAY MODULE COVER, CLEAR
50023821-002	KEYBOARD DISPLAY MODULE COVER, NEMA 4, CLEAR WITH RESET BUTTON
205321B	FLUSH DISPLAY MOUNTING KIT
221818A	EXTENSION CABLE, DISPLAY 5FT (1524MM)
221818C	EXTENSION CABLE, DISPLAY 10FT (3048MM)

M15519G

PRODUCT SELECTION MATRIX FOR EC/RM7823 FLAME SWITCH RELAY MODULES:

1.) SELECT A RELAY MODULE

220-240 VAC 50/60 HZ	120VAC 50/60 HZ
EC7823A1004	RM7823A1016

2.) SELECT A SUBBASE

O.S. NO.	DESCRIPTION
Q7800A1005	PANEL MOUNT
Q7800B1003	BURNER/WALL MOUNT
Q7800B1011	BURNER/WALL MOUNT WITH 3 KNOCKOUTS

3.) SELECT A FLAME AMPLIFIER

O.S. NO.	DESCRIPTION ***	CHECKING	USE WITH
R7847A1025	0.8 SECOND FFRT	NONE	FLAME ROD
R7847A1033	3.0 SECOND FFRT	NONE	FLAME ROD
R7847A1074	0.8 SECOND FFRT	NONE	FLAME ROD*
R7847A1082	3.0 SECOND FFRT	NONE	FLAME ROD*, C7012A, C
R7847B1023	0.8 SECOND FFRT	AMPLICHECK®	FLAME ROD
R7847B1031	3.0 SECOND FFRT	AMPLICHECK®	FLAME ROD
R7847B1064	0.8 SECOND FFRT	AMPLICHECK®	FLAME ROD*
R7847B1072	3.0 SECOND FFRT	AMPLICHECK®	FLAME ROD*, C7012A, C
R7847C1005	3.0 SECOND FFRT	DYNAMIC SELF-CHECK	C7012E,F**
R7849A1015	0.8 SECOND FFRT	NONE	C7027, C7035
R7849A1023	3.0 SECOND FFRT	NONE	C7027, C7035
R7849B1013	0.8 SECOND FFRT	AMPLICHECK®	C7027, C7035
R7849B1021	3.0 SECOND FFRT	AMPLICHECK®	C7027, C7035
R7851B1000	3.0 SECOND FFRT	AMPLICHECK®	C7927, C7962
R7851B1018	0.8 SECOND FFRT	AMPLICHECK®	C7927, C7962
R7851C1008	3.0 SECOND FFRT	DYNAMIC SELF-CHECK	C7961E,F
R7852A1001	3.0 SECOND FFRT	NONE	C7915
R7852B1009	3.0 SECOND FFRT	AMPLICHECK®	C7915
R7861A1026	3.0 SECOND FFRT	DYNAMIC SELF-CHECK	C7061A, F, M**
R7861A1034	0.8 SECOND FFRT	DYNAMIC SELF-CHECK	C7061A, F, M**
R7886A1001	3.0 SECOND FFRT	DYNAMIC SELF-CHECK	C7076A, D

* FLAME ROD LEADWIRE RUNS GREATER THAN 50FT (1524 CM) OR PARALLEL C7012A,C.
** EC APPLICATIONS REQUIRE A 220-240 VAC TO 120 VAC, STEP DOWN, 10VA TRANSFORMER.

4.) SELECT OPTIONAL COMPONENTS

KEYBOARD DISPLAY MODULE

O.S. NO.	DESCRIPTION
S7800A1001	ENGLISH LANGUAGE
S7800A1035	FRENCH LANGUAGE
S7800A1043	GERMAN LANGUAGE
S7800A1050	ITALIAN LANGUAGE
S7800A1068	SPANISH LANGUAGE
S7800A1118	KATAKANA (JAPANESE) LANGUAGE
S7800A1126	PORTUGUESE LANGUAGE

COMMUNICATIONS

O.S. NO.	DESCRIPTION
S7810A1009	DATA CONTROLBUS® MODULE (IF NO KEYBOARD DISPLAY IS USED)
S7810M1003	MODBUS MODULE

MISCELLANEOUS

O.S. NO.	DESCRIPTION
S7820A1007	REMOTE RESET MODULE
S7830A1005	EXPANDED ANNUNCIATIOR (120 VAC, 50/60 HZ)
203541	DATA CONTROLBUS CONNECTOR, 5-WIRE
203765	REMOTE DISPLAY MOUNTING BRACKET
221729	DUST COVER, RELAY MODULE
50023821-001	KEYBOARD DISPLAY MODULE COVER, NEMA 4
204718B	KEYBOARD DISPLAY MODULE COVER, CLEAR
50023821-002	KEYBOARD DISPLAY MODULE COVER, NEMA 4, CLEAR WITH RESET BUTTON
205321B	FLUSH DISPLAY MOUNTING KIT
221818A	EXTENSION CABLE, DISPLAY 5FT (1524MM)
221818C	EXTENSION CABLE, DISPLAY 10FT (3048MM)

M15520F

Product Selection Matrix

PRODUCT SELECTION MATRIX FOR RM7824A 24VDC PRIMARY CONTROL RELAY MODULES:

1.) SELECT A RELAY MODULE

RM7824A1006	24VDC

2.) SELECT A SUBBASE

O.S. NO.	DESCRIPTION
Q7800A1005	PANEL MOUNT
Q7800B1003	BURNER/WALL MOUNT
Q7800B1011	BURNER/WALL MOUNT WITH 3 KNOCKOUTS

3.) SELECT A FLAME AMPLIFIER

O.S. NO.	DESCRIPTION	CHECKING	USE WITH
R7824C1002	3.0 SECOND FFRT	DYNAMIC SELF-CHECK	C7024E, F
R7851B1000	3.0 SECOND FFRT	AMPLICHECK®	C7927, C7962
R7851B1018	0.8 SECOND FFRT	AMPLICHECK®	C7927, C7962
R7852A1001	3.0 SECOND FFRT	NONE	C7915
R7852B1009	0.8 SECOND FFRT	AMPLICHECK®	C7915

4.) SELECT OPTIONAL COMPONENTS

KEYBOARD DISPLAY MODULE

O.S. NO.	DESCRIPTION
S7800A1001	ENGLISH LANGUAGE
S7800A1035	FRENCH LANGUAGE
S7800A1043	GERMAN LANGUAGE
S7800A1050	ITALIAN LANGUAGE
S7800A1068	SPANISH LANGUAGE
S7800A1118	KATAKANA (JAPANESE) LANGUAGE
S7800A1126	PORTUGUESE LANGUAGE

COMMUNICATIONS

O.S. NO.	DESCRIPTION
S7810A1009	DATA CONTROLBUS® MODULE (IF NO KEYBOARD DISPLAY IS USED)
S7810M1003	MODBUS MODULE

MISCELLANEOUS

O.S. NO.	DESCRIPTION
S7820A1007	REMOTE RESET MODULE
203541	DATA CONTROLBUS CONNECTOR, 5-WIRE
203765	REMOTE DISPLAY MOUNTING BRACKET
221729	DUST COVER, RELAY MODULE
50023821-001	KEYBOARD DISPLAY MODULE COVER, NEMA 4
204718B	KEYBOARD DISPLAY MODULE COVER, CLEAR
50023821-002	KEYBOARD DISPLAY MODULE COVER, NEMA 4, CLEAR WITH RESET BUTTON
205321B	FLUSH DISPLAY MOUNTING KIT
221818A	EXTENSION CABLE, DISPLAY 5FT (1524MM)
221818C	EXTENSION CABLE, DISPLAY 10FT (3048MM)

M15521D

PRODUCT SELECTION MATRIX FOR RM7885 MANUAL START PRIMARY RELAY MODULES:

1.) SELECT A RELAY MODULE

120VAC 50/60 HZ	DESCRIPTION
RM7885A1015	SEMI AUTOMATIC PRIMARY

2.) SELECT A SUBBASE

O.S. NO.	DESCRIPTION
Q7800A1005	PANEL MOUNT
Q7800B1003	BURNER/WALL MOUNT
Q7800B1011	BURNER/WALL MOUNT WITH 3 KNOCKOUTS

3.) SELECT A FLAME AMPLIFIER

O.S. NO.	DESCRIPTION***	CHECKING	USE WITH
R7847A1025	0.8 SECOND FFRT	NONE	FLAME ROD
R7847A1033	3.0 SECOND FFRT	NONE	FLAME ROD
R7847A1074	0.8 SECOND FFRT	NONE	FLAME ROD*
R7847A1082	3.0 SECOND FFRT	NONE	FLAME ROD*, C7012A, C
R7847B1023	0.8 SECOND FFRT	AMPLICHECK®	FLAME ROD
R7847B1031	3.0 SECOND FFRT	AMPLICHECK®	FLAME ROD
R7847B1064	0.8 SECOND FFRT	AMPLICHECK®	FLAME ROD*
R7847B1072	3.0 SECOND FFRT	AMPLICHECK®	FLAME ROD*, C7012A, C
R7847C1005	3.0 SECOND FFRT	DYNAMIC SELF-CHECK	C7012E, F
R7849A1015	0.8 SECOND FFRT	NONE	C7027, C7035
R7849A1023	3.0 SECOND FFRT	NONE	C7027, C7035
R7849B1013	0.8 SECOND FFRT	AMPLICHECK®	C7027, C7035
R7849B1021	3.0 SECOND FFRT	AMPLICHECK®	C7027, C7035
R7851B1000	3.0 SECOND FFRT	AMPLICHECK®	C7927, C7962
R7851B1018	0.8 SECOND FFRT	AMPLICHECK®	C7927, C7962
R7851C1008	3.0 SECOND FFRT	DYNAMIC SELF-CHECK	C7961E,F
R7852A1001	3.0 SECOND FFRT	NONE	C7915
R7852B1009	3.0 SECOND FFRT	AMPLICHECK®	C7915
R7861A1026	3.0 SECOND FFRT	DYNAMIC SELF-CHECK	C7061A, F, M
R7861A1034	0.8 SECOND FFRT	DYNAMIC SELF-CHECK	C7061A, F, M
R7886A1001	3.0 SECOND FFRT	DYNAMIC SELF-CHECK	C7076A, D

* FLAME ROD LEADWIRE RUNS GREATER THAN 50FT (1524 CM) OR PARALLEL C7012A,C.

4.) SELECT OPTIONAL COMPONENTS

KEYBOARD DISPLAY MODULE

O.S. NO.	DESCRIPTION
S7800A1001	ENGLISH LANGUAGE
S7800A1035	FRENCH LANGUAGE
S7800A1043	GERMAN LANGUAGE
S7800A1050	ITALIAN LANGUAGE
S7800A1068	SPANISH LANGUAGE
S7800A1118	KATAKANA (JAPANESE) LANGUAGE
S7800A1126	PORTUGUESE LANGUAGE

COMMUNICATIONS

O.S. NO.	DESCRIPTION
S7810A1009	DATA CONTROLBUS® MODULE (IF NO KEYBOARD DISPLAY IS USED)
S7810M1003	MODBUS MODULE

MISCELLANEOUS

O.S. NO.	DESCRIPTION
S7820A1007	REMOTE RESET MODULE
203541	DATA CONTROLBUS CONNECTOR, 5-WIRE
203765	REMOTE DISPLAY MOUNTING BRACKET
221729	DUST COVER, RELAY MODULE
50023821-001	KEYBOARD DISPLAY MODULE COVER, NEMA 4
204718B	KEYBOARD DISPLAY MODULE COVER, CLEAR
50023821-002	KEYBOARD DISPLAY MODULE COVER, NEMA 4, CLEAR WITH RESET BUTTON
205321B	FLUSH DISPLAY MOUNTING KIT
221818A	EXTENSION CABLE, DISPLAY 5FT (1524MM)
221818C	EXTENSION CABLE, DISPLAY 10FT (3048MM)

M15522F

Product Selection Matrix

PRODUCT SELECTION MATRIX FOR RM7888A SPECIAL FUNCTION PRIMARY CONTROL RELAY MODULES:

1.) SELECT A RELAY MODULE

120VAC 50/60 HZ	DESCRIPTION
RM7888A1019	INDUSTRIAL PRIMARY CONTROL (COMPONENT UL APPROVED)
RM7888A1027	INDUSTRIAL PRIMARY CONTROL (COMPONENT UL APPROVED)

2.) SELECT A SUBBASE

O.S. NO.	DESCRIPTION
Q7800A1005	PANEL MOUNT
Q7800B1003	BURNER/WALL MOUNT
Q7800B1011	BURNER/WALL MOUNT WITH 3 KNOCKOUTS

3.) SELECT A FLAME AMPLIFIER

O.S. NO.	DESCRIPTION	CHECKING	USE WITH
R7847A1025	0.8 SECOND FFRT	NONE	FLAME ROD
R7847A1033	3.0 SECOND FFRT	NONE	FLAME ROD
R7847A1074	0.8 SECOND FFRT	NONE	FLAME ROD*
R7847A1082	3.0 SECOND FFRT	NONE	FLAME ROD*, C7012A, C
R7847B1023	0.8 SECOND FFRT	AMPLICHECK®	FLAME ROD
R7847B1031	3.0 SECOND FFRT	AMPLICHECK®	FLAME ROD
R7847B1064	0.8 SECOND FFRT	AMPLICHECK®	FLAME ROD*
R7847B1072	3.0 SECOND FFRT	AMPLICHECK®	FLAME ROD*, C7012A, C
R7847C1005	3.0 SECOND FFRT	DYNAMIC SELF-CHECK	C7012E, F
R7849A1015	0.8 SECOND FFRT	NONE	C7027, C7035
R7849A1023	3.0 SECOND FFRT	NONE	C7027, C7035
R7849B1013	0.8 SECOND FFRT	AMPLICHECK®	C7027, C7035
R7849B1021	3.0 SECOND FFRT	AMPLICHECK®	C7027, C7035
R7851B1000	3.0 SECOND FFRT	AMPLICHECK®	C7927, C7962
R7851B1018	0.8 SECOND FFRT	AMPLICHECK®	C7927, C7962
R7851C1008	3.0 SECOND FFRT	DYNAMIC SELF-CHECK	C7961E, F
R7852A1001	3.0 SECOND FFRT	NONE	C7915
R7852B1009	3.0 SECOND FFRT	AMPLICHECK®	C7915
R7861A1026	3.0 SECOND FFRT	DYNAMIC SELF-CHECK	C7061A, F, M
R7861A1034	0.8 SECOND FFRT	DYNAMIC SELF-CHECK	C7061A, F, M
R7886A1001	3.0 SECOND FFRT	DYNAMIC SELF-CHECK	C7076A, D

* FLAME ROD LEADWIRE RUNS GREATER THAN 50FT (1524 CM) OR PARALLEL C7012A,C.

4.) SELECT OPTIONAL COMPONENTS

KEYBOARD DISPLAY MODULE

O.S. NO.	DESCRIPTION
S7800A1001	ENGLISH LANGUAGE
S7800A1035	FRENCH LANGUAGE
S7800A1043	GERMAN LANGUAGE
S7800A1050	ITALIAN LANGUAGE
S7800A1068	SPANISH LANGUAGE
S7800A1118	KATAKANA (JAPANESE) LANGUAGE
S7800A1126	PORTUGUESE LANGUAGE

COMMUNICATIONS

O.S. NO.	DESCRIPTION
S7810A1009	DATA CONTROLBUS® MODULE (IF NO KEYBOARD DISPLAY IS USED)
S7810M1003	MODBUS MODULE

MISCELLANEOUS

O.S. NO.	DESCRIPTION
S7820A1007	REMOTE RESET MODULE
203541	DATA CONTROLBUS CONNECTOR, 5-WIRE
203765	REMOTE DISPLAY MOUNTING BRACKET
221729	DUST COVER, RELAY MODULE
50023821-001	KEYBOARD DISPLAY MODULE COVER, NEMA 4
204718B	KEYBOARD DISPLAY MODULE COVER, CLEAR
50023821-002	KEYBOARD DISPLAY MODULE COVER, NEMA 4, CLEAR WITH RESET BUTTON
205321B	FLUSH DISPLAY MOUNTING KIT
221818A	EXTENSION CABLE, DISPLAY 5FT (1524MM)
221818C	EXTENSION CABLE, DISPLAY 10FT (3048MM)

M15523F

PRODUCT SELECTION MATRIX FOR EC/RM7890 ON/OFF PRIMARY CONTROL RELAY MODULES:

1.) SELECT A RELAY MODULE

220-240 VAC 50/60 HZ	120VAC 50/60 HZ	DESCRIPTION
EC7890A1011	RM7890A1015	
	RM7890A1031	30 SECOND PFEP
	RM7890A1056	FOR VALVE PROVING APPLICATIONS
	RM7890A1064‡	
EC7890B1010	RM7890B1014	WITH SHUTTER DRIVE
	RM7890B1030	WITH SHUTTER DRIVE AND FULL PFEP
	RM7890B1048	WITH SHUTTER DRIVE - FOR VALVE PROVING APPLICATIONS
	RM7890B1055++	WITH SHUTTER DRIVE
	RM7890C1005	STANDING PILOT APPLICATIONS WITH FLAME RODS ONLY
	RM7890D1004	INFRARED HEATER ONLY 15 OR 30 PREF

‡ CE APPROVED
++ NORTH AMERICAN AND CE APPROVED

2.) SELECT A SUBBASE

O.S. NO.	DESCRIPTION
Q7800A1005	PANEL MOUNT
Q7800B1003	BURNER/WALL MOUNT
Q7800B1011	BURNER/WALL MOUNT WITH 3 KNOCKOUTS

3.) SELECT A FLAME AMPLIFIER

O.S. NO.	DESCRIPTION***	CHECKING	USE WITH
R7847A1025	0.8 SECOND FFRT	NONE	FLAME ROD
R7847A1033	3.0 SECOND FFRT	NONE	FLAME ROD
R7847A1074	0.8 SECOND FFRT	NONE	FLAME ROD*
R7847A1082	3.0 SECOND FFRT	NONE	FLAME ROD*, C7012A, C
R7847B1023	0.8 SECOND FFRT	AMPLICHECK®	FLAME ROD
R7847B1031	3.0 SECOND FFRT	AMPLICHECK®	FLAME ROD
R7847B1064	0.8 SECOND FFRT	AMPLICHECK®	FLAME ROD*
R7847B1072	3.0 SECOND FFRT	AMPLICHECK®	FLAME ROD*, C7012A, C
R7847C1005	3.0 SECOND FFRT	DYNAMIC SELF-CHECK	C7012E, F**
R7849A1015	0.8 SECOND FFRT	NONE	C7027, C7035
R7849A1023	3.0 SECOND FFRT	NONE	C7027, C7035
R7849B1013	0.8 SECOND FFRT	AMPLICHECK®	C7027, C7035
R7849B1021	3.0 SECOND FFRT	AMPLICHECK®	C7027, C7035
R7851B1000	3.0 SECOND FFRT	AMPLICHECK®	C7927, C7962
R7851B1018	0.8 SECOND FFRT	AMPLICHECK®	C7927, C7962
R7851C1008	3.0 SECOND FFRT	DYNAMIC SELF-CHECK	C7961E, F
R7852A1001	3.0 SECOND FFRT	NONE	C7915
R7852B1009	3.0 SECOND FFRT	AMPLICHECK®	C7915
R7861A1026	3.0 SECOND FFRT	DYNAMIC SELF-CHECK	C7061A, F, M**
R7861A1034	0.8 SECOND FFRT	DYNAMIC SELF-CHECK	C7061A, F, M**
R7886A1001	3.0 SECOND FFRT	DYNAMIC SELF-CHECK	C7076A, D

* FLAME ROD LEADWIRE RUNS GREATER THAN 50FT (1524 CM) OR PARALLEL C7012A,C.
** EC APPLICATIONS REQUIRE A 220-240 VAC TO 120 VAC, STEP DOWN, 10VA TRANSFORMER.
*** FFRT FOR CE APPROVED CONTROLS 1 SEC. OR 2 SEC.

4.) SELECT OPTIONAL COMPONENTS

KEYBOARD DISPLAY MODULE

O.S. NO.	DESCRIPTION
S7800A1001	ENGLISH LANGUAGE
S7800A1035	FRENCH LANGUAGE
S7800A1043	GERMAN LANGUAGE
S7800A1050	ITALIAN LANGUAGE
S7800A1068	SPANISH LANGUAGE
S7800A1118	KATAKANA (JAPANESE) LANGUAGE
S7800A1126	PORTUGUESE LANGUAGE
S7800A1142	ENGLISH (REQUIRED TO PROGRAM VP TIMINGS)
S7800A1167	SPANISH (REQUIRED TO PROGRAM VP TIMINGS)

COMMUNICATIONS

O.S. NO.	DESCRIPTION
S7810A1009	DATA CONTROLBUS® MODULE (IF NO KEYBOARD DISPLAY IS USED)
S7810M1003	MODBUS MODULE
S7810M1029	MODBUS MODULE - CE APPROVED

MISCELLANEOUS

O.S. NO.	DESCRIPTION
S7820A1007	REMOTE RESET MODULE
203541	DATA CONTROLBUS CONNECTOR, 5-WIRE
203765	REMOTE DISPLAY MOUNTING BRACKET
221729	DUST COVER, RELAY MODULE
50023821-001	KEYBOARD DISPLAY MODULE COVER, NEMA 4
204718B	KEYBOARD DISPLAY MODULE COVER, CLEAR
50023821-002	KEYBOARD DISPLAY MODULE COVER, NEMA 4, CLEAR WITH RESET BUTTON
205321B	FLUSH DISPLAY MOUNTING KIT
221818A	EXTENSION CABLE, DISPLAY 5FT (1524MM)
221818C	EXTENSION CABLE, DISPLAY 10FT (3048MM)

M15524G

Product Selection Matrix

PRODUCT SELECTION MATRIX FOR EC/RM7895 ON/OFF WITH PURGE PRIMARY RELAY MODULES:

1.) SELECT A RELAY MODULE

220-240 VAC 50/60 HZ	120VAC 50/60 HZ	DESCRIPTION
	INTERMITTENT PILOT	
EC7895A1010	RM7895A1014	
	RM7895A1048	EARLY SPARK TERMINATION
	RM7895B1013	DYNAMIC AIRFLOW SWITCH CHECK
	INTERRUPTED PILOT	
EC7895C1000	RM7895C1012	
	RM7895C1020	EARLY SPARK TERMINATION
	RM7895D1011	DYNAMIC AIRFLOW SWITCH CHECK
	RM7895E1002	INFRARED HEATER APPLICATIONS, 15/30 SECOND PFEP

2.) SELECT A SUBBASE

O.S. NO.	DESCRIPTION
Q7800A1005	PANEL MOUNT
Q7800B1003	BURNER/WALL MOUNT
Q7800B1011	BURNER/WALL MOUNT WITH 3 KNOCKOUTS

3.) SELECT A PURGE CARD

O.S. NO.	DESCRIPTION	O.S. NO.	DESCRIPTION
ST7800A1005	TIMING: 2 SECOND	ST7800A1070	TIMING: 2.5 MINUTE
ST7800A1013	TIMING: 7 SECOND	ST7800A1088	TIMING: 4 MINUTE
ST7800A1021	TIMING: 10 SECOND	ST7800A1096	TIMING: 6 MINUTE
ST7800A1039	TIMING: 30 SECOND	ST7800A1104	TIMING: 9 MINUTE
ST7800A1047	TIMING: 40 SECOND	ST7800A1112	TIMING: 12 MINUTE
ST7800A1054	TIMING: 60 SECOND	ST7800A1120	TIMING: 15 MINUTE
ST7800A1062	TIMING: 90 SECOND	ST7800A1138	TIMING: 22 MINUTE
		ST7800A1146	TIMING: 30 MINUTE

4.) SELECT A FLAME AMPLIFIER

O.S. NO.	DESCRIPTION***	CHECKING	USE WITH
R7847A1025	0.8 SECOND FFRT	NONE	FLAME ROD
R7847A1033	3.0 SECOND FFRT	NONE	FLAME ROD
R7847A1074	0.8 SECOND FFRT	NONE	FLAME ROD*
R7847A1082	3.0 SECOND FFRT	NONE	FLAME ROD*, C7012A, C
R7847B1023	0.8 SECOND FFRT	AMPLICHECK®	FLAME ROD
R7847B1031	3.0 SECOND FFRT	AMPLICHECK®	FLAME ROD
R7847B1064	0.8 SECOND FFRT	AMPLICHECK®	FLAME ROD*
R7847B1072	3.0 SECOND FFRT	AMPLICHECK®	FLAME ROD*, C7012A, C
R7847C1005	3.0 SECOND FFRT	DYNAMIC SELF-CHECK	C7012E, F**
R7849A1015	0.8 SECOND FFRT	NONE	C7027, C7035
R7849A1023	3.0 SECOND FFRT	NONE	C7027, C7035
R7849B1013	0.8 SECOND FFRT	AMPLICHECK®	C7027, C7035
R7849B1021	3.0 SECOND FFRT	AMPLICHECK®	C7027, C7035
R7851B1000	3.0 SECOND FFRT	AMPLICHECK®	C7927, C7962
R7851B1018	0.8 SECOND FFRT	AMPLICHECK®	C7927, C7962
R7851C1008	3.0 SECOND FFRT	DYNAMIC SELF-CHECK	C7961E, F
R7851A1001	3.0 SECOND FFRT	NONE	C7915
R7852B1009	3.0 SECOND FFRT	AMPLICHECK®	C7915
R7861A1026	3.0 SECOND FFRT	DYNAMIC SELF-CHECK	C7061A, F, M**
R7861A1034	0.8 SECOND FFRT	DYNAMIC SELF-CHECK	C7061A, F, M**
R7886A1001	3.0 SECOND FFRT	DYNAMIC SELF-CHECK	C7076A, D

* FLAME ROD LEADWIRE RUNS GREATER THAN 50FT (1524 CM) OR PARALLEL C7012A,C.
** EC APPLICATIONS REQUIRE A 220-240 VAC TO 120 VAC, STEP DOWN, 10VA TRANSFORMER.

5.) SELECT OPTIONAL COMPONENTS

KEYBOARD DISPLAY MODULE

O.S. NO.	DESCRIPTION
S7800A1001	ENGLISH LANGUAGE
S7800A1035	FRENCH LANGUAGE
S7800A1043	GERMAN LANGUAGE
S7800A1050	ITALIAN LANGUAGE
S7800A1068	SPANISH LANGUAGE
S7800A1118	KATAKANA (JAPANESE) LANGUAGE
S7800A1126	PORTUGUESE LANGUAGE

COMMUNICATIONS

O.S. NO.	DESCRIPTION
S7810A1009	DATA CONTROLBUS® MODULE (IF NO KEYBOARD DISPLAY IS USED)
S7810M1003	MODBUS MODULE

MISCELLANEOUS

O.S. NO.	DESCRIPTION
S7820A1007	REMOTE RESET MODULE
S7830A1005	EXPANDED ANNUNCIATIOR (120 VAC, 50/60 HZ)
203541	DATA CONTROLBUS CONNECTOR, 5-WIRE
203765	REMOTE DISPLAY MOUNTING BRACKET
221729	DUST COVER, RELAY MODULE
50023821-001	KEYBOARD DISPLAY MODULE COVER, NEMA 4
204718B	KEYBOARD DISPLAY MODULE COVER, CLEAR
50023821-002	KEYBOARD DISPLAY MODULE COVER, NEMA 4, CLEAR WITH RESET BUTTON
205321B	FLUSH DISPLAY MOUNTING KIT
221818A	EXTENSION CABLE, DISPLAY 5FT (1524MM)
221818C	EXTENSION CABLE, DISPLAY 10FT (3048MM)

M15525F

PRODUCT SELECTION MATRIX FOR RM7896 ON/OFF WITH PRE- AND POST-PURGE PRIMARY RELAY MODULES:

1.) SELECT A RELAY MODULE

INTERMITTENT PILOT

120VAC 50/60 HZ	DESCRIPTION
RM7896A1012	
RM7896B1011	DYNAMIC AIRFLOW SWITCH CHECK

INTERRUPTED PILOT

RM7896C1010	
RM7896D1019	DYNAMIC AIRFLOW SWITCH CHECK
RM7896D1027	5 SEC EARLY SPARK TERMINATION, DYNAMIC AIRFLOW SWITCH CHECK AND 60 SEC POST-PURGE

2.) SELECT A SUBBASE

O.S. NO.	DESCRIPTION
Q7800A1005	PANEL MOUNT
Q7800B1003	BURNER/WALL MOUNT
Q7800B1011	BURNER/WALL MOUNT WITH 3 KNOCKOUTS

3.) SELECT A PURGE CARD

O.S. NO.	DESCRIPTION	O.S. NO.	DESCRIPTION
ST7800A1005	TIMING: 2 SECOND	ST7800A1070	TIMING: 2.5 MINUTE
ST7800A1013	TIMING: 7 SECOND	ST7800A1088	TIMING: 4 MINUTE
ST7800A1021	TIMING: 10 SECOND	ST7800A1096	TIMING: 6 MINUTE
ST7800A1039	TIMING: 30 SECOND	ST7800A1104	TIMING: 9 MINUTE
ST7800A1047	TIMING: 40 SECOND	ST7800A1112	TIMING: 12 MINUTE
ST7800A1054	TIMING: 60 SECOND	ST7800A1120	TIMING: 15 MINUTE
ST7800A1062	TIMING: 90 SECOND	ST7800A1138	TIMING: 22 MINUTE
		ST7800A1146	TIMING: 30 MINUTE

4.) SELECT A FLAME AMPLIFIER

O.S. NO.	DESCRIPTION***	CHECKING	USE WITH
R7847A1025	0.8 SECOND FFRT	NONE	FLAME ROD
R7847A1033	3.0 SECOND FFRT	NONE	FLAME ROD
R7847A1074	0.8 SECOND FFRT	NONE	FLAME ROD*
R7847A1082	3.0 SECOND FFRT	NONE	FLAME ROD*, C7012A, C
R7847B1023	0.8 SECOND FFRT	AMPLICHECK®	FLAME ROD
R7847B1031	3.0 SECOND FFRT	AMPLICHECK®	FLAME ROD
R7847B1064	0.8 SECOND FFRT	AMPLICHECK®	FLAME ROD*
R7847B1072	3.0 SECOND FFRT	AMPLICHECK®	FLAME ROD*, C7012A, C
R7847C1005	3.0 SECOND FFRT	DYNAMIC SELF-CHECK	C7012E, F
R7849A1015	0.8 SECOND FFRT	NONE	C7027, C7035
R7849A1023	3.0 SECOND FFRT	NONE	C7027, C7035
R7849B1013	0.8 SECOND FFRT	AMPLICHECK®	C7027, C7035
R7849B1021	3.0 SECOND FFRT	AMPLICHECK®	C7027, C7035
R7851B1000	3.0 SECOND FFRT	AMPLICHECK®	C7927, C7962
R7851B1018	0.8 SECOND FFRT	AMPLICHECK®	C7927, C7962
R7851C1008	3.0 SECOND FFRT	DYNAMIC SELF-CHECK	C7961E, F
R7851A1001	3.0 SECOND FFRT	NONE	C7915
R7852B1009	3.0 SECOND FFRT	AMPLICHECK®	C7915
R7861A1026	3.0 SECOND FFRT	DYNAMIC SELF-CHECK	C7061A, F, M
R7861A1034	0.8 SECOND FFRT	DYNAMIC SELF-CHECK	C7061A, F, M
R7886A1001	3.0 SECOND FFRT	DYNAMIC SELF-CHECK	C7076A, D

* FLAME ROD LEADWIRE RUNS GREATER THAN 50FT (1524 CM) OR PARALLEL C7012A,C.

5.) SELECT OPTIONAL COMPONENTS

KEYBOARD DISPLAY MODULE

O.S. NO.	DESCRIPTION
S7800A1001	ENGLISH LANGUAGE
S7800A1035	FRENCH LANGUAGE
S7800A1043	GERMAN LANGUAGE
S7800A1050	ITALIAN LANGUAGE
S7800A1068	SPANISH LANGUAGE
S7800A1118	KATAKANA (JAPANESE) LANGUAGE
S7800A1126	PORTUGUESE LANGUAGE

COMMUNICATIONS

O.S. NO.	DESCRIPTION
S7810A1009	DATA CONTROLBUS® MODULE (IF NO KEYBOARD DISPLAY IS USED)
S7810M1003	MODBUS MODULE

MISCELLANEOUS

O.S. NO.	DESCRIPTION
S7820A1007	REMOTE RESET MODULE
S7830A1005	EXPANDED ANNUNCIATIOR (120 VAC, 50/60 HZ)
203541	DATA CONTROLBUS CONNECTOR, 5-WIRE
203765	REMOTE DISPLAY MOUNTING BRACKET
221729	DUST COVER, RELAY MODULE
50023821-001	KEYBOARD DISPLAY MODULE COVER, NEMA 4
204718B	KEYBOARD DISPLAY MODULE COVER, CLEAR
50023821-002	KEYBOARD DISPLAY MODULE COVER, NEMA 4, CLEAR WITH RESET BUTTON
205321B	FLUSH DISPLAY MOUNTING KIT
221818A	EXTENSION CABLE, DISPLAY 5FT (1524MM)
221818C	EXTENSION CABLE, DISPLAY 10FT (3048MM)

M13908B

Product Selection Matrix

PRODUCT SELECTION MATRIX FOR RM7897 ON/OFF WITH PRE- AND PROGRAMMABLE POST-PURGE PRIMARY RELAY MODULES:

1.) SELECT A RELAY MODULE

120 VAC 50/60 HZ	DESCRIPTION
RM7897A1002	INTERMITTENT/INTERRUPTED PILOT AND PROOF OF CLOSURE
RM7897C1000	INTERRUPTED PILOT WITH DELAYED MV2 AND PROOF OF CLOSURE
RM7897C1018	INTERRUPTED PILOT WITH DELAYED MV2 AND PROOF OF CLOSURE 5 SEC MFEP

2.) SELECT A SUBBASE

O.S. NO.	DESCRIPTION
Q7800A1005	PANEL MOUNT
Q7800B1003	BURNER/WALL MOUNT
Q7800B1011	BURNER/WALL MOUNT WITH 3 KNOCKOUTS

3.) SELECT A PURGE CARD

O.S. NO.	DESCRIPTION	O.S. NO.	DESCRIPTION
ST7800A1005	TIMING: 2 SECOND	ST7800A1070	TIMING: 2.5 MINUTE
ST7800A1013	TIMING: 7 SECOND	ST7800A1088	TIMING: 4 MINUTE
ST7800A1021	TIMING: 10 SECOND	ST7800A1096	TIMING: 6 MINUTE
ST7800A1039	TIMING: 30 SECOND	ST7800A1104	TIMING: 9 MINUTE
ST7800A1047	TIMING: 40 SECOND	ST7800A1112	TIMING: 12 MINUTE
ST7800A1054	TIMING: 60 SECOND	ST7800A1120	TIMING: 15 MINUTE
ST7800A1062	TIMING: 90 SECOND	ST7800A1138	TIMING: 22 MINUTE
		ST7800A1146	TIMING: 30 MINUTE

4.) SELECT A FLAME AMPLIFIER

O.S. NO.	DESCRIPTION	CHECKING	USE WITH
R7847A1025	0.8 SECOND FFRT	NONE	FLAME ROD
R7847A1033	3.0 SECOND FFRT	NONE	FLAME ROD
R7847A1074	0.8 SECOND FFRT	NONE	FLAME ROD*
R7847A1082	3.0 SECOND FFRT	NONE	FLAME ROD*, C7012A, C
R7847B1023	0.8 SECOND FFRT	AMPLICHECK®	FLAME ROD
R7847B1031	3.0 SECOND FFRT	AMPLICHECK®	FLAME ROD
R7847B1064	0.8 SECOND FFRT	AMPLICHECK®	FLAME ROD*
R7847B1072	3.0 SECOND FFRT	AMPLICHECK®	FLAME ROD*, C7012A, C
R7847C1005	3.0 SECOND FFRT	DYNAMIC SELF-CHECK	C7012E, F
R7849A1015	0.8 SECOND FFRT	NONE	C7027, C7035
R7849A1023	3.0 SECOND FFRT	NONE	C7027, C7035
R7849B1013	0.8 SECOND FFRT	AMPLICHECK®	C7027, C7035
R7849B1021	3.0 SECOND FFRT	AMPLICHECK®	C7027, C7035
R7851B1000	3.0 SECOND FFRT	AMPLICHECK®	C7927, C7962
R7851B1018	0.8 SECOND FFRT	AMPLICHECK®	C7927, C7962
R7851C1008	3.0 SECOND FFRT	DYNAMIC SELF-CHECK	C7961E,F
R7852A1001	3.0 SECOND FFRT	NONE	C7915
R7852B1009	3.0 SECOND FFRT	AMPLICHECK®	C7915
R7861A1026	3.0 SECOND FFRT	DYNAMIC SELF-CHECK	C7061A, F, M
R7861A1034	0.8 SECOND FFRT	DYNAMIC SELF-CHECK	C7061A, F, M
R7886A1001	3.0 SECOND FFRT	DYNAMIC SELF-CHECK	C7076A, D

* FLAME ROD LEADWIRE RUNS GREATER THAN 50FT (1524 CM) OR PARALLEL C7012A,C.

5.) SELECT OPTIONAL COMPONENTS

KEYBOARD DISPLAY MODULE

O.S. NO.	DESCRIPTION
S7800A1001	ENGLISH LANGUAGE
S7800A1035	FRENCH LANGUAGE
S7800A1043	GERMAN LANGUAGE
S7800A1050	ITALIAN LANGUAGE
S7800A1068	SPANISH LANGUAGE
S7800A1118	KATAKANA (JAPANESE) LANGUAGE
S7800A1126	PORTUGUESE LANGUAGE
S7800A1142	ENGLISH (REQUIRED TO SET POST PURGE TIME)
S7800A1167	SPANISH (REQUIRED TO SET POST PURGE TIME)

COMMUNICATIONS

O.S. NO.	DESCRIPTION
S7810A1009	DATA CONTROLBUS® MODULE (IF NO KEYBOARD DISPLAY IS USED)
S7810M1003	MODBUS MODULE

MISCELLANEOUS

O.S. NO.	DESCRIPTION
S7820A1007	REMOTE RESET MODULE
S7830A1005	EXPANDED ANNUNCIATIOR (120 VAC, 50/60 HZ)
203541	DATA CONTROLBUS CONNECTOR, 5-WIRE
203765	REMOTE DISPLAY MOUNTING BRACKET
221729	DUST COVER, RELAY MODULE
50023821-001	KEYBOARD DISPLAY MODULE COVER, NEMA 4
204718B	KEYBOARD DISPLAY MODULE COVER, CLEAR
50023821-002	KEYBOARD DISPLAY MODULE COVER, NEMA 4, CLEAR WITH RESET BUTTON
205321B	FLUSH DISPLAY MOUNTING KIT
221818A	EXTENSION CABLE, DISPLAY 5FT (1524MM)
221818C	EXTENSION CABLE, DISPLAY 10FT (3048MM)

M15526H

PRODUCT SELECTION MATRIX FOR RM7898 ON/OFF WITH PRE- AND PROGRAMMABLE POST-PURGE PRIMARY RELAY MODULES FOR VALVE PROVING APPLICATIONS:

1.) SELECT A RELAY MODULE

120 VAC 50/60 HZ	DESCRIPTION
RM7898A1000	INTERMITTENT/INTERRUPTED PILOT AND PROOF OF CLOSURE
RM7898A1018	INTERMITTENT/INTERRUPTED PILOT WITH EARLY SPARK TERMINATION AND PROOF OF CLOSURE

2.) SELECT A SUBBASE

O.S. NO.	DESCRIPTION
Q7800A1005	PANEL MOUNT
Q7800B1003	BURNER/WALL MOUNT
Q7800B1011	BURNER/WALL MOUNT WITH 3 KNOCKOUTS

3.) SELECT A PURGE CARD

O.S. NO.	DESCRIPTION	O.S. NO.	DESCRIPTION
ST7800A1005	TIMING: 2 SECOND	ST7800A1070	TIMING: 2.5 MINUTE
ST7800A1013	TIMING: 7 SECOND	ST7800A1088	TIMING: 4 MINUTE
ST7800A1021	TIMING: 10 SECOND	ST7800A1096	TIMING: 6 MINUTE
ST7800A1039	TIMING: 30 SECOND	ST7800A1104	TIMING: 9 MINUTE
ST7800A1047	TIMING: 40 SECOND	ST7800A1112	TIMING: 12 MINUTE
ST7800A1054	TIMING: 60 SECOND	ST7800A1120	TIMING: 15 MINUTE
ST7800A1062	TIMING: 90 SECOND	ST7800A1138	TIMING: 22 MINUTE
		ST7800A1146	TIMING: 30 MINUTE

4.) SELECT A FLAME AMPLIFIER

O.S. NO.	DESCRIPTION	CHECKING	USE WITH
R7847A1025	0.8 SECOND FFRT	NONE	FLAME ROD
R7847A1033	3.0 SECOND FFRT	NONE	FLAME ROD
R7847A1074	0.8 SECOND FFRT	NONE	FLAME ROD*
R7847A1082	3.0 SECOND FFRT	NONE	FLAME ROD*, C7012A, C
R7847B1023	0.8 SECOND FFRT	AMPLICHECK®	FLAME ROD
R7847B1031	3.0 SECOND FFRT	AMPLICHECK®	FLAME ROD
R7847B1064	0.8 SECOND FFRT	AMPLICHECK®	FLAME ROD*
R7847B1072	3.0 SECOND FFRT	AMPLICHECK®	FLAME ROD*, C7012A, C
R7847C1005	3.0 SECOND FFRT	DYNAMIC SELF-CHECK	C7012E, F
R7849A1015	0.8 SECOND FFRT	NONE	C7027, C7035
R7849A1023	3.0 SECOND FFRT	NONE	C7027, C7035
R7849B1013	0.8 SECOND FFRT	AMPLICHECK®	C7027, C7035
R7849B1021	3.0 SECOND FFRT	AMPLICHECK®	C7027, C7035
R7851B1000	3.0 SECOND FFRT	AMPLICHECK®	C7927, C7962
R7851B1018	0.8 SECOND FFRT	AMPLICHECK®	C7927, C7962
R7851C1008	3.0 SECOND FFRT	DYNAMIC SELF-CHECK	C7961E,F
R7852A1001	3.0 SECOND FFRT	NONE	C7915
R7852B1009	3.0 SECOND FFRT	AMPLICHECK®	C7915
R7861A1026	3.0 SECOND FFRT	DYNAMIC SELF-CHECK	C7061A, F, M
R7861A1034	0.8 SECOND FFRT	DYNAMIC SELF-CHECK	C7061A, F, M
R7886A1001	3.0 SECOND FFRT	DYNAMIC SELF-CHECK	C7076A, D

* FLAME ROD LEADWIRE RUNS GREATER THAN 50FT (1524 CM) OR PARALLEL C7012A,C.

5.) SELECT OPTIONAL COMPONENTS

KEYBOARD DISPLAY MODULE

O.S. NO.	DESCRIPTION
S7800A1001	ENGLISH LANGUAGE
S7800A1035	FRENCH LANGUAGE
S7800A1043	GERMAN LANGUAGE
S7800A1050	ITALIAN LANGUAGE
S7800A1068	SPANISH LANGUAGE
S7800A1118	KATAKANA (JAPANESE) LANGUAGE
S7800A1126	PORTUGUESE LANGUAGE
S7800A1142	ENGLISH (REQUIRED TO PROGRAM POST PURGE AND VP TIMINGS)
S7800A1167	SPANISH (REQUIRED TO PROGRAM POST PURGE AND VP TIMINGS)

COMMUNICATIONS

O.S. NO.	DESCRIPTION
S7810A1009	DATA CONTROLBUS® MODULE (IF NO KEYBOARD DISPLAY IS USED)
S7810M1003	MODBUS MODULE

MISCELLANEOUS

O.S. NO.	DESCRIPTION
S7820A1007	REMOTE RESET MODULE
S7830A1005	EXPANDED ANNUNCIATIOR (120 VAC, 50/60 HZ)
203541	DATA CONTROLBUS CONNECTOR, 5-WIRE
203765	REMOTE DISPLAY MOUNTING BRACKET
221729	DUST COVER, RELAY MODULE
50023821-001	KEYBOARD DISPLAY MODULE COVER, NEMA 4
204718B	KEYBOARD DISPLAY MODULE COVER, CLEAR
50023821-002	KEYBOARD DISPLAY MODULE COVER, NEMA 4, CLEAR WITH RESET BUTTON
205321B	FLUSH DISPLAY MOUNTING KIT
221818A	EXTENSION CABLE, DISPLAY 5FT (1524MM)
221818C	EXTENSION CABLE, DISPLAY 10FT (3048MM)

M23254C

Product Selection Matrix

PRODUCT SELECTION MATRIX FOR RM7838A MANUAL START WITH PURGE INDUSTRIAL PRIMARY RELAY MODULE:

1.) SELECT A RELAY MODULE

120 VAC 50/60 HZ	DESCRIPTION
RM7838A1014	INTERMITTENT PILOT, S7800A1001 KEYBOARD DISPLAY STANDARD

2.) SELECT A SUBBASE

O.S. NO.	DESCRIPTION
Q7800A1005	PANEL MOUNT
Q7800B1003	BURNER/WALL MOUNT
Q7800B1011	BURNER/WALL MOUNT WITH 3 KNOCKOUTS

3.) SELECT A PURGE CARD

O.S. NO.	DESCRIPTION	O.S. NO.	DESCRIPTION
ST7800A1005	TIMING: 2 SECOND	ST7800A1070	TIMING: 2.5 MINUTE
ST7800A1013	TIMING: 7 SECOND	ST7800A1088	TIMING: 4 MINUTE
ST7800A1021	TIMING: 10 SECOND	ST7800A1096	TIMING: 6 MINUTE
ST7800A1039	TIMING: 30 SECOND	ST7800A1104	TIMING: 9 MINUTE
ST7800A1047	TIMING: 40 SECOND	ST7800A1112	TIMING: 12 MINUTE
ST7800A1054	TIMING: 60 SECOND	ST7800A1120	TIMING: 15 MINUTE
ST7800A1062	TIMING: 90 SECOND	ST7800A1138	TIMING: 22 MINUTE
		ST7800A1146	TIMING: 30 MINUTE

4.) SELECT A FLAME AMPLIFIER

O.S. NO.	DESCRIPTION	CHECKING	USE WITH
R7847A1025	0.8 SECOND FFRT	NONE	FLAME ROD
R7847A1033	3.0 SECOND FFRT	NONE	FLAME ROD
R7847A1074	0.8 SECOND FFRT	NONE	FLAME ROD*
R7847A1082	3.0 SECOND FFRT	NONE	FLAME ROD*, C7012A, C
R7847B1023	0.8 SECOND FFRT	AMPLICHECK®	FLAME ROD
R7847B1031	3.0 SECOND FFRT	AMPLICHECK®	FLAME ROD
R7847B1064	0.8 SECOND FFRT	AMPLICHECK®	FLAME ROD*
R7847B1072	3.0 SECOND FFRT	AMPLICHECK®	FLAME ROD*, C7012A, C
R7847C1005	3.0 SECOND FFRT	DYNAMIC SELF-CHECK	C7012E, F
R7849A1015	0.8 SECOND FFRT	NONE	C7027, C7035
R7849A1023	3.0 SECOND FFRT	NONE	C7027, C7035
R7849B1013	0.8 SECOND FFRT	AMPLICHECK®	C7027, C7035
R7849B1021	3.0 SECOND FFRT	AMPLICHECK®	C7027, C7035
R7851B1000	3.0 SECOND FFRT	AMPLICHECK®	C7927, C7962
R7851B1018	0.8 SECOND FFRT	AMPLICHECK®	C7927, C7962
R7851C1008	3.0 SECOND FFRT	DYNAMIC SELF-CHECK	C7961E, F
R7852A1001	3.0 SECOND FFRT	NONE	C7915
R7852B1009	3.0 SECOND FFRT	AMPLICHECK®	C7915
R7861A1026	3.0 SECOND FFRT	DYNAMIC SELF-CHECK	C7061A, F, M
R7861A1034	0.8 SECOND FFRT	DYNAMIC SELF-CHECK	C7061A, F, M
R7886A1001	3.0 SECOND FFRT	DYNAMIC SELF-CHECK	C7076A, D

* FLAME ROD LEADWIRE RUNS GREATER THAN 50FT (1524 CM) OR PARALLEL C7012A,C.

5.) SELECT OPTIONAL COMPONENTS

KEYBOARD DISPLAY MODULE

O.S. NO.	DESCRIPTION
S7800A1001	ENGLISH LANGUAGE
S7800A1035	FRENCH LANGUAGE
S7800A1043	GERMAN LANGUAGE
S7800A1050	ITALIAN LANGUAGE
S7800A1068	SPANISH LANGUAGE
S7800A1118	KATAKANA (JAPANESE) LANGUAGE
S7800A1126	PORTUGUESE LANGUAGE

COMMUNICATIONS

O.S. NO.	DESCRIPTION
S7810A1009	DATA CONTROLBUS® MODULE (IF NO KEYBOARD DISPLAY IS USED)
S7810M1003	MODBUS MODULE

MISCELLANEOUS

O.S. NO.	DESCRIPTION
S7820A1007	REMOTE RESET MODULE
203541	DATA CONTROLBUS CONNECTOR, 5-WIRE
203765	REMOTE DISPLAY MOUNTING BRACKET
221729	DUST COVER, RELAY MODULE
50023821-001	KEYBOARD DISPLAY MODULE COVER, NEMA 4
204718B	KEYBOARD DISPLAY MODULE COVER, CLEAR
50023821-002	KEYBOARD DISPLAY MODULE COVER, NEMA 4, CLEAR WITH RESET BUTTON
205321B	FLUSH DISPLAY MOUNTING KIT
221818A	EXTENSION CABLE, DISPLAY 5FT (1524MM)
221818C	EXTENSION CABLE, DISPLAY 10FT (3048MM)

M15527F

PRODUCT SELECTION MATRIX FOR RM7838B MANUAL START INDUSTRIAL PROGRAMMER RELAY MODULE:

1.) SELECT A RELAY MODULE

120 VAC 50/60 HZ	DESCRIPTION
	SEMI-AUTOMATIC PROGRAMMER WITH:
RM7838B1013*	S7800A1001 KEYBOARD DISPLAY STANDARD
RM7838B1021*	S7800A1142 KEYBOARD DISPLAY STANDARD - HAS VALVE PROVING FEATURE

* ALARM SOUNDS UNTIL FLAME SENSED

2.) SELECT A SUBBASE

O.S. NO.	DESCRIPTION
Q7800A1005	PANEL MOUNT
Q7800B1003	BURNER/WALL MOUNT
Q7800B1011	BURNER/WALL MOUNT WITH 3 KNOCKOUTS

3.) SELECT A PURGE CARD

O.S. NO.	DESCRIPTION	O.S. NO.	DESCRIPTION
ST7800A1005	TIMING: 2 SECOND	ST7800A1070	TIMING: 2.5 MINUTE
ST7800A1013	TIMING: 7 SECOND	ST7800A1088	TIMING: 4 MINUTE
ST7800A1021	TIMING: 10 SECOND	ST7800A1096	TIMING: 6 MINUTE
ST7800A1039	TIMING: 30 SECOND	ST7800A1104	TIMING: 9 MINUTE
ST7800A1047	TIMING: 40 SECOND	ST7800A1112	TIMING: 12 MINUTE
ST7800A1054	TIMING: 60 SECOND	ST7800A1120	TIMING: 15 MINUTE
ST7800A1062	TIMING: 90 SECOND	ST7800A1138	TIMING: 22 MINUTE
		ST7800A1146	TIMING: 30 MINUTE

4.) SELECT A FLAME AMPLIFIER

O.S. NO.	DESCRIPTION	CHECKING	USE WITH
R7847A1025	0.8 SECOND FFRT	NONE	FLAME ROD
R7847A1033	3.0 SECOND FFRT	NONE	FLAME ROD
R7847A1074	0.8 SECOND FFRT	NONE	FLAME ROD*
R7847A1082	3.0 SECOND FFRT	NONE	FLAME ROD*, C7012A, C
R7847B1023	0.8 SECOND FFRT	AMPLICHECK®	FLAME ROD
R7847B1031	3.0 SECOND FFRT	AMPLICHECK®	FLAME ROD
R7847B1064	0.8 SECOND FFRT	AMPLICHECK®	FLAME ROD*
R7847B1072	3.0 SECOND FFRT	AMPLICHECK®	FLAME ROD*, C7012A, C
R7847C1005	3.0 SECOND FFRT	DYNAMIC SELF-CHECK	C7012E, F
R7849A1015	0.8 SECOND FFRT	NONE	C7027, C7035
R7849A1023	3.0 SECOND FFRT	NONE	C7027, C7035
R7849B1013	0.8 SECOND FFRT	AMPLICHECK®	C7027, C7035
R7849B1021	3.0 SECOND FFRT	AMPLICHECK®	C7027, C7035
R7851B1000	3.0 SECOND FFRT	AMPLICHECK®	C7927, C7962
R7851B1018	0.8 SECOND FFRT	AMPLICHECK®	C7927, C7962
R7851C1008	3.0 SECOND FFRT	DYNAMIC SELF-CHECK	C7961E,F
R7852A1001	3.0 SECOND FFRT	NONE	C7915
R7852B1009	3.0 SECOND FFRT	AMPLICHECK®	C7915
R7861A1026	3.0 SECOND FFRT	DYNAMIC SELF-CHECK	C7061A, F, M
R7861A1034	0.8 SECOND FFRT	DYNAMIC SELF-CHECK	C7061A, F, M
R7886A1001	3.0 SECOND FFRT	DYNAMIC SELF-CHECK	C7076A, D

* FLAME ROD LEADWIRE RUNS GREATER THAN 50FT (1524 CM) OR PARALLEL C7012A,C.

5.) SELECT OPTIONAL COMPONENTS

KEYBOARD DISPLAY MODULE

O.S. NO.	DESCRIPTION
S7800A1001	ENGLISH LANGUAGE
S7800A1035	FRENCH LANGUAGE
S7800A1043	GERMAN LANGUAGE
S7800A1050	ITALIAN LANGUAGE
S7800A1068	SPANISH LANGUAGE
S7800A1118	KATAKANA (JAPANESE) LANGUAGE
S7800A1126	PORTUGUESE LANGUAGE

COMMUNICATIONS

O.S. NO.	DESCRIPTION
S7810A1009	DATA CONTROLBUS® MODULE (IF NO KEYBOARD DISPLAY IS USED)
S7810M1003	MODBUS MODULE

MISCELLANEOUS

O.S. NO.	DESCRIPTION
S7820A1007	REMOTE RESET MODULE
S7830A1005	EXPANDED ANNUNCIATIOR (120 VAC, 50/60 HZ)
203541	DATA CONTROLBUS CONNECTOR, 5-WIRE
203765	REMOTE DISPLAY MOUNTING BRACKET
221729	DUST COVER, RELAY MODULE
50023821-001	KEYBOARD DISPLAY MODULE COVER, NEMA 4
204718B	KEYBOARD DISPLAY MODULE COVER, CLEAR
50023821-002	KEYBOARD DISPLAY MODULE COVER, NEMA 4, CLEAR WITH RESET BUTTON
205321B	FLUSH DISPLAY MOUNTING KIT
221818A	EXTENSION CABLE, DISPLAY 5FT (1524MM)
221818C	EXTENSION CABLE, DISPLAY 10FT (3048MM)

M15528F

Product Selection Matrix

PRODUCT SELECTION MATRIX FOR RM7838C MANUAL START INDUSTRIAL PROGRAMMER RELAY MODULE:

1.) SELECT A RELAY MODULE

120 VAC 50/60 HZ	DESCRIPTION
	SEMI-AUTOMATIC PROGRAMMER WITH:
RM7838C1004*	S7800A1001 KEYBOARD DISPLAY STANDARD
RM7838C1012*	S7800A1142 KEYBOARD DISPLAY STANDARD - DEVICE HAS VALVE PROVING FEATURE
RM7838C1020*+	S7800A1001 KEYBOARD DISPLAY STANDARD

* ALARM OUTPUT - LOCKOUT ONLY
+NORTH AMERICAN AND CE APPROVED

2.) SELECT A SUBBASE

O.S. NO.	DESCRIPTION
Q7800A1005	PANEL MOUNT
Q7800B1003	BURNER/WALL MOUNT
Q7800B1011	BURNER/WALL MOUNT WITH 3 KNOCKOUTS

3.) SELECT A PURGE CARD

O.S. NO.	DESCRIPTION	O.S. NO.	DESCRIPTION
ST7800C1003	TIMING: 7 SECOND	ST7800C1086	TIMING: 16 MINUTE
ST7800C1011	TIMING: 20 SECOND	ST7800C1102	TIMING: 20 MINUTE
ST7800C1029	TIMING: 4 MINUTE	ST7800C1128	TIMING: 24 MINUTE
ST7800C1037	TIMING: 6 MINUTE	ST7800C1136	TIMING: 30 MINUTE
ST7800C1045	TIMING: 8 MINUTE	ST7800C1144	TIMING: 45 MINUTE
ST7800C1052	TIMING: 10 MINUTE		

4.) SELECT A FLAME AMPLIFIER

O.S. NO.	DESCRIPTION	CHECKING	USE WITH
R7847A1025	0.8 SECOND FFRT	NONE	FLAME ROD
R7847A1033	3.0 SECOND FFRT	NONE	FLAME ROD
R7847A1074	0.8 SECOND FFRT	NONE	FLAME ROD*
R7847A1082	3.0 SECOND FFRT	NONE	FLAME ROD*, C7012A, C
R7847B1023	0.8 SECOND FFRT	AMPLICHECK®	FLAME ROD
R7847B1031	3.0 SECOND FFRT	AMPLICHECK®	FLAME ROD
R7847B1064	0.8 SECOND FFRT	AMPLICHECK®	FLAME ROD*
R7847B1072	3.0 SECOND FFRT	AMPLICHECK®	FLAME ROD*, C7012A, C
R7847C1005	3.0 SECOND FFRT	DYNAMIC SELF-CHECK	C7012E,E
R7849A1015	0.8 SECOND FFRT	NONE	C7027, C7035
R7849A1023	3.0 SECOND FFRT	NONE	C7027, C7035
R7849B1013	0.8 SECOND FFRT	AMPLICHECK®	C7027, C7035
R7849B1021	3.0 SECOND FFRT	AMPLICHECK®	C7027, C7035
R7851B1000	3.0 SECOND FFRT	AMPLICHECK®	C7927, C7962
R7851B1018	0.8 SECOND FFRT	AMPLICHECK®	C7927, C7962
R7851C1008	3.0 SECOND FFRT	DYNAMIC SELF-CHECK	C7961E,F
R7852A1001	3.0 SECOND FFRT	NONE	C7915
R7852B1009	3.0 SECOND FFRT	AMPLICHECK®	C7915
R7861A1026	3.0 SECOND FFRT	DYNAMIC SELF-CHECK	C7061A, F, M
R7861A1034	0.8 SECOND FFRT	DYNAMIC SELF-CHECK	C7061A, F, M
R7886A1001	3.0 SECOND FFRT	DYNAMIC SELF-CHECK	C7076A, D

* FLAME ROD LEADWIRE RUNS GREATER THAN 50FT (1524 CM) OR PARALLEL C7012A,C.

5.) SELECT OPTIONAL COMPONENTS

KEYBOARD DISPLAY MODULE

O.S. NO.	DESCRIPTION
S7800A1001	ENGLISH LANGUAGE
S7800A1035	FRENCH LANGUAGE
S7800A1043	GERMAN LANGUAGE
S7800A1050	ITALIAN LANGUAGE
S7800A1068	SPANISH LANGUAGE
S7800A1118	KATAKANA (JAPANESE) LANGUAGE
S7800A1126	PORTUGUESE LANGUAGE
S7800A1142	ENGLISH (REQUIRED TO PROGRAM POST PURGE AND VP TIMINGS)
S7800A1167	SPANISH (REQUIRED TO PROGRAM POST PURGE AND VP TIMINGS)

COMMUNICATIONS

O.S. NO.	DESCRIPTION
S7810A1009	DATA CONTROLBUS® MODULE (IF NO KEYBOARD DISPLAY IS USED)
S7810M1003	MODBUS MODULE

MISCELLANEOUS

O.S. NO.	DESCRIPTION
S7820A1007	REMOTE RESET MODULE
S7830A1005	EXPANDED ANNUNCIATIOR (120 VAC, 50/60 HZ)
203541	DATA CONTROLBUS CONNECTOR, 5-WIRE
203765	REMOTE DISPLAY MOUNTING BRACKET
221729	DUST COVER, RELAY MODULE
50023821-001	KEYBOARD DISPLAY MODULE COVER, NEMA 4
204718B	KEYBOARD DISPLAY MODULE COVER, CLEAR
50023821-002	KEYBOARD DISPLAY MODULE COVER, NEMA 4, CLEAR WITH RESET BUTTON
205321B	FLUSH DISPLAY MOUNTING KIT
221818A	EXTENSION CABLE, DISPLAY 5FT (1524MM)
221818C	EXTENSION CABLE, DISPLAY 10FT (3048MM)

M18830F

PRODUCT SELECTION MATRIX FOR UL/CSA RM78XXG,M PROGRAMMER RELAY MODULE:

1.) SELECT A RELAY MODULE

120VAC 50/60 HZ	DESCRIPTION
RM7800G1018	MODULATING BURNER CONTROL, S7800A1001 KEYBOARD DISPLAY MODULE STANDARD
RM7840G1014	MODULATING BURNER CONTROL, WITHOUT KEYBOARD DISPLAY MODULE
RM7840G1022	MODULATING BURNER CONTROL, WITHOUT KEYBOARD DISPLAY MODULE - FOR VALVE PROVING
RM7800M1011	ON-OFF BURNER CONTROL, S7800A1001 KEYBOARD DISPLAY MODULE STANDARD
RM7840M1017	ON-OFF BURNER CONTROL, WITHOUT KEYBOARD DISPLAY MODULE

2.) SELECT A SUBBASE

O.S. NO.	DESCRIPTION
Q7800A1005	PANEL MOUNT
Q7800B1003	BURNER/WALL MOUNT
Q7800B1011	BURNER/WALL MOUNT WITH 3 KNOCKOUTS

3.) SELECT A PURGE CARD

O.S. NO.	DESCRIPTION	O.S. NO.	DESCRIPTION
ST7800A1005	TIMING: 2 SECOND	ST7800A1070	TIMING: 2.5 MINUTE
ST7800A1013	TIMING: 7 SECOND	ST7800A1088	TIMING: 4 MINUTE
ST7800A1021	TIMING: 10 SECOND	ST7800A1096	TIMING: 6 MINUTE
ST7800A1039	TIMING: 30 SECOND	ST7800A1104	TIMING: 9 MINUTE
ST7800A1047	TIMING: 40 SECOND	ST7800A1112	TIMING: 12 MINUTE
ST7800A1054	TIMING: 60 SECOND	ST7800A1120	TIMING: 15 MINUTE
ST7800A1062	TIMING: 90 SECOND	ST7800A1138	TIMING: 22 MINUTE
		ST7800A1146	TIMING: 30 MINUTE

4.) SELECT A FLAME AMPLIFIER

O.S. NO.	DESCRIPTION	CHECKING	USE WITH
R7847A1025	0.8 SECOND FFRT	NONE	FLAME ROD
R7847A1033	3.0 SECOND FFRT	NONE	FLAME ROD
R7847A1074	0.8 SECOND FFRT	NONE	FLAME ROD*
R7847A1082	3.0 SECOND FFRT	NONE	FLAME ROD*, C7012A, C
R7847B1023	0.8 SECOND FFRT	AMPLICHECK®	FLAME ROD
R7847B1031	3.0 SECOND FFRT	AMPLICHECK®	FLAME ROD
R7847B1064	0.8 SECOND FFRT	AMPLICHECK®	FLAME ROD*
R7847B1072	3.0 SECOND FFRT	AMPLICHECK®	FLAME ROD*, C7012A, C
R7847C1005	3.0 SECOND FFRT	DYNAMIC SELF-CHECK	C7012E, F
R7849A1015	0.8 SECOND FFRT	NONE	C7027, C7035
R7849A1023	3.0 SECOND FFRT	NONE	C7027, C7035
R7849B1013	0.8 SECOND FFRT	AMPLICHECK®	C7027, C7035
R7849B1021	3.0 SECOND FFRT	AMPLICHECK®	C7027, C7035
R7851B1000	3.0 SECOND FFRT	AMPLICHECK®	C7927, C7962
R7851B1018	0.8 SECOND FFRT	AMPLICHECK®	C7927, C7962
R7851C1008	3.0 SECOND FFRT	DYNAMIC SELF-CHECK	C7961E, F
R7852A1001	3.0 SECOND FFRT	NONE	C7915
R7852B1009	3.0 SECOND FFRT	AMPLICHECK®	C7915
R7861A1026	3.0 SECOND FFRT	DYNAMIC SELF-CHECK	C7061A, F, M
R7861A1034	0.8 SECOND FFRT	DYNAMIC SELF-CHECK	C7061A, F, M
R7886A1001	3.0 SECOND FFRT	DYNAMIC SELF-CHECK	C7076A, D

* FLAME ROD LEADWIRE RUNS GREATER THAN 50FT (1524 CM) OR PARALLEL C7012A,C.

5.) SELECT OPTIONAL COMPONENTS

KEYBOARD DISPLAY MODULE

O.S. NO.	DESCRIPTION
S7800A1001	ENGLISH LANGUAGE
S7800A1035	FRENCH LANGUAGE
S7800A1043	GERMAN LANGUAGE
S7800A1050	ITALIAN LANGUAGE
S7800A1068	SPANISH LANGUAGE
S7800A1118	KATAKANA (JAPANESE) LANGUAGE
S7800A1126	PORTUGEUESE LANGUAGE
S7800A1142	ENGLISH (REQUIRED TO PROGRAM VALVE PROVING FEATURE)
S7800A1167	SPANISH (REQUIRED TO PROGRAM VALVE PROVING FEATURE)

COMMUNICATIONS

O.S. NO.	DESCRIPTION
S7810A1009	DATA CONTROLBUS® MODULE (IF NO KEYBOARD DISPLAY IS USED)
S7810M1003	MODBUS MODULE

MISCELLANEOUS

O.S. NO.	DESCRIPTION
S7820A1007	REMOTE RESET MODULE
S7830A1005	EXPANDED ANNUNCIATIOR (120 VAC, 50/60 HZ)
203541	DATA CONTROLBUS CONNECTOR, 5-WIRE
203765	REMOTE DISPLAY MOUNTING BRACKET
221729	DUST COVER, RELAY MODULE
50023821-001	KEYBOARD DISPLAY MODULE COVER, NEMA 4
204718B	KEYBOARD DISPLAY MODULE COVER, CLEAR
50023821-002	KEYBOARD DISPLAY MODULE COVER, NEMA 4, CLEAR WITH RESET BUTTON
205321B	FLUSH DISPLAY MOUNTING KIT
221818A	EXTENSION CABLE, DISPLAY 5FT (1524MM)
221818C	EXTENSION CABLE, DISPLAY 10FT (3048MM)

M15529F

Product Selection Matrix

PRODUCT SELECTION MATRIX FOR FM/IRI RM78XXE, L PROGRAMMER RELAY MODULE:

1.) SELECT A RELAY MODULE

120VAC 50/60 HZ	DESCRIPTION
RM7845A1001	WITHOUT KEYBOARD DISPLAY (LESS IGNITION AND 15 SECOND MFEP PILOT TERMINALS)

2.) SELECT A SUBBASE

O.S. NO.	DESCRIPTION
Q7800A1005	PANEL MOUNT
Q7800B1003	BURNER/WALL MOUNT
Q7800B1011	BURNER/WALL MOUNT WITH 3 KNOCKOUTS

3.) SELECT A PURGE CARD

O.S. NO.	DESCRIPTION	O.S. NO.	DESCRIPTION
ST7800A1005	TIMING: 2 SECOND	ST7800A1070	TIMING: 2.5 MINUTE
ST7800A1013	TIMING: 7 SECOND	ST7800A1088	TIMING: 4 MINUTE
ST7800A1021	TIMING: 10 SECOND	ST7800A1096	TIMING: 6 MINUTE
ST7800A1039	TIMING: 30 SECOND	ST7800A1104	TIMING: 9 MINUTE
ST7800A1047	TIMING: 40 SECOND	ST7800A1112	TIMING: 12 MINUTE
ST7800A1054	TIMING: 60 SECOND	ST7800A1120	TIMING: 15 MINUTE
ST7800A1062	TIMING: 90 SECOND	ST7800A1138	TIMING: 22 MINUTE
		ST7800A1146	TIMING: 30 MINUTE

4.) SELECT A FLAME AMPLIFIER

O.S. NO.	DESCRIPTION	CHECKING	USE WITH
R7847A1025	0.8 SECOND FFRT	NONE	FLAME ROD
R7847A1033	3.0 SECOND FFRT	NONE	FLAME ROD
R7847A1074	0.8 SECOND FFRT	NONE	FLAME ROD*
R7847A1082	3.0 SECOND FFRT	NONE	FLAME ROD*, C7012A, C
R7847B1023	0.8 SECOND FFRT	AMPLICHECK®	FLAME ROD
R7847B1031	3.0 SECOND FFRT	AMPLICHECK®	FLAME ROD
R7847B1064	0.8 SECOND FFRT	AMPLICHECK®	FLAME ROD*
R7847B1072	3.0 SECOND FFRT	AMPLICHECK®	FLAME ROD*, C7012A, C
R7847C1005	3.0 SECOND FFRT	DYNAMIC SELF-CHECK	C7012E, F
R7849A1015	0.8 SECOND FFRT	NONE	C7027, C7035
R7849A1023	3.0 SECOND FFRT	NONE	C7027, C7035
R7849B1013	0.8 SECOND FFRT	AMPLICHECK®	C7027, C7035
R7849B1021	3.0 SECOND FFRT	AMPLICHECK®	C7027, C7035
R7851B1000	3.0 SECOND FFRT	AMPLICHECK®	C7927, C7962
R7851B1018	0.8 SECOND FFRT	AMPLICHECK®	C7927, C7962
R7851C1008	3.0 SECOND FFRT	DYNAMIC SELF-CHECK	C7961E, F
R7852A1001	3.0 SECOND FFRT	NONE	C7915
R7852B1009	3.0 SECOND FFRT	AMPLICHECK®	C7915
R7861A1026	3.0 SECOND FFRT	DYNAMIC SELF-CHECK	C7061A, F, M
R7861A1034	0.8 SECOND FFRT	DYNAMIC SELF-CHECK	C7061A, F, M
R7886A1001	3.0 SECOND FFRT	DYNAMIC SELF-CHECK	C7076A, D

* FLAME ROD LEADWIRE RUNS GREATER THAN 50FT (1524 CM) OR PARALLEL C7012A,C.

5.) SELECT OPTIONAL COMPONENTS

KEYBOARD DISPLAY MODULE

O.S. NO.	DESCRIPTION
S7800A1001	ENGLISH LANGUAGE
S7800A1035	FRENCH LANGUAGE
S7800A1043	GERMAN LANGUAGE
S7800A1050	ITALIAN LANGUAGE
S7800A1068	SPANISH LANGUAGE
S7800A1118	KATAKANA (JAPANESE) LANGUAGE
S7800A1126	PORTUGUESE LANGUAGE
S7800A1142	ENGLISH (REQUIRED TO PROGRAM VALVE PROVING FEATURE)
S7800A1167	SPANISH (REQUIRED TO PROGRAM VALVE PROVING FEATURE)

COMMUNICATIONS

O.S. NO.	DESCRIPTION
S7810A1009	DATA CONTROLBUS® MODULE (IF NO KEYBOARD DISPLAY IS USED)
S7810M1003	MODBUS MODULE

MISCELLANEOUS

O.S. NO.	DESCRIPTION
S7820A1007	REMOTE RESET MODULE
S7830A1005	EXPANDED ANNUNCIATIOR (120 VAC, 50/60 HZ)
203541	DATA CONTROLBUS CONNECTOR, 5-WIRE
203765	REMOTE DISPLAY MOUNTING BRACKET
221729	DUST COVER, RELAY MODULE
50023821-001	KEYBOARD DISPLAY MODULE COVER, NEMA 4
204718B	KEYBOARD DISPLAY MODULE COVER, CLEAR
50023821-002	KEYBOARD DISPLAY MODULE COVER, NEMA 4, CLEAR WITH RESET BUTTON
205321B	FLUSH DISPLAY MOUNTING KIT
221818A	EXTENSION CABLE, DISPLAY 5FT (1524MM)
221818C	EXTENSION CABLE, DISPLAY 10FT (3048MM)

M34645

PRODUCT SELECTION MATRIX FOR FM/IRI RM78XXE, L PROGRAMMER RELAY MODULE:

1.) SELECT A RELAY MODULE

120VAC 50/60 HZ	DESCRIPTION
RM7800E1010	ENERGY SAVING PURGE, S7800A1001 KEYBOARD DISPLAY STANDARD
RM7840E1016	ENERGY SAVING PURGE WITHOUT KEYBOARD DISPLAY
RM7800L1012	S7800A1001 KEYBOARD DISPLAY STANDARD
RM7840L1018	WITHOUT KEYBOARD DISPLAY
RM7800L1053	INTERMITTENT PILOT, S7800A1001 KEYBOARD DISPLAY STANDARD
RM7840L1026	INTERMITTENT PILOT WITHOUT KEYBOARD DISPLAY
RM7800L1087	S7800A1142 KEYBOARD DISPLAY STANDARD - WITH VALVE PROVING FEATURE
RM7840L1075	WITHOUT KEYBOARD DISPLAY - WITH VALVE PROVING FEATURE

2.) SELECT A SUBBASE

O.S. NO.	DESCRIPTION
Q7800A1005	PANEL MOUNT
Q7800B1003	BURNER/WALL MOUNT
Q7800B1011	BURNER/WALL MOUNT WITH 3 KNOCKOUTS

3.) SELECT A PURGE CARD

O.S. NO.	DESCRIPTION	O.S. NO.	DESCRIPTION
ST7800A1005	TIMING: 2 SECOND	ST7800A1070	TIMING: 2.5 MINUTE
ST7800A1013	TIMING: 7 SECOND	ST7800A1088	TIMING: 4 MINUTE
ST7800A1021	TIMING: 10 SECOND	ST7800A1096	TIMING: 6 MINUTE
ST7800A1039	TIMING: 30 SECOND	ST7800A1104	TIMING: 9 MINUTE
ST7800A1047	TIMING: 40 SECOND	ST7800A1112	TIMING: 12 MINUTE
ST7800A1054	TIMING: 60 SECOND	ST7800A1120	TIMING: 15 MINUTE
ST7800A1062	TIMING: 90 SECOND	ST7800A1138	TIMING: 22 MINUTE
		ST7800A1146	TIMING: 30 MINUTE

4.) SELECT A FLAME AMPLIFIER

O.S. NO.	DESCRIPTION	CHECKING	USE WITH
R7847A1025	0.8 SECOND FFRT	NONE	FLAME ROD
R7847A1033	3.0 SECOND FFRT	NONE	FLAME ROD
R7847A1074	0.8 SECOND FFRT	NONE	FLAME ROD*
R7847A1082	3.0 SECOND FFRT	NONE	FLAME ROD*, C7012A, C
R7847B1023	0.8 SECOND FFRT	AMPLICHECK®	FLAME ROD
R7847B1031	3.0 SECOND FFRT	AMPLICHECK®	FLAME ROD
R7847B1064	0.8 SECOND FFRT	AMPLICHECK®	FLAME ROD*
R7847B1072	3.0 SECOND FFRT	AMPLICHECK®	FLAME ROD*, C7012A, C
R7847C1005	3.0 SECOND FFRT	DYNAMIC SELF-CHECK	C7012E, F
R7849A1015	0.8 SECOND FFRT	NONE	C7027, C7035
R7849A1023	3.0 SECOND FFRT	NONE	C7027, C7035
R7849B1013	0.8 SECOND FFRT	AMPLICHECK®	C7027, C7035
R7849B1021	3.0 SECOND FFRT	AMPLICHECK®	C7027, C7035
R7851B1000	3.0 SECOND FFRT	AMPLICHECK®	C7927, C7962
R7851B1018	0.8 SECOND FFRT	AMPLICHECK®	C7927, C7962
R7851C1008	3.0 SECOND FFRT	DYNAMIC SELF-CHECK	C7961E, F
R7852A1001	3.0 SECOND FFRT	NONE	C7915
R7852B1009	3.0 SECOND FFRT	AMPLICHECK®	C7915
R7861A1026	3.0 SECOND FFRT	DYNAMIC SELF-CHECK	C7061A, F, M
R7861A1034	0.8 SECOND FFRT	DYNAMIC SELF-CHECK	C7061A, F, M
R7886A1001	3.0 SECOND FFRT	DYNAMIC SELF-CHECK	C7076A, D

* FLAME ROD LEADWIRE RUNS GREATER THAN 50FT (1524 CM) OR PARALLEL C7012A,C.

5.) SELECT OPTIONAL COMPONENTS

KEYBOARD DISPLAY MODULE

O.S. NO.	DESCRIPTION
S7800A1001	ENGLISH LANGUAGE
S7800A1035	FRENCH LANGUAGE
S7800A1043	GERMAN LANGUAGE
S7800A1050	ITALIAN LANGUAGE
S7800A1068	SPANISH LANGUAGE
S7800A1118	KATAKANA (JAPANESE) LANGUAGE
S7800A1126	PORTUGUESE LANGUAGE
S7800A1142	ENGLISH (REQUIRED TO PROGRAM VALVE PROVING FEATURE)
S7800A1167	SPANISH (REQUIRED TO PROGRAM VALVE PROVING FEATURE)

COMMUNICATIONS

O.S. NO.	DESCRIPTION
S7810A1009	DATA CONTROLBUS® MODULE (IF NO KEYBOARD DISPLAY IS USED)
S7810M1003	MODBUS MODULE

MISCELLANEOUS

O.S. NO.	DESCRIPTION
S7820A1007	REMOTE RESET MODULE
S7830A1005	EXPANDED ANNUNCIATIOR (120 VAC, 50/60 HZ)
203541	DATA CONTROLBUS CONNECTOR, 5-WIRE
203765	REMOTE DISPLAY MOUNTING BRACKET
221729	DUST COVER, RELAY MODULE
50023821-001	KEYBOARD DISPLAY MODULE COVER, NEMA 4
204718B	KEYBOARD DISPLAY MODULE COVER, CLEAR
50023821-002	KEYBOARD DISPLAY MODULE COVER, NEMA 4, CLEAR WITH RESET BUTTON
205321B	FLUSH DISPLAY MOUNTING KIT
221818A	EXTENSION CABLE, DISPLAY 5FT (1524MM)
221818C	EXTENSION CABLE, DISPLAY 10FT (3048MM)

M15530G

EC7820 Primary Control Meeting European Community Timings

Integrated burner control for automatically fired gas, oil, or combination, single burner atmospheric with fan applications. Has automatic burner sequencing, flame supervising system status indication, system or self-diagnostics, and troubleshooting.

- Access for external electrical voltage checks.
- Application flexibility and communication interface capability.
- Five LEDs provide sequence information.
- Five function Run/Test Switch. Interchangeable plug-in amplifiers.
- Local or remote annunciation of operation and fault information (optional).
- Non-volatile memory retains history files and lockout status after loss of power.
- Compatible with existing Honeywell flame detectors.

Application: Primary Control
Interlocks: Lockout
Preignition: Yes
PrePurge: Determined by ST7800A Purge Timer Card
PostPurge: 5 sec
Early Spark Termination: Yes, 5 sec
Required Components: Q7800A, B Universal Wiring Subbases. R7847, R7849, R7861, or R7886 Flame Signal Amplifier. ST7800A Plug-in Purge Timer Card.
Frequency: 60 Hz (±10%), 50 Hz
AirFlow Check: User selectable
Second Stage Pilot Valve: Intermittent
Vibration: 0.5 G environment
Shipping and Storage Temperature Range: -40°F to +140°F (-40°C to +60°C)

Approximate, Dimensions: 5 in. wide x 5 in. high x 5 1/4 in. deep with Q7800A Subbase x 6 3/32 in. deep with Q7800B Subbase (127 mm wide x 127 mm high x 133 mm deep with Q7800A Subbase x 155 mm deep with Q7800B Subbase)
Weight lb. (kg): 1 lb 10 oz (0.7 kg)
Approvals, Swiss RE: Acceptable
Approvals, Factory Mutual: Report No. 1V9AO.AF.
Approvals, Gastec/European: GASTEC: CE-63AP3070/1, Approved to EN298.

SIL3 Capable

Dimensions in inches (millimeters)

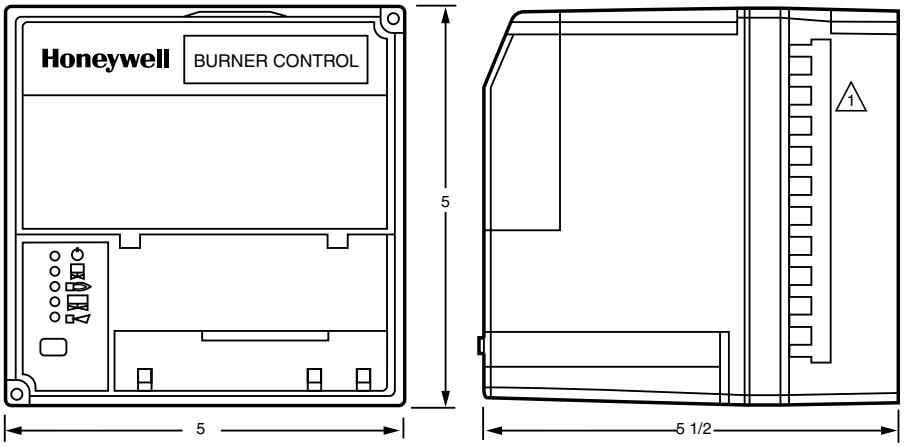

1 REMOVE ONLY FOR TERMINAL TEST ACCESS.

M12821

Material Number	Voltage	Pilot Type	Flame Establishing Period - Main	Flame Establishing Period - Pilot	Comments
EC7820A1026/U	220 to 240 Vac (+10, -15%)	interrupted	5 sec, or 8 sec, or Intermittent	5 sec or 10 sec	1 ignition attempt, Includes Modulation w/ Fan Output
EC7820A1034/U	220 to 240 Vac (+10, -15%)	interrupted	5 sec, or 8 sec, or Intermittent	5 sec or 10 sec	5 ignition attempts, Includes Modulation w/ Fan Output

EC7830; EC7850; RM7830; RM7850 Programming Control Meeting European Community Timings

Microprocessor-based integrated burner control for full modulation applications. Provides automatic burner sequencing, flame supervision, system status indication, system or self-diagnostics, and troubleshooting.

- Access for external electrical voltage checks.
- Application flexibility and communication interface capability.
- Five LEDs provide sequence information.
- Five function Run/Test Switch.
- Interchangeable plug-in amplifiers.
- Local or remote annunciation of operation and fault information (optional).
- Non-volatile memory retains history files and lockout status after loss of power.
- Compatible with existing Honeywell flame detectors.

Application: Programming Control
Flame Establishing Period - Main: 3 sec, or 5 sec, or Intermittent
Flame Establishing Period - Pilot: 3 sec or 5 sec
Interlocks: Lockout
Preignition: Yes
PrePurge: Determined by ST7800A Purge Timer Card
Early Spark Termination: Yes, 5 sec
Required Components: Q7800A,B Universal Wiring Subbases. R7847, R7849, R7861, or R7886 Flame Signal Amplifier. ST7800A Plug-in Purge Timer Card.
AirFlow Check: User selectable
Second Stage Pilot Valve: Intermittent
Pilot Type: interrupted
Vibration: 0.5 G environment
Shipping and Storage Temperature Range: -40°F to +140°F (-40°C to +60°C)

Approximate, Dimensions: 5 in. wide x 5 in. high x 5 1/4 in. deep with Q7800A Subbase x 6 3/32 in. deep with Q7800B Subbase (127 mm wide x 127 mm high x 133 mm deep with Q7800A Subbase x 155 mm deep with Q7800B Subbase)
Weight lb. (kg): 1 lb 10 oz (0.7 kg)
Approvals, Swiss RE: Acceptable
Approvals, Factory Mutual: EC7830, EC7850, RM7830-Report No. 1V9AO.AF; RM7850-Report No. J.I. OYOA9.AF
Approvals, Gastec/European: GASTEC: CE-63AP3070/1, Approved to EN298.

SIL3 Capable

Dimensions in inches (millimeters)

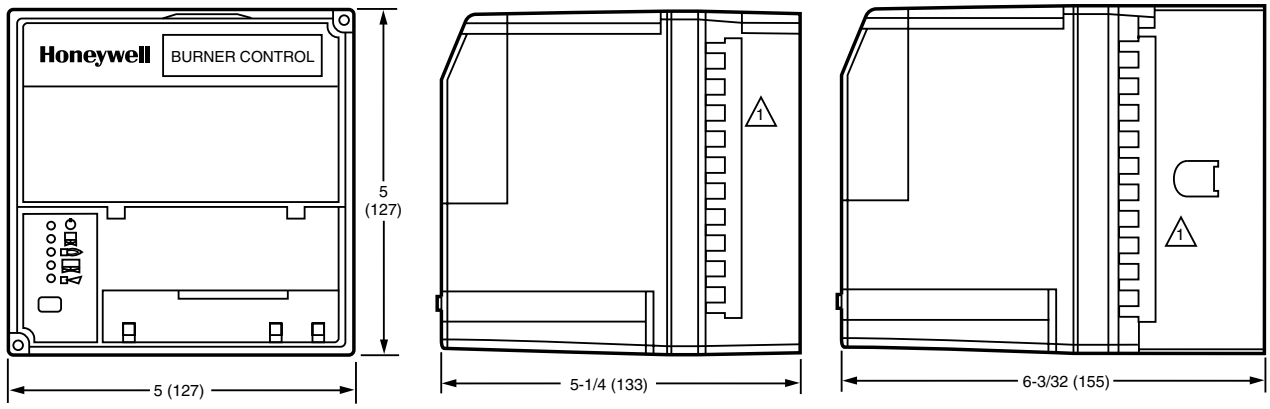

1 REMOVE ONLY FOR TERMINAL TEST ACCESS.

M15532A

Material Number	Voltage	Frequency	PostPurge	Comments
EC7830A1033/U	220 to 240 Vac (+10, -15%)	60 Hz (±10%), 50 Hz	2 sec	On/Off Power Burner
EC7830A1041/U	220 to 240 Vac (+10, -15%)	60 Hz (±10%), 50 Hz	30 sec	On/Off Power Burner
EC7830A1066/U	220 to 240 Vac (+10, -15%)	60 Hz (±10%), 50 Hz	15 sec	On/Off Power Burner
EC7850A1064/U	220 to 240 Vac (+10, -15%)	60 Hz (±10%), 50 Hz	30 sec	LHL-LF & HF Proven; Dynamic damper check
EC7850A1072/U	220 to 240 Vac (+10, -15%)	60 Hz (±10%), 50 Hz	2 sec	LHL-LF & HF Proven
EC7850A1080/U	220 to 240 Vac (+10, -15%)	60 Hz (±10%), 50 Hz	30 sec	LHL-LF & HF Proven
EC7850A1122/U	220 to 240 Vac (+10, -15%)	60 Hz (±10%), 50 Hz	15 sec	LHL-LF & HF Proven
EC7850A1148/U	220 to 240 Vac (+10, -15%)	60 Hz (±10%), 50 Hz	2 sec	LHL-LF & HF Proven
RM7830A1003/U	120 Vac (+10, -15%)	50 Hz; 60 Hz (±10%)	2 sec	On/Off Power Burner
RM7830A1011/U	120 Vac (+10, -15%)	50 Hz; 60 Hz (±10%)	15 sec	On/Off Power Burner
RM7830A1029/U	120 Vac (+10, -15%)	50 Hz; 60 Hz (±10%)	30 sec	On/Off Power Burner
RM7850A1001/U	120 Vac (+10, -15%)	50 Hz; 60 Hz (±10%)	2 sec	LHL-LF & HF Proven; Complies with Gas Appliance Directive (90/396/EEC). Low Voltage Directive (73/23/EEC). EMC Directive (89/336/EEC).
RM7850A1019/U	120 Vac (+10, -15%)	50 Hz; 60 Hz (±10%)	15 sec	LHL-LF & HF Proven; Complies with Gas Appliance Directive (90/396/EEC). Low Voltage Directive (73/23/EEC). EMC Directive (89/336/EEC).
RM7850A1027/U	120 Vac (+10, -15%)	50 Hz; 60 Hz (±10%)	30 sec	LHL-LF & HF Proven; Complies with Gas Appliance Directive (90/396/EEC). Low Voltage Directive (73/23/EEC). EMC Directive (89/336/EEC).

RM7800 Programmers

Microprocessor-based integrated burner control for automatically fired gas, oil, coal or combination fuel single burner applications. Provides safety, functional capability and features beyond conventional controls.

- Functions include automatic burner sequencing, flame supervision, system status indication, system or self-diagnostics and trouble shooting.
- Access for external electrical voltage checks.
- Application flexibility and communication interface capability.
- Five LEDs provide sequence information.
- Five function Run/Test Switch.
- Interchangeable plug-in flame amplifiers.
- Local or remote annunciation of operation and fault information (optional).
- Nonvolatile memory retains history files and lockout status after loss of power.
- Compatible with existing Honeywell flame detectors.
- Includes Keyboard Display Module.

Application: Programming Control
Preignition: Yes
PrePurge: Determined by ST7800A Purge Timer Card
PostPurge: 15 sec
Early Spark Termination: Yes, 5 sec
Required Components: Q7800A, B Universal Wiring Subbases. R7847, R7848, R7849, R7851, R7852, R7861, or R7886 Flame Signal Amplifier. ST7800A Plug-in Purge Timer Card.
Frequency: 50 Hz; 60 Hz (±10%)
AirFlow Check: User selectable
Pilot Type: interrupted
Vibration: 0.5 G environment
Shipping and Storage Temperature Range: -40°F to +140°F (-40°C to +60°C)
Approximate, Dimensions: 5 in. wide x 5 in. high x 5 1/4 in. deep with Q7800A Subbase x 6 3/32 in. deep with Q7800B Subbase (127 mm wide x 127 mm high x 133 mm deep with Q7800A Subbase x 155 mm deep with Q7800B Subbase)

Weight lb. (kg): 1 lb 10 oz (0.7 kg)
Approvals, Underwriters Laboratories Inc.: Component Recognized, File No. MP268; Guide No. MCCZ.
Approvals, CSA: Certified, File No. LR95329-3.
Approvals, FCC: FCC Part 15, Class B, Emissions.
Approvals, Swiss RE: Acceptable
Approvals, Factory Mutual: Report No. 1V9AO.AF.

SIL3 Capable

Dimensions in inches (millimeters)

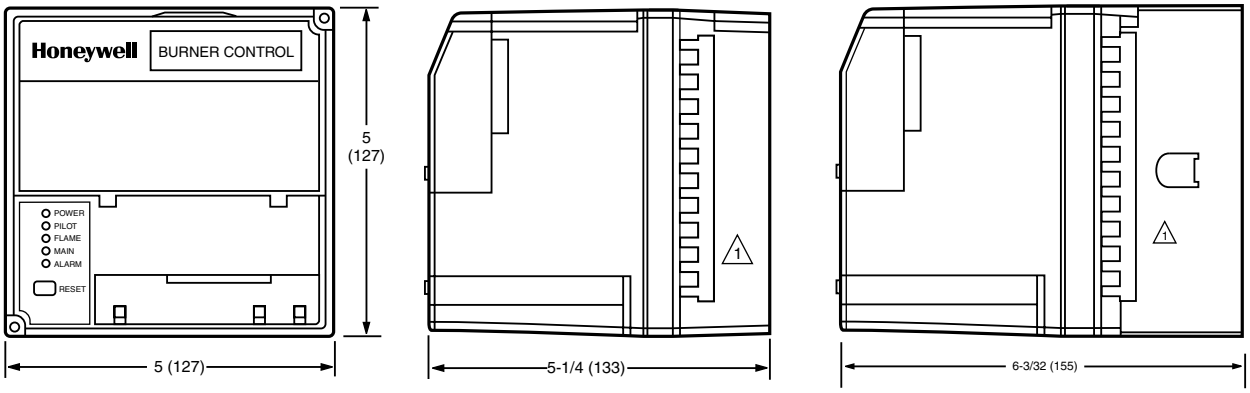

1 REMOVE ONLY FOR TERMINAL TEST ACCESS.

Material Number	Voltage	Flame Establishing Period - Main	Flame Establishing Period - Pilot	Second Stage Pilot Valve	Interlocks	Comments
RM7800E1010/U	120 Vac (+10, -15%)	10 sec or 15 sec	4 sec or 10 sec	Interrupted	Lockout	Includes S7800 Display, LHL-LF & HF Proven
RM7800G1018/U	120 Vac (+10, -15%)	10 sec, or 15 sec, or 30 sec, or Intermittent	4 sec or 10 sec	selectable	Running	Includes S7800 Display, LHL-LF Proven
RM7800L1012/U	120 Vac (+10, -15%)	10 sec or 15 sec	4 sec or 10 sec	Interrupted	Lockout	Includes S7800 Display, LHL-LF & HF Proven
RM7800L1053/U	120 Vac (+10, -15%)	10 sec or Intermittent	4 sec or 10 sec	Intermittent	Lockout	Includes S7800 Display, LHL-LF & HF Proven
RM7800M1011/U	120 Vac (+10, -15%)	10 sec or Intermittent	4 sec or 10 sec	Intermittent	Running	Includes S7800 Display, On/Off-LF proven

RM7800 Programmers with VPS

Integrated burner control for gas, oil, coal or combination fuel single burner uses. With Valve Proving Feature. RM7800L comes standard with S7800A1142 Keyboard Display.

- Functions include automatic burner sequencing, flame supervision, system status indication, system or self-diagnostics and trouble shooting.
- Access for external electrical voltage checks.
- Application flexibility and communication interface capability.
- Five LEDs provide sequence information. Power LED blinks fault code on Lockout.
- Five function Run/Test Switch.
- Interchangeable plug-in flame amplifiers.
- Local or remote annunciation of operation and fault information (optional).
- Nonvolatile memory retains history files and lockout status after loss of power.
- Compatible with existing Honeywell flame detectors.
- RM7800 comes with S7800A1142 Keyboard Display Module.
- Keyboard required to setup Valve Proving Feature and change post purge time.

Application: Programming Control w/VPS
Preignition: Yes
PrePurge: Determined by ST7800A Purge Timer Card
PostPurge: programmed with S7800A1142 display
Early Spark Termination: Yes, 5 sec
Required Components: Q7800A, B Universal Wiring Subbases. R7847, R7848, R7849, R7851, R7852, R7861, or R7886 Flame Signal Amplifier. ST7800A Plug-in Purge Timer Card.
Frequency: 50 Hz; 60 Hz (±10%)
AirFlow Check: User selectable
Pilot Type: interrupted
Vibration: 0.5 G environment
Shipping and Storage Temperature Range: -40°F to +140°F (-40°C to +60°C)
Approximate, Dimensions: 5 in. wide x 5 in. high x 5 1/4 in. deep with Q7800A Subbase x 6 3/32 in. deep with Q7800B Subbase (127 mm wide x 127 mm high x 133 mm deep with Q7800A Subbase x 155 mm deep with Q7800B Subbase)

Weight lb. (kg): 1 lb 10 oz (0.7 kg)
Approvals, Underwriters Laboratories Inc.: Component Recognized, File No. MP268; Guide No. MCCZ.
Approvals, FCC: FCC Part 15, Class B, Emissions.
Approvals, Factory Mutual: Report No. 1V9AO.AF.

SIL3 Capable

Dimensions in inches (millimeters)

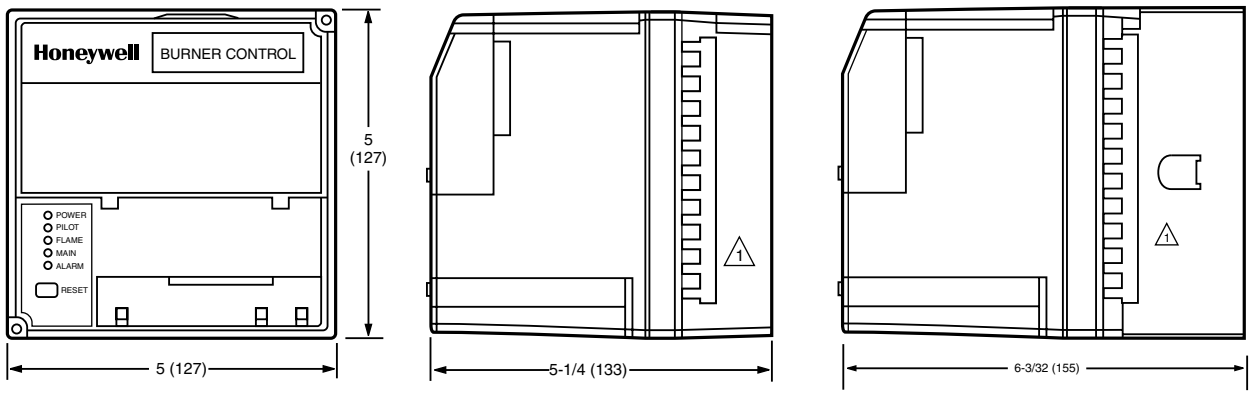

MODULE WITH SUBBASE

1 REMOVE ONLY FOR TERMINAL TEST ACCESS.

M15518B

Material Number	Voltage	Flame Establishing Period - Main	Flame Establishing Period - Pilot	Second Stage Pilot Valve	Interlocks	Comments
RM7800L1087/U	120 Vac (+10, -15%)	10 sec or 15 sec	4 sec or 10 sec	Interrupted	Lockout	Includes S7800A1142 Display, LHL-LF & HF Proven

RM7823; EC7823 Flame Switch

Dimensions in inches (millimeters)

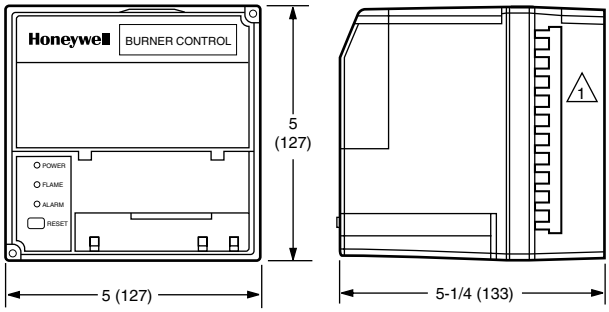

Microprocessor-based integrated flame switch for detecting a flame using rectification, ultraviolet (UV) or infrared (IR) source. Provides level of safety, functional capability and features beyond conventional controls.

- Can be fitted with any 7800 Series Amplifier to provide relay action from two single pole, double throw (SPDT) relays when flame is present or not present. RM7823A and EC7823 are a flame detector relays only.
- Suitable primary control must be used to provide safe-start check, safety lockout, load switching and other functions required in flame safeguard systems.
- Three LEDs to indicate power, flame and alarm.
- Access for external electrical voltage checks.
- Nonvolatile memory.
- Shutter drive output.
- Compatible with existing Honeywell flame detectors.

Application: Flame Switch
Required Components: Q7800A, B Universal Wiring Subbases. R7847, R7848, R7849, R7851, R7852, R7861, or R7886 Flame Signal Amplifier.
Vibration: 0.5 G environment
Shipping and Storage Temperature Range: -40°F to +140°F (-40°C to +60°C)
Approximate, Dimensions: 5 in. wide x 5 in. high x 5 1/4 in. deep with Q7800A Subbase x 6 3/32 in. deep with Q7800B Subbase (127 mm wide x 127 mm high x 133 mm deep with Q7800A Subbase x 155 mm deep with Q7800B Subbase)
Weight lb. (kg): 1 lb 13 oz (0.8 kg)
Approvals, Swiss RE: Acceptable
Comments: two SPDT outputs

Material Number	Voltage	Frequency	Approvals, Underwriters Laboratories Inc.	Approvals, CSA	Approvals, FCC	Approvals, Factory Mutual
EC7823A1004/U	220 to 240 Vac (+10, -15%)	60 Hz (±10%), 50 Hz				Report No. OY0A9.AF.
RM7823A1016/U	120 Vac (+10, -15%)	50 Hz; 60 Hz (±10%)	Component Recognized, File No. MP268; Guide No. MCCZ.	Certified, File No. LR95329-3.	FCC Part 15, Class B, Emissions.	Report No. OX4A5.AF.

RM7824 On-Off Primary Control

Dimensions in inches (millimeters)

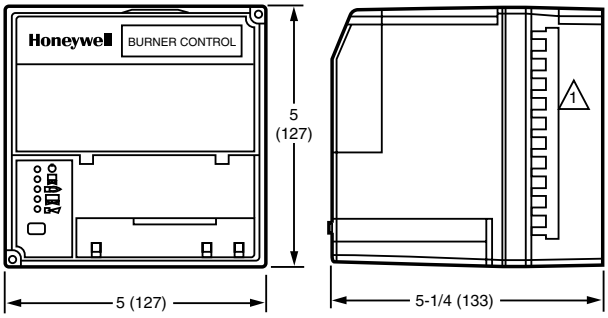

24 Vdc microprocessor-based integrated burner control for automatically fired gas, oil or combination fuel single burner applications. Provides level of safety, functional capability and features beyond the capacity of conventional controls.

- For use with R7824C Amplifier with C7024E, F Flame Detectors; R7848A, B with C7015A Flame Detectors; R7851B with C7927, C7962 Flame Detectors; or R7852A, B with C7915 Flame Detectors.
- Functions include automatic burner sequencing, flame supervision, system status indication, system or self diagnostics and troubleshooting.
- Five LEDs provide sequence information.
- Selectable recycle or lockout on loss of flame.
- Shutter drive output for use with dynamic self-check flame detectors.
- Access for external electrical voltage checks.
- Plug-in flame amplifier.
- Nonvolatile memory retains history files and lockout status after loss of power.

Application: Primary Control 24 Vdc
Required Components: Q7800A, B Universal Wiring Subbases. R7824 or R7848 Flame Signal Amplifier.
Pilot Type: intermittent
Vibration: 0.5 G environment
Shipping and Storage Temperature Range: -40°F to +140°F (-40°C to +60°C)
Approximate, Dimensions: 5 in. wide x 5 in. high x 5 1/4 in. deep with Q7800A Subbase x 6 3/32 in. deep with Q7800B Subbase (127 mm wide x 127 mm high x 133 mm deep with Q7800A Subbase x 155 mm deep with Q7800B Subbase)
Weight lb. (kg): 1 lb 13 oz (0.8 kg)
Approvals, Underwriters Laboratories Inc.: Component Recognized, File No. MP268; Guide No. MCCZ.
Approvals, CSA: Certified, File No. LR95329-3.
Approvals, FCC: FCC Part 15, Class B, Emissions.
Approvals, Swiss RE: Acceptable
Approvals, Factory Mutual: Report No. OX4A5.AF.

Material Number	Voltage	Flame Establishing Period - Main	Flame Establishing Period - Pilot
RM7824A1006/U	24 Vdc (+10, -15%)	Intermittent	4 sec or 10 sec

RM7838A Manual Start Industrial Primary Control with Purge

Microprocessor-based integrated burner control for industrial semi-automatically fired gas, oil, coal or combination fuel single burner applications. Provides level of safety, functional capability and features beyond conventional controls.

- Functions include purge, burner pilot startup, flame supervision, system status indication, system or self diagnosis and troubleshooting.
- Delays admission of fuel to combustion chamber until pilot flame has been proven and then monitors the flame through the run period while providing system status indication.
- Includes Keyboard Display Module.
- Five LEDs provide sequence information.
- Intermittent pilot valve.
- Interchangeable plug-in flame amplifier.
- Access for external electrical voltage checks.
- Nonvolatile memory retains history files and lockout status after loss of power.
- Selectable pilot flame establishing period.
- Provides application flexibility and optional communication interface capability.
- Compatible with existing Honeywell flame detectors.

Application: Semi Automatic Primary Control with Purge
Interlocks: Running
PrePurge: Determined by ST7800A Purge Timer Card
Required Components: Q7800A, B Universal Wiring Subbases. R7847, R7848, R7849, R7851, R7852, R7861, or R7886 Flame Signal Amplifier. ST7800A Plug-in Purge Timer Card.
Frequency: 50 Hz; 60 Hz (±10%)
Pilot Type: intermittent
Vibration: 0.5 G environment
Shipping and Storage Temperature Range: -40°F to +140°F (-40°C to +60°C)
Approximate, Dimensions: 5 in. wide x 5 in. high x 5 1/4 in. deep with Q7800A Subbase x 6 3/32 in. deep with Q7800B Subbase (127 mm wide x 127 mm high x 133 mm deep with Q7800A Subbase x 155 mm deep with Q7800B Subbase)

Weight lb. (kg): 1 lb 10 oz (0.7 kg)
Approvals, Underwriters Laboratories Inc.: Component Recognized, File No. MP268; Guide No. MCCZ.
Approvals, CSA: Certified, File No. LR95329-3.
Approvals, Control Safety Devices: Acceptable: CSD-1
Approvals, FCC: FCC Part 15, Class B, Emissions.
Approvals, Swiss RE: Acceptable
Approvals, Factory Mutual: Report No. OX4A5.AF.

SIL3 Capable

Dimensions in inches (millimeters)

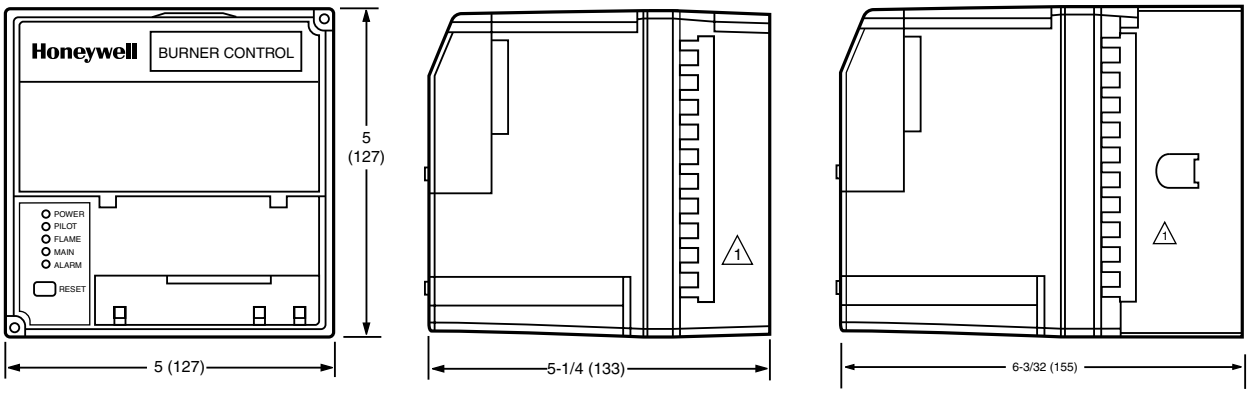

MODULE WITH SUBBASE

1 REMOVE ONLY FOR TERMINAL TEST ACCESS.

M15518B

Material Number	Voltage	Flame Establishing Period - Main	Flame Establishing Period - Pilot	Comments
RM7838A1014/U	120 Vac (+10, -15%)	Intermittent	4 sec or 10 sec	Includes S7800 Display

RM7838B, C Manual Start Industrial Programmers

Microprocessor-based integrated burner control for industrial semi-automatically fired gas, oil, coal or combination fuel single burner applications. Provides level of safety, functional capability and features beyond conventional controls.

- Functions include purge, burner pilot startup, flame supervision, system status indication, system or self diagnosis and troubleshooting.
- Delays admission of fuel to combustion chamber until pilot flame has been proven and then monitors the flame through the run period while providing system status indication.
- Includes Keyboard Display Module.
- Five LEDs provide sequence information.
- Intermittent pilot valve.
- Interchangeable plug-in flame amplifier.
- Access for external electrical voltage checks.
- Nonvolatile memory retains history files and lockout status after loss of power.
- Selectable pilot flame establishing period.
- Provides application flexibility and optional communication interface capability.
- Compatible with existing Honeywell flame detectors.

Application: Semi Automatic Programming Control
Interlocks: Lockout
Preignition: Yes
Early Spark Termination: Yes, 5 sec
Frequency: 50 Hz; 60 Hz (±10%)
Pilot Type: interrupted
Vibration: 0.5 G environment
Shipping and Storage Temperature Range: -40°F to +140°F (-40°C to +60°C)
Approximate, Dimensions: 5 in. wide x 5 in. high x 5 1/4 in. deep with Q7800A Subbase x 6 3/32 in. deep with Q7800B Subbase (127 mm wide x 127 mm high x 133 mm deep with Q7800A Subbase x 155 mm deep with Q7800B Subbase)
Weight lb. (kg): 1 lb 10 oz (0.7 kg)

Approvals, Underwriters Laboratories Inc.: Component Recognized, File No. MP268; Guide No. MCCZ.
Approvals, CSA: Certified, File No. LR95329-3.
Approvals, Control Safety Devices: Acceptable: CSD-1
Approvals, FCC: FCC Part 15, Class B, Emissions.
Approvals, Swiss RE: Acceptable
Approvals, Factory Mutual: Report No. OX4A5.AF.

SIL3 Capable

Dimensions in inches (millimeters)

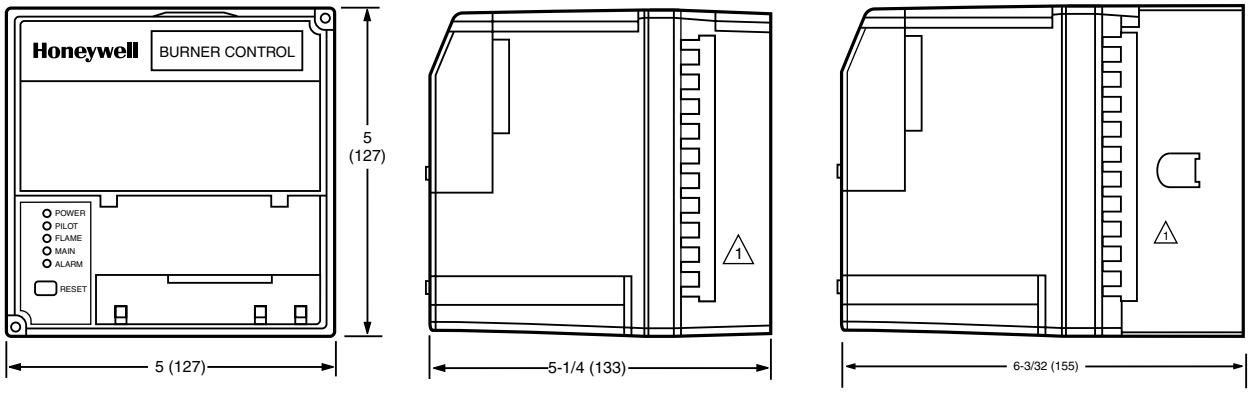

1 REMOVE ONLY FOR TERMINAL TEST ACCESS.

Material Number	Voltage	Flame Establishing Period - Main	Flame Establishing Period - Pilot	PrePurge	Required Components	Approvals, Gastec/European	Comments
RM7838B1013/U	120 Vac (+10, -15%)	10 sec or Intermittent	4 sec or 10 sec	Determined by ST7800A Purge Timer Card	Q7800A, B Universal Wiring Subbases. R7847, R7848, R7849, R7851, R7852, R7861, or R7886 Flame Signal Amplifier. ST7800A Plug-in Purge Timer Card.		Includes S7800 Display
RM7838C1004/U	120 Vac (+10, -15%)	10 sec or Intermittent	4 sec or 10 sec	Determined by ST7800C Purge Timer Card	Q7800A, B Universal Wiring Subbases. R7847, R7848, R7849, R7851, R7852, R7861, or R7886 Flame Signal Amplifier. ST7800C Plug-in Purge Timer Card.		Includes S7800 Display
RM7838C1020/U	120 Vac (+10, -15%)	10 sec or Intermittent	4 sec or 10 sec	Determined by ST7800C Purge Timer Card	Q7800A, B Universal Wiring Subbases. R7847, R7848, R7849, R7851, R7852, R7861, or R7886 Flame Signal Amplifier. ST7800C Plug-in Purge Timer Card.	Gastec EN268 Report 1156791	Includes S7800 Display

RM7838B, C Manual Start Industrial Programmers with VPS

Integrated burner control for industrial semi-automatically fired gas, oil, coal or combination fuel single burner applications. Includes Valve Proving Feature with S7800A1142 Keyboard Display.

- Functions include purge, burner pilot startup, flame supervision, system status indication, system or self diagnosis and troubleshooting.
- Delays admission of fuel to combustion chamber until pilot flame has been proven and then monitors the flame through the run period while providing system status indication.
- Includes S7800A1142 Keyboard Display Module.
- Five LEDs provide sequence information.
- Intermittent pilot valve.
- Interchangeable plug-in flame amplifier.
- Access for external electrical voltage checks.
- Nonvolatile memory retains history files and lockout status after loss of power.
- Selectable pilot flame establishing period.
- Provides application flexibility and optional communication interface capability.
- Compatible with existing Honeywell flame detectors.
- With Valve Proving Feature and Programmable Post Purge Time.
- Power LED blinks a fault code on system lockout.

Application: Semi Automatic Programming Control w/VPS
Interlocks: Lockout
Preignition: Yes
PostPurge: programmed with S7800A1142 display
Early Spark Termination: Yes, 5 sec
Frequency: 50 Hz; 60 Hz (±10%)
Pilot Type: interrupted
Vibration: 0.5 G environment
Shipping and Storage Temperature Range: -40°F to +140°F (-40°C to +60°C)
Approximate, Dimensions: 5 in. wide x 5 in. high x 5 1/4 in. deep with Q7800A Subbase x 6 3/32 in. deep with Q7800B Subbase (127 mm wide x 127 mm high x 133 mm deep with Q7800A Subbase x 155 mm deep with Q7800B Subbase)

Weight lb. (kg): 1 lb 10 oz (0.7 kg)
Approvals, Underwriters Laboratories Inc.: Component Recognized, File No. MP268; Guide No. MCCZ.
Approvals, Control Safety Devices: Acceptable: CSD-1
Approvals, FCC: FCC Part 15, Class B, Emissions.
Approvals, Swiss RE: Acceptable
Approvals, Factory Mutual: Report No. OX4A5.AF.

SIL3 Capable

Dimensions in inches (millimeters)

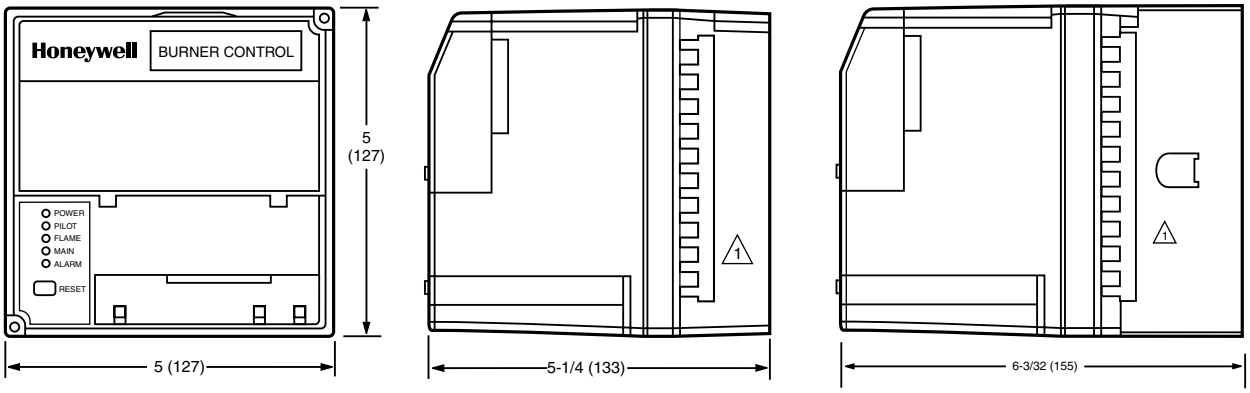

MODULE WITH SUBBASE

1 REMOVE ONLY FOR TERMINAL TEST ACCESS.

M15518B

Material Number	Voltage	Flame Establishing Period - Main	Flame Establishing Period - Pilot	PrePurge	Required Components	Comments
RM7838B1021/U	120 Vac (+10, -15%)	10 sec or Intermittent	4 sec or 10 sec	Determined by ST7800A Purge Timer Card	Q7800A, B Universal Wiring Subbases. R7847, R7848, R7849, R7851, R7852, R7861, or R7886 Flame Signal Amplifier. ST7800A Plug-in Purge Timer Card.	Includes programmable VPS (Valve Proving Switch) check feature and blinking LED fault annunciation
RM7838C1012/U	120 Vac (+10, -15%)	10 sec or Intermittent	4 sec or 10 sec	Determined by ST7800C Purge Timer Card	Q7800A, B Universal Wiring Subbases. R7847, R7848, R7849, R7851, R7852, R7861, or R7886 Flame Signal Amplifier. ST7800C Plug-in Purge Timer Card.	Includes programmable VPS (Valve Proving Switch) check feature and blinking LED fault annunciation

RM7840 Programmers

Dimensions in inches (millimeters)

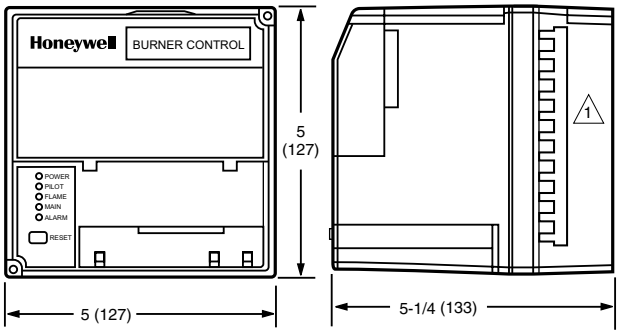

Microprocessor-based integrated burner control for automatically fired gas, oil, coal or combination fuel single burner applications. Provides safety, functional capability and features beyond conventional controls.

- Functions include automatic burner sequencing, flame supervision, system status indication, system or self-diagnostics and troubleshooting.
- Access for external electrical voltage checks.
- Application flexibility and communication interface capability.
- Five LEDs provide sequence information.
- Five function Run/Test Switch.
- Interchangeable plug-in flame amplifiers.
- Local or remote annunciation of RM7840 operation and fault information.
- Nonvolatile memory retains history files and lockout status after loss of power.
- Compatible with existing Honeywell flame detectors.

Application: Programming Control
Preignition: Yes
PrePurge: Determined by ST7800A Purge Timer Card
PostPurge: 15 sec
Early Spark Termination: Yes, 5 sec
Required Components: Q7800A, B Universal Wiring Subbases. R7847, R7848, R7849, R7851, R7852, R7861, or R7886 Flame Signal Amplifier. ST7800A Plug-in Purge Timer Card.
Voltage: 120 Vac (+10, -15%)
Frequency: 50 Hz; 60 Hz (±10%)
AirFlow Check: User selectable
Pilot Type: interrupted
Vibration: 0.5 G environment
Shipping and Storage Temperature Range: -40°F to +140°F (-40°C to +60°C)
Approximate, Dimensions: 5 in. wide x 5 in. high x 5 1/4 in. deep with Q7800A Subbase x 6 3/32 in. deep with Q7800B Subbase (127 mm wide x 127 mm high x 133 mm deep with Q7800A Subbase x 155 mm deep with Q7800B Subbase)
Weight lb. (kg): 1 lb 13 oz (0.8 kg)
Approvals, Underwriters Laboratories Inc.: Component Recognized, File No. MP268; Guide No. MCCZ.
Approvals, CSA: Certified, File No. LR95329-3.
Approvals, Control Safety Devices: Acceptable: CSD-1
Approvals, FCC: FCC Part 15, Class B, Emissions.
Approvals, Swiss RE: Acceptable
Approvals, Factory Mutual: Report No. OX4A5.AF.

SIL3 Capable

Material Number	Interlocks	Second Stage Pilot Valve	Flame Establishing Period - Main	Flame Establishing Period - Pilot	Comments
RM7840E1016/U	Lockout	Interrupted	10 sec or 15 sec	4 sec or 10 sec	LHL-LF & HF Proven
RM7840G1014/U	Running	selectable	10 sec, or 15 sec, or 30 sec, or Intermittent	4 sec or 10 sec	LHL-LF Proven
RM7840L1018/U	Lockout	Interrupted	10 sec or 15 sec	4 sec or 10 sec	LHL-LF & HF Proven
RM7840L1026/U	Lockout	Intermittent	10 sec or Intermittent	4 sec or 10 sec	LHL-LF & HF Proven
RM7840M1017/U	Running	Intermittent	10 sec or Intermittent	4 sec or 10 sec	On/Off-LF Proven

RM7840 Programmers with VPS

Dimensions in inches (millimeters)

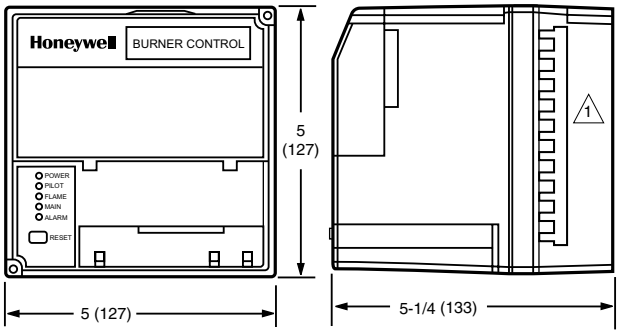

Integrated burner control for gas, oil, coal or combination fuel single burner uses. Provides safety, functional capability and features beyond normal controls. With Valve Proving Feature. Requires S7800A1142 Keyboard Display.

- Functions include automatic burner sequencing, flame supervision, system status indication, system or self-diagnostics and trouble shooting.
- Access for external electrical voltage checks.
- Application flexibility and communication interface capability.
- Five LEDs provide sequence information. Power LED blinks fault code on Lockout.
- Five function Run/Test Switch.
- Interchangeable plug-in flame amplifiers.
- Local or remote annunciation of operation and fault information (optional).
- Nonvolatile memory retains history files and lockout status after loss of power.
- Compatible with existing Honeywell flame detectors.
- RM7800 comes with S7800A1142 Keyboard Display Module.
- Keyboard required to setup Valve Proving Feature and change post purge time.

Application: Programming Control w/VPS
Preignition: Yes
PrePurge: Determined by ST7800A Purge Timer Card
PostPurge: programmed with S7800A1142 display
Early Spark Termination: Yes, 5 sec
Required Components: Q7800A, B Universal Wiring Subbases. R7847, R7848, R7849, R7851, R7852, R7861, or R7886 Flame Signal Amplifier. ST7800A Plug-in Purge Timer Card.
Frequency: 50 Hz; 60 Hz (±10%)
AirFlow Check: User selectable
Second Stage Pilot Valve: selectable
Pilot Type: interrupted
Vibration: 0.5 G environment
Shipping and Storage Temperature Range: -40°F to +140°F (-40°C to +60°C)
Approximate, Dimensions: 5 in. wide x 5 in. high x 5 1/4 in. deep with Q7800A Subbase x 6 3/32 in. deep with Q7800B Subbase (127 mm wide x 127 mm high x 133 mm deep with Q7800A Subbase x 155 mm deep with Q7800B Subbase)
Weight lb. (kg): 1 lb 10 oz (0.7 kg)
Approvals, FCC: FCC Part 15, Class B, Emissions.

SIL3 Capable

Material Number	Voltage	Flame Establishing Period - Main	Flame Establishing Period - Pilot	Interlocks	Comments	Approvals, Underwriters Laboratories Inc.	Approvals, Factory Mutual
EC7840L1014/U	220 to 240 Vac (+10, -15%)	10 sec or 15 sec	4 sec or 10 sec	Lockout	Requires S7800A1142 Display, LHL-LF & HF Proven		
RM7840G1022/U	120 Vac (+10, -15%)	10 sec, 15 sec, 30 sec, or Intermittent	4 sec or 10 sec	Running	Requires S7800A1142 Display, LHL-LF Proven	Component Recognized, File No. MP268; Guide No. MCCZ.	Report No. 1V9AO.AF.
RM7840L1075/U	120 Vac (+10, -15%)	10 sec or 15 sec	4 sec or 10 sec	Lockout	Requires S7800A1142 Display, LHL-LF & HF Proven	Component Recognized, File No. MP268; Guide No. MCCZ.	Report No. 1V9AO.AF.

RM7845 Programmers

Dimensions in inches (millimeters)

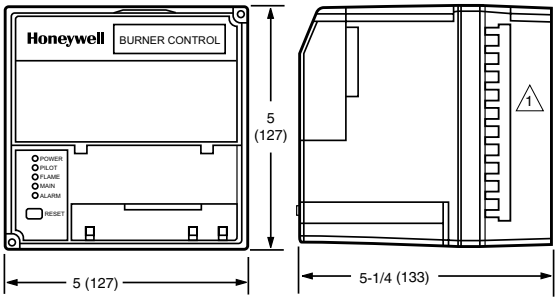

Microprocessor-based integrated burner control for automatically fired gas, oil, coal or combination fuel single burner applications. Provides safety, functional capability and features beyond conventional controls.

- Functions include automatic burner sequencing, flame supervision, system status indication, system or self-diagnostics and troubleshooting.
- Access for external electrical voltage checks.
- Application flexibility and communication interface capability.
- Five LEDs provide sequence information.
- Five function Run/Test Switch.
- Interchangeable plug-in flame amplifiers.
- Local or remote annunciation of RM7840 operation and fault information.
- Nonvolatile memory retains history files and lockout status after loss of power.
- Compatible with existing Honeywell flame detectors.

Application: Programming Control
Interlocks: Lockout
Preignition: Yes
PrePurge: Determined by ST7800A Purge Timer Card
PostPurge: 15 sec
Required Components: Q7800A, B Universal Wiring Subbases. R7847, R7848, R7849, R7851, R7852, R7861, or R7886 Flame Signal Amplifier. ST7800A Plug-in Purge Timer Card.
Voltage: 120 Vac (+10, -15%)
Frequency: 50 Hz; 60 Hz (±10%)
AirFlow Check: User selectable
Pilot Type: interrupted
Vibration: 0.5 G environment
Shipping and Storage Temperature Range: -40°F to +140°F (-40°C to +60°C)
Weight lb. (kg): 1 lb 13 oz (0.8 kg)
Approvals, Underwriters Laboratories Inc.: Component Recognized, File No. MP268; Guide No. MCCZ.
Approvals, CSA: Certified, File No. LR95329-3.
Approvals, Control Safety Devices: Acceptable: CSD-1
Approvals, FCC: FCC Part 15, Class B, Emissions.
Approvals, Swiss RE: Acceptable
Approvals, Factory Mutual: Report No. 1V9AO.AF.

Material Number	Flame Establishing Period - Main	Flame Establishing Period - Pilot	Comments
RM7845A1001/U	10 sec	4 sec or 10 sec	LHL-LF & HF Proven

RM7885; EC7885 Manual Start Industrial Primary Control

Dimensions in inches (millimeters)

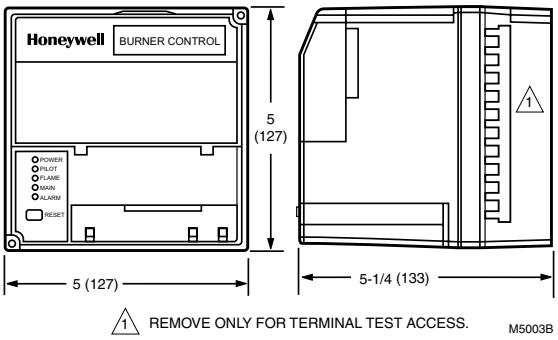

Microprocessor-based integrated burner control for industrial semi-automatically fired gas, oil, coal, or combination fuel single burner applications. Provides level of safety, functional capability and features beyond conventional controls.

- Functions include flame supervision, system status indication, system or self-diagnostics and troubleshooting.
- Adaptable to continuous firing, high-low or modulating firing rate for semi-automatic burner sequencing.
- Operates with the following: Torch-ignited main burner or torch-ignited pilot using S445A Start-Stop Station, or conventional knee or foot operated station.
- Direct-ignition oil burner or electrically ignited pilot, using S445A Start-Stop Station.
- Five LEDs provide sequence information.
- Nonvolatile memory.
- Flame signal check during standby.
- Shutter drive output.
- Compatible with existing Honeywell flame detectors.
- Terminal provided for external alarm to sound on flame failure.

Application: Semi Automatic Primary Control
Required Components: Q7800A, B Universal Wiring Subbases. R7847, R7848, R7849, R7851, R7852, R7861, or R7886 Flame Signal Amplifier.
Frequency: 50 Hz; 60 Hz (±10%)
Pilot Type: intermittent
Vibration: 0.5 G environment
Shipping and Storage Temperature Range: -40°F to +140°F (-40°C to +60°C)
Weight lb. (kg): 1 lb 13 oz (0.8 kg)
Approvals, Underwriters Laboratories Inc.: Component Recognized, File No. MP268; Guide No. MCCZ.
Approvals, CSA: Certified, File No. LR95329-3.
Approvals, FCC: FCC Part 15, Class B, Emissions.
Approvals, Swiss RE: Acceptable
Approvals, Factory Mutual: Report No. OX4A5.AF.

Material Number	Voltage	Flame Establishing Period - Main	Flame Establishing Period - Pilot
RM7885A1015/U	120 Vac (+10, -15%)	Intermittent	15 min

RM7888 PLC Adaptable Primary Control

Dimensions in inches (millimeters)

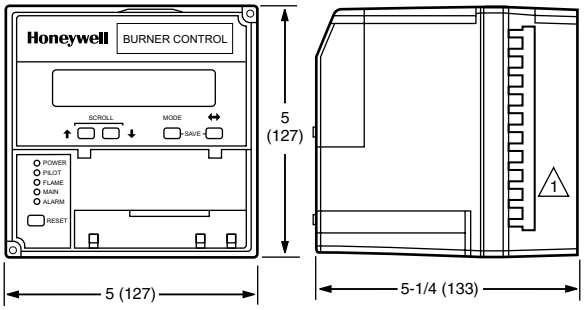

1 REMOVE ONLY FOR TERMINAL TEST ACCESS. M9494

Integrated burner control for industrial process semi-automatically fired gas, oil, coal, or combination fuels for single and multiple burner applications. PLC Adaptable.

- Functions include automatic burner startup sequencing, five user selectable run sequences, four line-voltage sequence control inputs, flame supervision, system status indication, system or self-diagnostics and troubleshooting.
- Requires a relay module, subbase, and amplifier for operation.
- Options include PC interface, keyboard display module, DATA CONTROLBUS™ MODULE, remote display mounting, first-out expanded annunciator, and COMBUSTION SYSTEM MANAGER™ software.
- Use with master system control which determines purge timing and confirms air supply and air flow.
- Nonvolatile memory retains history files and sequencing status after power loss.
- Optional remote reset capability.
- Five LEDs provide sequence information.
- Interchangeable plug-in flame amplifiers.
- Local or remote annunciation of operation and fault information.

Application: Primary Control - PLC Adaptable
Required Components: Q7800A, B Universal Wiring Subbases. R7847, R7848, R7849, R7851, R7852, R7861, or R7886 Flame Signal Amplifier.
Voltage: 120 Vac (+10, -15%)
Frequency: 50 Hz; 60 Hz (±10%)
Pilot Type: selectable
Vibration: 0.5 G environment
Shipping and Storage Temperature Range: -40°F to +140°F (-40°C to +60°C)
Approximate, Dimensions: 5 in. wide x 5 in. high x 5 1/4 in. deep with Q7800A Subbase x 6 3/32 in. deep with Q7800B Subbase (127 mm wide x 127 mm high x 133 mm deep with Q7800A Subbase x 155 mm deep with Q7800B Subbase)
Weight lb. (kg): 1 lb 10 oz (0.7 kg)
Approvals, CSA: Certified
Approvals, Factory Mutual: Approved.

Material Number	Flame Establishing Period - Main	Flame Establishing Period - Pilot	Comments
RM7888A1019/U	15 sec	4 sec	Selectable sequences
RM7888A1027/U	15 sec	10 sec	For 10 sec DSI applications, selectable sequences

RM7890 On-Off Primary Control with VPS

Dimensions in inches (millimeters)

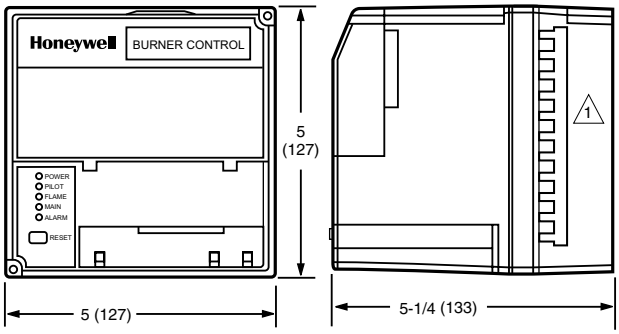

Integrated on/off primary burner control for automatically fired gas, oil or combination fuel single burner applications. Contains Valve Proving Feature. Requires S7800A1142 Display to program VPS feature.

- Functions include automatic burner sequencing, flame supervision, system status indication, system or self diagnostics and troubleshooting.
- Subbase and amplifier are required for operation.
- Power LED blinks Fault Code on lockout.
- Options include PC interface, keyboard display module, DATA CONTROLBUS™ MODULE, remote display module, first-out expanded annunciator, and COMBUSTION SYSTEM MANAGER™ software.
- Five LEDs provide sequence information.
- Interchangeable plug-in flame amplifiers.
- Optional local or remote annunciation of operation and fault information.
- Nonvolatile memory retains history files and sequencing status after power loss.
- Optional remote reset capability.
- Optional report generation.
- Selectable relight or lockout on loss of flame.
- Contains Valve Proving Feature - require S7800A1142 Keyboard Display (not provided) to set up.

Application: On-Off Primary Control w/VPS
Preignition: Yes
Required Components: Q7800A, B Universal Wiring Subbases. R7847, R7848, R7849, R7851, R7852, R7861, or R7886 Flame Signal Amplifier.
Voltage: 120 Vac (+10, -15%)
Frequency: 50 Hz; 60 Hz (±10%)
Pilot Type: intermittent
Vibration: 0.5 G environment
Shipping and Storage Temperature Range: -40°F to +140°F (-40°C to +60°C)
Approximate, Dimensions: 5 in. wide x 5 in. high x 5 1/4 in. deep with Q7800A Subbase x 6 3/32 in. deep with Q7800B Subbase (127 mm wide x 127 mm high x 133 mm deep with Q7800A Subbase x 155 mm deep with Q7800B Subbase)
Weight lb. (kg): 1 lb 13 oz (0.8 kg)
Approvals, Underwriters Laboratories Inc.: Component Recognized, File No. MP268; Guide No. MCCZ.
Approvals, CSA: Certified, File No. LR95329-3.
Approvals, FCC: FCC Part 15, Class B, Emissions.
Approvals, Swiss RE: Acceptable
Approvals, Factory Mutual: Report No. OX4A5.AF.

SIL3 Capable

Material Number	Flame Establishing Period - Main	Flame Establishing Period - Pilot	Comments
RM7890A1056/U	Intermittent	4 sec or 10 sec	Includes programmable VPS (Valve Proving Switch) check feature and blinking LED fault annunciation
RM7890B1048/U	Intermittent	4 sec or 10 sec	Includes Shutter Drive Capability, VPS (Valve Proving Switch) check and blinking LED fault annunciation

RM7890; EC7890 On-Off Primary Controls

Dimensions in inches (millimeters)

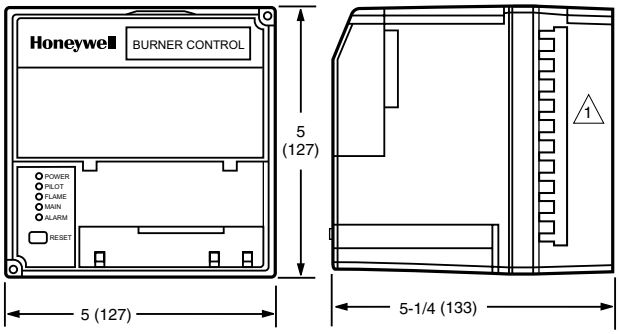

Microprocessor-based integrated primary burner control for automatically fired gas, oil or combination fuel single burner applications. Provides level of safety, functional capability and features beyond conventional controls.

- Functions include automatic burner sequencing, flame supervision, system status indication, system or self diagnostics and troubleshooting.
- Subbase and amplifier are required for operation.
- Options include PC interface, keyboard display module, DATA CONTROLBUS™ MODULE, remote display module, first-out expanded annunciator, and COMBUSTION SYSTEM MANAGER™ software.
- Five LEDs provide sequence information.
- Interchangeable plug-in flame amplifiers.
- Optional local or remote annunciation of operation and fault information.
- Nonvolatile memory retains history files and sequencing status after power loss.
- Optional remote reset capability.
- Optional report generation.
- Selectable relight or lockout on loss of flame.

Application: On-Off Primary Control
Flames Establishing Period - Main: Intermittent
Required Components: Q7800A, B Universal Wiring Subbases. R7847, R7848, R7849, R7851, R7852, R7861, or R7886 Flame Signal Amplifier.
Frequency: 50 Hz; 60 Hz (±10%)
Pilot Type: intermittent
Vibration: 0.5 G environment
Shipping and Storage Temperature Range: -40°F to +140°F (-40°C to +60°C)
Approximate, Dimensions: 5 in. wide x 5 in. high x 5 1/4 in. deep with Q7800A Subbase x 6 3/32 in. deep with Q7800B Subbase (127 mm wide x 127 mm high x 133 mm deep with Q7800A Subbase x 155 mm deep with Q7800B Subbase)
Weight lb. (kg): 1 lb 13 oz (0.8 kg)
Approvals, Swiss RE: Acceptable

SIL3 Capable

Material Number	Voltage	Flame Establishing Period - Pilot	Approvals, Underwriters Laboratories Inc.	Approvals, CSA	Approvals, Factory Mutual	Approvals, Gastec/ European	Comments
EC7890A1011/U	220 to 240 Vac (+10, -15%)	4 sec or 10 sec			Report No. 1D0A1.AF		
EC7890B1010/U	220 to 240 Vac (+10, -15%)	4 sec or 10 sec			Report No. 1D0A1.AF		Includes Shutter Drive Capability
EC7890B1028/U	220 to 240 Vac (+10, -15%)	4 sec or 10 sec			Report No. 1V9AO.AF.		Includes Shutter Drive Capability
RM7890A1015/U	120 Vac (+10, -15%)	4 sec or 10 sec	Component Recognized, File No. MP268; Guide No. MCCZ.	Certified, File No. LR95329-3.	Report No. OX4A5.AF.		
RM7890A1031/U	120 Vac (+10, -15%)	30 sec fixed	Component Recognized, File No. MP268; Guide No. MCCZ.	Certified, File No. LR95329-3.	Report No. OX4A5.AF.		
RM7890A1064/U	120 Vac (+10, -15%)	4 sec or 10 sec			Report No. 1D0A1.AF	GASTEC: CE-63AP3070/1, Approved to EN298.	
RM7890B1014/U	120 Vac (+10, -15%)	4 sec or 10 sec	Component Recognized, File No. MP268; Guide No. MCCZ.	Certified, File No. LR95329-3.	Report No. OX4A5.AF.		Includes Shutter Drive Capability
RM7890B1030/U	120 Vac (+10, -15%)	Fixed 4 sec or 10 sec PFEP	Component Recognized, File No. MP268; Guide No. MCCZ.	Certified, File No. LR95329-3.	Report No. OX4A5.AF.		Includes Shutter Drive Capability, Alarm sounds when Reset pushed.
RM7890B1055/U	120 Vac (+10, -15%)	4 sec or 10 sec	Component Recognized, File No. MP268; Guide No. MCCZ.	Certified, File No. LR95329-3.	Report No. OX4A5.AF.	Gastec EN268 Report 1156791	Includes Shutter Drive Capability
RM7890D1004/U	120 Vac (+10, -15%)	15 sec or 30 sec	Component Recognized, File No. MP268; Guide No. MCCZ.	Certified, File No. LR95329-3.	Report No. OX4A5.AF.		Higher Flame Sensor Voltage for Infra Red Heater Applications

RM7895; EC7895 On-Off Primary Control with Prepurge

Dimensions in inches (millimeters)

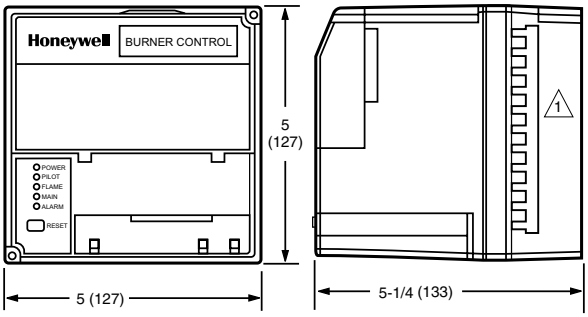

1 REMOVE ONLY FOR TERMINAL TEST ACCESS. M5003B

Microprocessor-based integrated primary burner control for automatically fired gas, oil, or combination fuel single burner applications. Provides level of safety, functional capability and features beyond conventional controls.

- Functions include automatic burner sequencing, flame supervision, system status indication, system or self diagnostics and troubleshooting.
- Subbase, amplifier, and prepurge timer are required for operation.
- Options include PC interface, keyboard display module, DATA CONTROLBUS™ MODULE, remote display module, first-out expanded annunciator, and COMBUSTION SYSTEM MANAGER™ software.
- Five LEDs provide sequence information.
- Interchangeable plug-in flame amplifiers.
- Optional local or remote annunciation of operation and fault information.
- Nonvolatile memory retains history files and sequencing status after power loss.
- Optional remote reset capability.
- Optional report generation. Selectable relight or lockout on loss of flame.
- Airflow switch check.

Application: On-Off Primary Control with Prepurge
Interlocks: Selectable
PrePurge: Determined by ST7800A Purge Timer Card
Required Components: Q7800 Universal Wiring Subbases, Flame Signal Amplifier and ST7800A Plug-in Purge Timer Card
Frequency: 50 Hz; 60 Hz (±10%)
Vibration: 0.5 G environment
Shipping and Storage Temperature Range: -40°F to +140°F (-40°C to +60°C)
Approximate, Dimensions: 5 in. wide x 5 in. high x 5 1/4 in. deep with Q7800A Subbase x 6 3/32 in. deep with Q7800B Subbase (127 mm wide x 127 mm high x 133 mm deep with Q7800A Subbase x 155 mm deep with Q7800B Subbase)
Weight lb. (kg): 1 lb 15 oz (0.9 kg)
Approvals, Swiss RE: Acceptable
Used With: 7800 Series Amplifiers (Except RM7895E1002/U uses R7847 ONLY)

Material Number	Voltage	Pilot Type	AirFlow Check	Delayed Main Valve	Flame Establishing Period - Main	Flame Establishing Period - Pilot	Approvals, Underwriters Laboratories Inc.	Approvals, CSA	Approvals, Control Safety Devices	Approvals, Factory Mutual	Comments
EC7895A1010/U	220 to 240 Vac (+10, -15%)	intermittent		No	Intermittent	4 sec or 10 sec				Report No. 1D0A1.AF	
EC7895C1000/U	220 to 240 Vac (+10, -15%)	interrupted		Yes	10 sec	4 sec or 10 sec				Report No. 1D0A1.AF	
RM7895A1014/U	120 Vac (+10, -15%)	intermittent		No	Intermittent	4 sec or 10 sec	Component Recognized, File No. MP268; Guide No. MCCZ.	Certified, File No. LR95329-3.	Acceptable: CSD-1	Report No. OX4A5.AF	
RM7895A1048/U	120 Vac (+10, -15%)	intermittent		No	Intermittent	4 sec or 10 sec	Component Recognized, File No. MP268; Guide No. MCCZ.	Certified, File No. LR95329-3.	Acceptable: CSD-1	Report No. OX4A5.AF	Includes ignition cut-out during PFEP and special sequence for early spark termination
RM7895B1013/U	120 Vac (+10, -15%)	intermittent	Dynamic	No	Intermittent	4 sec to 10 sec	Component Recognized, File No. MP268; Guide No. MCCZ.	Certified, File No. LR95329-3.	Acceptable: CSD-1	Report No. OX4A5.AF	
RM7895C1012/U	120 Vac (+10, -15%)	interrupted		Yes	10 sec	4 sec or 10 sec	Component Recognized, File No. MP268; Guide No. MCCZ.	Certified, File No. LR95329-3.	Acceptable: CSD-1	Report No. OX4A5.AF	
RM7895C1020/U	120 Vac (+10, -15%)	interrupted		Yes	10 sec	10 sec	Component Recognized, File No. MP268; Guide No. MCCZ.	Certified, File No. LR95329-3.	Acceptable: CSD-1	Report No. OX4A5.AF	Includes ignition cut-out during PFEP and special sequence for early spark termination
RM7895D1011/U	120 Vac (+10, -15%)	interrupted	Dynamic	Yes	10 sec	4 sec or 10 sec	Component Recognized, File No. MP268; Guide No. MCCZ.	Certified, File No. LR95329-3.	Acceptable: CSD-1	Report No. OX4A5.AF	
RM7895E1002/U	120 Vac (+10, -15%)	intermittent		No	Intermittent	15 sec or 30 sec	Component Recognized, File No. MP268; Guide No. MCCZ.	Certified, File No. LR95329-3.	Acceptable: CSD-1	Report No. OX4A5.AF	Higher Flame Sensor Voltage for Infra Red Heater Applications

RM7896 On-Off Primary Control with Pre- and Post-Purge

Dimensions in inches (millimeters)

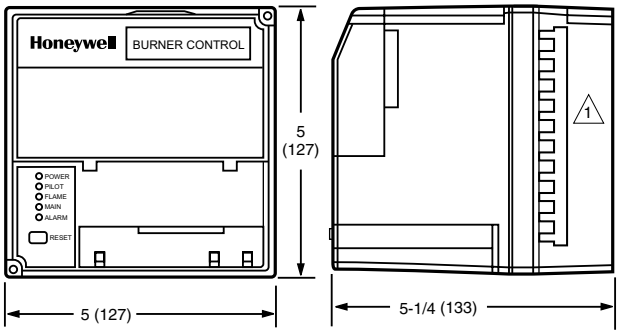

Microprocessor-based integrated full-function primary burner control for automatically fired gas, oil, or combination fuel single burner applications. Provides level of safety, functional capability and features beyond conventional controls.

- Functions include automatic burner sequencing, flame supervision, system status indication, system or self-diagnostics and troubleshooting.
- Subbase, amplifier and purge card are required for operation.
- Options include PC interface, keyboard display module, DATA CONTROLBUS™ MODULE, remote display module, first-out expanded annunciator, and COMBUSTION SYSTEM MANAGER™ software.
- 15 second postpurge.
- Five LEDs provide sequence information.
- Interchangeable plug-in flame amplifiers.
- Local or remote annunciation of operation and fault information.
- Nonvolatile memory retains history files and sequencing status after power loss.
- Optional remote reset capability.
- Optional report generation.
- Selectable recycle or lockout on loss of airflow or flame.
- Shutter drive output.
- Airflow switch check.
- Delayed main valve.

Application: On-Off Primary Control with Pre- and Post-purge
Interlocks: Selectable
PrePurge: Determined by ST7800A Purge Timer Card
Required Components: Q7800A, B Universal Wiring Subbases. R7847, R7848, R7849, R7851, R7852, R7861, or R7886 Flame Signal Amplifier. ST7800A Plug-in Purge Timer Card.
Voltage: 120 Vac (+10, -15%)
Frequency: 50 Hz; 60 Hz (±10%)
Vibration: 0.5 G environment
Shipping and Storage Temperature Range: -40°F to +140°F (-40°C to +60°C)
Approximate, Dimensions: 5 in. wide x 5 in. high x 5 1/4 in. deep with Q7800A Subbase x 6 3/32 in. deep with Q7800B Subbase (127 mm wide x 127 mm high x 133 mm deep with Q7800A Subbase x 155 mm deep with Q7800B Subbase)
Weight lb. (kg): 1 lb 15 oz (0.9 kg)
Approvals, Underwriters Laboratories Inc.: Component Recognized, File No. MP268; Guide No. MCCZ.
Approvals, CSA: Certified, File No. LR95329-3.
Approvals, FCC: FCC Part 15, Class B, Emissions.
Approvals, Swiss RE: Acceptable
Approvals, Factory Mutual: Report No. OX4A5.AF.

Material Number	Pilot Type	AirFlow Check	Flame Establishing Period - Main	Flame Establishing Period - Pilot	Delayed Main Valve	PostPurge	Comments
RM7896A1012/U	intermittent		Intermittent	4 sec or 10 sec	No	15 sec	Includes Pre- and Post-Purge.
RM7896C1010/U	interrupted		10 sec	4 sec or 10 sec	Yes	15 sec	Includes Pre- and Post-Purge.
RM7896D1019/U	interrupted	Dynamic	10 sec	4 sec or 10 sec	Yes	15 sec	Includes Pre- and Post-Purge.
RM7896D1027/U	interrupted	Dynamic	10 sec	4 sec or 10 sec	Yes	60 sec	Blinking Fault code LED, early spark termination when flame sensed, pre- and post-purge

RM7897 Automatic Primary Control with Programmable Post-Purge

Microprocessor-based integrated full-function primary burner control for automatically fired gas, oil, or combination fuel single burner applications. Programmable Post-Purge. Requires S7800A1142 Display to program post-purge feature.

- Functions include automatic burner sequencing, flame supervision, system status indication, system or self-diagnostics and troubleshooting.
- Subbase, amplifier and purge card are required for operation.
- Options include PC interface, keyboard display module, DATA CONTROLBUS™ MODULE, remote display module, first-out expanded annunciator, and COMBUSTION SYSTEM MANAGER™ software.
- Five LEDs provide sequence information. Power LED blinks fault code on Safety Shutdown.
- Interchangeable plug-in flame amplifiers.
- Local or remote annunciation of operation and fault information.
- Nonvolatile memory retains history files and sequencing status after power loss.
- Optional remote reset capability.
- Optional report generation.
- Selectable recycle or lockout on loss of airflow or flame.
- Shutter drive output.
- Airflow switch check.
- Delayed main valve.
- Programmable post-purge using S7800A1142 Keyboard Display (not provided).

Application: On-Off Primary Control with Pre- and Programmable Post-purge
Flame Establishing Period - Pilot: 4 sec or 10 sec
Interlocks: Selectable
Preignition: Yes
PrePurge: Determined by ST7800A Purge Timer Card
PostPurge: programmed with S7800A1142 display
Required Components: Q7800A, B Universal Wiring Subbases. R7847, R7848, R7849, R7851, R7852, R7861, or R7886 Flame Signal Amplifier. ST7800A Plug-in Purge Timer Card.
Frequency: 50 Hz; 60 Hz (±10%)
Vibration: 0.5 G environment
Shipping and Storage Temperature Range: -40°F to +140°F (-40°C to +60°C)
Approximate, Dimensions: 5 in. wide x 5 in. high x 5 1/4 in. deep with Q7800A Subbase x 6 3/32 in. deep with Q7800B Subbase (127 mm wide x 127 mm high x 133 mm deep with Q7800A Subbase x 155 mm deep with Q7800B Subbase)

Weight lb. (kg): 1 lb 15 oz (0.9 kg)
Approvals, Underwriters Laboratories Inc.: Component Recognized, File No. MP268; Guide No. MCCZ.
Approvals, CSA: Certified, File No. LR95329-3.
Approvals, Control Safety Devices: Acceptable: CSD-1
Approvals, FCC: FCC Part 15, Class B, Emissions.
Approvals, Swiss RE: Acceptable
Approvals, Factory Mutual: Report No. OX4A5.AF.

SIL3 Capable

Material Number	Voltage	Pilot Type	Delayed Main Valve	Comments	Used With
RM7897A1002/U	120 Vac (+10, -15%)	selectable		Includes blinking LED fault annunciation feature	7800 Series Amplifiers
RM7897C1000/U	120 Vac (+10, -15%)	selectable	Yes	Includes blinking LED fault annunciation feature	7800 Series Amplifiers

RM7898 On-Off Primary Control with VPS

Integrated full-function primary burner control for gas, oil, or combination fuel single burner applications. Include Programmable Post-Purge and Valve Proving Feature. Requires S7800A1142 Display to program VPS and post-purge features.

- Functions include automatic burner sequencing, flame supervision, system status indication, system or self-diagnostics and troubleshooting.
- Subbase, amplifier and purge card are required for operation.
- Options include PC interface, keyboard display module, DATA CONTROLBUS™ MODULE, remote display module, first-out expanded annunciator, and COMBUSTION SYSTEM MANAGER™ software.
- Programmable post-purge.
- Five LEDs provide sequence information. Power LED Blinks Fault code on safety shutdown.
- Interchangeable plug-in flame amplifiers.
- Local or remote annunciation of operation and fault information.
- Nonvolatile memory retains history files and sequencing status after power loss.
- Optional remote reset capability.
- Optional report generation.
- Selectable recycle or lockout on loss of airflow or flame.
- Shutter drive output.
- Airflow switch check.
- Programmable post-purge and Valve Proving feature with S7800A1142 Keyboard Display (not supplied).

Application: On-Off Primary Control w/VPS
Flame Establishing Period - Pilot: 4 sec or 10 sec
Interlocks: Selectable
Preignition: Yes
PrePurge: Determined by ST7800A Purge Timer Card
PostPurge: programmed with S7800A1142 display
Required Components: Q7800A, B Universal Wiring Subbases. R7847, R7848, R7849, R7851, R7852, R7861, or R7886 Flame Signal Amplifier. ST7800A Plug-in Purge Timer Card.
Frequency: 50 Hz; 60 Hz (±10%)
Pilot Type: selectable
Vibration: 0.5 G environment
Shipping and Storage Temperature Range: -40°F to +140°F (-40°C to +60°C)

Approximate, Dimensions: 5 in. wide x 5 in. high x 5 1/4 in. deep with Q7800A Subbase x 6 3/32 in. deep with Q7800B Subbase (127 mm wide x 127 mm high x 133 mm deep with Q7800A Subbase x 155 mm deep with Q7800B Subbase)
Weight lb. (kg): 1 lb 15 oz (0.9 kg)
Approvals, Underwriters Laboratories Inc.: Component Recognized, File No. MP268; Guide No. MCCZ.
Approvals, CSA: Pending
Approvals, FCC: FCC Part 15, Class B, Emissions.
Approvals, Swiss RE: Acceptable
Approvals, Factory Mutual: Report No. OX4A5.AF.

SIL3 Capable

Material Number	Voltage	Early Spark Terminations	Comments	Used With
RM7898A1000/U	120 Vac (+10, -15%)		Includes blinking LED fault annunciation feature	7800 Series Amplifiers
RM7898A1018/U	120 Vac (+10, -15%)	Special Sequence	Includes blinking LED fault annunciation feature, with early spark termination	7800 Series Amplifiers

R7120M Fireye M Series Replacement Control

The Honeywell R7120M Burner Control Modules are microprocessor-based integrated burner controls. It is a plug in replacement of Fireye M series controls for automatically fired gas, oil or combination fuel on/off single burner applications.

- Functions provided by the R7120M include automatic burner sequencing, flame supervision, system status indication, system or self-diagnostics and troubleshooting.
- Plug in replacement for Fireye M series controls using the existing Fireye wiring subbase.
- Require ST7800 Purge Timer and appropriate R78XX Amplifier to complete the replacement.

Application: Replacement Primary Control for Fireye M Series - Intermittent Pilot
Interlocks: Running
PrePurge: Determined by ST7800A Purge Timer Card
PostPurge: programmed with S7800A1142 display
Required Components: R7847, R7848, R7849, R7851, R7852, R7861, or R7886 Flame Signal Amplifier. ST7800 Plug-in Purge Timer Card.
Frequency: 50 Hz; 60 Hz
Vibration: 0.5 G environment

Shipping and Storage Temperature Range: -40°F to +135°F (-40°C to +57°C)
Approximate, Dimensions: 7 in. wide x 6 5/32 in. high x 5 3/4 in. deep (177 mm wide x 156 mm high x 146 mm deep)
Weight lb. (kg): 3 lb 1 oz (1.4 kg)
Approvals, Underwriters Laboratories Inc.: Component Recognized, File No. MP268; Guide No. MCCZ.
Approvals, FCC: FCC Part 15, Class B, Emissions.

Material Number	Voltage	Pilot Type	AirFlow Check	Flame Establishing Period - Main	Flame Establishing Period - Pilot	Comments
R7120M1001/U	120 Vac (+10, -15%)	intermittent	User selectable	Intermittent	4 sec or 10 sec	On/Off
R7120M1019/U	120 Vac (+10, -15%)	interrupted	User selectable	10 sec	4 sec or 10 sec	On/Off

R7140 Programmers

Dimensions in inches (millimeters)

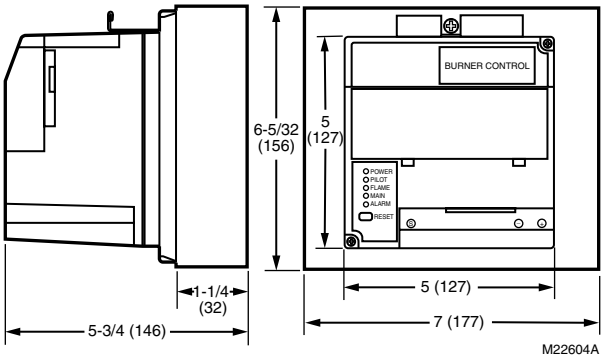

The Honeywell R7140G, L, M Burner Control Modules are microprocessor-based integrated burner control for automatically fired gas, oil or combination fuel single burner applications.

- Functions provided by the R7140G, L, M include automatic burner sequencing, flame supervision, system status indication, system or self-diagnostics and troubleshooting.
- Upgrade replacement for BC7000 or R4140 legacy Programmer controls.
- Require ST7800 Purge Timer and appropriate R78XX Amplifier to complete the replacement.

Application: Upgrade Replacement Programming Control for R4140 or BC7000
Preignition: Yes
PrePurge: Determined by ST7800A Purge Timer Card
PostPurge: 15 sec
Early Spark Termination: Yes, 5 sec
Required Components: R7847, R7848, R7849, R7851, R7852, R7861, or R7886 Flame Signal Amplifier. ST7800 Plug-in Purge Timer Card.
Voltage: 120 Vac (+10, -15%)
Frequency: 50 Hz; 60 Hz (±10%)
AirFlow Check: User selectable
Vibration: 0.5 G environment
Shipping and Storage Temperature Range: -40°F to +140°F (-40°C to +60°C)
Approximate, Dimensions: 7 in. wide x 6 5/32 in. high x 5 3/4 in. deep (177 mm wide x 156 mm high x 146 mm deep)
Weight lb. (kg): 3 lb 1 oz (1.4 kg)
Approvals, Underwriters Laboratories Inc.: Component Recognized, File No. MP268; Guide No. MCCZ.
Approvals, FCC: FCC Part 15, Class B, Emissions.

Material Number	Pilot Type	Flame Establishing Period - Main	Flame Establishing Period - Pilot	Second Stage Pilot Valve	Interlocks	Comments
R7140G1000/U	Interrupted or Intermittent	10 sec, or 15 sec, or 30 sec, or Intermittent	4 sec or 10 sec	selectable	Running	LHL-LF Proven
R7140G2008/U	Interrupted or Intermittent	10 sec, or 15 sec, or 30 sec, or Intermittent	4 sec or 10 sec		Running	LHL-LF Proven
R7140L1009/U	interrupted	10 sec or 15 sec	4 sec or 10 sec	Interrupted	Lockout	LHL-LF & HF Proven
R7140L2007/U	interrupted	10 sec or 15 sec	4 sec or 10 sec	Interrupted	Lockout	LHL-LF & HF Proven
R7140M1007/U	Interrupted or Intermittent	10 sec or Intermittent	4 sec or 10 sec	Intermittent	Running	On/Off-LF Proven

Q7800 22 Terminal Universal Wiring Subbases

Burner, panel or wall mount subbases for 7800 SERIES relay modules and S7830A Expanded Annunciator.

- Makes electrical connections for 7800 SERIES relay modules or S7830A Expanded Annunciator through bifurcated contacts.
- Provides terminals for field wiring.
- Twenty-two terminals.

Vibration: 0.5 G environment
Shipping and Storage Temperature Range: -40°F to +140°F (-40°C to +60°C)
Approvals, CSA: Certified, File No. LR95329-3.

Material Number	Application	Approximate, Dimensions	Weight lb. (kg)	Approvals, Underwriters Laboratories Inc.	Comments	Used With
Q7800A1005/U	Wiring Subbase	4 31/32 in. wide x 4 31/32 in. high x 1 13/32 in. deep (126 mm wide x 126 mm high x 36 mm deep)	7 oz (0.20 kg)	Component Recognized, File No. MP268; Guide No. MCCZ2.	Panel mount	
Q7800B1003/U	Wiring Subbase	4 31/32 in. wide x 4 31/32 in. high x 1 13/32 in. deep (126 mm wide x 126 mm high x 36 mm deep)	1 lb 3 oz (0.54 kg)	Component Recognized, File No. MP268; Guide No. MCCZ.	Burner/wall mount 2 knockouts each end	
Q7800B1011/U	Wiring Subbase	4 31/32 in. wide x 4 31/32 in. high x 3 in. deep (126 mm wide x 126 mm high x 76 mm deep)	1 lb 3 oz (0.54 kg)	Component Recognized, File No. MP268; Guide No. MCCZ.	Burner/wall mount 3 knockouts each end	
Q7800F1004/U	Wiring Adapter Subbase	5 in. high x 5 in. wide x 1 3/4 in. deep (127 mm high x 127 mm wide x 44 mm deep)	15 oz (0.43 kg)	Component Recognized, File No. MP268; Guide No. MCCZ2.	Burner/wall mount adapter subbase for RA890	RM7890
Q7800F1012/U	Wiring Adapter Subbase	5 in. high x 5 in. wide x 1 3/4 in. deep (127 mm high x 127 mm wide x 44 mm deep)	15 oz (0.43 kg)	Component Recognized, File No. MP268; Guide No. MCCZ2.	Burner/wall mount adapter subbase for R4795	RM7895

Q7800A dimensions in inches (millimeters)

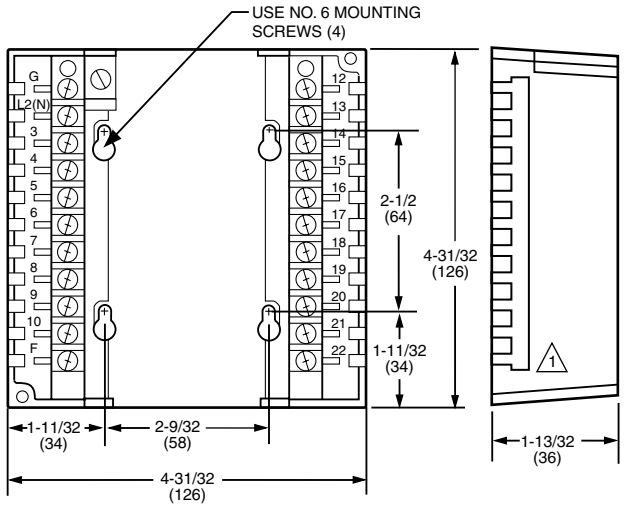

Q7800F dimensions in inches (millimeters)

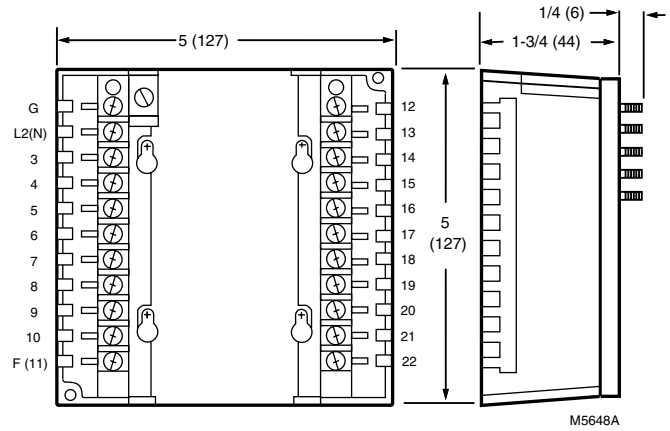

Q7800B1003 dimensions in inches (millimeters)

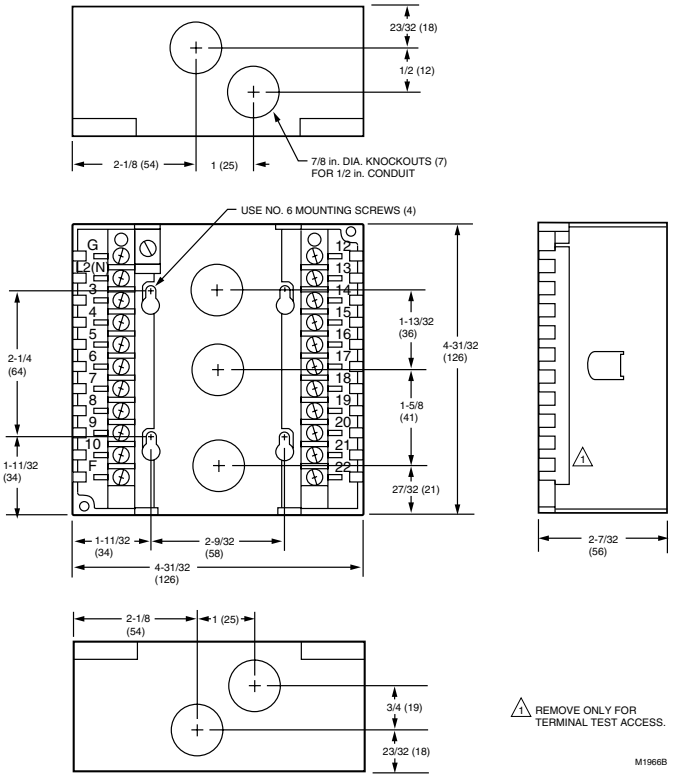

Q7800B1011 dimensions in inches (millimeters)

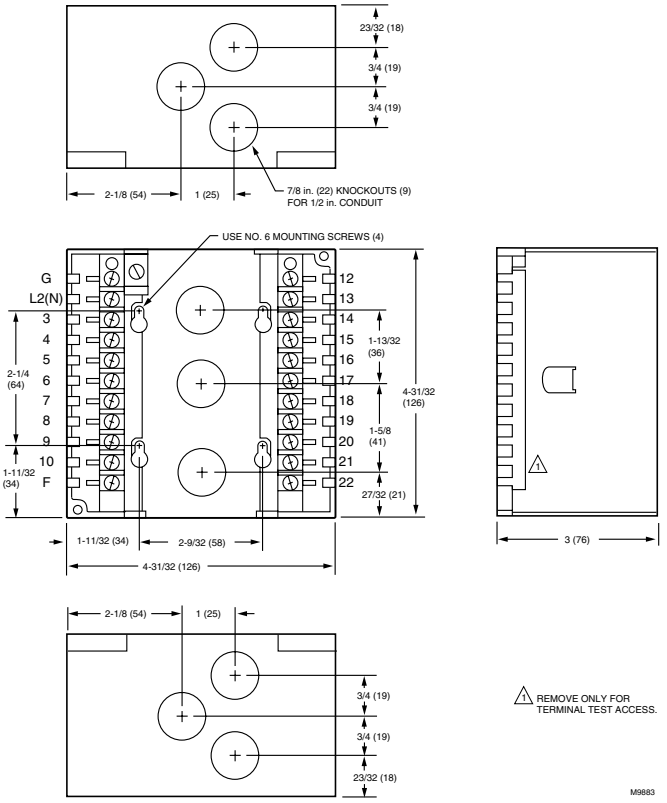

S7800 Keyboard Display Module

Dimensions in inches (millimeters)

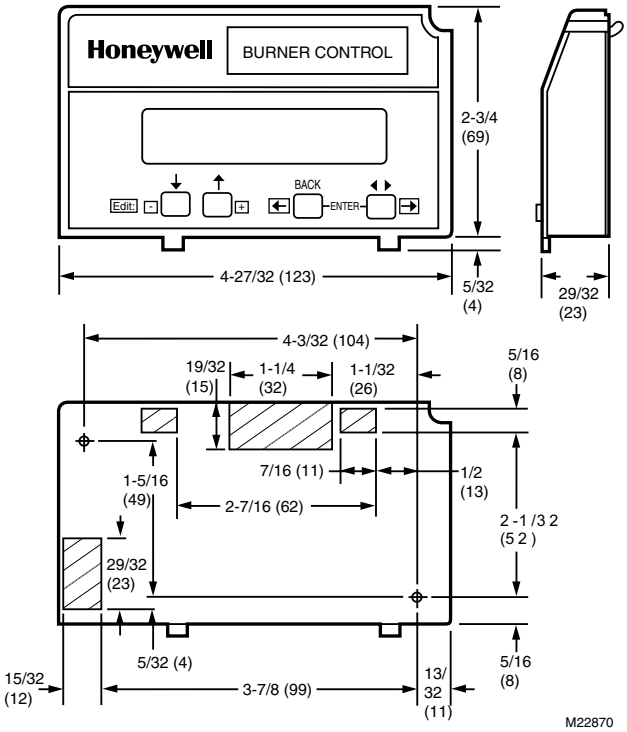

Provides current status of burner sequence, timing information, hold information and lockout information, as well as selectable or preemptive messages.

- Application flexibility.
- First-out annunciation and system diagnostics provided by 2 row by 20 column Vacuum Fluorescent Display (VFD).
- S7800A1001 offers “Call Service” (Business Card) programmable message displayed when system lockout occurs.
- S7800A1001 series 5 and greater has selectable ModBus Feature.
- Local or remote annunciation of operation and fault information.
- First out expanded annunciation with 24 limit and interlock LEDs enhances keyboard display module information.
- Remote reset.

Application: Keyboard Display
Vibration: 0.5 G environment
Shipping and Storage Temperature Range: -40°F to +140°F (-40°C to +60°C)
Approximate, Dimensions: 4 27/32 in. wide x 2 29/32 in. high x 29/32 in. deep (123 mm wide x 73 mm high x 23 mm deep)
Weight lb. (kg): 4 oz (0.11 kg)
Approvals, Underwriters Laboratories Inc.: Component Recognized, File No. MP268; Guide No. MCCZ.
Approvals, CSA: Certified, File No. LR95329-3.
Approvals, FCC: FCC Part 15, Class B, Emissions.
Approvals, Swiss RE: Acceptable
Approvals, Factory Mutual: Report No. 1V9AO.AF.

Material Number	Voltage	Comments
S7800A1001/U	13 Vdc peak fullwave rectified (+20/-15%).	English Language
S7800A1035/U	13 Vdc peak fullwave rectified (+20/-15%).	French Language
S7800A1043/U	13 Vdc peak fullwave rectified (+20/-15%).	German Language
S7800A1050/U	13 Vdc peak fullwave rectified (+20/-15%).	Italian Language
S7800A1068/U	13 Vdc peak fullwave rectified (+20/-15%).	Spanish Language
S7800A1118/U	13 Vdc peak fullwave rectified (+20/-15%).	Japanese Language
S7800A1126/U	13 Vdc peak fullwave rectified (+20/-15%).	Portuguese Language

S7800 Keyboard Display Module for VP Programming

Dimensions in inches (millimeters)

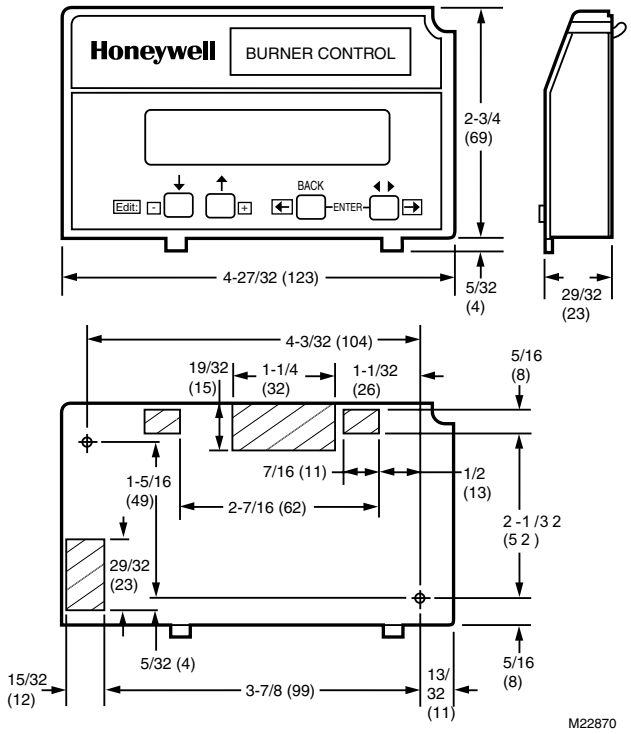

Provides current status of burner sequence, timing information, hold information and lockout information, as well as selectable or preemptive messages.

- Application flexibility.
- First-out annunciation and system diagnostics provided by 2 row by 20 column Vacuum Fluorescent Display (VFD).
- "Call Service" (Business Card) programmable message displayed when system lockout occurs.
- Local or remote annunciation of operation and fault information.
- First out expanded annunciation with 24 limit and interlock LEDs enhances keyboard display module information. Display can be Programmed to customize the expanded annunciator messages to the system.
- Required to program Valve Proving and Post Purge feature on selected 7800 Series devices.
- Can be setup for ModBus Communication.
- Provides burner controller data.
- Remote reset.

Application: Keyboard Display for VP setup
Vibration: 0.5 G environment
Shipping and Storage Temperature Range: -40°F to +140°F (-40°C to +60°C)
Approximate, Dimensions: 4 27/32 in. wide x 2 29/32 in. high x 29/32 in. deep (123 mm wide x 73 mm high x 23 mm deep)
Weight lb. (kg): 4 oz (0.11 kg)
Approvals, Underwriters Laboratories Inc.: Component Recognized, File No. MP268; Guide No. MCCZ.
Approvals, CSA: Certified, File No. LR95329-3.
Approvals, FCC: FCC Part 15, Class B, Emissions.
Approvals, Swiss RE: Acceptable
Approvals, Factory Mutual: Report No. 1V9AO.AF.

Material Number	Voltage	Comments
S7800A1142/U	13 Vdc peak fullwave rectified (+20/-15%).	English Language, Capable of displaying special "Call Service" messages, allows setup of S7830A1005 Expanded Annunciator messages, used for VPS programming, and programming Post Purge on select 7800 Devices
S7800A1167/U	13 Vdc peak fullwave rectified (+20/-15%).	Spanish Language with Valve Proving, Post-purge, "Call Service", and Expanded Annunciator programming ability

S7810A Data ControlBus™ Module

Supports remote mounting of S7800 Keyboard Display Module, personal computer communications interface and remote reset.

- Use with remotely mounted S7800 Keyboard Display Module.
- Installs directly on the front of 7800 SERIES Relay Modules.
- Provides communications bus interface and remote reset.

Application: ControlBus™ Module
Vibration: 0.5 G environment
Shipping and Storage Temperature Range: -40°F to +140°F (-40°C to +60°C)
Approximate, Dimensions: 4 27/32 in. wide x 3 11/32 in. high x 29/32 in. deep (123 mm wide x 84 mm high x 23 mm deep)
Weight lb. (kg): 4 oz (0.11 kg)
Approvals, Underwriters Laboratories Inc.: Component Recognized, File No. MP268; Guide No. MCCZ2.
Approvals, CSA: Certified, File No. LR95329-3.
Approvals, Factory Mutual: Report No. 1V9AO.AF.

Dimensions in inches (millimeters)

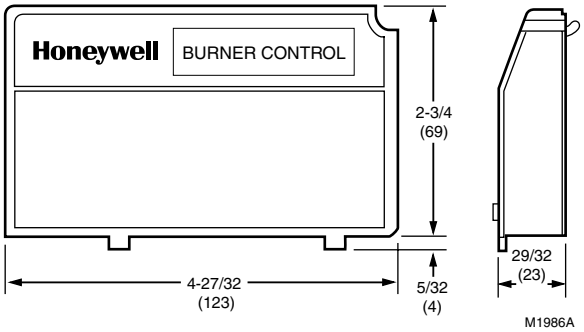

Material Number	Voltage	Comments
S7810A1009/U	13 Vdc peak fullwave rectified (+20/-15%).	Includes 203541 5-wire Connector

S7810M ModBus Module

S7810M ModBus Module operates as ModBus RTU slave device.

- Provides ability to remotely mount the S7800 Keyboard Display Module.
- Installs directly on the front of 7800 SERIES Relay Modules.
- Provides ModBus communications bus interface.
- Remote reset.

Vibration: 0.5 G environment
Shipping and Storage Temperature Range: -40°F to +140°F (-40°C to +60°C)
Approximate, Dimensions: 4 27/32 in. wide x 2 29/32 in. high x 29/32 in. deep (123 mm wide x 73 mm high x 23 mm deep)
Weight lb. (kg): 4 oz (0.11 kg)
Approvals, Underwriters Laboratories Inc.: Component Recognized, File No. MP268; Guide No. MCCZ2.
Approvals, CSA: Certified, File No. LR95329-3.
Approvals, Factory Mutual: Report No. 1V9AO.AF.

Dimensions in inches (millimeters)

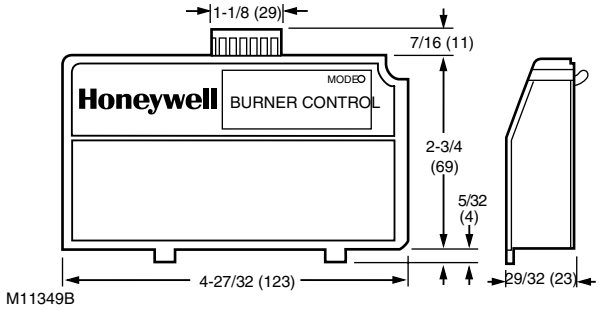

Material Number	Voltage	Application	Comments	Approvals, Gastec/European
S7810M1003/U	13 Vdc peak fullwave rectified (+20/-15%).	ControlBus™ Module-MODBUS	Includes 208727 8 pin electrical connector	
S7810M1029/U	13 Vdc peak fullwave rectified (+20/-15%).	ControlBus™ Module-MODBUS - CE Certified (no reset allowed)	Includes 208727 8 pin electrical connector	Gastec EN268 Report 1156791

S7820 Remote Reset Module

Serves as link between remote reset pushbutton and relay module. Allows 7800 SERIES relay module to be reset from a remote location.

- Reset button can be installed up to 1000 feet away.
- Installs directly on the front of 7800 SERIES relay module.

Vibration: 0.5 G environment
Shipping and Storage Temperature Range: -40°F to +140°F (-40°C to +60°C)
Approximate, Dimensions: 4 27/32 in. wide x 2 29/32 in. high x 29/32 in. deep (123 mm wide x 73 mm high x 23 mm deep)
Weight lb. (kg): 3 oz (0.09 kg)
Approvals, Underwriters Laboratories Inc.: Component Recognized, File No. MP268; Guide No. MCCZ2.
Approvals, CSA: Certified, File No. LR95329-3.
Approvals, Factory Mutual: Report No. 1V9AO.AF.

Dimensions in inches (millimeters)

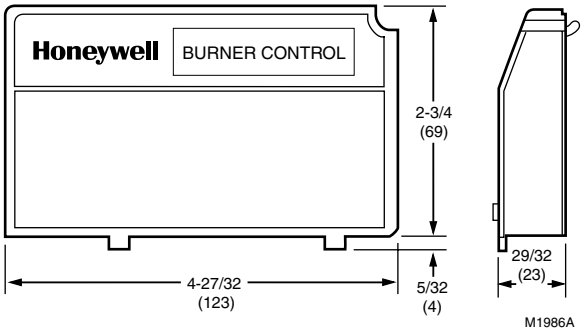

Material Number	Application	Comments
S7820A1007/U	Remote Reset Module	Includes 203541 5-wire Connector

S7830 First Out Expanded Annunciator

Microprocessor-based expanded annunciator to support the 7800 SERIES relay modules for first-out annunciation, sequencing, system or self-diagnostics and troubleshooting.

- Twenty-six status LEDs.
- Front panel LED array-arranged to indicate flow of line-voltage through string of limits, controls and interlocks.
- Selectable current and first-out LED array display status.
- Twenty-one monitored contact points.
- Access for external electrical voltage checks.

Required Components: 7800 Series Relay Modules and Q7800A, B Subbases
Frequency: 50 Hz; 60 Hz (±10%)
Vibration: 0.5 G environment
Shipping and Storage Temperature Range: -40°F to +140°F (-40°C to +60°C)
Approximate, Dimensions: 5 in. wide x 5 in. high x 5 1/4 in. deep with Q7800A Subbase x 6 3/32 in. deep with Q7800B Subbase (127 mm wide x 127 mm high x 133 mm deep with Q7800A Subbase x 155 mm deep with Q7800B Subbase)

Weight lb. (kg): 1 lb 6 oz (0.62 kg)
Approvals, Underwriters Laboratories Inc.: Component Recognized, File No. MH17367; Guide No. MJAT.
Approvals, CSA: Certified, File No. LR95329.
Approvals, FCC: FCC Part 15, Class B, Emissions.
Approvals, Swiss RE: Acceptable
Approvals, Factory Mutual: Report No. 1V9AO.AF.

Dimensions in inches (millimeters)

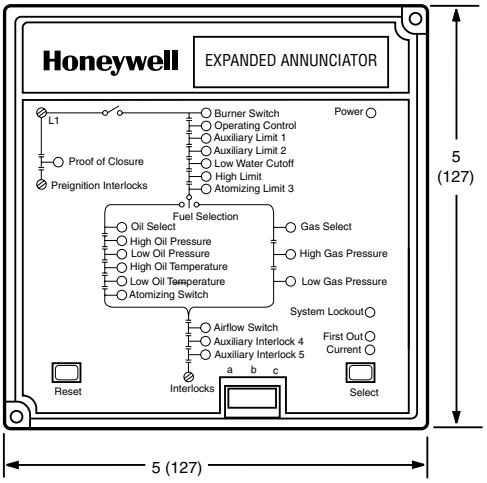

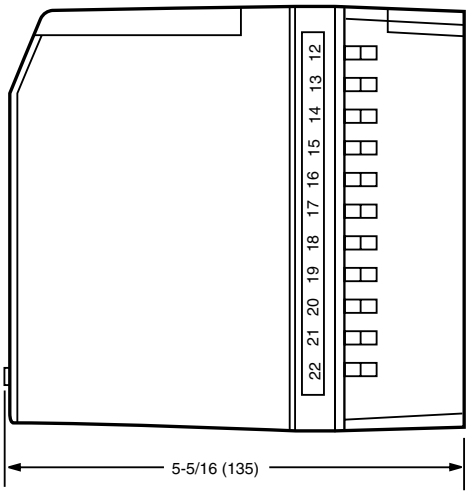

M5182

Material Number	Voltage	Application
S7830A1005/U	120 Vac (+10, -15%)	Expanded Annunciator

ST7800 Plug In Purge Timer

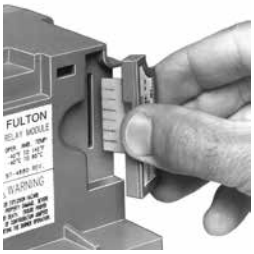

Provides the prepurge timing for select 7800 SERIES relay modules. ST7800C used with the RM7838C only.

Approvals, Underwriters Laboratories Inc.: Component Recognized, File No. MP268; Guide No. MCCZ2.
Approvals, CSA: Certified, File No. LR95329-3.
Approvals, Factory Mutual: Approved: Report No. 2X0A1.AF.

Material Number	PrePurge	Application
ST7800A1005/U	2 seconds	Purge Timer
ST7800A1013/U	7 seconds	Purge Timer
ST7800A1021/U	10 seconds	Purge Timer
ST7800A1039/U	30 seconds	Purge Timer
ST7800A1047/U	40 seconds	Purge Timer
ST7800A1054/U	60 seconds	Purge Timer
ST7800A1062/U	90 seconds	Purge Timer
ST7800A1070/U	2.5 minutes	Purge Timer
ST7800A1088/U	4.0 minutes	Purge Timer
ST7800A1096/U	6.0 minutes	Purge Timer
ST7800A1104/U	9.0 minutes	Purge Timer
ST7800A1112/U	12.0 minutes	Purge Timer
ST7800A1120/U	15.0 minutes	Purge Timer
ST7800A1138/U	22.0 minutes	Purge Timer
ST7800A1146/U	30.0 minutes	Purge Timer
ST7800C1003/U	7 seconds	Purge Timer for RM7838C Only
ST7800C1011/U	20 seconds	Purge Timer for RM7838C Only
ST7800C1029/U	4.0 minutes	Purge Timer for RM7838C Only
ST7800C1037/U	6.0 minutes	Purge Timer for RM7838C Only
ST7800C1045/U	8.0 minutes	Purge Timer for RM7838C Only
ST7800C1052/U	10.0 minutes	Purge Timer for RM7838C Only
ST7800C1086/U	16.0 minutes	Purge Timer for RM7838C Only
ST7800C1102/U	20.0 minutes	Purge Timer for RM7838C Only
ST7800C1128/U	24.0 minutes	Purge Timer for RM7838C Only
ST7800C1136/U	30.0 minutes	Purge Timer for RM7838C Only

7800 Series Accessories or Parts

Application: Accessory or Replacement Part

Material Number	Comments	Used With	
203541/U		S7800 Display	
203765/U	Includes 203541 5-wire Connector	S7800 Display	
204718A/U	Includes 203541 5-wire Connector	S7800 Display	
204718B/U	Includes 203541 5-wire Connector	S7800 Display	
204718C/U	Includes 203541 5-wire Connector	S7800 Display	
205321B/U	Includes 203541 5-wire Connector	S7800 Display	
206311/U	Carrying Case for S7800 Display	S7800 Display	
208727/U		S7810B, S7810M	
221729A/U		7800 Relay Modules	
221818A/U		S7800 Display	
221818C/U		S7800 Display	
50023821-001/U	Includes 203541 5-wire Connector	S7800 Display	
50023821-002/U	Includes 203541 5-wire Connector	S7800 Display	

SOLA™ Hydronic Control

Dimensions in inches (millimeters)

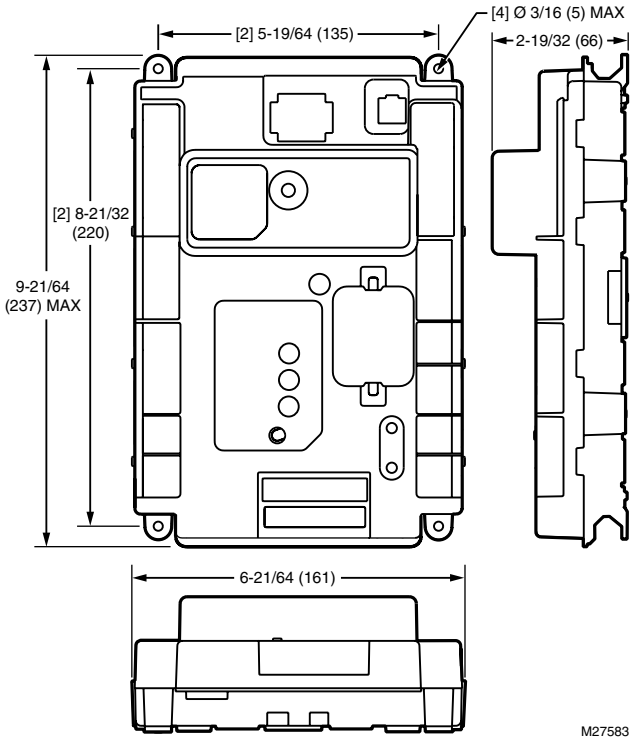

The R7910A SOLA HC is a hydronic boiler control system that provides heat control, flame supervision, circulation pump control, fan control, boiler control, and electric ignition function. It will also provide boiler status and error reporting.

- Frost Protection, Slow Start, Anti-condensate, Boiler Delta-T, Stack Limit, Boiler Limit, DHW Limit, Outlet T-Rise Limit
- Primary Flame Safeguard Control
- Internal or external spark generator.
- Analog NTC Sensor Inputs (10 kohm or 12 kohm).
- Other Analog Inputs
- PID Load Control
- Digital Inputs
- Digital Outputs
- Analog Outputs
- Algorithm Prioritization
- Two Temperature Loops of Control (CH and DHW)
- High Limit Control-CH, DHW, & Stack (Meets UL 353) using dual 10 kohm NTC sensors.
- Fifteen Item Fault Code History including equipment status at time of lockout
- Fifteen Item Alert Code Status including equipment status at time of internal alerts
- 24 Vac Device Power
- 24 or 120 Vac Digital I/O models available.
- Flame Signal test jacks (Vdc)
- Three Status LEDs.
- UV or Flame rod Flame Sensing.

Application: Hydronic
Frequency: 50-60 Hz ± 5%
Approximate, Dimensions: 9 21/64 in. x 6 21/64 in. x 2 19/32 in. (237 mm x 161 mm x 66 mm)
Comments: Includes Programmable features
Approvals, Control Safety Devices: Acceptable
Approvals, FCC: Part 15, Class B Emissions

Material Number	Enclosure Rating	Firing Rate Switch	Flame Sensor Type	Modulation Output	Voltage	Approvals, Underwriters Laboratories Inc.
R7910A1001/U	NEMA 1/IP 40		FR/UV	Yes (PWM); Yes (4-20 mA); Yes (0-10 Vdc)	24 Vac Operating; 24 Vac Load	UL, cUL: Component Recognized: File Number MH20613 (MCCZ)
R7910A1019/U	NEMA 1/IP 40	High Fire Switch; Low Fire Switch	FR/UV	Yes (PWM); Yes (4-20 mA); Yes (0-10 Vdc)	24 Vac Operating; 120 Vac Load	UL, cUL: Component Recognized: File Number MH20613 (MCCZ)
R7910A1027/U	NEMA 1/IP 40		FR/UV	Yes (PWM); Yes (4-20 mA); Yes (0-10 Vdc)	24 Vac Operating; 120 Vac Load	UL, cUL: Component Recognized: File Number MH20613 (MCCZ)
R7910A1084/U	NEMA 1/IP 40		FR	Yes (PWM); Yes (4-20 mA); Yes (0-10 Vdc)	24 Vac Operating; 24 Vac Load	UL, cUL: Component Recognized: File Number MH20613 (MCCZ)
R7910A1118/U	NEMA I/IP 40		FR, High Energy Spark	Yes (PWM)	24 Vac Operating; 24 Vac Load	UL, cUL Component File No. MH20613 (MCCZ)

SOLA™ Steam Control

Dimensions in inches (millimeters)

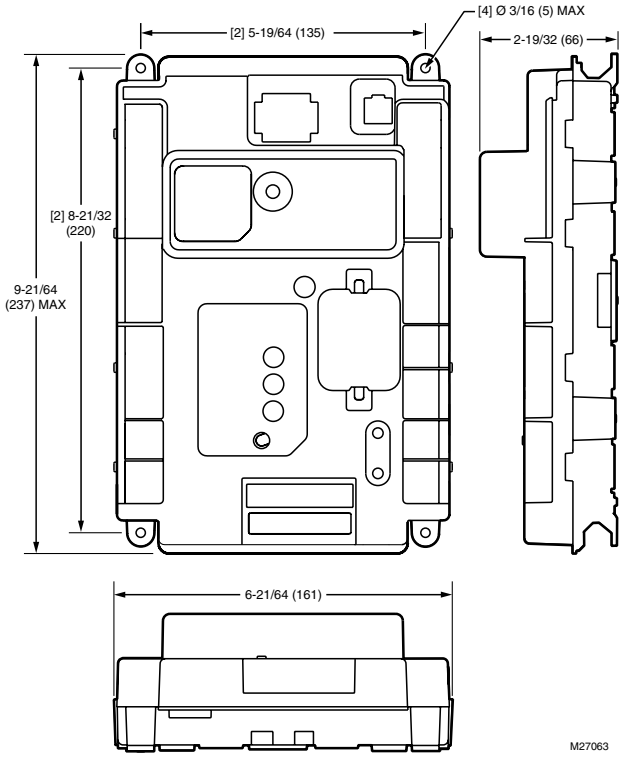

The R7911A SOLA SC is a steam boiler control system that provides heat control, flame supervision, fan control, boiler control, and electric ignition function. It will also provide boiler status and error reporting.

- Slow Start, Stack Limit, Boiler Limit
- Primary Flame Safeguard Control
- Internal or external spark generator.
- Analog Stack Temp NTC Sensor Inputs (10kohm or 12kohm).
- Other Analog Inputs
- PID Load Control
- Digital Inputs
- Digital Outputs
- Analog Outputs
- Algorithm Prioritization
- High Limit Control - Stack (Meets UL 353) using dual 10 kohm NTC sensors.
- Fifteen Item Fault Code History including equipment status at time of lockout
- Fifteen Item Alert Code Status including equipment status at time of internal alerts
- 24 Vac Device Power
- 24 or 120 Vac Digital I/O models available.
- Flame Signal test jacks (Vdc)
- Three Status LEDs.
- UV or Flame rod Flame Sensing.

Application: Steam
Frequency: 50-60 Hz ± 5%
Approximate, Dimensions: 9 21/64 in. x 6 21/64 in. x 2 19/32 in. (237 mm x 161 mm x 66 mm)
Comments: Includes Programmable features
Approvals, Control Safety Devices: Acceptable
Approvals, FCC: Part 15, Class B Emissions
Approvals, Underwriters Laboratories Inc.: UL, cUL: Component Recognized: File Number MH20613 (MCCZ)

Material Number	Enclosure Rating	Firing Rate Switch	Flame Sensor Type	Modulation Output	Voltage
R7911A1000/U	NEMA 1/IP 40		FR/UV	Yes (PWM); Yes (4-20 mA); Yes (0-10 Vdc)	24 Vac Operating; 120 Vac Load
R7911A1026/U	NEMA 1/IP 40	High Fire Switch; Low Fire Switch	FR/UV	No (PWM); Yes (4-20 mA); Yes (0-10 Vdc)	24 Vac Operating; 120 Vac Load

S7910 SOLA™ Keyboard Display

Dimensions in inches (millimeters)

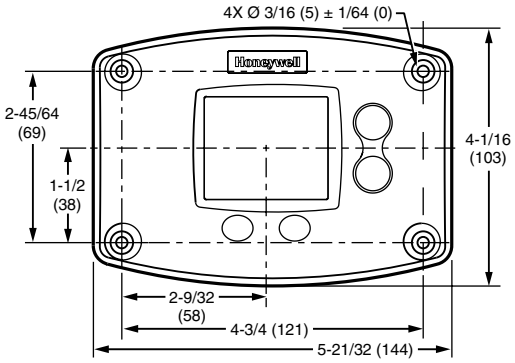

NOTE: STICKS OUT BACK 1/4 INCH (6). M27094

The S7910 Local Keyboard display interface provides setpoint and control adjustments to parameters of the R7910 SOLA Hydronic Control. The S7910 includes four function buttons, and all data is displayed on an LCD with backlight.

- Burner control state, sequence
- Rate control manual adjustment
- Lockout code
- Alert and Hold Reason
- CH, CH TOD, DHW, and DHW TOD setpoints
- Communication interface with R7910.
- First out and system status and diagnostics provided through the LCD.
- Local communication of operation and fault information.
- Control DHW, Inlet, Outlet, Delta T (Outlet-Inlet), and Stack Temperatures
- Set-up
- Diagnostics
- Blue, includes (future feature: TOD), only “talks” to Commercial R7910A, Flame Signal Vdc, pilot hold function, screw mounting

Ambient Temperature Range: 32°F to 120°F (0°C to 49°C)
Shipping and Storage Temperature Range: -60°F to +150°F (-51°C to +66°C)
Approximate, Dimensions: 4-1/6 in. high x 5-21/32 in. wide (103 mm high x 144 mm wide)
Operating Humidity Range (% RH): 85% relative humidity continuous, noncondensing
Weight: 4 oz (124 g)
Approvals, FCC: Part 15, Class B emissions.
Approvals, Underwriters Laboratories Inc.: UL, cUL: Component Recognized: File Number MH20613 (MCCZ)

Material Number	Electrical Ratings	Vibration	Description	Used With
S7910A1008/U	24 VAC powered from R7910A	0.5 G environment	Keyboard Display Module	R7910

S7999D SOLA™ System Operator Interface

The S7999D can be used to monitor an individual boiler and also used for multiple boiler applications in a lead/lag arrangement. It consists of 2 RS485 ports and a USB port. The S7999D display can be flush front or mounted behind in a panel cutout. Wiring connections are through a removable 8-pin wiring connector.

- Individual boiler status, configuration, history and diagnostics
- Allows configuration and monitoring of the Sola Controls (R7910 Hydronic Controls or R7911 Steam Control) burner control sequence, flame signal, diagnostics, historical files, and faults
- Allows switching view between multiple boilers and lead-lag master/slaves
- Real-time data trending analysis and transferring saved trend data to Excel spreadsheet
- 7” 800 x 480, 24 bit high resolution color LCD touch screen for clarity
- Audio output with integral speaker for sound output.
- Adjustable backlight control
- Real time clock with coin-cell battery back-up (CR2032)
- Volume control
- Screen Capture function to capture screen images
- USB port for file transfers and software updates
- 2 RS-485 (COM1 & 2) ports for Modbus™ interface to Sola controls and BAS Gateway.
- Windows® CE 6.0 Operating System
- 8-pin connector, back-up battery and mounting hardware are provided

Application: Interface Display
Frequency: 50-60 Hz ± 5%
Ambient Temperature Range: 14°F to 122°F (-10°C to 50°C)
Shipping and Storage Temperature Range: -13°F to 155°F (-25°C to 60°C)
Approximate, Dimensions: 9-13/32 in. wide x 6-21/32 in. high x 1-9/16 in. deep (239 mm wide x 169 mm high x 40 mm deep)
Operating Humidity Range (% RH): 85% RH continuous, non-condensing
Comments: Black Plastic Border
Approvals, FCC: FCC Part 15, Class A digital device
Approvals, Canadian Underwriters Inc.: Component Recognized: File Number MH20613 (MCCZ)
Approvals, Underwriters Laboratories Inc.: Component Recognized: File Number MH20613 (MCCZ)

Material Number	Voltage	Description	Used With
S7999D1006/U	24 Vac	System Operator Interface with Black Plastic Border	R7910/R7911

PM7910 Program Module

The PM7910 Program Module is an optional plug-in for the R7910 SOLA HC and R7911 Sola SC. From the system level the S7999 System Operator Interface can direct the R7910/R7911 to transfer or retrieve parameter information with the Program Module.

- Can be removed or installed while the R7910 or R7911 is powered.
- Facilitate multiple controller setups.
- Backup and restore the R7910 programmable data including:
  — Non-safety parameter values — Parameter Control Blocks (information on how the parameter values may be modified.)

Material Number	Application	Comments
PM7910A1013/U	Support backup and restore	Indicator LEDs - One (Status LED) Blinking LED indicated the Program Module is properly seated and powered from the R7910/R7911

SOLA™ Accessories or Parts

Application: Single element sensor with 6" leadwire with socket.

Material Number	Application
32003971-002/U	10K Ohm Single element sensor with 6" Leadwire with Socket
32003971-003/U	10K Ohm Single element sensor with 42" leadwires, includes wire nuts (2), #8 mounting screws (3), anchors (2), sensor clip (1), tie strap (2)
50001464-006/U	10K Ohm Dual Element Sensor with 6" leadwires with Female Socket
50001464-007/U	10K Ohm Dual Element Sensor with 42" leadwires without connector
50032893-001/U	Bag of connectors for R7910 and R7911 Controllers

R7999A ControLinks™ Fuel Air Controller

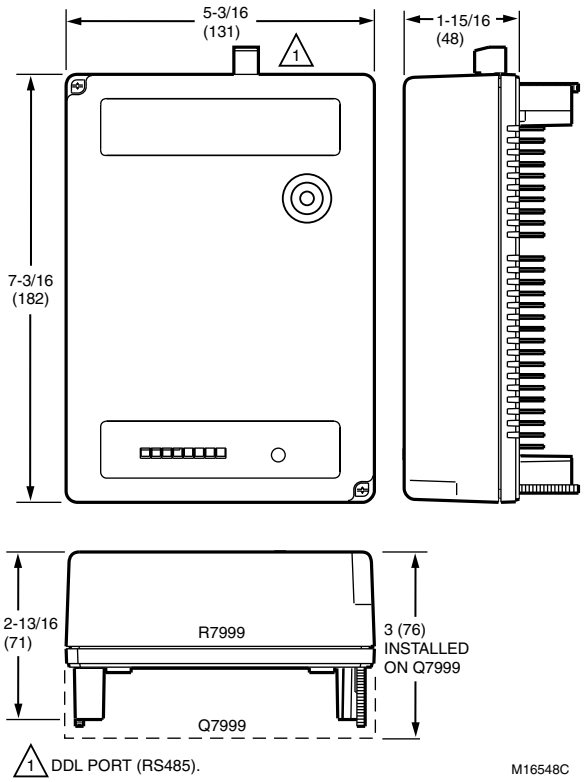

Uses microprocessor-based technology to control the ML7999 Universal Parallel Positioning Actuators. This represents a value added replacement of mechanical cam and linkage assembly controlling the relationship between fuel, airflow and flue gas recirculation (if used) on a power burner. The ControLinks Fuel Air Control System consists of the R7999 Fuel Air Controller, Q7999 Wiring Subbase, ML7999 Universal Parallel Positioning Actuator and ZM7999 Configuration Software. The R7999, with one communications port, provides communications capabilities similar to those found in the 7800 SERIES controls.

- Fast burner setup via PC or laptop
- Fuel, air, FGR profile download capability
- Two independent fuel profiles with or without FGR
- 7 to 24 point profiles
- Programmable behaviors of all actuators during Purge and Standby
- Programmable behavior of non-selected fuel actuator
- Independent light off and minimum modulation positions
- Wide power voltage input range (100 to 120 Vac, 50/60 Hz Auto/Manual input)
- Manual mode firing rate input
- Pluggable controller to wiring subbase
- Multipurpose communications port
- Field-configurable device
- Integrated boiler shock protection algorithms: Water temperature low fire hold
- Stack temperature low fire hold. FGR and low fire hold
- Selectable FGR hold based on stack temperature
- Programmable behavior of FGR actuator during purge
- Maximum modulation limit capability
- Remote reset input
- Automated actuator endpoint seeking process
- CSD-1 and NFPA acceptable

Voltage: 100 to 120 Vac
Vibration: 0.0 to 0.5g continuous
Shipping and Storage Temperature Range: -40°F to +140°F (-40°C to +60°C)
Approvals, Underwriters Laboratories Inc.: Listed: Report No. MH17367
Operating Humidity Range (% RH): 90% RH maximum, non-condensing

Replacement Parts:
32002515-001/U – 3 pin electrical connector, for R7999

Material Number	Frequency	Description
R7999A1005/U	50 Hz; 60 Hz	Fuel Air Ratio Controller, 100 to 120 Vac, 50/60 Hz.

S7999 ControLinks™ System Display

With the S7999. Each burner control, fuel/air ratio control, expanded annunciator other Modbus devices present on the burner system can be viewed individually to determine its status.

- Color (7" diagonal). Touch Screen User Interface
- Flush Mounting
- Allows setup and monitoring of R7999 ControLinks
- Two RS485 and one USB communication ports
- Screen saver, contrast control and volume control
- Modbus communication allows monitoring up to 99 different controls
- Allows Programmable Expanded Annunciator terminal naming
- Allows R7999 ControLinks EEPROM backup and restore
- Battery backup prevents losing date and time

Application: Interface Display
Temperature Range: Ambient - 14°F to 122°F (Ambient - -10°C to 50°C)
Shipping and Storage Temperature Range: -13°F to 155°F (-25°C to 60°C)

Approvals, Underwriters Laboratories Inc.: Component Listed
Approvals, FCC: FCC Part 15, Class A digital device
Used With: R7999
Operating Humidity Range (% RH): 85% RH continuous, non-condensing

Material Number	Voltage	Description
S7999D1048/U	24 Vac	S7999D System Display for R7999 ControLinks Configuration and System Monitoring

Q7999A ControLinks™ Fuel Air Control Wiring Subbase

Provides terminals for field wiring for the R7999A ControLinks™ Fuel Air Controller. Terminals on the R7999A, B Controller engage the Q7999 contacts to make electrical connections. The Q7999A Subbase is panel-mounted.

- Quick-mount wiring subbase for R7999A, B Fuel Air Ratio Controllers.
- Allows wiring of control system before installation of controller.
- Panel-mounted.
- NEMA 1 enclosure.

Vibration: 0.0 to 0.5g continuous
Shipping and Storage Temperature Range: -40°F to +150°F (-40°C to +65°C)
Approvals, Underwriters Laboratories Inc.: Listed: Report No. MH17367

Operating Humidity Range (% RH): 5 to 95% RH, non-condensing
Weight oz. (k): 10 oz (0.28 kg)

Material Number	Voltage	Frequency	Description
Q7999A1006/U	100 to 120 Vac	50 Hz; 60 Hz	Fuel Air Ratio Controller Wiring Subbase
Q7999A1014/U	100 to 120 Vac	50 Hz; 60 Hz	Fuel Air Ratio Controller Wiring Subbase

ML7999A Universal Parallel-Positioning Actuator

ML7294 Non-Spring Return Direct Coupled Actuators control dampers or valves in HVAC applications. The ML7294 Non-Spring Return DCA accepts a current or voltage signal from an electronic controller to position a damper or valve.

- Password protected using eight-digit hexadecimal identification signal
- Separate wiring compartment between line voltage power wiring and low voltage control
- Couples directly to a 1/2-in. shaft with no additional parts required; couples directly to 5/16-in. and 3/8-in. shafts using self-centering shaft reduction accessories
- Shaft coupler assembly available for shafts larger than 1/2-in.
- Bracket accessory kit available for mounting to Honeywell V51 butterfly gas valves
- Visual indication of actuator position
- NEMA 2
- IF54 with weatherproof kit

Vibration: 0.0 to 0.5g continuous
Shipping and Storage Temperature Range: -40°F to +150°F (-40°C to +65°C)
Approvals, Underwriters Laboratories Inc.: Meets UL873
Approvals, CSA: Certified

Operating Humidity Range (% RH): 5 to 95% RH, non-condensing
Approvals, CE: Certified

Material Number	Voltage	Frequency	Description
ML7999A2001/U	15 VA, 100 to 240 Vac	50 Hz; 60 Hz	Universal Parallel-Positioning Actuator. Medium torque electronic actuator with a precision feedback potentiometer and integral power supply capable of direct line voltage connection. Must be used with a Series 2 R7999.

ML7999B Universal Direct Coupled Actuator

Honeywell ML7999B universal direct coupled actuator provides 100 lb-in. torque, 4 to 20 mA control input to control combustion air dampers and modulation valves. Includes precision drive shaft control and integral power supply.

- Separate wiring compartment between line voltage power wiring and low voltage control
- Programmable actuator stroke against 4-20 mA input
- Couples directly to 1/2-in. shaft with no additional parts required; couples directly to 5/16- and 3/8-in. shafts using available self-centering shaft reduction accessories
- Shaft coupler assembly available for shafts larger than 1/2-in.
- Bracket accessory kit available for mounting to Honeywell V51 butterfly gas valves
- Visual indication of actuator position
- NEMA 2
- IF54 with weatherproof kit

Dimensions in inches (millimeters)

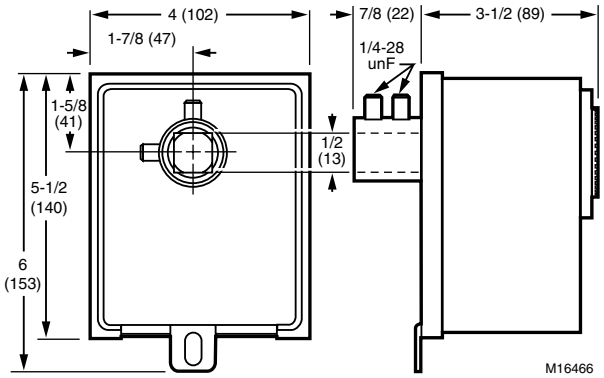

Vibration: 0.0 to 0.5g continuous
Shipping and Storage Temperature Range: -40°F to +150°F (-40°C to +65°C)
Approvals, Underwriters Laboratories Inc.: Meets UL873
Approvals, CSA: Certified
Operating Humidity Range (% RH): 5 to 95% RH, non-condensing
Approvals, CE: Certified

Accessories:
32002935-001/U – Weatherproofing kit for actuator, ML7999 ControLinks (NEMA 3).

Material Number	Voltage	Frequency	Description
ML7999B1002/U	15 VA, 100 to 240 Vac	50 Hz; 60 Hz	Universal Parallel-Positioning Actuator. Medium torque electronic actuator with a precision feedback potentiometer and integral power supply capable of direct line voltage connection.

ML7999 Accessories

Material Number	Description
201391/U	Shaft Adapter for 3/8 in. round or square valve shaft
32002935-001/U	Weatherproofing kit for actuator, ML7999 ControLinks (NEMA 3).
32003167-001/U	Shaft Adapter for 5/16 in. round or square shaft
32003168-001/U	Shaft Adapter for 3/4 in. round shaft only
32003168-002/U	Shaft Adapter for 5/8 in. round shaft only
32003168-003/U	Shaft Adapter for 9/16 in. round shaft only
32003396-002/U	V51E Mounting Kit for ML7999 Actuator (2-1/2, 3 & 4 in. valves). Includes angle bracket, mounting bracket, screws, nuts and washers, and instructions.
50036542-001/U	Auxiliary Switch Mounting Plate for ML7999B for 201052A or 201052B Auxiliary switch assembly

ZM7999A ControLinks Fuel Air Control System Configuration Software

The ZM7999 Software Configuration Tool reduces burner setup time by letting you create an R7999 Controlinks burner modulation curve. The software assists you through the commissioning process and when it's complete, you can monitor the system real-time.

- Minimum Hardware Requirements: PC or laptop with a Pentium© processor.
- Windows® 95 or Windows® 98.
- 16 MB of RAM.
- 1G hard drive with 100 MB of free memory.
- 4X (or higher) CD-ROM drive.
- Mouse.
- Super VGA color monitor (800 x 600 resolution suggested).

Material Number	Description	Used With
ZM7999A1006/U	Configuration Software	R7999

ControLinks Accessories

Material Number	Description	Used With
32002515-001/U	3 pin electrical connector, for R7999	R7999
50020034-001/U	9 pin electrical connector, for S7999B	S7999B

QM4520A Data Acquisition Module

The QM4520A RS-232 to RS485 Converter allows a PC to communicate with multiple devices on a single bus, over greater distances.

- Mount on DIN rail, panel or in a piggyback stack.
- Uses unregulated power between +10 Vdc and +30 Vdc.
- Transmit data on single twisted pair (RS-485).
- Plug-in screw terminal blocks assure simple installation, maintenance and modification.
- Clean and reliable communications assured by noise-suppressing special circuitry.
- RS-485 communications reduce the number of required cables, connectors and conditioners.
- Modules can be remotely mounted up to 4,000 ft (1.2 km) away.

Electrical Connections: Plug-in screw terminal block.
Ambient Temperature Range: 32°F to 158°F (0°C to 70°C)
Voltage: Unregulated +10 Vdc to +30 Vdc - Power supply not provided.
Operating Humidity Range (% RH): 5 to 95% RH, non-condensing
Approximate, Dimensions: 2 11/32 in. x 4 13/16 in. x 1 3/16 in. (60 mm x 122 mm x 30 mm)

Material Number	Connection Type	Description	Used With
QM4520A1004/U	RS-232 (4-wire: TX, RX, RTS, GND) (Null modem may be required.)	RS-232 to RS-485 Converter	ZM7850 or ZM7999 software

7800 SERIES and R7140 Flame Signal Amplifiers

Solid state plug-in amplifiers that respond to flame detector inputs to indicate the presence of flame when used with 7800 SERIES relay modules.

- Flame failure response time of 0.8 or 3.0 seconds (1.0 or 2.0 for CE approved devices).
- Flame signal strength ranges from 0.0 to 5.0 Vdc.
- Plug into 7800 relay module through printed circuit board edge connector keyed for proper orientation.
- Flame signal test jacks to measure amplifier flame signal voltage.
- Color-coded labels identify flame detection type.
- Dynamic Self-Check Amplifier test the detectors and all electronic components in the flame detection system.
- Ampli-check tests the amplifier and 7800 SERIES Relay.
- None (standard) is just tested at normal system startup.
- 7800 SERIES relay module locks out on safety shutdown with flame detection system failure.
- Compatible with existing Honeywell flame detectors (order separately).

Approvals, Underwriters Laboratories Inc.: Listed: File No. MP268, Guide No. MCCZ
Approvals, CSA: Certified: File No. LR95329-3
Approvals, Swiss RE: Acceptable
Approvals, Factory Mutual: Approved: Report No. 1V9A0.AF

Material Number	Type	Flame Failure Response Time (sec)	Self Checking	Use With Primary Safety Control	Use With Flame Sensor	Comments
R7824C1002/U	Ultraviolet	3.0 sec	Dynamic Self-Check	RM7824	C7024E, F Flame Detector	Color: Green
R7847A1025/U	Rectification	0.8 sec or 1.0 sec	None (standard)	7800 SERIES Relay Modules	Gas: Rectifying Flame Rods C7004, C7005, C7007, C7008, C7009, Q179	Color: Green
R7847A1033/U	Rectification	2.0 sec or 3.0 sec	None (standard)	7800 SERIES Relay Modules	Gas: Rectifying Flame Rods C7004, C7005, C7007, C7008, C7009, Q179; Gas, oil, coal: Ultraviolet Flame Sensor C7012A, C	Color: Green
R7847A1074/U	Rectification	0.8 sec or 1.0 sec	None (standard)	7800 SERIES Relay Modules	Gas: Rectifying Flame Rods C7004, 5, 7, 8, or 9, Q179 for impedance matching for leadwire runs > 50' or Ultraviolet Flame Sensor C7012A, C	Color: Green
R7847A1082/U	Rectification	2.0 sec or 3.0 sec	None (standard)	7800 SERIES Relay Modules	Gas: Rectifying Flame Rods C7004, 5, 7, 8, or 9, Q179 for impedance matching for leadwire runs > 50' or Ultraviolet Flame Sensor C7012A, C	Color: Green
R7847B1023/U	Rectification	0.8 sec or 1.0 sec	Ampli-Check	7800 SERIES Relay Modules	Gas: Rectifying Flame Rods C7004, C7005, C7007, C7008, C7009, Q179	Color: Green
R7847B1031/U	Rectification	2.0 sec or 3.0 sec	Ampli-Check	7800 SERIES Relay Modules	Gas: Rectifying Flame Rods C7004, C7005, C7007, C7008, C7009, Q179; Gas, oil, coal: Ultraviolet Flame Sensor C7012A, C	Color: Green
R7847B1064/U	Rectification	0.8 sec or 1.0 sec	Ampli-Check	7800 SERIES Relay Modules	Gas: Rectifying Flame Rods C7004, 5, 7, 8, or 9, Q179 for impedance matching for leadwire runs > 50' or Ultraviolet Flame Sensor C7012A, C	Color: Green
R7847B1072/U	Rectification	2.0 sec or 3.0 sec	Ampli-Check	7800 SERIES Relay Modules	Gas: Rectifying Flame Rods C7004, 5, 7, 8, or 9, Q179 for impedance matching for leadwire runs > 50' or Ultraviolet Flame Sensor C7012A, C	Color: Green
R7847C1005/U	Rectification	2.0 sec or 3.0 sec	Dynamic Self-Check	7800 SERIES Relay Modules	Gas, oil, coal: Ultraviolet Flame Sensor C7012E, F	Color: Green
R7848A1008/U	Infrared	2.0 sec or 3.0 sec	None (standard)	7800 SERIES Relay Modules	Gas, oil, coal: Infrared (lead sulfide) C7015	Color: Red
R7848B1006/U	Infrared	2.0 sec or 3.0 sec	Ampli-Check	7800 SERIES Relay Modules	Gas, oil, coal: Infrared (lead sulfide) C7015	Color: Red
R7849A1015/U	Ultraviolet	0.8 sec or 1.0 sec	None (standard)	7800 SERIES Relay Modules	Gas, Oil: Minipeeper C7027A, C7035A, C7044	Color: Purple
R7849A1023/U	Ultraviolet	2.0 sec or 3.0 sec	None (standard)	7800 SERIES Relay Modules	Gas, Oil: Minipeeper C7027A, C7035A, C7044	Color: Purple
R7849B1013/U	Ultraviolet	0.8 sec or 1.0 sec	Ampli-Check	7800 SERIES Relay Modules	Gas, Oil: Minipeeper C7027A, C7035A, C7044	Color: Purple
R7849B1021/U	Ultraviolet	2.0 sec or 3.0 sec	Ampli-Check	7800 SERIES Relay Modules	Gas, Oil: Minipeeper C7027A, C7035A, C7044	Color: Purple
R7851B1000/U	Optical	2.0 sec or 3.0 sec	Ampli-Check	7800 SERIES Relay Modules	Gas, Oil, Coal: Optical (UV, Visible Light) C7927, C7962	Color: White
R7851B1018/U	Optical	0.8 sec or 1.0 sec	Ampli-Check	7800 SERIES Relay Modules	Gas, Oil, Coal: Optical (UV, Visible Light) C7927, C7962	Color: White
R7851C1008/U	Optical	2.0 sec or 3.0 sec	Dynamic Self-Check	7800 SERIES Relay Modules	Gas, oil, coal: Optical (UV only) C7961E, F	Color: White
R7852A1001/U	Infrared	2.0 sec or 3.0 sec	None (standard)	7800 SERIES Relay Modules	Gas, oil, coal: Infrared (lead sulfide) C7915	Color: Red/White
R7852B1009/U	Infrared	2.0 sec or 3.0 sec	Ampli-Check	7800 SERIES Relay Modules	Gas, oil, coal: Infrared (lead sulfide) C7915	Color: Red/White
R7861A1026/U	Ultraviolet	2.0 sec or 3.0 sec	Dynamic Self-Check	7800 SERIES Relay Modules	Gas, oil, coal: Ultraviolet Flame Sensor C7061	Color: Purple
R7861A1034/U	Ultraviolet	0.8 sec or 1.0 sec	Dynamic Self-Check	7800 SERIES Relay Modules	Gas, oil, coal: Ultraviolet Flame Sensor C7061	Color: Purple
R7886A1001/U	Ultraviolet	2.0 sec or 3.0 sec	Dynamic Self-Check	7800 SERIES Relay Modules	Gas, oil, coal: Adjustable Sensitivity Ultraviolet Flame Sensor C7076	Color: Blue

R7247; R7248; R7249; R7476 Flame Amplifiers

Solid state plug-in units respond to flame detector signal and indicate presence of flame.

- Use with BC7000; R4140; R4075C, D, E; R4138C, D Flame Safeguard controls and appropriate flame detector and FSP5075A1, FSP5075A3 Flame Amplifier Modules.

Use With Primary Safety Control: R4140; BC7000; R4075C, D, E; R4138C, D; FSP5075
Approvals, Factory Mutual: Approved: Report No. 24181.01

Material Number	Type	Flame Failure Response Time (sec)	Self Checking	Use With Flame Sensor	Approvals, Underwriters Laboratories Inc.	Approvals, CSA	Approvals, Control Safety Devices	Approvals, Swiss RE	Comments
R7247B1003/U	Rectification	2 to 4 sec	Ampli-Check	Gas: Rectifying Flame Rods C7004, C7005, C7007, C7008, C7009, Q179; Gas, oil, coal: Ultraviolet Flame Sensor C7012A, C	Listed: File No. MP268, Guide No. MCCZ2	Certified: File No. LR1620, Guide No. 140-A-2	Acceptable (CSD-1)	Acceptable	Color: Green
R7247C1001/U	Rectification	2 to 4 sec	Dynamic Self-Check	Gas, oil, coal: Ultraviolet Flame Sensor C7012E, F	Listed: File No. MP268, Guide No. MCCZ2	Certified: File No. LR1620, Guide No. 140-A-2	Acceptable (CSD-1)	Acceptable	Color: Green
R7248A1004/U	Infrared	2 to 4 sec	None (standard)	Gas, oil, coal: Infrared (lead sulfide) C7015	Listed: File No. MP268, Guide No. MCCZ	Certified: File No. LR1620, Guide No. 140-A-2 (gas), 300-I-0.2 (oil)	Acceptable (CSD-1)	Acceptable	Color: Red
R7249A1003/U	Ultraviolet	2 to 4 sec	None (standard)	Gas, oil, coal: Ultraviolet (Minipeeper) C7027, C7035	Listed: File No. MP268, Guide No. MCCZ2	Certified: File No. LR1620, Guide No. 140-A-2	Acceptable (CSD-1)	Acceptable	Color: Purple
R7476A1007/U	Ultraviolet	2 to 4 sec	Dynamic Self-Check	Gas, oil, coal: Adjustable Sensitivity Ultraviolet Flame Sensor C7076	Listed: File No. MP268, Guide No. MCCZ	Certified: File No. LR1620, Guide No. 140-A-2 (gas), 300-I-0.2 (oil)			Color: Blue
R7476A1015/U	Ultraviolet	2 sec max.	Dynamic Self-Check	Gas, oil, coal: Adjustable Sensitivity Ultraviolet Flame Sensor C7076	Listed: File No. MP268, Guide No. MCCZ	Certified: File No. LR1620, Guide No. 140-A-2 (gas), 300-I-0.2 (oil)			Color: Blue

Flame Amplifier Accessories

Material Number	Description	Used With
32005301-001/U	T Filter for Rectification Applications	R7847, R7247

C7007 Flame Rod Holder

Used to apply flame rod in gas-fired system controlled by rectification type flame safeguard control.
- Use with pressurized fire boxes.
- Hold flame rods firmly over the pilot or burner with a chuck and setscrew arrangement.
- Provide electrical connection through a terminal screw.
- Allow ventilation to cool the unit or to minimize soot deposit through a 1/2 in.
- NPT tapping.
- Mount easily with sleeve or thread type mounting adapters, and a straight or angle body.

Type: Flame Rod
Application: Gas fired pilot or gas fired system.
Approximate, Dimensions: 1 15/16 in. high x 2 3/16 in. diameter x 3 3/16 in. long (49 mm high x 56 mm diameter x 81 mm long)
Approvals, Underwriters Laboratories Inc.: Listed: File No. MP268, Guide No. MCCZ

Approvals, CSA: Certified: File No. L95329-1
Approvals, Swiss RE: Acceptable
Approvals, Factory Mutual: Approved: Report No. 24181.03

Material Number	Electrical Connections	Mounting	Required Components	Comments	Used With
C7007A1001/U	Terminal screw	1/2 in.-14 NPT male	102709A -12 in. Flame Rod; 102709B -18 in. Flame Rod; 102709C -24 in. Flame Rod; 102709D -36 in. Flame Rod; or 102709E -48 in. Flame Rod	Holder only, order Kanthal flame rod separately.	Flame Amplifiers: R7247A, B, R7847A, B, R7257, R7289

C7008 Flame Rod Holder

Miniature "spark plug" type flame rod holder with threaded base, snap-on cover and Kanthal A-1 Flame Rod.
- Use with Honeywell Flame Safeguard controls requiring rectification-type flame detection.
- Use only with gas.
- Install with or without cover.
- Comes in several different lengths and can be cut to exact desired length.
- Uses Rajah electrical connector.

Type: Flame Rod
Application: Gas fired pilot or gas fired system.
Approximate, Dimensions: Holder: 7/8 in. diameter x 3 3/4 in. long (Holder: 22 mm diameter x 95 mm long)
Approvals, Underwriters Laboratories Inc.: Listed: File No. MP268, Guide No. MCCZ

Approvals, CSA: Certified: File No. L95329-1
Approvals, Swiss RE: Acceptable
Approvals, Factory Mutual: Approved: Report No. 24181.03

Material Number	Electrical Connections	Mounting	Includes	Used With
C7008A1000/U	Rajah electrical connector	1/4 in. NPT male	6" Flame rod and holder	Flame Amplifiers: R7247A, B, R7847A, B, R7257, R7289
C7008A1018/U	Rajah electrical connector	1/4 in. NPT male	12" Flame rod and holder	Flame Amplifiers: R7247A, B, R7847A, B, R7257, R7289
C7008A1026/U	Rajah electrical connector	1/4 in. NPT male	18" Flame rod and holder	Flame Amplifiers: R7247A, B, R7847A, B, R7257, R7289
C7008A1034/U	Rajah electrical connector	1/4 in. NPT male	24" Flame rod and holder	Flame Amplifiers: R7247A, B, R7847A, B, R7257, R7289
C7008A1174/U	Rajah electrical connector	1/4 in. NPT male	12" Flame rod and holder	Flame Amplifiers: R7247A, B, R7847A, B, R7257, R7289
C7008A1182/U	Rajah electrical connector	1/4 in. NPT male	24" Flame rod and holder	Flame Amplifiers: R7247A, B, R7847A, B, R7257, R7289

C7009 Flame Rod Holder

Subminiature "spark plug" type flame rod holder with flame rod.
- Use on industrial flame-retention gas burner nozzles.
- Works with Honeywell Flame Safeguard controls requiring rectification type flame detector.
- Mounts in areas with limited space because flame rod can be cut to desired length.
- Uses Rajah electrical connector.

Type: Flame Rod
Application: Gas fired pilot or gas fired system.
Approximate, Dimensions: Holder: 3/8 in. diameter x 2 3/8 in. long (Holder: 10 mm diameter x 60 mm long)
Approvals, Underwriters Laboratories Inc.: Listed: File No. MP268, Guide No. MCCZ
Approvals, CSA: Certified: File No. L95329-1
Approvals, Swiss RE: Acceptable
Approvals, Factory Mutual: Approved: Report No. 24181.03

Material Number	Electrical Connections	Mounting	Includes	Comments	Used With
C7009A1009/U	Rajah electrical connector	1/8 in. NPT male	Flame rod and holder	4 in. (102 mm) flame rod	Flame Amplifiers: R7247A, B, R7847A, B, R7257, R7289
C7009A1025/U	Rajah electrical connector	1/8 in. NPT male	Flame rod and holder	12 in. (305 mm) flame rod	Flame Amplifiers: R7247A, B, R7847A, B, R7257, R7289

Flame Rod Detector Accessories or Parts

Material Number	Description
102709B/U	Kanthal Flame Rod - 18 in. (.182" diameter) for C7004B, C7007A, C7011A
102709C/U	Kanthal Flame Rod - 24 in. (.182" diameter) for C7004B, C7007A, C7011A
102709D/U	Kanthal Flame Rod - 36 in. (.182" diameter) for C7004B, C7007A, C7011A
105478A/U	Kanthal Flame Rod - 6 in. (.182" diameter-threaded 6-32) for C7008
105478B/U	Kanthal Flame Rod - 12 in. (.182" diameter-threaded 6-32) for C7008
105478C/U	Kanthal Flame Rod - 18 in. (.182" diameter-threaded 6-32) for C7008
105478D/U	Kanthal Flame Rod - 24 in. (.182" diameter-threaded 6-32) for C7008

C7012 Solid State Purple Peeper® Ultraviolet Flame Detector

Solid state electronic flame detectors for use with Honeywell Flame Safeguard controls and amplifiers. Sense ultraviolet radiation produced by combustion of gas, oil, coal or other fuels.

- Mount horizontally, vertically or at any angle in between.
- Provide quick electrical hookup with threaded conduit fitting and color-coded leadwires.
- Reduced nuisance shutdowns by wiring two in parallel.
- C7012E1278 5 pin Brad Harrison type (formally 41307N) mating connector not supplied nor available through Honeywell.
- C7012A, E meets NEMA 4 standards with viewing window rated to 20 psi.
- C7012C, F has an explosion-proof housing for use in hazardous atmospheres with a viewing window rated to 100 psi.

Type: Ultraviolet, Purple Peeper
Application: Gas, Oil or Coal fired burners
Lead Length: 96 in. (2438 mm)
Power Consumption: 2.5 W
Approvals, CSA: Certified: Master Report LR95329-1
Approvals, Swiss RE: Acceptable
Approvals, Factory Mutual: Approved: Report No. 14740.01

Material Number	Frequency	Weight	NEMA Rating	Electrical Connections	Mounting	Electrical Ratings	Ambient Temperature Range	Approvals, Underwriters Laboratories Inc.	Approvals, Others	Includes	Used With
C7012A1145/U	50 Hz; 60 Hz	4.25 lb (1.9 kg)	NEMA 4	4 NEC Class 1 Color-coded lead wires.	3/4 in. NPT	120 Vac	25°F to 175°F (-4°C to +79°C)	Listed: File No. MP268, Guide No. MCCZ		Cast case and cover	Flame Amplifiers: R7247A, R7847A, R7257; Flame Amplifiers: R7247A, B; R7847A, B; R7257
C7012A1152/U	50 Hz; 60 Hz	4.25 lb (1.9 kg)	NEMA 4	4 NEC Class 1 Color-coded lead wires.	1 in. NPT	120 Vac	25°F to 175°F (-4°C to +79°C)	Listed: File No. MP268, Guide No. MCCZ		Cast case and cover	Flame Amplifiers: R7247A, B; R7847A, B; R7257
C7012A1160/U	50 Hz; 60 Hz	4.25 lb (1.9 kg)	NEMA 4	4 NEC Class 1 Color-coded lead wires.	1 in. NPT	120 Vac	-40°F to +175°F (-40°C to +79°C)	Listed: File No. MP268, Guide No. MCCZ		Cast case and cover	Flame Amplifiers: R7247A, B; R7847A, B; R7257
C7012A1186/U	50 Hz; 60 Hz	4.25 lb (1.9 kg)	NEMA 4	4 NEC Class 1 Color-coded lead wires.	3/4 in. NPT	208 Vac	25°F to 175°F (-4°C to +79°C)	Listed: File No. MP268, Guide No. MCCZ		Cast case and cover	Flame Amplifiers: R7247A, B; R7847A, B; R7257
C7012A1194/U	50 Hz; 60 Hz	4.25 lb (1.9 kg)	NEMA 4	4 NEC Class 1 Color-coded lead wires.	3/4 in. NPT	240 Vac	25°F to 175°F (-4°C to +79°C)	Listed: File No. MP268, Guide No. MCCZ		Cast case and cover	Flame Amplifiers: R7247A, B; R7847A, B; R7257
C7012A1202/U	50 Hz; 60 Hz	4.25 lb (1.9 kg)	NEMA 4	4 NEC Class 1 Color-coded lead wires.	3/4 in. NPT	100 Vac	25°F to 175°F (-4°C to +79°C)	Listed: File No. MP268, Guide No. MCCZ		Cast case and cover	Flame Amplifiers: R7247A, R7847A, R7257
C7012A1210/U	50 Hz; 60 Hz	4.25 lb (1.9 kg)	NEMA 4	4 NEC Class 1 Color-coded lead wires.	3/4 in. NPT	120 Vac	25°F to 175°F (-4°C to +79°C)	Listed: File No. MP268, Guide No. MCCZ		Cast case and cover	Flame Amplifiers: R7247A, R7847A, R7257
C7012C1042/U	50 Hz; 60 Hz	14.5 lb (6.6 kg)	Explosion Proof	4 NEC Class 1 Color-coded lead wires.	1 in. NPT	120 Vac	25°F to 175°F (-4°C to +79°C)	Listed: File No. E34649, Guide No. ZTSZ			Flame Amplifiers: R7247A, B; R7847A, B; R7257
C7012G1019/U	50 Hz	4.25 lb (1.9 kg)	NEMA 4	5 NEC Class 1 Color-coded lead wires.	3/4 in. NPT	220 Vac	25°F to 175°F (-4°C to +79°C)	Listed: File No. MP268, Guide No. MCCZ	Meets DIN Standards	Cast case and cover	Flame Amplifiers: R7247C, R7847C

Dimensiions in inches (millimeters)

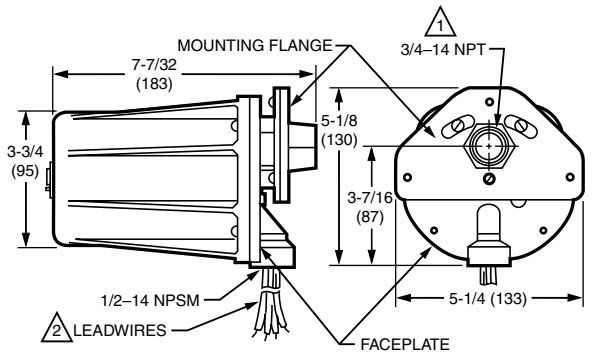

1 C7061A1046, C7061A1053: INCH NPT

2 C7061A1038 AND C7061A1046: TYPE CONNECTOR.

M10167D

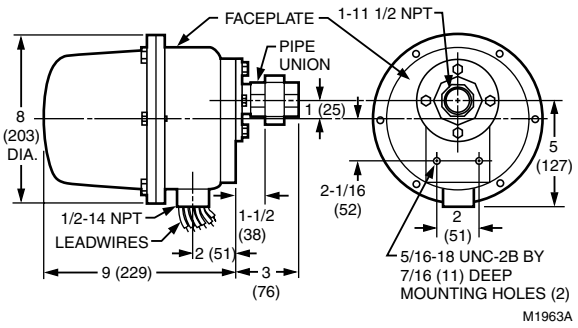

M1963A

C7012 Solid State Purple Peeper® Ultraviolet Flame Detector (Self-Checking)

Solid state electronic flame detectors for use with Honeywell Flame Safeguard controls and amplifiers. Sense ultraviolet radiation produced by combustion of gas, oil, coal or other fuels.

- Mount horizontally, vertically or at any angle in between.
- Provide quick electrical hookup with threaded conduit fitting and color-coded leadwires.
- Reduced nuisance shutdowns by wiring two in parallel.
- C7012E1278 5 pin Brad Harrison type (formally 41307N) mating connector not supplied nor available through Honeywell.
- C7012A, E meets NEMA 4 standards with viewing window rated to 20 psi.
- C7012C, F has an explosion-proof housing for use in hazardous atmospheres with a viewing window rated to 100 psi.

Type: Ultraviolet, Purple Peeper, Self-Checking
Application: Gas, Oil or Coal fired burners
Lead Length: 96 in. (2438 mm)
Power Consumption: 7.0 W
Approvals, CSA: Certified: Master Report LR95329-1
Approvals, Swiss RE: Acceptable
Approvals, Factory Mutual: Approved: Report No. 14740.01
Used With: Flame Amplifiers: R7247C, R7847C

Material Number	Frequency	Weight	NEMA Rating	Electrical Connections	Mounting	Electrical Ratings	Ambient Temperature Range	Approvals, Underwriters Laboratories Inc.	Approvals, Others	Includes
C7012E1104/U	50 Hz; 60 Hz	4.25 lb (1.9 kg)	NEMA 4	6 NEC Class 1 Color-coded lead wires.	3/4 in. NPT	120 Vac	-20°F to +175°F (-20°C to +79°C)	Listed: File No. MP268, Guide No. MCCZ		Cast case and cover
C7012E1112/U	50 Hz; 60 Hz	4.25 lb (1.9 kg)	NEMA 4	6 NEC Class 1 Color-coded lead wires.	1 in. NPT	120 Vac	-20°F to +175°F (-20°C to +79°C)	Listed: File No. MP268, Guide No. MCCZ		Cast case and cover
C7012E1120/U	50 Hz; 60 Hz	4.25 lb (1.9 kg)	NEMA 4	6 NEC Class 1 Color-coded lead wires.	1 in. NPT	120 Vac	-40°F to +175°F (-40°C to +79°C)	Listed: File No. MP268, Guide No. MCCZ		Cast case and cover
C7012E1146/U	50 Hz; 60 Hz	4.25 lb (1.9 kg)	NEMA 4	6 NEC Class 1 Color-coded lead wires.	3/4 in. NPT	208 Vac	-20°F to +175°F (-20°C to +79°C)	Listed: File No. MP268, Guide No. MCCZ		Cast case and cover, with Hot refractory tube
C7012E1153/U	50 Hz; 60 Hz	4.25 lb (1.9 kg)	NEMA 4	6 NEC Class 1 Color-coded lead wires.	3/4 in. NPT	240 Vac	-20°F to +175°F (-20°C to +79°C)	Listed: File No. MP268, Guide No. MCCZ		Cast case and cover
C7012E1187/U	50 Hz	4.25 lb (1.9 kg)	NEMA 4	6 NEC Class 1 Color-coded lead wires.	3/4 in. NPT	220 Vac	-20°F to +175°F (-20°C to +79°C)	Listed: File No. MP268, Guide No. MCCZ	DIN (Europe)	Cast case and cover
C7012E1195/U	50 Hz	4.25 lb (1.9 kg)	NEMA 4	6 NEC Class 1 Color-coded lead wires.	3/4 in. NPT	110 Vac	-20°F to +175°F (-20°C to +79°C)	Listed: File No. MP268, Guide No. MCCZ	BGC (Europe)	Cast case and cover
C7012E1203/U	50 Hz; 60 Hz	4.25 lb (1.9 kg)	NEMA 4	6 NEC Class 1 Color-coded lead wires.	3/4 in. NPT	240 Vac	-20°F to +175°F (-20°C to +79°C)	Listed: File No. MP268, Guide No. MCCZ	BGC (Europe)	Cast case and cover
C7012E1278/U	50 Hz; 60 Hz	4.25 lb (1.9 kg)	NEMA 4	Brad Harrison type number 41310 connector	1 in. NPT	120 Vac	-20°F to +175°F (-20°C to +79°C)	Listed: File No. MP268, Guide No. MCCZ		Cast case and cover
C7012F1052/U	50 Hz; 60 Hz	14.5 lb (6.6 kg)	Explosion Proof	6 NEC Class 1 Color-coded lead wires.	1 in. NPT	120 Vac	-20°F to +175°F (-20°C to +79°C)	Listed: File No. E34649, Guide No. ZTSZ		Explosion-proof, two piece, violet, cast aluminum enclosure

Dimensiions in inches (millimeters)

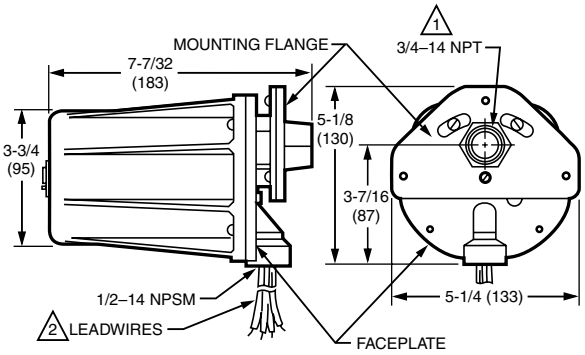

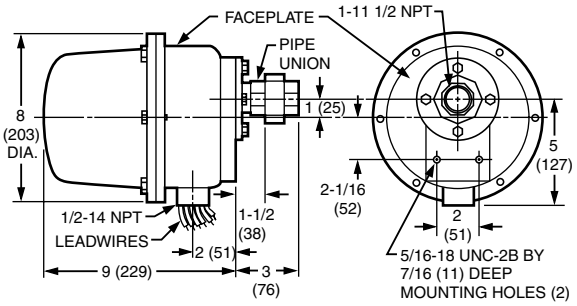

1 C7061A1046, C7061A1053: INCH NPT

2 C7061A1038 AND C7061A1046: TYPE CONNECTOR.

M10167D

C7024 Solid State Purple Peeper® Ultraviolet Flame Detector

24 Vdc solid state electronic flame detectors for sensing the ultraviolet radiation emitted by the combustion of most carbon containing fuels, such as natural gas, LP gases, and oil.

- Use with R7824C Dynamic Self-Check Flame Signal Amplifier.
- Circuitry provides low power consumption and high reliability.
- Mount horizontally, vertically or at any angle in between.
- Field-replaceable UV radiation sensing tube and quartz viewing window.
- Quick electrical installation with threaded conduit fitting and color-coded leadwires.
- Reduce nuisance shutdowns by wiring two in parallel.
- Oscillating shutter interrupts UV radiation using the R7824C amplifier.
- C7024E meets NEMA 4 standards with viewing window rated to 20 psi.
- C7024F has an explosion-proof housing for use in hazardous atmospheres with a viewing window rated to 100 psi.

Type: Ultraviolet, Purple Peeper, Self-Checking
Application: Coal fired burners; Gas fired burners; Oil fired burners
Lead Length: 96 in. (2438 mm)
Electrical Connections: Six NEC CLASS 1 color-coded leaders
Electrical Ratings: 24 Vdc
Power Consumption: 7.8 W maximum.

Ambient Temperature Range: -20°F to +175°F (-20°C to +79°C)
Approvals, CSA: Certified: Master Report LR95329-3
Used With: Flame Amplifiers: R7824C

Accessories:
190971G/U – 24 Vdc Coil and Shutter Assembly for C7024E, F; C7961

Dimensiions in inches (millimeters)

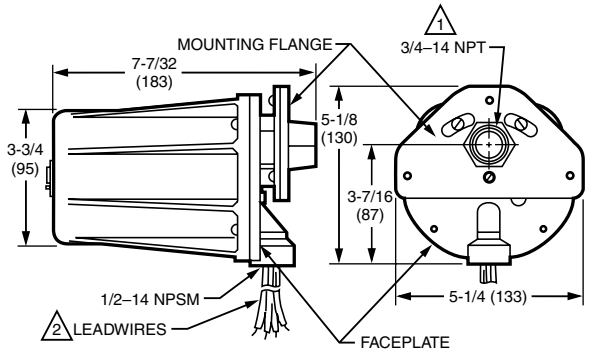

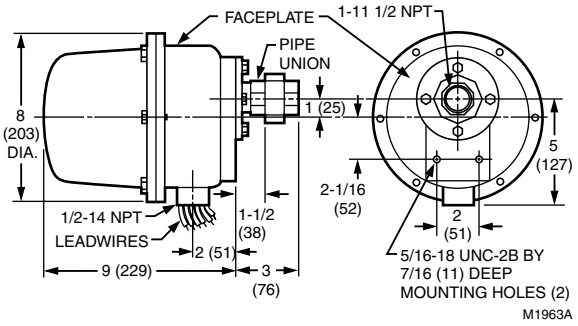

Material Number	NEMA Rating	Mounting	Approximate, Dimensions	Weight	Approvals, Underwriters Laboratories Inc.	Includes	Comments
C7024E1001/U	NEMA 4	3/4 in. NPT	5 1/4 in. diameter (includes mounting flange) x 7 7/32 in. long (133 mm diameter (includes mounting flange) x 183 mm long)	4.25 lb (1.9 kg)	Component Recognized: File No. MP268	Cast case and cover	Flame Amplifiers: R7824C
C7024F1009/U	Explosion Proof	1 in. NPT	8 in. diameter x 12 in. long (203 mm diameter x 305 mm long)	14.5 lb (6.6 kg)	Component Recognized: For use in hazardous locations; Class 1 Groups C and D; Class 2, Groups E, F and G; File no. E34649		Flame Amplifiers: R7824C

C7027; C7044 Minipeeper Ultraviolet Flame Detector

Compact Flame Detector for use with flame safeguard controls with ultraviolet amplifiers.

- Use with Honeywell Flame Safeguard primary safety controls and burners requiring ultraviolet flame detection.
- C7027 mounts on a 1/2 in. sighting pipe by using an integral collar.
- Detectors can be wired in parallel for difficult sighting applications.
- C7027 seals against pressures up to 5 psi (34.5 kPa) when correctly installed.
- Allows for blast tube mounting due to compact size.
- C7044 mounts with a two screw bracket.
- The C7044 UV sensor tube is enclosed in a stainless steel housing.
- C7044 has the capability of side or end viewing in flame monitoring applications.

Type: Ultraviolet, Minipeeper
Electrical Connections: 2 NEC Class 1 leadwires
Vibration: 0.5 G max
Approvals, Underwriters Laboratories Inc.: Listed: File No. MP268, Guide No. MCCZ
Approvals, CSA: Certified: Master Report LR95329-1
Approvals, Swiss RE: Acceptable
Approvals, Factory Mutual: Approved: Report No. 24181.03
Used With: Flame Amplifiers: R7249A, B, R7849A, B, R7749B, R7259, R7290

Material Number	Application	Lead Length	Mounting	Ambient Temperature Range	Approvals, Others	Includes	Comments
C7027A1023/U	Coal fired burners; Gas fired burners; Oil fired burners	96 in. (2438 mm)	Integral nut for 1/2 in. sighting pipe.	0°F to 215°F (-18°C to +102°C)			Detects ultraviolet radiation in flames
C7027A1031/U	Coal fired burners; Gas fired burners; Oil fired burners	96 in. (2438 mm)	Integral nut for 1/2 in. sighting pipe.	-40°F to 215°F (-40°C to 102°C)			Detects ultraviolet radiation in flames
C7027A1049/U	Coal fired burners; Gas fired burners; Oil fired burners	96 in. (2438 mm)	Integral nut for 1/2 in. sighting pipe.	0°F to 215°F (-18°C to +102°C)		1/2 in. NPT threaded spud connector.	Detects ultraviolet radiation in flames
C7027A1056/U	Coal fired burners; Gas fired burners; Oil fired burners	96 in. (2438 mm)	Integral nut for 1/2 in. sighting pipe.	0°F to 215°F (-18°C to +102°C)	DIN (Europe)		Detects ultraviolet radiation in flames
C7027A1064/U	Coal fired burners; Gas fired burners; Oil fired burners	288 in. (7315 mm)	Integral nut for 1/2 in. sighting pipe.	-40°F to 215°F (-40°C to 102°C)		1/2 in. NPT threaded spud connector.	Detects ultraviolet radiation in flames
C7027A1072/U	Coal fired burners; Gas fired burners; Oil fired burners	96 in. (2438 mm)	Integral nut for 1/2 in. sighting pipe.	-40°F to 215°F (-40°C to 102°C)		1/2 in. NPT threaded spud connector.	Detects ultraviolet radiation in flames
C7027A1080/U	Coal fired burners; Gas fired burners; Oil fired burners	96 in. (2438 mm)	Integral nut for 1/2 in. sighting pipe.	0°F to 215°F (-18°C to +102°C)		136733 Heat Block and 390427B bushing	Detects ultraviolet radiation in flames
C7027A1114/U	Coal fired burners; Gas fired burners; Oil fired burners	44 in. (1118 mm)	Integral nut for 1/2 in. sighting pipe.	0°F to 215°F (-18°C to +102°C)		installed 22" flexible conduit	Detects ultraviolet radiation in flames
C7027A1122/U	Oil fired burners; Gas fired burners; Coal fired burners	96 in. (2438 mm)	Integral nut for 1/2 in. sighting pipe.	-40°F to 215°F (-40°C to 102°C)		1/2 in. NPT threaded spud connector.	Detects ultraviolet radiation in flames
C7027A1130/U	Gas fired burners; Oil fired burners; Coal fired burners	96 in. (2438 mm)	Integral nut for 1/2 in. sighting pipe.	-40°F to +215°F (-40°C to +102°C)			Detects ultraviolet radiation in flames
C7044A1006/U	Coal fired burners; Gas fired burners; Oil fired burners	72 in. (1829 mm)	Mounting Bracket provided	0°F to 215°F (-18°C to +102°C)		Mounting bracket	Detects ultraviolet radiation in flames - Side Viewing

Dimensiions in inches (millimeters)

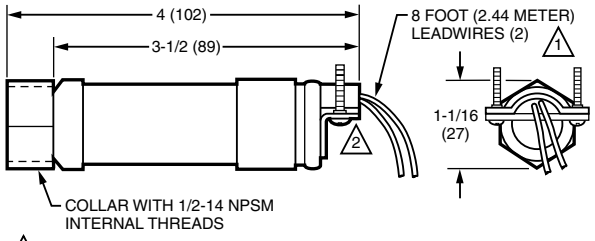

1 C7027A1064 HAS 24 FOOT (7.32 METER) LEADWIRES. C7027A1114 HAS 44 IN. (1.118 M) LEADWIRES WITH 22 IN. (558 MM) FLEXIBLE CONDUIT.

2 MODELS AVAILABLE WITH SPUD CONNECTOR (1/2-14 NPSM INTERNAL THREADS) INSTEAD OF CLAMP TYPE CONNECTOR.

C7027

M1943G

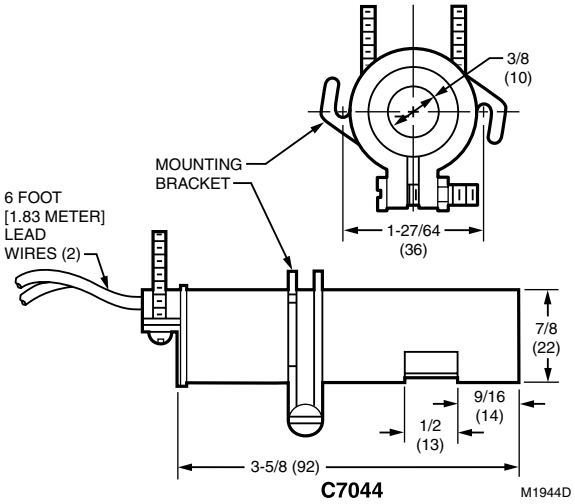

C7044

M1944D

C7035 Minipeeper Ultraviolet Flame Detector

Compact flame detector for use with flame safeguard controls with ultraviolet amplifiers.

- Use with Honeywell Flame Safeguard primary safety controls and burners requiring ultraviolet flame detection.
- Mounts on a 1 in. sighting pipe by using an integral collar.
- Protects the sensing tube with a shield.
- Meets outdoor rain tight requirements of Underwriters Laboratories Inc., NEMA 4 and NEMA 4X.
- Wires in parallel for difficult sighting applications.
- Seals against pressures as high as 5 psi (34.5 kPa) when correctly installed.
- Field-replaceable ultraviolet sensing tube.

Dimensiions in inches (millimeters)

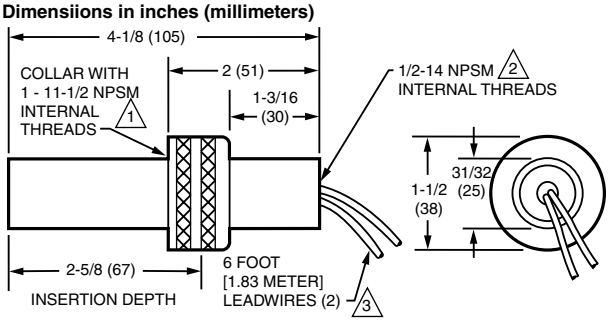

1 DIN APPROVED C7035A1064 HAS 1-11 BSP.P1 INTERNAL MOUNTING THREADS.

2 DIN APPROVED C7035A1064 HAS 1/2-14 BSP-F INTERNAL MOUNTING THREADS.

3 C7035A1056 HAS 12 FOOT (3.66 METER) LEADWIRES.

C7035 M1945E

Type: Ultraviolet, Minipeeper
NEMA Ratings: NEMA 3 and NEMA 4
Electrical Connections: 2 NEC Class 1 leadwires
Vibration: 0.5 G max
Mounting: Integral nut for 1 in. sighting pipe.
Approximate, Dimensions: 1 1/2 in. diameter x 4 1/8 in. long (38 mm diameter x 105 mm long)
Weight: 6 oz (0.17 kg)
Approvals, Underwriters Laboratories Inc.: Listed: File No. MP268, Guide No. MCCZ
Approvals, CSA: Certified: Master Report LR95329-1
Approvals, Swiss RE: Acceptable
Approvals, Factory Mutual: Approved: Report No. 24181.03
Comments: Detects ultraviolet radiation in flames
Used With: Flame Amplifiers: R7249A, B, R7849A, B, R7749B, R7259, R7290

Material Number	Application	Lead Length	Ambient Temperature Range	Approvals, Others	Includes
C7035A1023/U	Coal fired burners; Gas fired burners; Oil fired burners	72 in. (1829 mm)	0°F to 250°F (-18°C to +121°C)		
C7035A1031/U	Coal fired burners; Gas fired burners; Oil fired burners	72 in. (1829 mm)	-40°F to +250°F (-40°C to +121°C)		
C7035A1049/U	Coal fired burners; Gas fired burners; Oil fired burners	72 in. (1829 mm)	0°F to 250°F (-18°C to +121°C)	DIN (Europe)	
C7035A1056/U	Coal fired burners; Gas fired burners; Oil fired burners	144 in. (3658 mm)	-40°F to +250°F (-40°C to +121°C)		
C7035A1064/U	Coal fired burners; Gas fired burners; Oil fired burners	72 in. (1829 mm)	-40°F to +250°F (-40°C to +121°C)		
C7035A1080/U	Coal fired burners; Gas fired burners; Oil fired burners	72 in. (1829 mm)	0°F to 250°F (-18°C to +121°C)		600F leads
C7035A1098/U	Oil fired burners; Gas fired burners; Coal fired burners	72 in. (1829 mm)	-40°F to +250°F (-40°C to +121°C)		

C7061 Dynamic Self-Check Ultraviolet Flame Detector

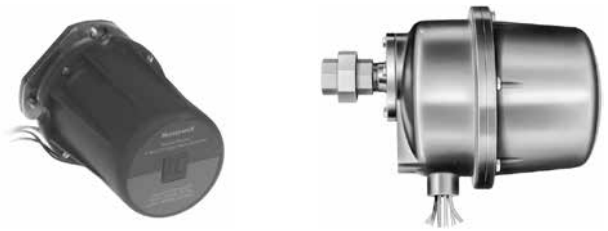

Dynamic self-checking flame detector used with R7861 Dynamic Self-check Amplifiers for sensing the ultraviolet radiation generated by the combustion of gas, oil, or other fuels.

- Oscillating shutter interrupts ultraviolet radiation reaching the UV sensor to provide the UV sensor tube checking function.
- Can be mounted horizontally, vertically or at any angle in between.
- The detector requires faceplate alignment and has integral locating reference points to assure proper operation of the shutter mechanism.
- Field replaceable ultraviolet sensing tube and quartz viewing window.
- Models with threaded conduit fitting and color-coded leadwires allow rapid electrical installation.
- C7061A1038 or A1046 5 pin Brad Harrison type (formally 41307N) mating connector not supplied nor available through Honeywell.
- Two detectors can be wired in parallel to reduce nuisance shutdowns in difficult flame sighting applications.
- Protective heat block built into mounting flange.
- -40°F (-40°C) rated ultraviolet sensing tube is supplied.
- C7061E meets NEMA 4 standards with viewing window rated to 20 psi.
- C7061F has an explosion-proof housing for use in hazardous atmospheres with a viewing window rated to 100 psi.

Type: Ultraviolet, Purple Peeper, Self-Checking
Application: Gas fired burners; Oil fired burners
Comments: Dynamic self-checking flame detector
Used With: Flame Amplifiers: R7861
Approvals, Underwriters Laboratories Inc.: C7061A, M-Listed: File No. MP268, Guide No. MCCZ; C7061F-Recognized: For use in hazardous locations, Class 1 Groups C and D; class 2, Groups E, F and G; File no. E34649
Approvals, CSA: Certified: Master Report LR95329-1
Approvals, Swiss RE: Acceptable
Approvals, Factory Mutual: Approved: Report No. 14740.01

Material Number	NEMA Rating	Lead Length	Electrical Connections	Mounting	Electrical Ratings	Frequency	Ambient Temperature Range	Approvals, Others
C7061A1004/U	NEMA 4	77 in. (1981 mm)	PVC jacketed cable	3/4 in. NPT	120 Vac	50 Hz; 60 Hz	-40°F to +175°F (-40°C to +79°C)	
C7061A1012/U	NEMA 4	96 in. (2438 mm)	Color-coded leadwires	3/4 in. NPT	120 Vac	51 Hz; 60 Hz	-40°F to +175°F (-40°C to +79°C)	
C7061A1020/U	NEMA 4		Terminal block	3/4 in. NPT	120 or 230 Vac	52 Hz; 60 Hz	-40°F to +175°F (-40°C to +79°C)	
C7061A1038/U	NEMA 4		Brad Harrison type number 41310 connector	3/4 in. NPT	120 Vac	53 Hz; 60 Hz	-40°F to +175°F (-40°C to +79°C)	
C7061A1046/U	NEMA 4		Brad Harrison type number 41310 connector	1 in. NPT	120 Vac	54 Hz; 60 Hz	-40°F to +175°F (-40°C to +79°C)	
C7061A1053/U	NEMA 4	96 in. (2438 mm)	Color-coded leadwires	1 in. NPT	120 Vac	55 Hz; 60 Hz	-40°F to +175°F (-40°C to +79°C)	
C7061F1003	Explosion Proof		Terminal block	1 in. NPT	120 or 230 Vac	56 Hz; 60 Hz	-40°F to +175°F (-40°C to +79°C)	CE and conforms to EEXD IIc
C7061F2001/U	Explosion Proof	96 in. (2438 mm)	Color-coded leadwires	1 in. NPT	120 Vac	57 Hz; 60 Hz	-40°F to +175°F (-40°C to +79°C)	
C7061M1008/U	NEMA 4	96 in. (2438 mm)	Color-coded leadwires	1 in. NPT	120 Vac	58 Hz; 60 Hz	-4°F to +175°F (-20°C to +79°C)	
C7061M1016/U	NEMA 4		Brad Harrison type number 41310 connector	1 in. NPT	120 Vac	59 Hz; 60 Hz	-4°F to +175°F (-20°C to +79°C)	

Dimensions for C7061A in inches (millimeters)

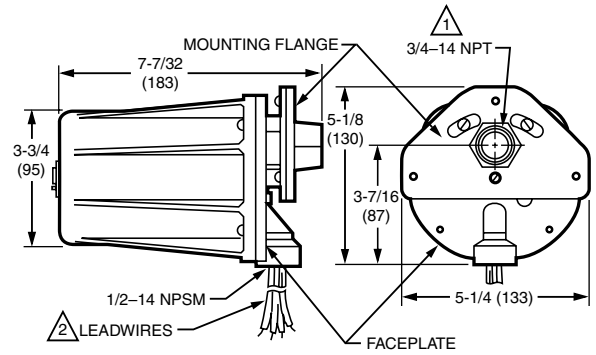

1 C7061A1046, C7061A1053: INCH NPT

2 C7061A1038 AND C7061A1046: TYPE CONNECTOR.

M10167D

Dimensions for C7061F in inches (millimeters)

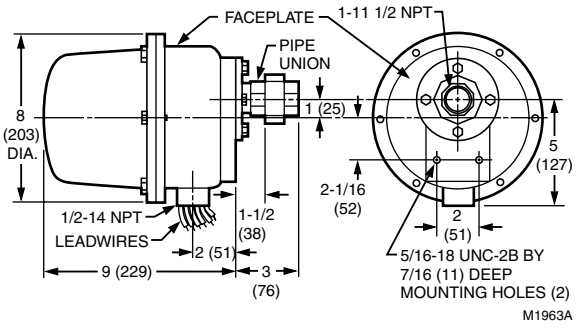

M1963A

Dimensions for C7061M in inches (millimeters)

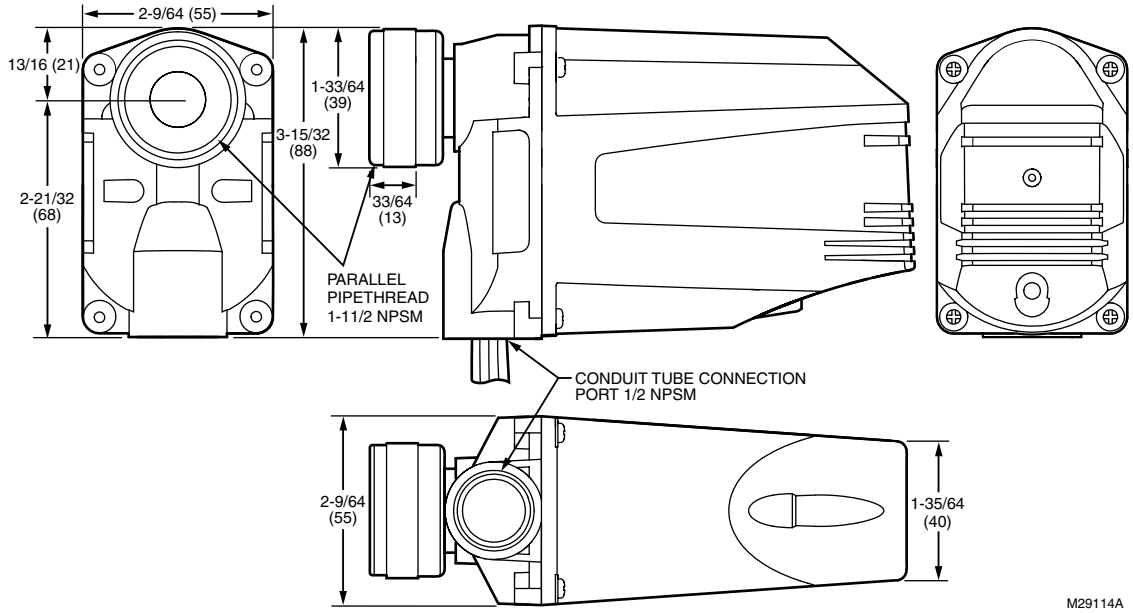

C7076 Adjustable Sensitivity Ultraviolet Flame Detector

Solid state dynamic self check flame detectors for use with BC7000, R4140 or FSP5075 with R7476 Amplifier and 7800 SERIES with R7886 Amplifier.

- Use Honeywell Flame Safeguard primary safety controls requiring adjustable sensitivity ultraviolet flame detection.
- Detect ultraviolet radiation from flames.
- Include dual sensitivity adjustment.
- C7076A meets NEMA 4 standards with viewing window rated to 20 psi.
- C7076D has an explosion-proof housing for use in hazardous atmospheres with a viewing window rated to 100 psi.

Used With: Flame Amplifiers: R7476, R7886

Type: Ultraviolet, Adjustable Sensitivity
Application: Gas fired burners; Oil fired burners
Electrical Connections: Terminal block
Vibration: 0.5 G max
Mounting: 1 in. NPT
Power Consumption: 7.0 W
Ambient Temperature Range: -40°F to +160°F (-40°C to +71°C)
Approvals, CSA: Certified: Master Report LR1620
Approvals, Swiss RE: Acceptable
Approvals, Factory Mutual: Approved: Report No. FM26980
Comments: Dynamic self-checking flame detector with adjustable sensitivity

Replacement Parts:
190971F/U – 100 Vac Coil and Shutter Assembly for C7076A, D
190998A/U – Aspiration assembly for C7076A
191002R/U – 120 Vac Plug in Electronics less UV Sensing Tube for C7076D
191050/U – Quartz Viewing Window for C7076
191053/U – UV Sensing Tube for C7076

Dimensiions in inches (millimeters)

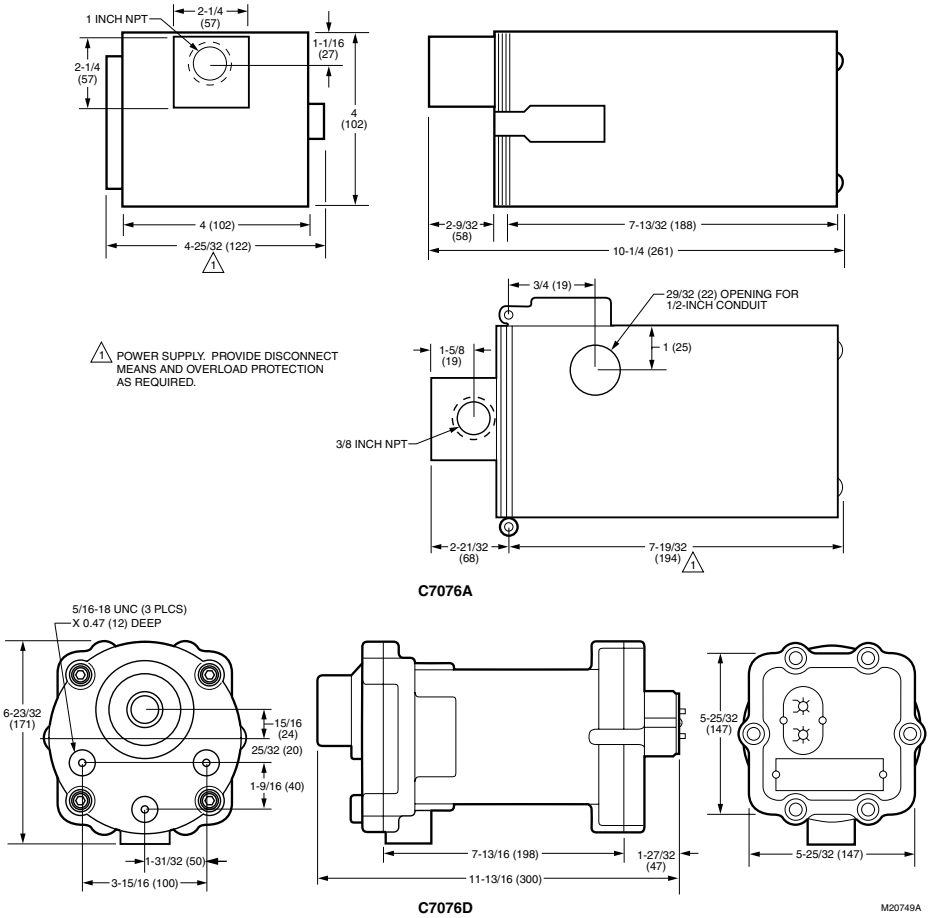

Material Number	NEMA Rating	Electrical Ratings	Frequency	Approximate, Dimensions	Weight	Approvals, Underwriters Laboratories Inc.	Approvals, Others
C7076A1007/U	NEMA 4	120 Vac	60 Hz	4 in. high x 4 in. wide x 10 1/4 in. deep (102 mm high x 102 mm wide x 261 mm deep)	6.6 lb (3 kg)	Listed: File No. MP268, Guide No. MCCZ	
C7076A1015/U	NEMA 4	100 Vac	50 Hz; 60 Hz	4 in. high x 4 in. wide x 10 1/4 in. deep (102 mm high x 102 mm wide x 261 mm deep)	6.6 lb (3 kg)	Listed: File No. MP268, Guide No. MCCZ	
C7076A1031/U	NEMA 4	220 Vac; 240 Vac	50 Hz; 60 Hz	4 in. high x 4 in. wide x 10 1/4 in. deep (102 mm high x 102 mm wide x 261 mm deep)	6.6 lb (3 kg)	Listed: File No. MP268, Guide No. MCCZ	
C7076D1027/U	NEMA 7	120 Vac	60 Hz	6 5/8 in. high x 6 3/16 in. wide x 11 3/4 in. deep (168 mm high x 158 mm wide x 300 mm deep)	17.6 lb (8 kg)	Listed: File No. E34649, Guide No. ZTSZ	Explosion Proof

C7927 Solid State Ultraviolet Flame Detector

The Solid State Ultraviolet Flame Detectors, sense ultraviolet radiation emitted by combustion flames. The flame detectors are used with Honeywell flame safeguard controls to provide flame supervision for gas, oil, or combination gas-oil burners.

- Properly installed the flame detectors are pressure rated for 5 psi.
- Flame detector is used with only the R7851B Flame Amplifier and the 7800 SERIES controls.
- Has an integral collar threaded (internal 1/2-14 NPSM) for mounting on a one-half inch sight pipe.

Type: Ultraviolet, Minipeeper
Application: Gas, Oil, or combination burners-intermittent operation only (burner cycled at least once each 24 hours).
NEMA Rating: NEMA 1
Electrical Connections: 2 NEC Class 1 leadwires
Mounting: 1/2 in. NPT pipe mounting
Approximate, Dimensions: 1 in. diameter x 3 3/4 in. long (25 mm diameter x 95 mm long)
Approvals, Underwriters Laboratories Inc.: Component Recognized: File No. MP268
Approvals, CSA: Report 158158
Approvals, Swiss RE: Acceptable
Approvals, Factory Mutual: Approved: Report No. 3011020
Comments: Detects ultraviolet radiation in flames

Dimensiions in inches (millimeters)

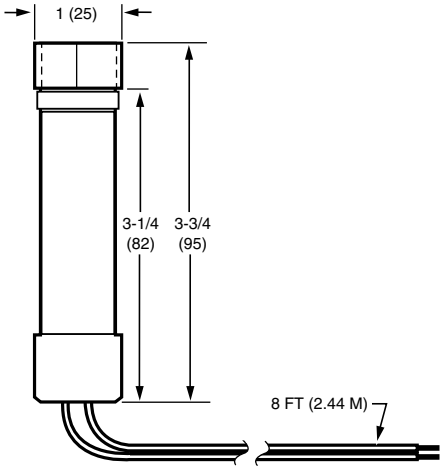

C7927A1016 M24714

Material Number	Lead Length	Ambient Temperature Range	Used With
C7927A1016/U	96 in. (2438 mm)	-40°F to +200°F (-40°C to +93°C)	Flame Amplifiers: R7851B

C7961 Dynamic Self-checking Solid State Ultraviolet Flame Detector

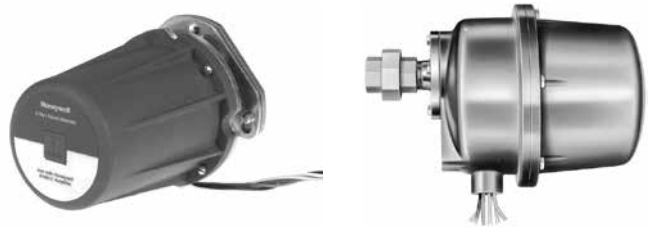

A self-checking flame detector using a solid state UV sensor to detect ultraviolet radiation in flames for supervision of gas, oil or combination gas-oil burners.

- Designed for use with 7800 series controls with the R7851C flame amp.
- Oscillating shutter interrupts ultraviolet radiation reaching the UV sensor to provide the solid state UV sensor checking function.
- Can be mounted horizontally, vertically or at any angle in between.
- The detector requires faceplate alignment and has integral locating reference points to assure proper operation of the shutter mechanism.
- Models available with threaded conduit fitting and color-coded leadwires allow rapid electrical installation.
- C7961E1022 or E1030 5 pin Brad Harrison type (formally 41307N) mating connector not supplied nor available through Honeywell.
- Incorporates UV sensor tube checking feature; used with R7851C1008 Dynamic Self-check Amplifiers.
- Protective heat block built into mounting flange.
- -40°F (-40°C) rated ultraviolet sensing cell is supplied.
- C7961E meets NEMA 4 standards with viewing window rated to 20 psi.
- C7961F has an explosion-proof housing for use in hazardous atmospheres with a viewing window rated to 100 psi.

Type: Ultraviolet, Self-Checking
Application: Gas, Oil or other fuels
Electrical Ratings: 120 Vac (-15% +10%)
Frequency: 50 Hz; 60 Hz
Ambient Temperature Range: -40°F to +175°F (-40°C to +80°C)

Approvals, Underwriters Laboratories Inc.: Component Recognized: File No. MP268
Comments: Detects ultraviolet radiation generated by combustion of gas, oil, or other fuels
Approvals, Swiss RE: Acceptable
Used With: R7851C Dynamic Self-Check Amplifier

Dimensiions in inches (millimeters)

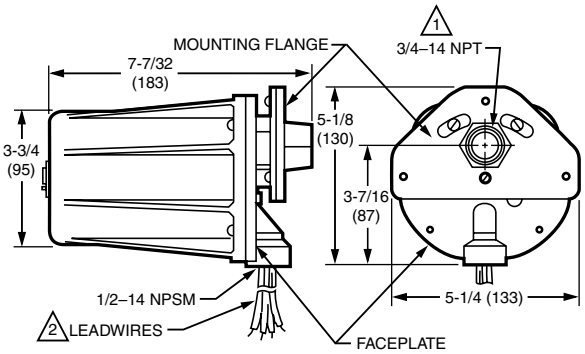

1 C7061A1046, C7061A1053: INCH NPT

2 C7061A1038 AND C7061A1046: TYPE CONNECTOR.

M10167D

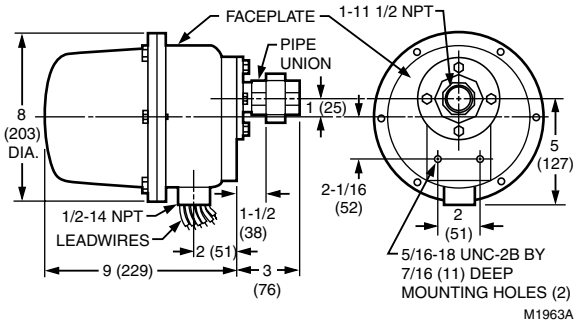

M1963A

Material Number	NEMA Rating	Lead Length	Electrical Connections	Mounting	Approximate, Dimensions	Weight	Approvals, CSA	Approvals, Factory Mutual	Includes
C7961E1006/U	NEMA 4	96 in. (2438 mm)	NEC Class 1 color-coded	3/4 in. NPT	3 3/4 in. diameter (5 1/4 in. diameter including mounting flange) x 7 7/32 in. long (95 mm diameter (133 mm diameter including mounting flange) x 183 mm long)	2.6 lb (1.2 kg)	Certified: Pending	Pending	Quartz Viewing Window rated for 20 psi (138 kPa)
C7961E1014/U	NEMA 4	96 in. (2438 mm)	NEC Class 1 color-coded	1 in. NPT	3 3/4 in. diameter (5 1/4 in. diameter including mounting flange) x 7 7/32 in. long (95 mm diameter (133 mm diameter including mounting flange) x 183 mm long)	2.6 lb (1.2 kg)	Certified: Pending	Pending	Quartz Viewing Window rated for 20 psi (138 kPa)
C7961E1022/U	NEMA 4		5 pin Brad Harrison Type Connector	1 in. NPT	3 3/4 in. diameter (5 1/4 in. diameter including mounting flange) x 7 7/32 in. long (95 mm diameter (133 mm diameter including mounting flange) x 183 mm long)	2.6 lb (1.2 kg)	Certified: Pending	Pending	Quartz Viewing Window rated for 20 psi (138 kPa)
C7961E1030/U	NEMA 4		5 pin Brad Harrison Type Connector	3/4 in. NPT	3 3/4 in. diameter (5 1/4 in. diameter including mounting flange) x 7 7/32 in. long (95 mm diameter (133 mm diameter including mounting flange) x 183 mm long)	2.6 lb (1.2 kg)	Certified: Pending	Pending	Quartz Viewing Window rated for 20 psi (138 kPa)
C7961F1004/U	Explosion Proof	96 in. (2438 mm)	NEC Class 1 color-coded	1 in. NPT	8 in. diameter x 12 in. long (203 mm diameter x 305 mm long)	14.5 lb (6.6 kg)		Approved: Report No. 14740.01	Quartz Viewing Window rated for 100 psi

C7915 Infrared Flame Detector

The C7915 Combination mount Lead Sulfide cell senses infrared radiation from gas, oil, and coal or dual-fuel flames.
- Used for combination or dual-fuel applications.
- Detects pilot and main flame.
- Mounts quickly and easily on a standard 3/4 in. sighting pipe.
- Works where flame rod or rectifying photocell mounts are difficult to apply.

Type: Infrared (Lead Sulfide)
Application: Used for combination or dual-fuel applications
Electrical Connections: Two no. 18 AWG wires
Mounting: 3/4 in. NPT
Approvals, Underwriters Laboratories Inc.: Listed: File No. MP268, Guide No. MCCZ
Approvals, CSA: Certified: Master Report LR95329-1
Approvals, Swiss RE: Acceptable
Approvals, Factory Mutual: Approved: Report No. 24181.03
Comments: Infrared (Lead Sulfide) Flame Detector

Replacement Parts:
32007255-001/U – Lead Sulfide Cell for C7915
50019469-001/U – Magnifying Lens Assembly for C7915A

Material Number	Lead Length	Approximate, Dimensions	Ambient Temperature Range	Includes	Used With
C7915A1010/U	30 in. (762 mm)	1 1/4 in. diameter x 2 1/4 in. long (32 mm diameter x 58 mm long)	-20°F to 125°F operating range (-18°C to 52°C operating range)	With magnifying lens, 32007255-001 Cell	Flame Amplifiers: R7852
C7915A1028/U	48 in. (1219 mm)	1 1/4 in. diameter x 2 1/4 in. long (32 mm diameter x 58 mm long)	-20°F to 125°F operating range (-18°C to 52°C operating range)	With magnifying lens, 32007255-001 Cell, Orifice, heat block, and reducer bushing	Flame Amplifiers: R7852
C7915A1036/U	96 in. (2438 mm)	1 1/4 in. diameter x 2 1/4 in. long (32 mm diameter x 58 mm long)	-20°F to 125°F operating range (-18°C to 52°C operating range)	With magnifying lens, 32007255-001 Cell	Flame Amplifiers: R7852

C7962 Visible Light Flame Detector

The C7962B Visible Light Flame Detector detects the visible light emitted by fuel oil combustion flames. The C7962B Detector is used with Honeywell Flame Safeguard controls to provide fuel oil flame supervision in commercial and industrial burners.
- Used with 7800 SERIES Flame Safeguard controls.
- Used with R7851B Flame Amplifier.
- Has an integral collar threaded (internal 1/2-14 NPSM) for mounting on 1/2 inch sight pipe.

Dimensiions in inches (millimeters)

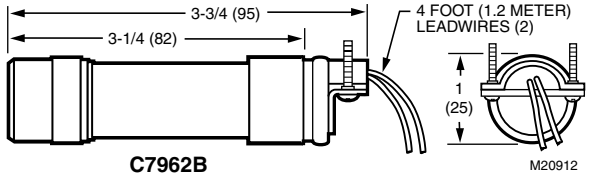

C7962B

Type: Visible Light Flame Detector
Application: Commercial, industrial oil burners
NEMA Ratings: NEMA 1
Electrical Connections: 2 NEC Class 1 leadwires
Vibration: 0.5 G max
Mounting: 1/2 in NPT pipe mounting
Approvals, Underwriters Laboratories Inc.: Component Recognized: File No. MP268
Approvals, CSA: Report 158158
Approvals, Swiss RE: Acceptable

Accessories:
32007439-001/U – Mounting Bracket and screws for C7962B (3/8 in. NPT to 1/2 in. NPT)

Material Number	Lead Length	Approximate, Dimensions	Ambient Temperature Range	Includes	Used With
C7962B1002/U	96 in. (2438 mm)	1 in. diameter x 3 3/4 in. long (25 mm diameter x 95 mm long)	-40°F to +160°F (-40°C to +71°C)		Flame Amplifiers: R7851B
C7962B1010/U	96 in. (2438 mm)	1 in. diameter x 3 3/4 in. long (25 mm diameter x 95 mm long)	-40°F to +160°F (-40°C to +71°C)	32007439-001 Mounting Bracket and screws	Flame Amplifiers: R7851B

Optical Flame Detector Accessories or Parts

Material Number	Description	Used With
105172C/U	Pressure Seal-off Adapter (3/4 NPT) w/UV Quartz window for C7012, C7024, C7027, C7061	C7012, C7024, C7027, C7061; C7024; C7012; C7061
110634A/U	Magnifying Lens Assembly for C7015A	C7015
113228/U	UV Sensing Tube (-20°F to 175°F) for C7012; C7024	C7012; C7024
114372/U	Bulk Pack -20 PSI window for C7012E, F; C7024; C7061	C7024; C7012; C7061
114638/U	Rubber Washer (Red) for C7012A, E; C7024A; C7061A; C7961A	C7012; C7061; C7024
120739/U	Flange Gasket for C7012, C7024, C7061	C7024; C7012; C7061
120930/1662/F	Cover for C7012A,G, C7024E, C7061A, C7961E	C7012A,G, C7024E, C7061A, C7961E; C7012
120934-520/U	Mounting Flange (3/4") for C7012A, E; C7024A; C7061A; C7961E	C7012A,G, C7024E, C7061A, C7961E
122748/U	50 PSI Quartz Window for C7012, C7061	C7012; C7061; C7024
124198/U	Mounting Flange (1") for C7012A, E; C7024A; C7061A; C7961E	C7012A,G, C7024E, C7061A, C7961E
129464M/U	UV Power Tube (0°F to 250°F) for C7035	C7035
129464N/U	UV Power Tube (-40°F to 250°F) for C7035, C7061	C7061; C7035
129811B/U	Socket Assembly w/NPT threads	C7035
190971B/U	120 Vac Coil and Shutter Assembly for C7012E, F, C7061A, F	C7012E, F; C7061A, F
190971D/F	110 Vac 50 Hz Coil and Shutter Assembly for C7012E1187, 1195	C7012E
190971D/U	110 Vac 50 Hz Coil and Shutter Assembly for C7012E1187, 1195	C7012E
190971F/U	100 Vac Coil and Shutter Assembly for C7076A, D	C7076A, D
190971G/U	24 Vdc Coil and Shutter Assembly for C7024E, F; C7961	C7024;C7961
190998A/U	Aspiration assembly for C7076A	C7076A
190999/U	Grommet for C7076 Sensors	C7076
191002D/U	220/240 Vac Plug in Electronics less UV Sensing Tube for C7076A	C7076A
191002R/U	120 Vac Plug in Electronics less UV Sensing Tube for C7076D	C7076D
191050/U	Quartz Viewing Window for C7076	C7076
191053/U	UV Sensing Tube for C7076	C7076
191054/U	Housing Gasket for C7076	C7076
191203/0767/U	Hinge for C7076A	C7076
191284/U	Aluminum Shield for C7035	C7035
191702/U	Electronics less UV sensing tube for C7012F (120 Vac)	C7012F
32004080-001/U	120 Vac Electronics less UV Sensing Tube and Shutter for C7012C	C7012C
32004080-002/U	24 Vdc Plug in Electronics less UV Sensing Tube for C7024F	C7024F
32007255-001/U	Lead Sulfide Cell for C7915	C7915
32007439-001/U	Mounting Bracket and screws for C7962B (3/8 in. NPT to 1/2 in. NPT)	C7962B
390427B/U	Envelope with Reducer bushing (1/2" to 3/8" NPT)	C7027; C7015
50019469-001/U	Magnifying Lens Assembly for C7915A	C7915; C7015

Q179A, B Flame Rectifier Gas Pilots

Q179A, B Gas Pilot Burner Assemblies use the flame rectification principle to prove the flame. Q179A, B are used in conjunction with a suitable electronic flame safeguard control on industrial or commercial gas and gas pilot ignited oil burners.

- Q179A is a gas pilot assembly (with a flame electrode rod) and ignition electrode, making it suitable for applications requiring an interrupted or intermittent electrically ignited gas pilot burner.
- Q179B has only the flame electrode and is suitable for use in continuous pilot applications.
- Primary aerated type burner is equipped with stainless steel fins that provide the proper flame rod area to ground area ratio for maximum flame signal and flame stabilization.
- Stainless steel electrode(s) are mounted in ceramic insulators, which permit electrode adjustment.
- Rajah connectors facilitate disconnecting (A1126 has terminal screws).
- Bracket permits side or end mounting.

Type of Gas: Natural gas; Gas consumption – 2.0 cfh (0.06 m3/hr)
Aeration: Primary
Compression Fitting Size: 1/4 in. compression coupling, 6.4 mm compression coupling
Mounting: side or end mount
Approximate, Dimensions: 4 5/8 in. high x 1 11/16 in. wide x 3 in. deep (118 mm high x 43 mm wide x 76 mm deep)

Approvals, Underwriters Laboratories Inc.: Listed: File No. MP268, Guide No. MCCZ
Approvals, CSA: Certified: File No. LR1620, Guide No. 140-A-2
Approvals, Factory Mutual: Approved: Report No. 22961

Material Number	Application	Orifice	Wiring Terminal Type	Tip Style	Includes	Used With
Q179A1001/U	For Intermittent or Interrupted Ignition	0.025 in. dia. (0.635 mm dia.)	Rajah	I	Flame electrode and ignition electrode	Q624 or other suitable ignition transformer.
Q179A1035/U	For Intermittent or Interrupted Ignition	0.025 in. dia. (0.635 mm dia.)	Rajah	45 degree right hand	Flame electrode and ignition electrode	Q624 or other suitable ignition transformer.
Q179A1050/U	For Intermittent or Interrupted Ignition	0.028 in. dia. (0.711 mm dia.)	Rajah	T	Flame electrode and ignition electrode	Q624 or other suitable ignition transformer.
Q179A1076/U	For Intermittent or Interrupted Ignition	0.028 in. dia. (0.711 mm dia.)	Rajah	45 degree Y	Flame electrode and ignition electrode	Q624 or other suitable ignition transformer.
Q179A1092/U	For Intermittent or Interrupted Ignition	0.028 in. dia. (0.711 mm dia.)	Rajah	45 degree T	Flame electrode and ignition electrode	Q624 or other suitable ignition transformer.
Q179A1118/U	For Intermittent or Interrupted Ignition	0.025 in. dia. (0.635 mm dia.)	Rajah	45 degree left hand	Flame electrode and ignition electrode	Q624 or other suitable ignition transformer.
Q179A1126/U	For Intermittent or Interrupted Ignition	0.025 in. dia. (0.635 mm dia.)	Screw Terminal	I	Flame electrode and ignition electrode with screw terminal connections	Q624 or other suitable ignition transformer.
Q179A1183/U	For Intermittent or Interrupted Ignition	0.025 in. dia. (0.635 mm dia.)	Rajah	I	Ignition Electrode Only	Q624 or other suitable ignition transformer.
Q179B1042/U	For Continuous (Standing) pilot	0.025 in. dia. (0.635 mm dia.)	Rajah	T	Flame electrode	
Q179B1109/U	For Continuous (Standing) pilot	0.025 in. dia. (0.635 mm dia.)	Rajah	45 degree left hand	Flame electrode	
Q179B1117/U	For Continuous (Standing) pilot	0.025 in. dia. (0.635 mm dia.)	Rajah	45 degree I	Flame electrode	

Q179C, D Miniature Rectifier Pilots

Q179C, D Gas Pilot Burner Assemblies use the flame rectification principle to prove the flame. Q179C, D are used in conjunction with a suitable electronic flame safeguard control on industrial or commercial gas and gas pilot ignited oil burners.

- Q179C is a gas pilot assembly (with a flame electrode rod) and ignition electrode, making it suitable for applications requiring an interrupted or intermittent electrically ignited gas pilot burner.
- Q179D has only the flame electrode and is suitable for use in continuous pilot applications.
- Primary aerated type burner is equipped with stainless steel fins that provide the proper flame rod area to ground area ratio for maximum flame signal and flame stabilization.
- Stainless steel electrode(s) are mounted in ceramic insulators, which permit electrode adjustment.
- Rajah connectors facilitate disconnecting.

Aeration: Primary
Compression Fitting Size: 1/4 in. compression coupling, 6.4 mm compression coupling
Wiring Terminal Type: Rajah

Approvals, Underwriters Laboratories Inc.: Component Recognized: File No. MH9928, Guide No. MCUR2
Approvals, CSA: Certified: Master Report LR95329-1

Material Number	Application	Mounting	Tip Style	Orifice	Approximate, Dimensions	Includes	Used With	Type of Gas
Q179C1009/U	For Intermittent or Interrupted Ignition	Dual Wing-Rear	D	0.026 in. dia. (0.66 mm dia.)	3 1/8 in. high x 2 7/16 in. wide x 1 in. deep (79 mm high x 62 mm wide x 25 mm deep)	Flame electrode and ignition electrode	Q624 or other suitable ignition transformer.	Natural
Q179C1025/U	For Intermittent or Interrupted Ignition	Single Wing-Rear	L	0.024 in. dia. (0.60 mm dia.)	3 1/8 in. high x 2 7/16 in. wide x 1 in. deep (79 mm high x 62 mm wide x 25 mm deep)	Flame electrode and ignition electrode	Q624 or other suitable ignition transformer.	Natural
Q179C1033/U	For Intermittent or Interrupted Ignition	Dual Wing-Left Side	D	0.026 in. dia. (0.66 mm dia.)	3 1/8 in. high x 3 1/32 in. wide x 1 in. deep (79 mm high x 77 mm wide x 25 mm deep)	Flame electrode and ignition electrode	Q624 or other suitable ignition transformer.	Natural
Q179C1041/U	For Intermittent or Interrupted Ignition	Dual Wing-Right Side	D	0.026 in. dia. (0.66 mm dia.)	3 1/8 in. high x 3 1/32 in. wide x 1 in. deep (79 mm high x 77 mm wide x 25 mm deep)	Flame electrode and ignition electrode	Q624 or other suitable ignition transformer.	Natural
Q179C1058/U	For Intermittent or Interrupted Ignition	Single Wing-Left Side	L	0.024 in. dia. (0.60 mm dia.)	3 1/8 in. high x 3 1/32 in. wide x 1 in. deep (79 mm high x 77 mm wide x 25 mm deep)	Flame electrode and ignition electrode	Q624 or other suitable ignition transformer.	Natural
Q179C1066/U	For Intermittent or Interrupted Ignition	Single Wing-Right Side	K	0.024 in. dia. (0.60 mm dia.)	3 1/8 in. high x 2 7/16 in. wide x 1 in. deep (79 mm high x 62 mm wide x 25 mm deep)	Flame electrode and ignition electrode	Q624 or other suitable ignition transformer.	Natural
Q179C1090/U	For Intermittent or Interrupted Ignition	Dual Wing-Rear	D	0.016 in. dia. (0.40 mm dia.)	3 1/8 in. high x 2 7/16 in. wide x 1 in. deep (79 mm high x 62 mm wide x 25 mm deep)	Flame electrode and ignition electrode	Q624 or other suitable ignition transformer.	LP
Q179D1008/U	For Continuous (Standing) pilot	Dual Wing-Rear	D	0.026 in. dia. (0.66 mm dia.)	3 1/8 in. high x 2 7/16 in. wide x 1 in. deep (79 mm high x 62 mm wide x 25 mm deep)	Flame electrode and thermocouple adapter	Q340 Thermocouple or Q313A Thermopile Generator.	Natural
Q179D1016/U	For Continuous (Standing) pilot	Dual Wing-Left Side	D	0.026 in. dia. (0.66 mm dia.)	3 1/8 in. high x 3 1/32 in. wide x 1 in. deep (79 mm high x 77 mm wide x 25 mm deep)	Flame electrode and thermocouple adapter	Q340 Thermocouple or Q313A Thermopile Generator.	Natural
Q179D1024/U	For Continuous (Standing) pilot	Dual Wing-Right Side	D	0.026 in. dia. (0.66 mm dia.)	3 1/8 in. high x 3 1/32 in. wide x 1 in. deep (79 mm high x 77 mm wide x 25 mm deep)	Flame electrode and thermocouple adapter	Q340 Thermocouple or Q313A Thermopile Generator.	Natural
Q179D1057/U	For Continuous (Standing) pilot	Single Wing-Left Side	L	0.024 in. dia. (0.60 mm dia.)	3 1/8 in. high x 3 1/32 in. wide x 1 in. deep (79 mm high x 77 mm wide x 25 mm deep)	Flame electrode and thermocouple adapter	Q340 Thermocouple or Q313A Thermopile Generator.	Natural

C7005 Flame Rectifier Pilots

Gas Pilot Burner Assemblies include a flame rod to prove the pilot flame. The assemblies are used with a suitable flame safeguard control on industrial or commercial gas burners or oil burners with gas pilots.

- Used with Honeywell controls using the flame rectification principle.
- C7005A is for continuous pilot applications.
- It includes an insulated flame rod, properly positioned relative to the flame retention type nozzle. C7005B is similar to C7005A, but includes an ignition electrode suitable for automatic, electric-spark ignition, gas pilot applications.
- Individually mounted flame rod and ignition electrode in ceramic insulators allow the head assembly to fit inside a 3-inch pipe.
- Stainless steel fins on the flame retention type pilot head provide the correct ratio of flame rod area to ground area for maximum flame signal, and are beneficial in stabilizing the pilot flame.
- Pilot flame retention nozzle and mixing tube are threaded internally, 1/2-14 NPT and 3/8-18 NPT, respectively, and can be assembled with standard pipe fittings.
- Pilot can be installed in vertical, horizontal, or inclined position.
- Rajah connectors facilitate electrical connections.

Connection Type: 1/2 in. NPT male thread Gas Fitting
Wiring Terminal Type: Rajah
Approximate, Dimensions: 3 in. diameter x 3 1/2 in. deep (76 mm diameter x 343 mm deep)
Approvals, Underwriters Laboratories Inc.: Listed: File No. MP268, Guide No. MCCZ

Approvals, CSA: Certified: File No. LR1620, Guide No. 140-A-2
Approvals, Factory Mutual: Approved: Report No. 24181.04
Approvals, Swiss RE: Acceptable

Material Number	Application	Orifice	Includes	Used With	Type of Gas
C7005A1037/U	For Continuous (Standing) pilot	0.052 in. dia.			Natural
C7005B1035/U	For automatic electrically ignited pilot	0.052 in. dia.	Ignition electrode	Q624 or other suitable ignition transformer.	Natural
C7005B1050/U	For automatic electrically ignited pilot	0.028 in. dia. (0.711 mm dia.)	Ignition electrode	Q624 or other suitable ignition transformer.	LP

Commercial Pilot Burners Parts or Accessories

Material Number	Description	Used With
100204B/U	This Natural Gas Venturi Mixing Tube is used for C7005A and B	C7005A, C7005B
101738/U	This Insulator for Flame rod or Igniter is used with C7005A and B	C7005A, C7005B
101738A/U	This Ignition Assembly, including; electrode, bracket and Rajah Connector, is used for C7005A and B	C7005A, C7005B
101738B/U	This Flame Rod Assembly, including; Kanthal Electrode, Bracket and Rajah Connector, is used for C7005A and B	C7005A, C7005B
101739/U	This 4 in. Kanthal Ignition Electrode is used for C7005A and B	C7005A, C7005B
101741/0020/U	This 7/8 in. long Rajah Connector, with plug end, is used for C7005A and B	C7005A, C7005B
101742/0021/U	This Electrode Mounting Clip is used for C7005A and B	C7005A, C7005B
101743/U	This Mounting Bracket is used for C7005A and B	C7005A, C7005B
103534/U	This 8 in. Kanthal flame electrode is used with C7005A and C7005B	C7005A, C7005B
104312/U	This Rajah Connector for Flame Electrode is used with Q179A and B	Q179A, Q179B
131065/U	131065 Adapts Q340 Thermal Couple to Q179B with 102462. Sold in custom packs	Q179A, Q179B
133451A/U	This T Port or LH 90 degree Flame Rod and Insulator, is used for Q179A and B	Q179A, Q179B
37356/520/U	This Rajah connector for ignition electrodes is used with Q179A, Q179B, Q179C, or Q179D	Q179A, Q179B, Q179C, Q179D
388146KD/U	This 0.016 in. diameter, LP Gas Spud Orifice, is used for Q179C and D. Sold in bulk packs	Q179C, Q179D
395390-13/U	This LP gas, 0.013 in. diameter Orifice, is used for Q179A and B	Q179A, Q179B
395390-28/U	This Natural gas, 0.028 in. diameter Orifice, is used for Q179A and B	Q179A, Q179B
R1061012/U	This Ignition cable or Flame Rod Cable is rated at 350°F, 20,000 volts R.M.S. and used with C7005B, Q179A and Q179C	C7005B, Q179A, Q179C
R1298020/U	This Cable Flame Rod Lead, is rated at 400°F, 600 volts R.M.S., and used with Q179	Q179

Q624 Solid State Ignition Transformer

Used to ignite pilots on commercial or industrial gas burners.

- Ignite gas pilots with spark gaps up to 1/4 in. (6.5 mm).
- Reliable light off with 15,000 peak voltage.
- Prevent detection of the ignition spark when properly applied in a flame detection system with the C7027, C7035 or C7044 Minipeeper Ultraviolet Flame Detector.
- For use only in interrupted ignition applications.
- Mount in same space used by conventional ignition transformer.
- Light weight, 3 lbs. (1.4 kg) versus 8-1/2 lbs. (3.9 kg) for standard transformers.

Temperature Range: -40°F to +125°F
Approximate, Dimensions: 6 3/4 in. high x 4 1/4 in. wide x 3 in. deep (171.5 mm high x 108 mm wide x 76 mm deep)
Weight lb. (kg): 3 lb (1.4 kg)
Approvals, Underwriters Laboratories Inc.: Component Recognized
Approvals, CSA: Certified: File No. LR95329
Operating Humidity Range (% RH): 95% RH

Accessories:
32004766-001/U – 24 inch Ignition Cable for Q624 and Q652
32004766-002/U – 120 inch Ignition Cable used with Q624 and Q652
32004766-003/U – Ignition Cable for Q624 and Q652 (order by foot – enter the number of feet in the Quantity box)
32004766-004/U – 60 inch Ignition Cable with straight boots
32004766-005/U – 8 inch Ignition Cable w/90 degree and straight boot
32004766-006/U – 36 inch Ignition Cable w/90 degree and straight boot
50060793-001/U – 24 inch Ignition Cable for Q624 and Q652
50060793-002/U – 120 inch Ignition Cable used with Q624 and Q652
50060793-003/U – Ignition Cable for Q624 and Q652 (order by foot – enter the number of feet in the Quantity box)
50060793-004/U – 60 inch Ignition Cable with straight boots
50060793-005/U – 8 inch Ignition Cable w/90 degree and straight boot
50060793-006/U – 36 inch Ignition Cable w/90 degree and straight boot
50060793-007/U – 36 inch ignition cable w/90 degree boot on one end only
50060793-008/U – Ignition Cable w/90 degree boot on one end only
50060793-009/U – Ignition Cable w/90 degree boot on one end only
50060793-010/U – Ignition Cable w/90 degree boot on one end only
50060793-011/U – 19 inch Ignition Cable w/90 degree and ring end used with Q624 and Q652
50060793-012/U – 36 inch Ignition Cable with 90 degree boot and 1/4 in. spad terminal used with Q624 and Q652

Dimensions in inches (millimeters)

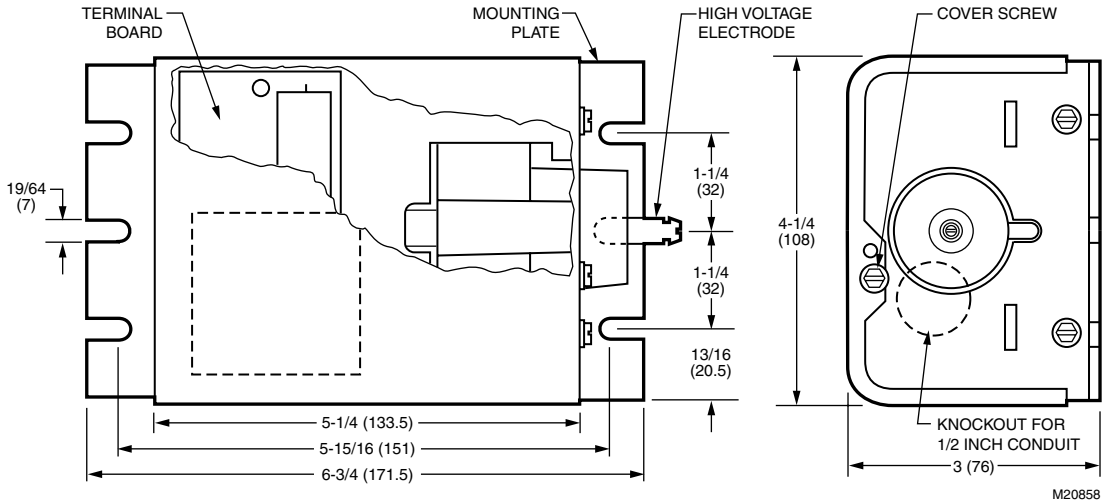

Material Number	Application	Voltage	Frequency
Q624A1014/U	Gas Ignition Transformer	120 Vac	50 Hz; 60 Hz

Q652 Solid State Spark Generator

Used to ignite gas burners in commercial and industrial applications.

- Lightweight, 1 lb. (0.4 kg).
- Include single high voltage electrode for gas applications.
- For use with gas pilots with electrode spacings between 0.029 and 0.125 in.
- Secondary Peak Voltage: 14Kv rms at 21Khz.
- Mount in same space used by conventional ignition transformer.
- For use only in interrupted ignition applications.
- Prevent detection of the ignition spark when properly applied in a flame detection system with the C7027, C7035 or C7044 Minipeeper Ultraviolet Flame Detector.

Temperature Range: 14°F to 113°F
Approximate, Dimensions: 4 15/32 in. high x 2 15/16 in. wide x 2 9/32 in. deep (101.6 mm high x 77.5 mm wide x 58.4 mm deep)
Weight lb. (kg): 1 lb (0.45 kg)
Approvals, Underwriters Laboratories Inc.: Component Recognized File MH14381
Approvals, CSA: LA66894
Operating Humidity Range (% RH): 90% RH

Accessories:
32004766-001/U – 24 inch Ignition Cable for Q624 and Q652
32004766-002/U – 120 inch Ignition Cable used with Q624 and Q652
32004766-003/U – Ignition Cable for Q624 and Q652 (order by foot – enter the number of feet in the Quantity box)
32004766-004/U – 60 inch Ignition Cable with straight boots
32004766-005/U – 8 inch Ignition Cable w/90 degree and straight boot
32004766-006/U – 36 inch Ignition Cable w/90 degree and straight boot
50060793-001/U – 24 inch Ignition Cable for Q624 and Q652
50060793-002/U – 120 inch Ignition Cable used with Q624 and Q652
50060793-003/U – Ignition Cable for Q624 and Q652 (order by foot – enter the number of feet in the Quantity box)
50060793-004/U – 60 inch Ignition Cable with straight boots
50060793-005/U – 8 inch Ignition Cable w/90 degree and straight boot
50060793-006/U – 36 inch Ignition Cable w/90 degree and straight boot
50060793-007/U – 36 inch ignition cable w/90 degree boot on one end only
50060793-008/U – Ignition Cable w/90 degree boot on one end only
50060793-009/U – Ignition Cable w/90 degree boot on one end only
50060793-010/U – Ignition Cable w/90 degree boot on one end only
50060793-011/U – 19 inch Ignition Cable w/90 degree and ring end used with Q624 and Q652
50060793-012/U – 36 inch Ignition Cable with 90 degree boot and 1/4 in. spad terminal used with Q624 and Q652

Dimensions in inches (millimeters)

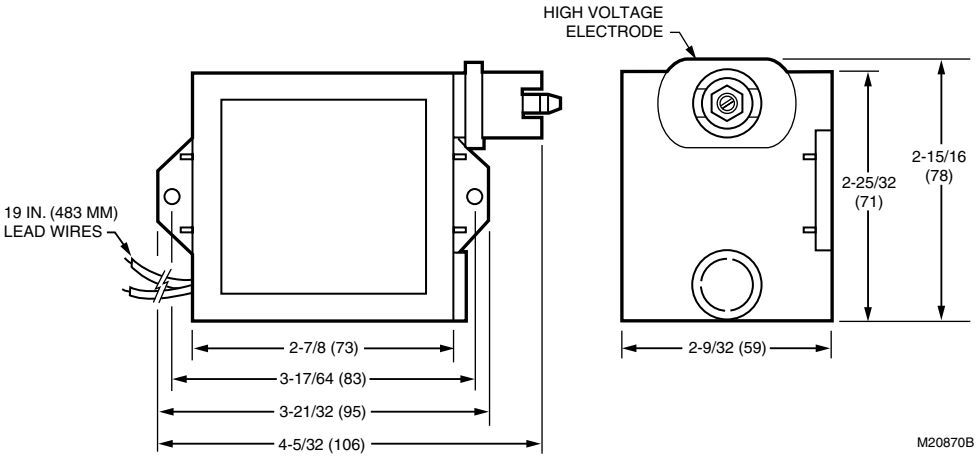

Material Number	Application	Voltage	Frequency
Q652B1006/U	Gas Ignition Transformer	120 Vac	60 Hz
Q652B1014/U	Solid State Ignitor Spark Generator-Gas Applications; 220V 60 Hz	220 Vac	60 Hz

Ignition Transformer Accessories or Parts

Material Number	Description	Used With
134666/510/U	High voltage terminal insulator for Q652 and Q624	Q652; Q624
32004766-001/U	24 inch Ignition Cable for Q624 and Q652	Q652; Q624
32004766-002/U	120 inch Ignition Cable used with Q624 and Q652	Q652; Q624
32004766-003/U	Ignition Cable for Q624 and Q652 (order by foot – enter the number of feet in the Quantity box)	Q652; Q624
32004766-004/U	60 inch Ignition Cable with straight boots	Q652; Q624
32004766-005/U	8 inch Ignition Cable w/90 degree and straight boot	Q652; Q624
32004766-006/U	36 inch Ignition Cable w/90 degree and straight boot	Q652; Q624
32004766-007/U	36 inch ignition cable w/90 degree boot on one end only	Q652; Q624
32004766-008/U	Ignition Cable w/90 degree boot on one end only	Q652; Q624
32004766-009/U	Ignition Cable w/90 degree boot on one end only	Q652; Q624
32004766-010/U	Ignition Cable w/90 degree boot on one end only	Q652; Q624
32004766-011/U	19 inch Ignition Cable w/90 degree and ring end used with Q624 and Q652	Q652; Q624
32004766-012/U	36 inch ignition cable w/90 degree boot on one end only	Q652; Q624
4074BTN/U	Bag assembly consisting of washer (103218), cap terminal (135793) and ferrule (37356) for Q624	Q624A
50060793-001/U	24 inch Ignition Cable for Q624 and Q652	Q652; Q624
50060793-002/U	120 inch Ignition Cable used with Q624 and Q652	Q652; Q624
50060793-003/U	Ignition Cable for Q624 and Q652 (order by foot – enter the number of feet in the Quantity box)	Q652; Q624
50060793-004/U	60 inch Ignition Cable with straight boots	Q652; Q624
50060793-005/U	8 inch Ignition Cable w/90 degree and straight boot	Q652; Q624
50060793-006/U	36 inch Ignition Cable w/90 degree and straight boot	Q652; Q624
50060793-007/U	36 inch ignition cable w/90 degree boot on one end only	Q652; Q624
50060793-008/U	Ignition Cable w/90 degree boot on one end only	Q652; Q624
50060793-009/U	Ignition Cable w/90 degree boot on one end only	Q652; Q624
50060793-010/U	Ignition Cable w/90 degree boot on one end only	Q652; Q624
50060793-011/U	19 inch Ignition Cable w/90 degree and ring end used with Q624 and Q652	Q652; Q624
50060793-012/U	36 inch Ignition Cable with 90 degree boot and 1/4 in. spad terminal used with Q624 and Q652	Q652; Q624
50060793-013/U	48 inch Ignition Cable with 90 degree boot and 1/4 in. spad terminal used with Q624 and Q652	Q652; Q624

M9484D, E, F; M9494D, F Modutrol® IV Motors

Reversing, proportional motors used to drive burner firing rate valves, dampers or auxiliary equipment. Replaces M941A, C, D motors.

- Designed for flame safeguard applications in commercial/industrial oil or gas burner system.
- Vibration resistant electronic drive circuit.
- Regulated by three-wire proportional controller.
- Stroke is field-adjustable to 90 or 160 degrees.

Frequency: 50 Hz; 60 Hz
Stroke: Adjustable; 90 to 160 degrees, Symmetrical
Power Consumption: 15 W
Input Signal: 135 ohm
Shaft Dimensions: double-ended, 3/8 in. square (double-ended, 9.5 mm square)
Deadweight Load on Shaft: Either End – 200 lb (300 lb combined power and auxiliary shafts); 90.8 kg (136 kg combined power and auxiliary shafts)

Approximate, Dimensions: 6.45 in high x 5.5 in wide x 7.3 in deep (164 mm high x 140 mm wide x 185 mm deep)
Ambient Temperature Range: -40°F to +150°F (-40°C to +66°C)
Approvals, Underwriters Laboratories Inc.: Listed: File No. E4436, Guide No. XAPX for USA and Canada
Supply Voltage: 24 Vac

Accessories:
Q100B1006/U – Linkage to connect Modutrol motor to V51E Butterfly Valve. Includes 10 3/4 inch Linkage Rod.

Material Number	Torque Rating (lb-in.)	Torque Rating (Nm)	Additional Torque Ratings (lb-in.)	Additional Torque Ratings (Nm)	Internal Auxiliary Switch	Auxiliary Switch Setting	Auxiliary Switch Ratings	Switch Ratings	Timing	Factory Stroke Setting
M9484D1010/U	150 lb-in.	17 Nm	Breakaway – 300 lb-in.	Breakaway – 34.0 Nm				At 120 Vac – 7.2 AFL, 43.2 ALR, 40 VA pilot duty opposite contact; At 240 Vac – 3.6 AFL, 21.6 ALR, 40 VA pilot duty opposite contact	90 degree stroke – 30 seconds, 160 degree stroke – 60 seconds	160 degrees
M9484E1009/U	75 lb-in.	8.5 Nm	Breakaway – 150 lb-in.	Breakaway – 17.0 Nm	1	11 degrees	120 Vac – 7.2 AFL, 43.2 ALR, 40 VA pilot duty opposite contact; At 240 Vac – 3.6 AFL, 21.6 ALR, 40 VA pilot duty opposite contact		90 degree stroke – 15 seconds, 160 degree stroke – 30 seconds	90 degrees
M9484E1017/U	150 lb-in.	17 Nm	Breakaway – 300 lb-in.	Breakaway – 34.0 Nm	1	1 degree	120 Vac – 7.2 AFL, 43.2 ALR, 40 VA pilot duty opposite contact; At 240 Vac – 3.6 AFL, 21.6 ALR, 40 VA pilot duty opposite contact		90 degree stroke – 30 seconds, 160 degree stroke – 60 seconds	90 degrees
M9484E1033/U	150 lb-in.	17 Nm	Breakaway – 300 lb-in.	Breakaway – 34.0 Nm	1	7 degrees	120 Vac – 7.2 AFL, 43.2 ALR, 40 VA pilot duty opposite contact; At 240 Vac – 3.6 AFL, 21.6 ALR, 40 VA pilot duty opposite contact		90 degree stroke – 30 seconds, 160 degree stroke – 60 seconds	90 degrees
M9484F1007/U	150 lb-in.	17 Nm	Breakaway – 300 lb-in.	Breakaway – 34.0 Nm	2	7 and 80 degrees	120 Vac – 7.2 AFL, 43.2 ALR, 40 VA pilot duty opposite contact; At 240 Vac – 3.6 AFL, 21.6 ALR, 40 VA pilot duty opposite contact		90 degree stroke – 30 seconds, 160 degree stroke – 60 seconds	90 degrees
M9484F1023/U	75 lb-in.	8.5 Nm	Breakaway – 150 lb-in.	Breakaway – 17.0 Nm	2			At 120 Vac – 7.2 AFL, 43.2 ALR, 40 VA pilot duty opposite contact; At 240 Vac – 3.6 AFL, 21.6 ALR, 40 VA pilot duty opposite contact	90 degree stroke – 15 seconds, 160 degree stroke – 30 seconds	90 degrees

Firing Rate Motors and Linkages

Material Number	Torque Rating (lb-in.)	Torque Rating (Nm)	Additional Torque Ratings (lb-in.)	Additional Torque Ratings (Nm)	Internal Auxiliary Switch	Auxiliary Switch Setting	Auxiliary Switch Ratings	Switch Ratings	Timing	Factory Stroke Setting
M9484F1031/U	150 lb-in.	17 Nm	Breakaway – 300 lb-in.	Breakaway – 34.0 Nm	2	7 and 80 degrees	120 Vac – 7.2 AFL, 43.2 ALR, 40 VA pilot duty opposite contact; At 240 Vac – 3.6 AFL, 21.6 ALR, 40 VA pilot duty opposite contact		90 degree stroke – 30 seconds, 160 degree stroke – 60 seconds	90 degrees
M9484F1049/U	150 lb-in.	17 Nm	Breakaway – 300 lb-in.	Breakaway – 34.0 Nm	2	35 and 120 degrees	120 Vac – 7.2 AFL, 43.2 ALR, 40 VA pilot duty opposite contact; At 240 Vac – 3.6 AFL, 21.6 ALR, 40 VA pilot duty opposite contact		90 degree stroke – 30 seconds, 160 degree stroke – 60 seconds	160 degrees
M9484F1057/U	150 lb-in.	17 Nm	Breakaway – 300 lb-in.	Breakaway – 34.0 Nm	2			At 120 Vac – 7.2 AFL, 43.2 ALR, 40 VA pilot duty opposite contact; At 240 Vac – 3.6 AFL, 21.6 ALR, 40 VA pilot duty opposite contact	90 degree stroke – 30 seconds, 160 degree stroke – 53 seconds	
M9494D1000/U	300 lb-in.	34 Nm	Breakaway – 600 lb-in.	Breakaway – 68.0 Nm				At 120 Vac – 7.2 AFL, 43.2 ALR, 40 VA pilot duty opposite contact; At 240 Vac – 3.6 AFL, 21.6 ALR, 40 VA pilot duty opposite contact	90 degree stroke – 60 seconds, 160 degree stroke – 120 seconds	90 degrees
M9494F1003/U	300 lb-in.	34 Nm	Breakaway – 600 lb-in.	Breakaway – 68.0 Nm	2			At 120 Vac – 7.2 AFL, 43.2 ALR, 40 VA pilot duty opposite contact; At 240 Vac – 3.6 AFL, 21.6 ALR, 40 VA pilot duty opposite contact	90 degree stroke – 60 seconds, 160 degree stroke – 107 seconds	90 degrees

Q100 Butterfly Valve Linkages

Connects V51E valve to M9484 and M9494 Modutrol IV Motors with adapter plate.

- Fits all sizes of V51E Valves. Mounts easily.

Material Number	Linkage Type	Used with Actuator	Includes	Used With
Q100B1006/U	Butterfly Gas Valve	Modutrol Motor	10 3/4 in. Linkage Rod	all sizes V51E Gas Valve

V48A; V88A Diaphragm Gas Valves

Solenoid-operated diaphragm valves provide slow opening and fast closing suitable for controlling natural, LP or manufactured gases. They are normally used on atmospheric boilers, commercial water heaters, and rooftop heaters.

- V48 for line voltage service; V88 for 24 Vac service.
- Close firmly with diaphragm that is both weight and spring loaded.
- Two second maximum closing time.
- Valve closes on power failure; recommended for final shutoff service.
- Set opening time with various sized bleed orifices or adjustable bleed valve.
- Use with LP, natural or manufactured gases.
- Made with cast aluminum in straight-through valve pattern.
- Valve position indicator available for 1-1/4 in. V48A2227.

Type of Fuel: Natural; LP; Manufactured
Bleed Tapping: 1/8-27 NPT
Body Pattern: Straight-through
Valve Opening Time: 5 sec max
Valve Closing Time: 2 sec max
Mounting: Upright (horizontal)
Materials: Body – Aluminum
Frequency: 60 Hz
Power Consumption: 9 W; 15 VA max
Electrical Connections: 6 in. Leadwires
Operating Temperature Range: 32°F to 125°F (0°C to 52°C)
Approvals, Underwriters Laboratories Inc.: File No. MH1639, Guide No. YIOZ
Approvals, CSA: Certificate No. 158158-2500005576 (Z21.21-CSA 6.5)

Dimensions in inches (millimeters)

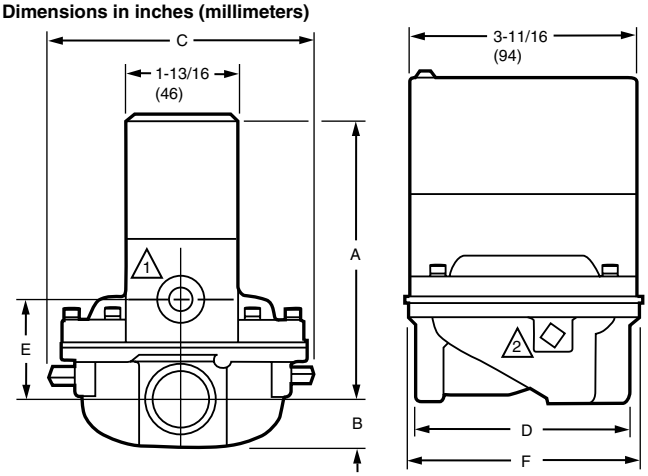

VALVE SIZE (IN.)	APPROXIMATE DIMENSIONS											
	A		B		C		D		E		F	
	IN.	MM	IN.	MM	IN.	MM	IN.	MM	IN.	MM	IN.	MM
3/4	4-11/16	119.1	3/4	19.1	4-5/8	117.5	3-1/2	88.9	1-5/8	41.3	3-13/16	96.8
1	5-1/16	128.6	1	25.4	5	127.0	3-11/16	93.7	2-1/16	52.4	4-5/16	109.5
1-1/4	5-9/16	141.3	1-1/4	31.8	5-7/8	149.2	5-5/16	134.9	2-3/8	60.3	5-5/16	134.9
1-1/2	5-9/16	141.3	1-1/4	31.8	5-7/8	149.2	5-5/16	134.9	2-3/8	60.3	5-5/16	134.9
2	6-15/16	176.2	2-1/4	57.2	9-1/2	241.3	8-3/8	212.7	3-9/16	90.5	5-5/16	236.5
2-1/2	6-15/16	176.2	2-1/4	57.2	9-1/2	241.3	8-3/8	212.7	3-9/16	90.5	9-5/16	236.5
3	6-15/16	176.2	2-1/4	57.2	9-1/2	241.3	8-3/8	212.7	3-9/16	90.5	9-5/16	236.5

1 BLEED TAPPING: 1/8-27 NPT.

2 PILOT TAPING (2): 1/8-27 NPT FOR 3/4 THROUGH 1-1/2 IN. SIZES, 1/4-18 NPT FOR 2 THROUGH 3 IN. SIZES.

M8487A

Material Number	Pipe Size (inch)	Pipe Size (DN)	Pilot Tapping	Voltage	Approximate, Dimensions	Pressure Rating (psi)	Pressure Rating (kPa)	Current Ratings	Comments	Includes
V48A2151/U	3/4 in.	DN20	1/8-27 NPT	120 Vac	5 7/16 in. high x 3 13/16 in. wide x 4 5/8 in. deep (138 mm high x 97 mm wide x 118 mm deep)	1/2 psi	3.4 kPa	0.13 max amps at rated Vac/Hz		Ground terminal
V48A2169/U	1 in.	DN25	1/8-27 NPT	120 Vac	6 1/16 in. high x 4 5/16 in. wide x 5 in. deep (154 mm high x 127 mm wide x 109 mm deep)	1/2 psi	3.4 kPa	0.13 max amps at rated Vac/Hz		Ground terminal
V48A2177/U	1 1/4 in.	DN32	1/8-27 NPT	120 Vac	6 13/16 in. high x 5 5/16 in. wide x 5 7/8 in. deep (173 mm high x 135 mm wide x 149 mm deep)	1/2 psi	3.4 kPa	0.13 max amps at rated Vac/Hz		Ground terminal
V48A2185/U	1 1/2 in.	DN40	1/8-27 NPT	120 Vac	6 13/16 in. high x 5 5/16 in. wide x 5 7/8 in. deep (173 mm high x 135 mm wide x 149 mm deep)	1/2 psi	3.4 kPa	0.13 max amps at rated Vac/Hz		Ground terminal
V48A2227/U	1 1/4 in.	DN32	1/8-27 NPT	120 Vac	6 13/16 in. high x 5 5/16 in. wide x 5 7/8 in. deep (173 mm high x 135 mm wide x 149 mm deep)	1 psi	6.9 kPa	0.13 max amps at rated Vac/Hz	Includes position indicator	Ground terminal
V48A2243/U	2 in.	DN50	1/4-18 NPT	120 Vac	9 3/16 in. high x 9 5/16 in. wide x 9 1/2 in. deep (233 mm high x 237 mm wide x 241 mm deep)	1 psi	6.9 kPa	0.13 max amps at rated Vac/Hz		Ground terminal
V48A2250/U	2 1/2 in.	DN65	1/4-18 NPT	120 Vac	9 3/16 in. high x 9 5/16 in. wide x 9 1/2 in. deep (233 mm high x 237 mm wide x 241 mm deep)	1 psi	6.9 kPa	0.13 max amps at rated Vac/Hz		Ground terminal

Diaphragm Gas Valves

Material Number	Pipe Size (inch)	Pipe Size (DN)	Pilot Tapping	Voltage	Approximate, Dimensions	Pressure Rating (psi)	Pressure Rating (kPa)	Current Ratings	Comments	Includes
V48A2268/U	3 in.	DN80	1/4-18 NPT	120 Vac	9 3/16 in. high x 9 5/16 in. wide x 9 1/2 in. deep (233 mm high x 237 mm wide x 241 mm deep)	1 psi	6.9 kPa	0.13 max amps at rated Vac/Hz		Ground terminal
V48A2276/U	1 1/2 in.	DN40	1/8-27 NPT	120 Vac	6 13/16 in. high x 5 5/16 in. wide x 5 7/8 in. deep (173 mm high x 135 mm wide x 149 mm deep)	1 psi	6.9 kPa	0.13 max amps at rated Vac/Hz		Ground terminal
V48A2334/U	1 in.	DN25	1/8-27 NPT	120 Vac	6 1/16 in. high x 4 5/16 in. wide x 5 in. deep (154 mm high x 127 mm wide x 109 mm deep)	1 psi	6.9 kPa	0.13 max amps at rated Vac/Hz		Ground terminal
V48A2342/U	1 1/4 in.	DN32	1/8-27 NPT	120 Vac	6 13/16 in. high x 5 5/16 in. wide x 5 7/8 in. deep (173 mm high x 135 mm wide x 149 mm deep)	1 psi	6.9 kPa	0.13 max amps at rated Vac/Hz		Ground terminal
V88A1618/U	1 in.	DN25	1/8-27 NPT	24 Vac	6 1/16 in. high x 4 5/16 in. wide x 5 in. deep (154 mm high x 127 mm wide x 109 mm deep)	1/2 psi	3.4 kPa	0.62 max amps at rated Vac/Hz		
V88A1626/U	1 1/4 in.	DN32	1/8-27 NPT	24 Vac	6 13/16 in. high x 5 5/16 in. wide x 5 7/8 in. deep (173 mm high x 135 mm wide x 149 mm deep)	1/2 psi	3.4 kPa	0.62 max amps at rated Vac/Hz		
V88A1634/U	1 1/2 in.	DN40	1/8-27 NPT	24 Vac	6 13/16 in. high x 5 5/16 in. wide x 5 7/8 in. deep (173 mm high x 135 mm wide x 149 mm deep)	1/2 psi	3.4 kPa	0.62 max amps at rated Vac/Hz		
V88A1659/U	3/4 in.	DN20	1/8-27 NPT	24 Vac	5 7/16 in. high x 3 13/16 in. wide x 4 5/8 in. deep (138 mm high x 97 mm wide x 118 mm deep)	1/2 psi	3.4 kPa	0.62 max amps at rated Vac/Hz		
V88A1667/U	3/4 in.	DN20	1/8-27 NPT	24 Vac	5 7/16 in. high x 3 13/16 in. wide x 4 5/8 in. deep (138 mm high x 97 mm wide x 118 mm deep)	1 psi	6.9 kPa	0.62 max amps at rated Vac/Hz		
V88A1675/U	1 in.	DN25	1/8-27 NPT	24 Vac	6 1/16 in. high x 4 5/16 in. wide x 5 in. deep (154 mm high x 127 mm wide x 109 mm deep)	1 psi	6.9 kPa	0.62 max amps at rated Vac/Hz		
V88A1683/U	1 1/4 in.	DN32	1/8-27 NPT	24 Vac	6 13/16 in. high x 5 5/16 in. wide x 5 7/8 in. deep (173 mm high x 135 mm wide x 149 mm deep)	1 psi	6.9 kPa	0.62 max amps at rated Vac/Hz		
V88A1691/U	1 1/2 in.	DN40	1/8-27 NPT	24 Vac	6 13/16 in. high x 5 5/16 in. wide x 5 7/8 in. deep (173 mm high x 135 mm wide x 149 mm deep)	1 psi	6.9 kPa	0.62 max amps at rated Vac/Hz		
V88A1709/U	2 in.	DN50	1/4-18 NPT	24 Vac	9 3/16 in. high x 9 5/16 in. wide x 9 1/2 in. deep (233 mm high x 237 mm wide x 241 mm deep)	1 psi	6.9 kPa	0.62 max amps at rated Vac/Hz		
V88A1717/U	2 1/2 in.	DN65	1/4-18 NPT	24 Vac	9 3/16 in. high x 9 5/16 in. wide x 9 1/2 in. deep (233 mm high x 237 mm wide x 241 mm deep)	1 psi	6.9 kPa	0.62 max amps at rated Vac/Hz		

V48J; V88J High Temperature Diaphragm Gas Valves

Solenoid-operated diaphragm valves provide slow opening and fast closing suitable for controlling natural, LP or manufactured gases. They are normally used on atmospheric boilers, commercial water heaters, and rooftop heaters.

- Rated for 150°F (66°C) maximum temperature applications.
- V48 for line voltage service; V88 for 24 Vac service.
- Close firmly with diaphragm that is both weight and spring loaded.
- Two second maximum closing time.
- Valve closes on power failure; recommended for final shutoff service.
- Set opening time with various sized bleed orifices or adjustable bleed valve.
- Use with LP, natural or manufactured gases.
- Made with cast aluminum in straight-through valve pattern.

Type of Fuel: Natural; LP; Manufactured
Bleed Tapping: 1/8-27 NPT
Pilot Tapping: 1/8-27 NPT
Body Pattern: Straight-through
Valve Opening Time: 5 sec max
Valve Closing Time: 2 sec max
Mounting: Upright (horizontal)
Materials: Body – Aluminum
Frequency: 60 Hz
Electrical Connections: 6 in. Leadwires
Operating Temperature Range: 32°F to 150°F (0°C to 66°C)
Approvals, Underwriters Laboratories Inc.: File No. MH1639, Guide No. YIOZ
Approvals, CSA: Certificate No. 158158-2500005576 (Z21.21-CSA 6.5)
Pressure Ratings (psi): 1 psi
Pressure Ratings (kPa): 6.9 kPa
Current Ratings: 0.62 max amps at rated Vac/Hz

Dimensions in inches (millimeters)

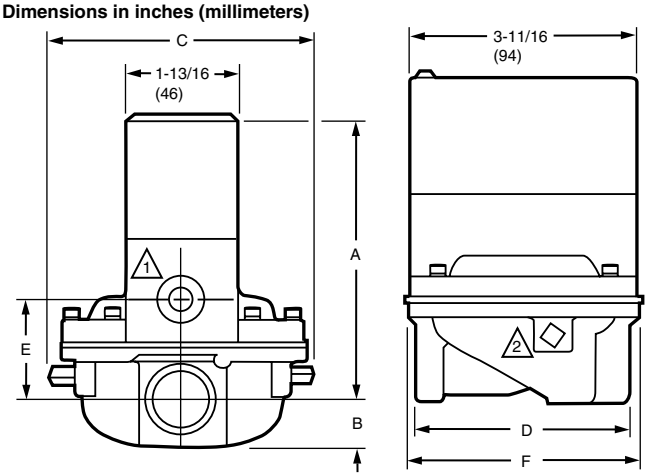

VALVE SIZE (IN.)	APPROXIMATE DIMENSIONS											
	A		B		C		D		E		F	
	IN.	MM	IN.	MM	IN.	MM	IN.	MM	IN.	MM	IN.	MM
3/4	4-11/16	119.1	3/4	19.1	4-5/8	117.5	3-1/2	88.9	1-5/8	41.3	3-13/16	96.8
1	5-1/16	128.6	1	25.4	5	127.0	3-11/16	93.7	2-1/16	52.4	4-5/16	109.5
1-1/4	5-9/16	141.3	1-1/4	31.8	5-7/8	149.2	5-5/16	134.9	2-3/8	60.3	5-5/16	134.9
1-1/2	5-9/16	141.3	1-1/4	31.8	5-7/8	149.2	5-5/16	134.9	2-3/8	60.3	5-5/16	134.9
2	6-15/16	176.2	2-1/4	57.2	9-1/2	241.3	8-3/8	212.7	3-9/16	90.5	5-5/16	236.5
2-1/2	6-15/16	176.2	2-1/4	57.2	9-1/2	241.3	8-3/8	212.7	3-9/16	90.5	9-5/16	236.5
3	6-15/16	176.2	2-1/4	57.2	9-1/2	241.3	8-3/8	212.7	3-9/16	90.5	9-5/16	236.5

1 BLEED TAPPING: 1/8-27 NPT.

2 PILOT TAPING (2): 1/8-27 NPT FOR 3/4 THROUGH 1-1/2 IN. SIZES, 1/4-18 NPT FOR 2 THROUGH 3 IN. SIZES.

M8487A

Material Number	Pipe Size (inch)	Pipe Size (DN)	Voltage	Approximate, Dimensions	Power Consumption
V88J1006/U	1 in.	DN25	24 Vac	6 1/16 in. high x 4 5/16 in. wide x 5 in. deep (154 mm high x 127 mm wide x 109 mm deep)	9 W; 15 VA max
V88J1022/U	1 1/4 in.	DN32	24 Vac	6 13/16 in. high x 5 5/16 in. wide x 5 7/8 in. deep (173 mm high x 135 mm wide x 149 mm deep)	9 W; 15 VA max

V4943/V8943A On/Off Diaphragm Gas Valves

V4943A/V8943A are on/off diaphragm gas valve used on boilers, unit heaters, duct furnaces, makeup air and rooftop heaters.

- Designed for replacement for V4843A/V8843A Gas Valves.
- Suitable for use on atmospheric boilers, commercial water heaters, and rooftop heaters.
- V8943A/V4943A models are solenoid-operated diaphragm valves for on/off flow control of natural or LP gas.
- Valve body of die-cast aluminum with a straight-through pattern.
- V4943 are used with line voltage, on/off controllers; V8943A are used with 24 Vac thermostats or controllers.
- Valve closes on power failure; recommended for final shutoff service.

Type of Fuel: Natural; LP
Bleed Tapping: Internal Bleed
Pilot Tapping: 1/8-27 NPT
Body Pattern: Straight-through, non-offset
Opening Characteristics: Rapid Opening On-Off
Valve Opening Time: 6 sec max
Valve Closing Time: 3 sec max
Mounting: Upright (horizontal)
Materials: Body – Aluminum
Frequency: 60 Hz
Electrical Connections: 1/4 in. (6 mm) spade terminals (quick connects). 30 in. (762 mm) leadwires and cover for electrical conduit connection provided.

Operating Temperature Range: -40°F to +150°F (-40°C to +66°C)
Approvals, Underwriters Laboratories Inc.: File No. MH1639, Guide No. YIOZ (60 Hz only)
Approvals, CSA: Certificate No. 158158-1042930, Guide No. 3371-03, 83 (Z21.21, Z21.78)
Pressure Ratings (psi): 1/2 psi
Pressure Ratings (kPa): 3.4 kPa
Comments: (2) 30" leadwires
Current Ratings: 0.055 max amps at rated Vac/Hz

Dimensions in inches (millimeters)

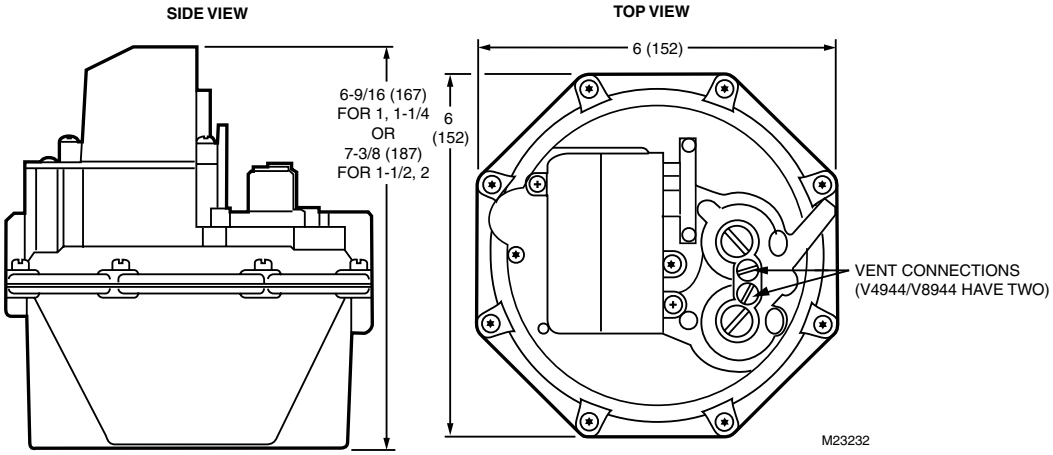

Material Number	Pipe Size (inch)	Pipe Size (DN)	Voltage	Approximate, Dimensions	Power Consumption
V4943A1011/U	1 in.	DN25	120 Vac	6 9/16 in. high x 6 in. wide x 6 in. deep (167 mm high x 152 mm wide x 152 mm deep)	6 VA max
V4943A1029/U	1 1/4 in.	DN32	120 Vac	6 9/16 in. high x 6 in. wide x 6 in. deep (167 mm high x 152 mm wide x 152 mm deep)	6 VA max
V4943A1037/U	1 1/2 in.	DN40	120 Vac	7 3/8 in. high x 6 in. wide x 6 in. deep (187 mm high x 152 mm wide x 152 mm deep)	6 VA max
V4943A1045/U	2 in.	DN50	120 Vac	7 3/8 in. high x 6 in. wide x 6 in. deep (187 mm high x 152 mm wide x 152 mm deep)	6 VA max
V8943A1012/U	1 in.	DN25	24 Vac	6 9/16 in. high x 6 in. wide x 6 in. deep (167 mm high x 152 mm wide x 152 mm deep)	8 VA max
V8943A1020/U	1 1/4 in.	DN32	24 Vac	6 9/16 in. high x 6 in. wide x 6 in. deep (167 mm high x 152 mm wide x 152 mm deep)	8 VA max
V8943A1038/U	1 1/2 in.	DN40	24 Vac	7 3/8 in. high x 6 in. wide x 6 in. deep (187 mm high x 152 mm wide x 152 mm deep)	8 VA max
V8943A1046/U	2 in.	DN50	24 Vac	7 3/8 in. high x 6 in. wide x 6 in. deep (187 mm high x 152 mm wide x 152 mm deep)	8 VA max

V4943/V8943B, C, N Single Stage Pressure Regulating Valves

V4943B, N/8943B, C, N are Single-stage Pressure Regulating Valves. These valves are used on boilers, unit heaters, duct furnaces, makeup air and rooftop heaters.

- Designed for replacement for V4843/V8843 Gas Valves.
- Suitable for use on atmospheric boilers, commercial water heaters, and rooftop heaters.
- V4943/V8943B, C, N models are solenoid-operated diaphragm valves that combine the functions of safety shutoff and pressure regulation in a single unit.
- V4943/V8943B, N are for use with natural gas.
- V4943/V8943C are for use with LP gas.
- Valve body of die-cast aluminum with a straight-through pattern.
- V4943 are used with line voltage, on/off controllers; V8943 are used with 24 Vac thermostats or controllers.
- Valve closes on power failure; recommended for final shutoff service.

Bleed Tapping: 5/16-24 UNF
Pilot Tapping: 1/8-27 NPT
Body Pattern: Straight-through, non-offset
Valve Closing Time: 2 sec max
Mounting: Upright (horizontal)
Materials: Body – Aluminum
Frequency: 60 Hz
Electrical Connections: 1/4 in. (6 mm) spade terminals (quick connects). 30 in. (762 mm) leadwires and cover for electrical conduit connection provided.

Operating Temperature Range: -40°F to +150°F (-40°C to +66°C)
Approvals, Underwriters Laboratories Inc.: File No. MH1639, Guide No. YIOZ (60 Hz only)
Approvals, CSA: Certificate No. 158158-1042930, Guide No. 3302-01, 81 (Z21.21, Z21.78)
Pressure Ratings (psi): 1/2 psi
Pressure Ratings (kPa): 3.4 kPa
Comments: (2) 30" leadwires

Dimensions in inches (millimeter)

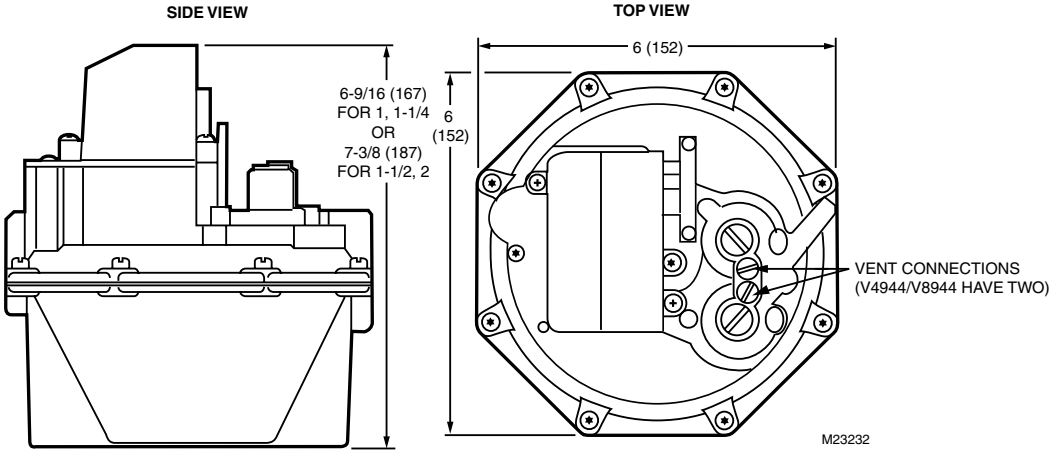

Material Number	Type of Fuel	Pipe Size (inch)	Pipe Size (DN)	Opening Characteristics	Voltage	Approximate, Dimensions	Valve Opening Time	Current Ratings	Pressure Regulator Setpoint (in. wc)	Power Consumption
V4943B1019/U	Natural	1 in.	DN25	Slow Opening 1-stage	120 Vac	6 9/16 in. high x 6 in. wide x 6 in. deep (167 mm high x 152 mm wide x 152 mm deep)	3 to 25 sec	0.055 max amps at rated Vac/Hz	Adj. Range, High Fire – 3 in. wc to 4.5 in. wc; Factory Setting, High Fire – 3.5 in. wc	6.6 VA max; 6.6 VA
V4943B1027/U	Natural	1 1/4 in.	DN32	Slow Opening 1-stage	120 Vac	6 9/16 in. high x 6 in. wide x 6 in. deep (167 mm high x 152 mm wide x 152 mm deep)	3 to 25 sec	0.055 max amps at rated Vac/Hz	Adj. Range, High Fire – 3 in. wc to 4.5 in. wc; Factory Setting, High Fire – 3.5 in. wc	6.6 VA max
V4943B1035/U	Natural	1 1/2 in.	DN40	Slow Opening 1-stage	120 Vac	7 3/8 in. high x 6 in. wide x 6 in. deep (187 mm high x 152 mm wide x 152 mm deep)	3 to 25 sec	0.055 max amps at rated Vac/Hz	Adj. Range, High Fire – 3 in. wc to 4.5 in. wc; Factory Setting, High Fire – 3.5 in. wc	6.6 VA max
V4943B1043/U	Natural	2 in.	DN50	Slow Opening 1-stage	120 Vac	7 3/8 in. high x 6 in. wide x 6 in. deep (187 mm high x 152 mm wide x 152 mm deep)	3 to 25 sec	0.055 max amps at rated Vac/Hz	Adj. Range, High Fire – 3 in. wc to 4.5 in. wc; Factory Setting, High Fire – 3.5 in. wc	6.6 VA max
V4943N1012/U	Natural	1 in.	DN25	Rapid Opening 1-stage	120 Vac	6 9/16 in. high x 6 in. wide x 6 in. deep (167 mm high x 152 mm wide x 152 mm deep)	6 sec max	0.055 max amps at rated Vac/Hz	Adj. Range, High Fire – 3 in. wc to 4.5 in. wc; Factory Setting, High Fire – 3.5 in. wc	6.6 VA max
V4943N1020/U	Natural	1 1/4 in.	DN32	Rapid Opening 1-stage	120 Vac	6 9/16 in. high x 6 in. wide x 6 in. deep (167 mm high x 152 mm wide x 152 mm deep)	6 sec max	0.055 max amps at rated Vac/Hz	Adj. Range, High Fire – 3 in. wc to 4.5 in. wc; Factory Setting, High Fire – 3.5 in. wc	6.6 VA max

Diaphragm Gas Valves

Material Number	Type of Fuel	Pipe Size (inch)	Pipe Size (DN)	Opening Characteristics	Voltage	Approximate, Dimensions	Valve Opening Time	Current Ratings	Pressure Regulator Setpoint (in. wc)	Power Consumption
V4943N1038/U	Natural	1 1/2 in.	DN40	Rapid Opening 1-stage	120 Vac	7 3/8 in. high x 6 in. wide x 6 in. deep (187 mm high x 152 mm wide x 152 mm deep)	6 sec max	0.055 max amps at rated Vac/Hz	Adj. Range, High Fire – 3 in. wc to 4.5 in. wc; Factory Setting, High Fire – 3.5 in. wc	6.6 VA max
V4943N1046/U	Natural	2 in.	DN50	Rapid Opening 1-stage	120 Vac	7 3/8 in. high x 6 in. wide x 6 in. deep (187 mm high x 152 mm wide x 152 mm deep)	6 sec max	0.055 max amps at rated Vac/Hz	Adj. Range, High Fire – 3 in. wc to 4.5 in. wc; Factory Setting, High Fire – 3.5 in. wc	6.6 VA max
V8943B1010/U	Natural	1 in.	DN25	Slow Opening 1-stage	24 Vac	6 9/16 in. high x 6 in. wide x 6 in. deep (167 mm high x 152 mm wide x 152 mm deep)	3 to 25 sec	0.363 max amps at rated Vac/Hz	Adj. Range, High Fire – 3 in. wc to 4.5 in. wc; Factory Setting, High Fire – 3.5 in. wc	9 VA max
V8943B1028/U	Natural	1 1/4 in.	DN32	Slow Opening 1-stage	24 Vac	6 9/16 in. high x 6 in. wide x 6 in. deep (167 mm high x 152 mm wide x 152 mm deep)	3 to 25 sec	0.363 max amps at rated Vac/Hz	Adj. Range, High Fire – 3 in. wc to 4.5 in. wc; Factory Setting, High Fire – 3.5 in. wc	9 VA max
V8943B1036/U	Natural	1 1/2 in.	DN40	Slow Opening 1-stage	24 Vac	7 3/8 in. high x 6 in. wide x 6 in. deep (187 mm high x 152 mm wide x 152 mm deep)	3 to 25 sec	0.363 max amps at rated Vac/Hz	Adj. Range, High Fire – 3 in. wc to 4.5 in. wc; Factory Setting, High Fire – 3.5 in. wc	9 VA max
V8943B1044/U	Natural	2 in.	DN50	Slow Opening 1-stage	24 Vac	7 3/8 in. high x 6 in. wide x 6 in. deep (187 mm high x 152 mm wide x 152 mm deep)	3 to 25 sec	0.363 max amps at rated Vac/Hz	Adj. Range, High Fire – 3 in. wc to 4.5 in. wc; Factory Setting, High Fire – 3.5 in. wc	9 VA max
V8943C1018/U	LP	1 in.	DN25	Slow Opening 1-stage	24 Vac	6 9/16 in. high x 6 in. wide x 6 in. deep (167 mm high x 152 mm wide x 152 mm deep)	3 to 25 sec	0.363 max amps at rated Vac/Hz	Adj. Range, High Fire – 8.8 in. wc to 11.5 in. wc; Factory Setting, High Fire – 10.0 in. wc	9 VA max
V8943C1026/U	LP	1 1/4 in.	DN32	Slow Opening 1-stage	24 Vac	6 9/16 in. high x 6 in. wide x 6 in. deep (167 mm high x 152 mm wide x 152 mm deep)	3 to 25 sec	0.363 max amps at rated Vac/Hz	Adj. Range, High Fire – 8.8 in. wc to 11.5 in. wc; Factory Setting, High Fire – 10.0 in. wc	9 VA max
V8943N1013/U	Natural	1 in.	DN25	Rapid Opening 1-stage	24 Vac	6 9/16 in. high x 6 in. wide x 6 in. deep (167 mm high x 152 mm wide x 152 mm deep)	6 sec max	0.363 max amps at rated Vac/Hz	Adj. Range, High Fire – 3 in. wc to 4.5 in. wc; Factory Setting, High Fire – 3.5 in. wc	9 VA max
V8943N1021/U	Natural	1 1/4 in.	DN32	Rapid Opening 1-stage	24 Vac	6 9/16 in. high x 6 in. wide x 6 in. deep (167 mm high x 152 mm wide x 152 mm deep)	6 sec max	0.363 max amps at rated Vac/Hz	Adj. Range, High Fire – 3 in. wc to 4.5 in. wc; Factory Setting, High Fire – 3.5 in. wc	9 VA max
V8943N1039/U	Natural	1 1/2 in.	DN40	Rapid Opening 1-stage	24 Vac	7 3/8 in. high x 6 in. wide x 6 in. deep (187 mm high x 152 mm wide x 152 mm deep)	6 sec max	0.363 max amps at rated Vac/Hz	Adj. Range, High Fire – 3 in. wc to 4.5 in. wc; Factory Setting, High Fire – 3.5 in. wc	9 VA max

V4944/V8944B, C, L, N Two Stage Pressure Regulating Gas Valves

V4944B, L, N/8944B, C, L, N are Two-stage Pressure Regulating Gas Valves. These valves are used on boilers, unit heaters, duct furnaces, makeup air and rooftop heaters.

- Designed for replacement for V4844/V8844 Gas Valves.
- Suitable for use on atmospheric boilers, commercial water heaters, and rooftop heaters.
- V4944/V8944B, C, L, N models are solenoid-operated diaphragm valves that combine the functions of safety shutoff and pressure regulation in a single unit.
- V4944/V8944B, N are for use with natural gas.
- V4944/V8944C, L are for use with LP gas.
- Valve body of die-cast aluminum with a straight-through pattern.
- V4944 are used with line voltage, dual-stage controllers; V8944 are used with 24 Vac dual-stage thermostats or controllers.
- Valve closes on power failure; recommended for final shutoff service.

Bleed Tapping: Two 5/16-24 UNF
Pilot Tapping: 1/8-27 NPT
Body Pattern: Straight-through, non-offset
Valve Closing Time: 2 sec max
Mounting: Upright (horizontal)
Materials: Body – Aluminum
Voltage: V4944-120 Vac; V8944-24 Vac
Frequency: 60 Hz
Power Consumption: V4944-9 VA max; V8944-12.4 VA max
Electrical Connections: 1/4 in. (6 mm) spade terminals (quick connects), leadwires and cover for electrical conduit connection provided.

Operating Temperature Range: -40°F to +150°F (-40°C to +66°C)
Approvals, Underwriters Laboratories Inc.: File No. MH1639, Guide No. YIOZ (60 Hz only)
Approvals, CSA: Certificate No. 158158-1042930, Guide No. 3302-01, 81 (Z21.21, Z21.78)
Pressure Ratings (psi): 1/2 psi
Pressure Ratings (kPa): 3.4 kPa
Current Ratings: V4944-0.077 max amps at rated Vac/Hz; V8944-0.516 max amps at rated Vac/Hz

Dimensions in inches (millimeter)

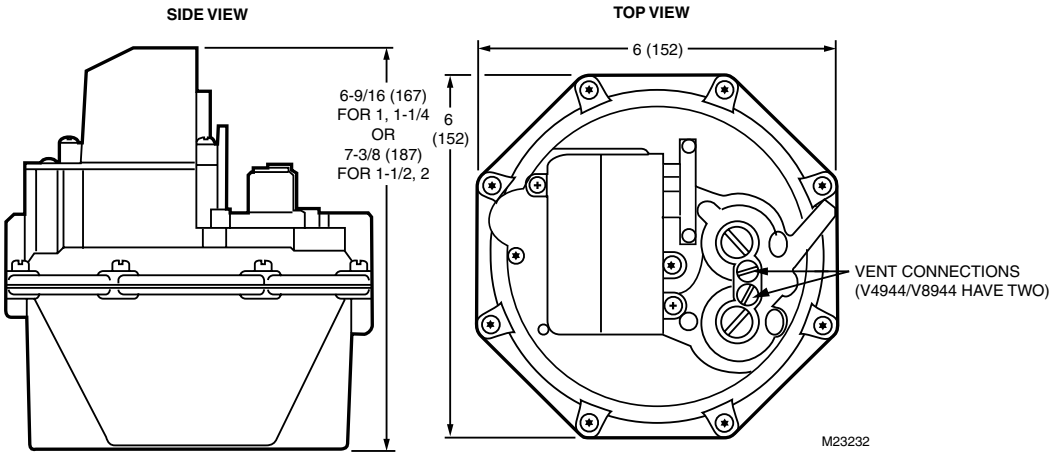

Material Number	Type of Fuel	Pipe Size (inch)	Pipe Size (DN)	Opening Characteristics	Valve Opening Time	Pressure Regulator Setpoint (in. wc)	Comments
V4944B1018/U	Natural	1 in.	DN25	Slow Opening 2-stage	3 to 25 sec	Adj. Range, Low Fire – 0.8 in. wc to 2 in. wc; Adj. Range, High Fire – 3 in. wc to 4.5 in. wc; Factory Setting, Low Fire – 0.8 in. wc; Factory Setting, High Fire – 3.5 in. wc	(3) 30" leadwires
V4944B1026/U	Natural	1 1/4 in.	DN32	Slow Opening 2-stage	3 to 25 sec	Adj. Range, Low Fire – 0.8 in. wc to 2 in. wc; Adj. Range, High Fire – 3 in. wc to 4.5 in. wc; Factory Setting, Low Fire – 0.8 in. wc; Factory Setting, High Fire – 3.5 in. wc	(3) 30" leadwires
V4944B1059/U	Natural	1 in.	DN25	Slow Opening 2-stage	3 to 25 sec	Adj. Range, Low Fire – 0.8 in. wc to 2 in. wc; Adj. Range, High Fire – 3 in. wc to 4.5 in. wc; Factory Setting, Low Fire – 0.7 in. wc; Factory Setting, High Fire – 3.0 in. wc	(3) 30" leadwires
V4944B1075/U	Natural	1 in.	DN25	Slow Opening 2-stage	3 to 25 sec	Adj. Range, Low Fire – 1.6 in. wc to 4. in. wc; Adj. Range, High Fire – 3 in. wc to 4.5 in. wc; Factory Setting, Low Fire – 1.6 in. wc; Factory Setting, High Fire – 3.5 in. wc	
V4944B1091/U	Natural	1 1/2 in.	DN40	Slow Opening 2-stage	3 to 25 sec	Adj. Range, Low Fire – 1.6 in. wc to 4. in. wc; Adj. Range, High Fire – 3 in. wc to 4.5 in. wc; Factory Setting, Low Fire – 1.6 in. wc; Factory Setting, High Fire – 3.5 in. wc	
V4944L1024/U	LP	1 1/4 in.	DN32	Rapid Opening 2-stage	6 sec max	Adj. Range, Low Fire – 1.4 in. wc to 4.2 in. wc; Adj. Range, High Fire – 8.8 in. wc to 11.5 in. wc; Factory Setting, Low Fire – 1.4 in. wc; Factory Setting, High Fire – 10.0 in. wc	(3) 30" leadwires

Diaphragm Gas Valves

Material Number	Type of Fuel	Pipe Size (inch)	Pipe Size (DN)	Opening Characteristics	Valve Opening Time	Pressure Regulator Setpoint (in. wc)	Comments
V4944N1011/U	Natural	1 in.	DN25	Rapid Opening 2-stage	6 sec max	Adj. Range, Low Fire – 0.8 in. wc to 2 in. wc; Adj. Range, High Fire – 3 in. wc to 4.5 in. wc; Factory Setting, Low Fire – 0.8 in. wc; Factory Setting, High Fire – 3.5 in. wc	(3) 30" leadwires
V4944N1029/U	Natural	1 1/4 in.	DN32	Rapid Opening 2-stage	6 sec max	Adj. Range, Low Fire – 0.8 in. wc to 2 in. wc; Adj. Range, High Fire – 3 in. wc to 4.5 in. wc; Factory Setting, Low Fire – 0.8 in. wc; Factory Setting, High Fire – 3.5 in. wc	(3) 30" leadwires
V4944N1037/U	Natural	1 1/2 in.	DN40	Rapid Opening 2-stage	6 sec max	Adj. Range, Low Fire – 0.8 in. wc to 2 in. wc; Adj. Range, High Fire – 3 in. wc to 4.5 in. wc; Factory Setting, Low Fire – 0.8 in. wc; Factory Setting, High Fire – 3.5 in. wc	(3) 30" leadwires
V4944N1045/U	Natural	2 in.	DN50	Rapid Opening 2-stage	6 sec max	Adj. Range, Low Fire – 0.8 in. wc to 2 in. wc; Adj. Range, High Fire – 3 in. wc to 4.5 in. wc; Factory Setting, Low Fire – 0.8 in. wc; Factory Setting, High Fire – 3.5 in. wc	(3) 30" leadwires
V4944N1060/U	Natural	1 1/4 in.	DN32	Rapid Opening 2-stage	6 sec max	Adj. Range, Low Fire – 0.8 in. wc to 2 in. wc; Adj. Range, High Fire – 3 in. wc to 4.5 in. wc; Factory Setting, Low Fire – 1.0 in. wc; Factory Setting, High Fire – 3.0 in. wc	(3) 85" leadwires
V8944B1019/U	Natural	1 in.	DN25	Slow Opening 2-stage	3 to 25 sec	Adj. Range, Low Fire – 0.8 in. wc to 2 in. wc; Adj. Range, High Fire – 3 in. wc to 4.5 in. wc; Factory Setting, Low Fire – 0.8 in. wc; Factory Setting, High Fire – 3.5 in. wc	(3) 30" leadwires
V8944B1027/U	Natural	1 1/4 in.	DN32	Slow Opening 2-stage	3 to 25 sec	Adj. Range, Low Fire – 0.8 in. wc to 2 in. wc; Adj. Range, High Fire – 3 in. wc to 4.5 in. wc; Factory Setting, Low Fire – 0.8 in. wc; Factory Setting, High Fire – 3.5 in. wc	(3) 30" leadwires
V8944B1035/U	Natural	1 1/2 in.	DN40	Slow Opening 2-stage	3 to 25 sec	Adj. Range, Low Fire – 0.8 in. wc to 2 in. wc; Adj. Range, High Fire – 3 in. wc to 4.5 in. wc; Factory Setting, Low Fire – 0.8 in. wc; Factory Setting, High Fire – 3.5 in. wc	(3) 30" leadwires
V8944B1043/U	Natural	2 in.	DN50	Slow Opening 2-stage	3 to 25 sec	Adj. Range, Low Fire – 0.8 in. wc to 2 in. wc; Adj. Range, High Fire – 3 in. wc to 4.5 in. wc; Factory Setting, Low Fire – 0.8 in. wc; Factory Setting, High Fire – 3.5 in. wc	(3) 30" leadwires
V8944C1017/U	LP	1 in.	DN25	Slow Opening 2-stage	3 to 25 sec	Adj. Range, Low Fire – 1.4 in. wc to 4.2 in. wc; Adj. Range, High Fire – 8.8 in. wc to 11.5 in. wc; Factory Setting, Low Fire – 1.4 in. wc; Factory Setting, High Fire – 10.0 in. wc	(3) 30" leadwires
V8944C1025/U	LP	1 1/4 in.	DN32	Slow Opening 2-stage	3 to 25 sec	Adj. Range, Low Fire – 1.4 in. wc to 4.2 in. wc; Adj. Range, High Fire – 8.8 in. wc to 11.5 in. wc; Factory Setting, Low Fire – 1.4 in. wc; Factory Setting, High Fire – 10.0 in. wc	(3) 30" leadwires
V8944C1033/U	LP	1 1/2 in.	DN40	Slow Opening 2-stage	3 to 25 sec	Adj. Range, Low Fire – 1.4 in. wc to 4.2 in. wc; Adj. Range, High Fire – 8.8 in. wc to 11.5 in. wc; Factory Setting, Low Fire – 1.4 in. wc; Factory Setting, High Fire – 10.0 in. wc	(3) 30" leadwires
V8944N1012/U	Natural	1 in.	DN25	Rapid Opening 2-stage	6 sec max	Adj. Range, Low Fire – 0.8 in. wc to 2 in. wc; Adj. Range, High Fire – 3 in. wc to 4.5 in. wc; Factory Setting, Low Fire – 0.8 in. wc; Factory Setting, High Fire – 3.5 in. wc	(3) 30" leadwires
V8944N1020/U	Natural	1 1/4 in.	DN32	Rapid Opening 2-stage	6 sec max	Adj. Range, Low Fire – 0.8 in. wc to 2 in. wc; Adj. Range, High Fire – 3 in. wc to 4.5 in. wc; Factory Setting, Low Fire – 0.8 in. wc; Factory Setting, High Fire – 3.5 in. wc	(3) 30" leadwires
V8944N1038/U	Natural	1 1/2 in.	DN40	Rapid Opening 2-stage	6 sec max	Adj. Range, Low Fire – 0.8 in. wc to 2 in. wc; Adj. Range, High Fire – 3 in. wc to 4.5 in. wc; Factory Setting, Low Fire – 0.8 in. wc; Factory Setting, High Fire – 3.5 in. wc	(3) 30" leadwires
V8944N1046/U	Natural	2 in.	DN50	Rapid Opening 2-stage	6 sec max	Adj. Range, Low Fire – 0.8 in. wc to 2 in. wc; Adj. Range, High Fire – 3 in. wc to 4.5 in. wc; Factory Setting, Low Fire – 0.8 in. wc; Factory Setting, High Fire – 3.5 in. wc	(3) 30" leadwires
V8944N1053/U	Natural	1 in.	DN25	Rapid Opening 2-stage	6 sec max	Adj. Range, Low Fire – 0.8 in. wc to 2 in. wc; Adj. Range, High Fire – 3 in. wc to 4.5 in. wc; Factory Setting, Low Fire – 1.2 in. wc; Factory Setting, High Fire – 3.5 in. wc	(3) 30" leadwires
V8944N1061/U	Natural	1 1/4 in.	DN32	Rapid Opening 2-stage	6 sec max	Adj. Range, Low Fire – 0.8 in. wc to 2 in. wc; Adj. Range, High Fire – 3 in. wc to 4.5 in. wc; Factory Setting, Low Fire – 1.2 in. wc; Factory Setting, High Fire – 3.5 in. wc	(3) 30" leadwires

Diaphragm Gas Valve Replacement Parts or Accessories

Material Number	Description	Used With
116930/U	24 Vac, 60 Hz Replacement Coil for V88A Solenoid Operated Valve	V88A
116931/U	120 V/60 Hz Replacement Coil for V48A Solenoid Operated Valve	V48; V48A
116932/U	220-240 V/50-60 Hz Replacement Coil for V48A Solenoid Operated Valve	V48A
118888/U	24V 60 Hz Replacement Coil for V88J	V88J
122160/U	Orifice - .018" for V48, V88	V48, V88
124674/U	Orifice - .011" for V48, V88	V48, V88
126590/U	Adjustable Bleed Valve Assembly for V48, V88, V4004. V8004. 1/8 in. NPT to 1/4 in. compression fitting	V48, V88
204480/U	Regulator vent pipe fitting to be used with V4843/V8843B, C, L, N and V4844/V8844B, C, L, N and V4943/V8943, V4944/V8944	V4843B; V4843C; V4843L; V4843N; V8843B; V8843C; V8843L; V8843N; V4844B; V4844C; V4844L; V4844N; V8844B; V8844C; V8844L; V8844N; V4943; V8943; V4944; V8944

V51 Butterfly Gas/Air Valve

Provides modulating control of natural, manufactured, LP gases or air.

- Use in commercial and industrial installations where large amounts of gas must be closely controlled.
- NOT for use as safety shutoff valve.
- Adaptable to most modulating jobs.
- Modutrol motor, such as the M9484 or M9494, may be mounted directly on valve or close to it.
- Valve mechanism has strain release.
- Adjustable stroke over low fire-high fire range.
- Straight-through valve pattern.
- Rugged cast aluminum body provides durability and maintenance-free operation.

Type of Fuel: Air; natural; manufactured; LP
Body Pattern: Straight-through
Mounting: Motor shaft horizontal
Materials: Body – Aluminum
Operating Temperature Range: 32°F to 140°F (0°C to 60°C)
Approvals, Underwriters Laboratories Inc.: File No. MH5968 Vol. 1 Sec. 1, Guide no. MHKZ
Pressure Ratings (psi): 5 psi
Pressure Ratings (kPa): 34.5 kPa
Used With: Mod Motor with Q100 Linkage

Accessories:
32003396-001/U – V51E mounting kit for 1-1/2 and 2 in. valve actuators includes brackets and hardware
32003396-002/U – V51E mounting kit for 2-1/2, 3 and 4 in. valve actuators includes brackets and hardware
Q100B1006/U – Linkage to connect Modutrol motor to V51E Butterfly Valve. Includes 10 3/4 inch Linkage Rod.

Dimensions in inches (millimeter)

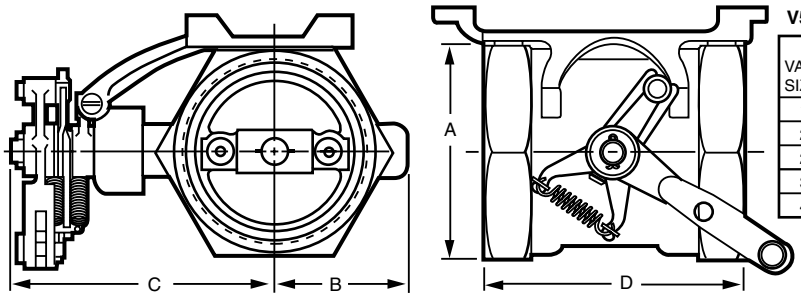

V51E DIMENSIONS

VALVE SIZE (in.)	A (1)		B (1)		C (2)		D (1)	
	in.	mm	in.	mm	in.	mm	in.	mm
1 1/2	2 21/32	67.5	1 9/16	39.7	4 1/4	108.0	3 1/32	77.0
2	3 5/32	80.2	1 13/16	46.0	4 1/4	108.0	3 17/32	89.7
2 1/2	3 27/32	97.6	2 5/16	58.7	4 13/16	122.2	4 23/32	119.9
3	4 1/32	102.4	2 25/64	60.7	5	127.0	4 23/32	119.9
4	5 21/64	135.3	3 5/32	80.2	5 3/8	136.5	5 17/64	133.8

(1) MAXIMUM DIMENSIONS.
(2) NOMINAL DIMENSIONS.

M9532A

Material Number	Pipe Size (inch)	Pipe Size (DN)	Capacity (cfh)	Capacity (m^3/hr)	Pressure Tapping	Approximate, Dimensions
V51E1000/U	1 1/2 in.	DN40	4200 cfh	118.9 m3/hr	Inlet and outlet pressure taps – Two downstream 1/4 in. NPT taps	2 11/16 in. high x 3 1/16 in. wide x 5 13/16 in. deep (68 mm high x 77 mm wide x 148 mm deep)
V51E1018/U	2 in.	DN50	9210 cfh	260.7 m3/hr		3 3/16 in. high x 3 9/16 in. wide x 6 1/16 in. deep (80 mm high x 90 mm wide x 154 mm deep)
V51E1034/U	2 1/2 in.	DN65	8390 cfh	199.8 m3/hr		3 7/8 in. high x 4 3/4 in. wide x 7 1/8 in. deep (98 mm high x 120 mm wide x 181 mm deep)
V51E1059/U	3 in.	DN80	14640 cfh	414.5 m3/hr		4 1/16 in. high x 4 3/4 in. wide x 7 3/8 in. deep (102 mm high x 120 mm wide x 188 mm deep)
V51E1075/U	4 in.	DN100	33000 cfh	934.2 m3/hr		5 3/8 in. high x 5 1/4 in. wide x 8 9/16 in. deep (135 mm high x 134 mm wide x 217 mm deep)

V5197 Integrated Valve Train Butterfly Gas Valve

Dimensions in inches (millimeters)

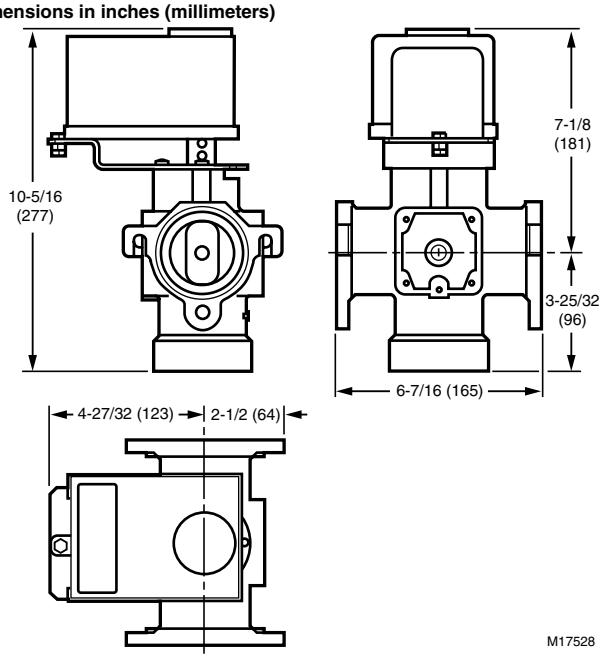

The V5197A valve provides flow control of air, natural gas, liquid petroleum, & manufactured gases which require a high turn down ratio. The adjustment screw controls the maximum flow of gas, but keeps the linear modulating characteristics & stroke.

- Used with air, natural, manufactured or liquefied petroleum (LP) gases.
- For modulating applications that do not require final shutoff service of firing rate valve.
- Two valve body types (small and large) applicable to seven pipe sizes: Small body type for 3/4 in. (19 mm), 1 in. (25 mm), 1-1/4 in. (32 mm), 1-1/2 in. (38 mm) and 2 in. (51 mm) pipes, NPT or ISO 7 threads. Large body type for 2 in. (51 mm), 2-1/2 in. (64 mm) and 3 in. (76 mm) pipes, NPT or ISO 7 threads.
- Two downstream 1/4 in. NPT threaded pressure taps available.
- Accepts C6097 Pressure Switch mounted directly to flange (downstream pressure tap only).
- Unpainted cast aluminum body.
- Suitable for electric or pneumatic operators with the appropriate linkage.
- May be used with manufacturers own linkage and drive motor.
- Flow adjustment screw on bottom of valve controls maximum flow.
- Visual position indicator.

Type of Fuel: Air; natural; manufactured; LP
Pressure Tapping: Inlet and outlet pressure taps – Two downstream 1/4 in. NPT taps
Mounting: Directly bolted to Integrated Valve Train (IVT) components or IVT adapters
Materials: Body – Die-cast aluminum
Operating Temperature Range: -40°F to +150°F (-40°C to +66°C)
Approvals, Underwriters Laboratories Inc.: Component Listed
Approvals, CSA: Design Certified
Approvals, Swiss RE: Acceptable
Pressure Ratings (psi): 15 psi max
Pressure Ratings (kPa): 1 Bar

Material Number	Pipe Size (inch)	Pipe Size (DN)	Capacity (cfh)	Capacity (m^3/hr)	Approximate, Dimensions
V5197A1003	3/4 in.; 1 in.; 1 1/4 in.; 1 1/2 in.; 2 in.	DN20; DN25; DN32; DN40; DN50	2450 cfh for 3/4 in.; 3080 cfh for 1 in.; 4430 cfh for 1 1/4 in.; 5010 cfh for 1 1/2 in.; 5480 cfh for 2 in.	51 mm is 155/ 38 mm is 142/ 32 mm is 125/ 25 mm is 87/ 19 mm is 69	10 5/16 in. high x 6 7/16 in. wide x 7 11/32 in. deep (277 mm high x 165 mm wide x 187 mm deep)
V5197A1011	2 in.; 2 1/2 in.; 3 in.	DN65; DN80; DN50	12,600 cfh for 2 in.; 14,800 cfh for 2 1/2 in.; 16,900 cfh for 3 in.	76 mm is 478/ 64 mm is 419/ 51 mm is 356	12 11/16 in. high x 9 1/4 in. wide x 8 13/16 in. deep (322 mm high x 235 mm wide x 224 mm deep)

Firing Rate Gas Valve Parts

Material Number	Description	Used With
49084/0021/U	Adjusting arm for V51E.	V51E
49085B/U	Strain Release Assembly	V51E

Selection Chart: V5055 and V5097 Industrial Gas Valves with V4055, V4062 or V9055 Fluid Power Actuators

The chart below describes every model of V5055 or V5097 Valve in the left column, and every model of Fluid Power Actuator across the top. While it's possible to combine any valve with any actuator, we've marked the recommended valve/actuator combinations which cover most applications with a •.

Each valve described in the left column is available:

- In these sizes: 3/4 to 3 in. (NPT or parallel BSP). V5055A, B, C are also available in 4 in. size (flange connection only).
- With upstream and/or downstream tap.

Options available on some Fluid Power Actuators include:

- Damper arm shaft, with or without spring return.
- NEMA 4 enclosure.
- Fast or slow open time (13 or 26 seconds).
- Auxiliary switch.
- Valve seal overtravel interlock switch.

For complete specifications and ordering information on V5055 and V5097 Valves and V4055, V4062 and V9055 Fluid Power Actuators, refer to Index for specific page numbers.

Fluid Power Actuators/ Industrial Gas Valves			Standard pressure[a]			High Pressure[a]	
			V5055A, F[b], V5097A	V5055B, V5097B	V5055C, V5097C	V5055D, V5097D	V5055E, V5097E
Type	Model	Pressure Rating[a]	On-Off	Characterized Guide[c]	VSOI[d]	On-Off	VSOI[d]
V4055 On-Off	A, G[e]	Standard	•	•		•	
	B	High	• [f]	• [f]		•	
	D[d] F[d e]	Standard			•		•
	E[d]	High			• [f]		•
V4062 Hi-Lo-Off	A	Standard		•	•		
	B	High		• [f]	• [f]		•
	D[d]	Standard			•		
V9055 Modulating	A	Standard		•			
	D[d]	Standard			•		

[a] Refer to the table below for actual pressure ratings of the various combinations of valves and actuators.
[b] V5055F models meet EN161 leakage requirements.
[c] Characterized guide provides a more linear relationship between stem travel and gas flow. Check Honeywell form 70-8311 to verify that flow curve characteristics match application requirements.
[d] Valve Seal Overtravel Interlock. Valve has two shutoff seals, actuator has a proof-of-closure switch.
[e] V4055F, G models include switch for manual control.
[f] These combinations have higher pressure ratings; see the table below.

The following combinations of V5055 and V5097 Valves, and V4055, V4062 and V9055 Fluid Power Actuators are approved by these agencies.

Underwriters Laboratories, Inc: Listed: MH1639
V4055A/V5055A-E (3/4-4 in.) or V5097A-E (3/4-3 in.).
V4055B/V5055A-E (3/4-4 in.) or V5097A-E (3/4-3 in.).
V4055D/V5055A-E (3/4-4 in.) or V5097A-E (3/4-3 in.).
V4055E/V5055A-E (3/4-4 in.) or V5097A-E (3/4-3 in.).
V4055F/V5055A-E (3/4-4 in.[a]) or V5097A-E (3/4-3 in.).
V4055G/V5055A-E (3/4-4 in.[a]) or V5097A-E (3/4-3 in.).
V4062A, D/V5055A-E (3/4-4 in.) or V5097A-E (3/4-3 in.).
V9055A, D/V5055A, B, C, E (3/4-4 in.) or V5097A-E (3/4-3 in.).

Factory Mutual Approved: Report No. 20698, 20835, 21172 and 24061:

Valve Actuator Approvals:
V4055A/V5055A and V5097A.
V4055D/V5055C and V5097C.
V4055A/V5055B and V5097B.
V4055B/V5055D and V5097D.
V4055E/V5055E and V5097E.
V4055F/V5055C[a] and V5097C.
V4055G/V5055A, B[a] and V5097A, B.
V9055A/V5055B, C and V5097B, C.

[a] Manual reset safety shut-off valves.

Pressure Ratings of Valve-Actuator Combinations

Model	Pipe Size	Standard Pressure Actuators V4055A, D, F, G, V4062A, D, V9055A, D				High Pressure Actuators V4055B, E, V4062B			
		M.O.P.D. [a]		Max. Rated Pressure [b]		M.O.P.D. [a]		Max. Rated Pressure [b]	
Standard Pressure Valves V5055A, B, C, F, V5097A, B, C	3/4" to 1-1/2" [c]	5 PSI	340 mbar	15 PSI	1.0 Bar	15 PSI	1030 mbar	15 PSI	1.0 Bar
	2" to 3" [d]	5 PSI	340 mbar	15 PSI	1.0 Bar	15 PSI	1030 mbar	15 PSI	1.0 Bar
	4" flanged [e]	3 PSI	207 mbar	15 PSI	1.0 Bar	5 PSI	340 mbar	15 PSI	1.0 Bar
High Pressure Valves V5055D, E, V5097D, E	3/4" to 1-1/2" [c]	5 PSI	340 mbar	75 PSI	5.0 Bar	25 PSI	1720 mbar	75 PSI	5.0 Bar
	2" to 3" [d]	5 PSI	340 mbar	45 PSI	3.0 Bar	15 PSI	1030 mbar	45 PSI	3.0 Bar

[a] Max Operating Pressure Differential (UL) or Max Operating Pressure (CSA); maximum allowable pressure drop from inlet to outlet for proper operation.
[b] Max Rated Pressure (UL) or Max Close-off Pressure (CSA); maximum pressure that the valve can be exposed to without leakage or damage to the valve.
[c] Applies for small-body V5097 valves 3/4" up to 2" pipe size.
[d] Applies for large-body V5097 valves 2" up to 3" pipe size.
[e] V5055A, B, C only.

V4055A, B, D, E On-Off Fluid Power Gas Valve Actuator

Use in combination with V5055 or V5097 Gas Valves to control gas supply to commercial and industrial burners.

- Use where smooth light off is important.
- One-second maximum closing time.
- Continuously displays the valve position with a red indicator when open and a yellow indicator when closed.
- Mount in any position directly to valve bonnet with three setscrews.
- Provide final safety shutoff service when used with V5055 or V5097 Gas Valves.

Operating Temperature Ratings: 60 Hz Models: -40°F to +150°F (-40°C to +66°C). 50 Hz, 50/60 Hz Models: -10°F to +158°F (-23°C to +70°C).
Contact Ratings: V4055D, E ONLY-Proof of Closure (Factory Mutual) Switch – 9.8 AFL, 58.8 ALR, 1/2 hp; 4.9 AFL, 29.4 ALR, 1/2 hp
Used With: V5055; V5097 Gas Valves
Approvals, CSA: When used with V5055 and V5097: Certified General listed File No. 158158, Class 3371 for USA and Canada
Approvals, Underwriters Laboratories Inc.: When used with V5055A-E (3/4 to 4 in.) or V5097A-E (3/4 to 3 in.): Listed, File No. MH1639 Guide No. YIOZ
Approvals, Factory Mutual: V4055A-When used with the V5055A, B or V5097A, B: Approved, Report Nos. 20698, 20835, 21172, and 24061; V4055B, D, E-When used with the V5055D or V5097D: Approved, Report Nos. 20698, 20835, 21172, and 24061
Approvals, Swiss RE: When used with V5055 or V5097: Acceptable

Dimensions in inches (millimeters)

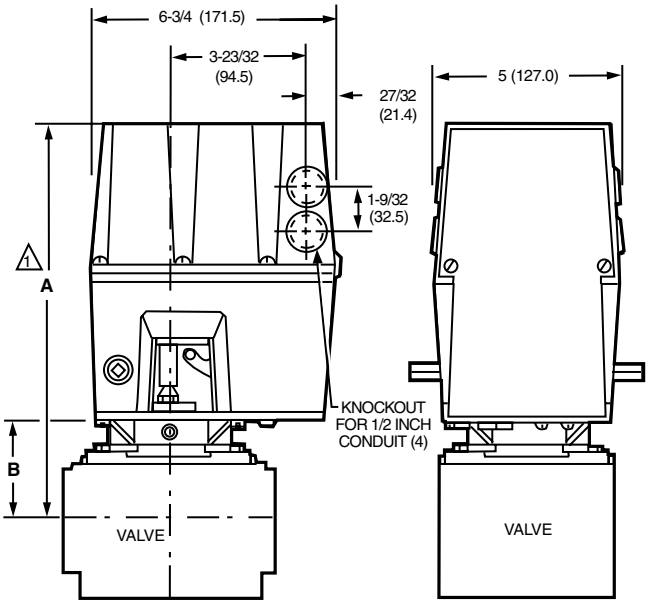

1 ALLOW 4 IN. (101.6 MM) CLEARANCE FOR ACTUATOR REMOVAL.

VALVE SIZE INCH	V5055				V5097			
	DIM A		DIM B		DIM A		DIM B	
	IN.	MM	IN.	MM	IN.	MM	IN.	MM
3/4	11-1/8	282.6	2-3/4	69.9	11-1/8	283	2-3/4	70
1	11-1/8	282.6	2-3/4	69.9	11-1/8	283	2-3/4	70
1-1/4	11-1/8	282.6	2-3/4	69.9	11-1/8	283	2-3/4	70
1-1/2	11-1/8	282.6	2-3/4	69.9	11-1/8	283	2-3/4	70
2	11-1/4	285.8	2-7/8	73.0	11-3/4	298	3-3/8	86
2-1/2	11-3/4	298.5	3-3/8	85.7	11-3/4	298	3-3/8	86
3	11-3/4	298.5	3-3/8	85.7	11-3/4	298	3-3/8	86
4	14-1/8	358.8	5-13/16	147.6	—	—	—	—

M10981A

Material Number	Electrical Ratings	Frequency	Timing	Internal Auxiliary Switch	Maximum Safe Operating Pressure (psi)	Maximum Safe Operating Pressure (kPa)	Auxiliary Switch Ratings	Comments	Includes
V4055A1007/U	120 Vac	60 Hz	Opening – 26 sec; Closing – < 1 sec	No	5 psi	34 kPa			
V4055A1031/U	120 Vac	50 Hz; 60 Hz	Opening – 13 sec; Closing – < 1 sec	No	5 psi	34 kPa			
V4055A1064/U	120 Vac	50 Hz; 60 Hz	Opening – 26 sec; Closing – < 1 sec	No	5 psi	34 kPa			Damper Shaft
V4055A1080/U	240 Vac	50 Hz; 60 Hz	Opening – 26 sec; Closing – < 1 sec	No	5 psi	34 kPa			Damper Shaft
V4055A1098/U	120 Vac	50 Hz; 60 Hz	Opening – 13 sec; Closing – < 1 sec	No	5 psi	34 kPa			Damper Shaft
V4055A1114/U	240 Vac	50 Hz; 60 Hz	Opening – 13 sec; Closing – < 1 sec	No	5 psi	34 kPa			Damper Shaft
V4055A1296/U	120 Vac	60 Hz	Opening – 13 sec; Closing – < 1 sec	Yes - adjusted to 90% stroke	5 psi	34 kPa	120 Vac – 9.8 AFL, 58.8 ALR, 1/2 hp; 240 Vac – 4.9 AFL, 29.4 ALR, 1/2 hp		
V4055A1304/U	120 Vac	60 Hz	Opening – 26 sec; Closing – < 1 sec	No	5 psi	34 kPa			Damper Shaft with return spring installed
V4055A1312/U	120 Vac	60 Hz	Opening – 26 sec; Closing – < 1 sec	No	5 psi	34 kPa		Nema 4 Enclosure	
V4055B1021/U	120 Vac	60 Hz	Opening – 26 sec; Closing – < 1 sec	No	15 or 25 psi	103 or 172 kPa			Damper Shaft
V4055B1039/U	120 Vac	60 Hz	Opening – 13 sec; Closing – < 1 sec	No	15 or 25 psi	103 or 172 kPa			Damper Shaft

Gas Valve Actuators

Material Number	Electrical Ratings	Frequency	Timing	Internal Auxiliary Switch	Maximum Safe Operating Pressure (psi)	Maximum Safe Operating Pressure (kPa)	Auxiliary Switch Ratings	Comments	Includes
V4055B1088/U	220 Vac	50 Hz	Opening – 13 sec; Closing – < 1 sec	No	15 or 25 psi	103 or 172 kPa			
V4055D1001/U	120 Vac	60 Hz	Opening – 26 sec; Closing – < 1 sec	No	5 psi	34 kPa			Damper Shaft
V4055D1019/U	120 Vac	60 Hz	Opening – 13 sec; Closing – < 1 sec	No	5 psi	34 kPa			Damper Shaft
V4055D1027/U	120 Vac	60 Hz	Opening – 13 sec; Closing – < 1 sec	Yes	5 psi	34 kPa	120 Vac – 9.8 AFL, 58.8 ALR, 1/2 hp; 240 Vac – 4.9 AFL, 29.4 ALR, 1/2 hp	Nema 4 Enclosure	
V4055D1035/U	120 Vac	60 Hz	Opening – 13 sec; Closing – < 1 sec	Yes	5 psi	34 kPa	120 Vac – 9.8 AFL, 58.8 ALR, 1/2 hp; 240 Vac – 4.9 AFL, 29.4 ALR, 1/2 hp		
V4055D1043/U	120 Vac	60 Hz	Opening – 13 sec; Closing – < 1 sec	No	5 psi	34 kPa			
V4055E1016/U	120 Vac	60 Hz	Opening – 13 sec; Closing – < 1 sec	No	15 or 25 psi	103 or 172 kPa			Damper Shaft
V4055E1024/U	120 Vac	60 Hz	Opening – 26 sec; Closing – < 1 sec	Yes	15 or 25 psi	103 or 172 kPa	120 Vac – 9.8 AFL, 58.8 ALR, 1/2 hp; 240 Vac – 4.9 AFL, 29.4 ALR, 1/2 hp	Nema 4 Enclosure	Damper Shaft
V4055E1040/U	120 Vac	60 Hz	Opening – 13 sec; Closing – < 1 sec	No	15 or 25 psi	103 or 172 kPa		Nema 4 Enclosure	Damper Shaft

V4055F, G Manual Reset Safety Shut-off Gas Valve Actuators

Provide manual reset, safety shut-off functions as required on FM, IHEA-IRI and NFPA 86A,B,C industrial furnaces, ovens and kilns. Use with V5055 or V5097 Gas Valves to control gas supply.

- Close in one second maximum.
- Continuously displays the valve position with a red indicator when closed.
- Mount directly to valve bonnet with three setscrews.
- Provide final safety shutoff service when used with V5055 or V5097 Gas Valves.

Frequency: 60 Hz
Temperature Range: -40°F to +150°F (-40°C to +66°C)
Approvals, CSA: When used with V5055 and V5097: Certified General listed File No. 158158, Class 3371 for USA and Canada
Approvals, Underwriters Laboratories Inc.: When used with V5055A-E (3/4 to 4 in.) or V5097A-E (3/4 to 3 in.): Listed, File No. MH1639 Guide No. YIOZ
Approvals, Swiss RE: When used with V5055 or V5097: Acceptable

Dimensions in inches (millimeters)

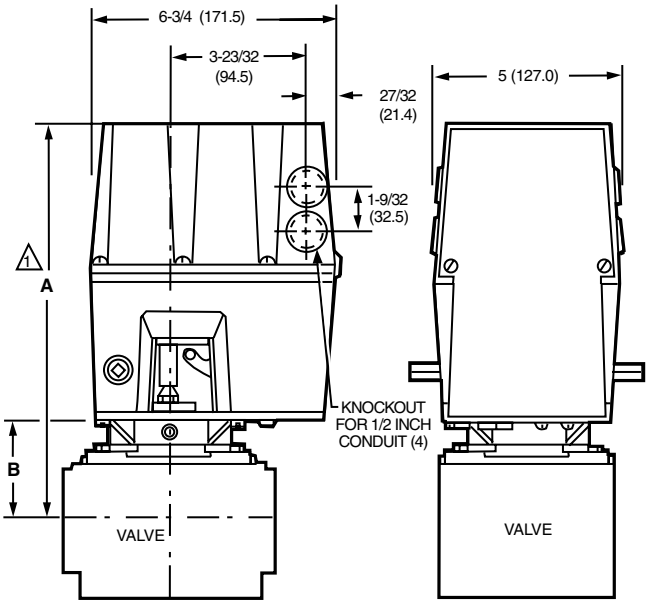

1 ALLOW 4 IN. (101.6 MM) CLEARANCE FOR ACTUATOR REMOVAL.

VALVE SIZE INCH	V5055				V5097			
	DIM A		DIM B		DIM A		DIM B	
	IN.	MM	IN.	MM	IN.	MM	IN.	MM
3/4	11-1/8	282.6	2-3/4	69.9	11-1/8	283	2-3/4	70
1	11-1/8	282.6	2-3/4	69.9	11-1/8	283	2-3/4	70
1-1/4	11-1/8	282.6	2-3/4	69.9	11-1/8	283	2-3/4	70
1-1/2	11-1/8	282.6	2-3/4	69.9	11-1/8	283	2-3/4	70
2	11-1/4	285.8	2-7/8	73.0	11-3/4	298	3-3/8	86
2-1/2	11-3/4	298.5	3-3/8	85.7	11-3/4	298	3-3/8	86
3	11-3/4	298.5	3-3/8	85.7	11-3/4	298	3-3/8	86
4	14-1/8	358.8	5-13/16	147.6	—	—	—	—

M10981A

Material Number	Electrical Ratings	Internal Auxiliary Switch	Timing	Maximum Safe Operating Pressure (psi)	Maximum Safe Operating Pressure (kPa)	Contact Ratings	Description	Approvals, Factory Mutual	Used With
V4055F1006/U	120 Vac	No	Opening – 13 sec; Closing – < 1 sec	5 psi	34 kPa	Proof of Closure (Factory Mutual) Switch – 9.8 AFL, 58.8 ALR, 1/2 hp; 4.9 AFL, 29.4 ALR, 1/2 hp	Manual reset safety shutoff valve with proof of closure switch.	When used with the V5055D or V5097D: Approved, Report Nos. 20698, 20835, 21172, and 24061	V5034; V5055; V5097; VE5000
V4055G1004/U	120 Vac	No	Opening – 13 sec; Closing – < 1 sec	5 psi	34 kPa		Manual ON-OFF actuator normally used with V5055/V5907A, B valve bodies. Low pressure.	When used with the V5055A, B or V5097A, B: Approved, Report Nos. 20698, 20835, 21172, and 24061	V5034; V5055; V5097; VE5000

V4062 Off-Lo-Hi Fluid Power Gas Valve Actuators

Use with V5055 or V5097 Gas Valves to control gas supply for commercial and industrial burners. Valve opens to low fire position when power is applied; valve opens all the way on demand.

- Provide final safety shutoff service when used with V5055 or V5097 gas valve.
- One-second maximum closing time.
- Continuously displays the valve position with a red indicator when open and a yellow indicator when closed.
- Mount in any position directly to valve bonnet with three setscrews.
- Provide final safety shutoff service when used with V5055 or V5097 Gas Valves.

Electrical Ratings: 120 Vac
Frequency: 60 Hz
Maximum Safe Operating Pressure (psi): 5 psi
Maximum Safe Operating Pressure (kPa): 34 kPa
Temperature Range: -40°F to +150°F (-40°C to +66°C)
Used With: V5034; V5055; V5097; VE5000
Approvals, CSA: When used with V5055 and V5097: Certified General listed File No. 158158, Class 3371 for USA and Canada
Approvals, Underwriters Laboratories Inc.: When used with V5055A-E (3/4 to 4 in.) or V5097A-E (3/4 to 3 in.): Listed, File No. MH1639 Guide No. YIOZ
Approvals, Swiss RE: When used with V5055 or V5097: Acceptable

Dimensions in inches (millimeters)

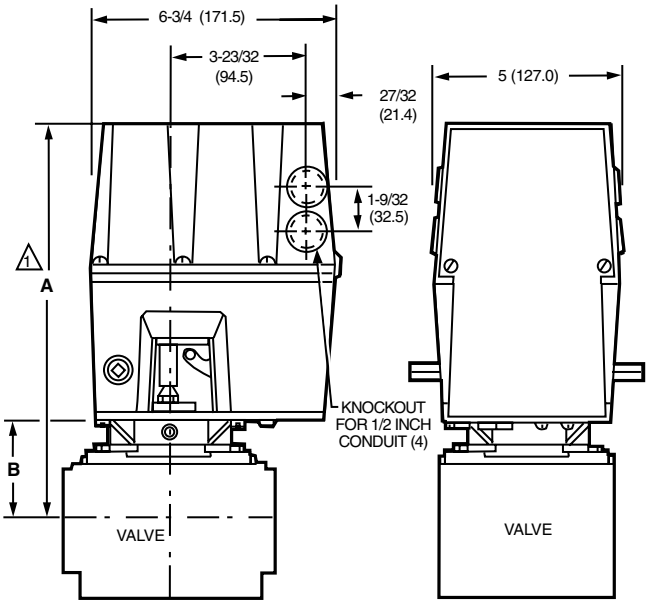

1 ALLOW 4 IN. (101.6 MM) CLEARANCE FOR ACTUATOR REMOVAL.

VALVE SIZE INCH	V5055				V5097			
	DIM A		DIM B		DIM A		DIM B	
	IN.	MM	IN.	MM	IN.	MM	IN.	MM
3/4	11-1/8	282.6	2-3/4	69.9	11-1/8	283	2-3/4	70
1	11-1/8	282.6	2-3/4	69.9	11-1/8	283	2-3/4	70
1-1/4	11-1/8	282.6	2-3/4	69.9	11-1/8	283	2-3/4	70
1-1/2	11-1/8	282.6	2-3/4	69.9	11-1/8	283	2-3/4	70
2	11-1/4	285.8	2-7/8	73.0	11-3/4	298	3-3/8	86
2-1/2	11-3/4	298.5	3-3/8	85.7	11-3/4	298	3-3/8	86
3	11-3/4	298.5	3-3/8	85.7	11-3/4	298	3-3/8	86
4	14-1/8	358.8	5-13/16	147.6	—	—	—	—

M10981A

Material Number	Internal Auxiliary Switch	Timing	Contact Ratings	Auxiliary Switch Range	Description	Comments	Includes
V4062A1008/U	No	Opening – 26 sec; Closing – < 1 sec			Low pressure HI-LO-OFF actuator for use with V5055B and V5097B valve bodies		Damper Shaft
V4062A1123/U	Yes	Opening – 26 sec; Closing – < 1 sec		120 Vac – 9.8 AFL, 58.8 ALR, 1/2 hp; 240 Vac – 4.9 AFL, 29.4 ALR, 1/2 hp	Low pressure HI-LO-OFF actuator for use with V5055B and V5097B valve bodies		Damper Shaft with return spring installed
V4062A1131/U	No	Opening – 13 sec; Closing – < 1 sec			Low pressure HI-LO-OFF actuator for use with V5055B and V5097B valve bodies		Damper Shaft
V4062A1156/U	No	Opening – 26 sec; Closing – < 1 sec			Low pressure HI-LO-OFF actuator for use with V5055B and V5097B valve bodies	For Series 60 Floating Control	
V4062A1198/U	Yes - adjusted to 90 degree stroke	Opening – 13 sec; Closing – < 1 sec		120 Vac – 9.8 AFL, 58.8 ALR, 1/2 hp; 240 Vac – 4.9 AFL, 29.4 ALR, 1/2 hp	Low pressure HI-LO-OFF actuator for use with V5055B and V5097B valve bodies		Damper Shaft with return spring installed
V4062D1002/U	No	Opening – 26 sec; Closing – < 1 sec	Proof of Closure (Factory Mutual) Switch – 9.8 AFL, 58.8 ALR, 1/2 hp; 4.9 AFL, 29.4 ALR, 1/2 hp		HI-LO-OFF actuator with Proof of Closure normally used on V5055C, E/V5907C, E valve bodies (Low Pressure)		Damper Shaft
V4062D1010/U	No	Opening – 13 sec; Closing – < 1 sec	Proof of Closure (Factory Mutual) Switch – 9.8 AFL, 58.8 ALR, 1/2 hp; 4.9 AFL, 29.4 ALR, 1/2 hp		HI-LO-OFF actuator with Proof of Closure normally used on V5055C, E/V5907C, E valve bodies (Low Pressure)		Damper Shaft

V9055 Modulating Fluid Power Gas Valve Actuators

Use with V5055 or V5097 Gas Valves to control gas supply for commercial and industrial burners. Valve opens to low fire position when power is applied; valve opens all the way on demand.

- Include integral shaft to drive combustion air damper in unison with valve.
- One-second maximum closing time.
- Continuously displays the valve position with a red indicator when open and a yellow indicator when closed.
- Mount in any position directly to valve bonnet with three setscrews.
- Provide final safety shutoff service when used with V5055 or V5097 Gas Valves.

Frequency: 60 Hz
Temperature Range: -40°F to +125°F (-40°C to +52°C)
Internal Auxiliary Switch: No
Includes: Damper Shaft
Approvals, CSA: When used with V5055 and V5097: Certified General listed File No. 158158, Class 3371 for USA and Canada
Approvals, Underwriters Laboratories Inc.: When used with V5055A, B, C, E (3/4 to 4 in.) or V5097A-E (3/4 to 3 in.) Listed MH1696
Approvals, Swiss RE: When used with V5055 or V5097: Acceptable

Accessories:
203422C/U – 4-20 ma Adapter for V9055

Material Number	Electrical Ratings	Comments	Timing	Maximum Safe Operating Pressure (psi)	Maximum Safe Operating Pressure (kPa)	Contact Ratings	Description	Approvals, Factory Mutual	Used With
V9055A1055/U	120 Vac		Opening – 26 sec; Closing – < 1 sec	5 psi	34 kPa		Low pressure Modulating-OFF actuator for use with V5055B valve bodies	When used with the V5055B, C or V5097B, C: Approved, Report Nos. 20698, 20835, 21172, and 24061	V5034; V5055; V5097; VE5000
V9055A1063/U	120 Vac	Nema 4 Enclosure	Opening – 26 sec; Closing – < 1 sec	5 psi	34 kPa		Low pressure Modulating-OFF actuator for use with V5055B valve bodies	When used with the V5055B, C or V5097B, C: Approved, Report Nos. 20698, 20835, 21172, and 24061	V5034; V5055; V5097; VE5000
V9055D1000/U	120 Vac		Opening – 26 sec; Closing – < 1 sec	5 psi	34 kPa	Proof of Closure (Factory Mutual) Switch – 9.8 AFL, 58.8 ALR, 1/2 hp; 4.9 AFL, 29.4 ALR, 1/2 hp	Low pressure Modulating-OFF actuator with Proof of Closure normally used on V5055C, E/V5907C, E valve bodies.		V5034; V5055; V5097; VE5000

Gas Valve Actuators

Dimensions in inches (millimeters)

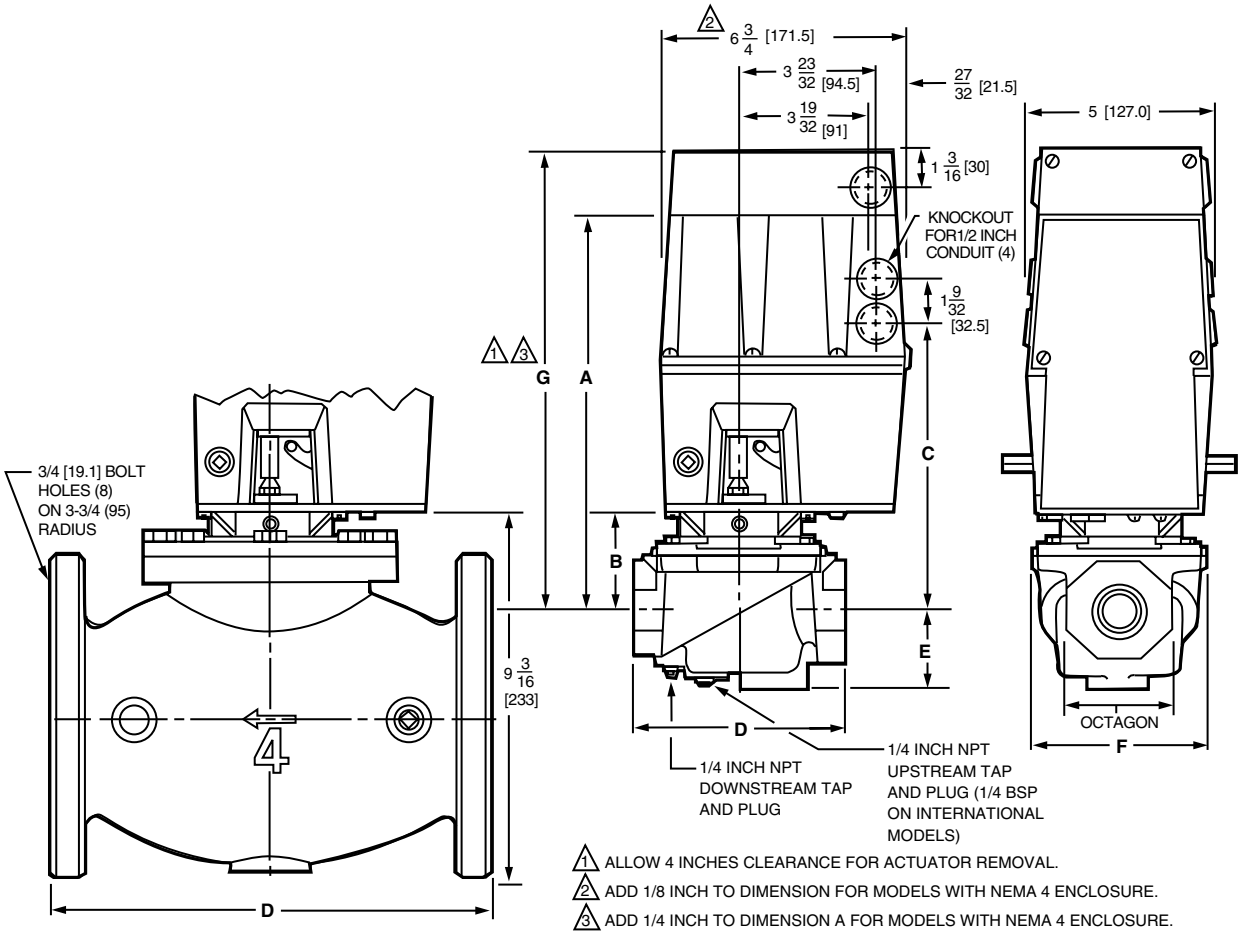

VALVE SIZE	DIM A		DIM B		DIM C		DIM D		DIM E		DIM F		DIM G		OCTAGON	
INCH	IN.	MM	IN.	MM	IN.	MM	IN.	MM	IN.	MM	IN.	MM	IN.	MM	IN.	MM
3/4	11-1/8	282.6	2-3/4	69.9	8-3/16	208.0	5-3/4	146.1	2-1/4	57.2	4-13/16	122.2	13-1/8	333.4	2-13/16	71.4
1	11-1/8	282.6	2-3/4	69.9	8-3/16	208.0	5-3/4	146.1	2-1/4	57.2	4-13/16	122.2	13-1/8	333.4	2-13/16	71.4
1-1/4	11-1/8	282.6	2-3/4	69.9	8-3/16	208.0	5-3/4	146.1	2-1/4	57.2	4-13/16	122.2	13-1/8	333.4	2-13/16	71.4
1-1/2	11-1/8	282.6	2-3/4	69.9	8-3/16	208.0	5-3/4	146.1	2-1/4	57.2	4-13/16	122.2	13-1/8	333.4	2-13/16	71.4
2	11-1/4	285.8	2-7/8	73.0	8-5/16	211.1	8-3/8	212.7	2-3/4	69.9	7-19/32	192.9	13-1/4	336.5	3-1/2	88.9
2-1/2	11-3/4	298.5	3-3/8	85.7	8-13/16	223.8	9-1/4	235.0	2-3/4	69.9	7-19/32	192.9	13-3/4	349.3	4-1/2	114.3
3	11-3/4	298.5	3-3/8	85.7	8-13/16	223.8	9-1/4	235.0	2-3/4	69.9	7-19/32	192.9	13-3/4	349.3	4-1/2	114.3
4	14-1/8	358.8	5-13/16	147.6	11-7/32	285.0	12-1/2	317.5	4-5/8	117.5	—	—	16-3/16	411.0	—	—

M7321

Fluid Actuator Accessories and Parts

Material Number	Description	Used With
133568/U	Auxiliary Switch (Adjustable Valve Position) for V4055, V4062 or V9055	V4055; V4062; V9055
133569/U	Replacement Pre-ignition Interlock (Proof of Closure) Switch for V4055D, E; V4062D or V9055D	V4055; V4062; V9055
203422C/U	4-20 ma Adapter for V9055	V9055
7616BR/U	Crank Arm assembly with clip for Damper Arm of V4055, V4062 or V9055	V4055; V4062; V9055

V5055 Industrial Gas Valves

Safety shutoff valves used with V4055, V4062 and V9055 fluid power actuators to control gas flow to commercial and industrial burners.

- Use with natural or LP gases.
- Mount directly in gas supply line.
- Include 1/4 in. NPT upstream and downstream taps and plug.
- 4 in. models have only flanged connections.
- V5055 normally closed valves are rated for final shutoff service safety shutoff.

- V5055A, C, D, E Valves are for On-Off service.
- V5055B Valve has a characterized guide and in combination with the V4055, V4062, and V9055 Fluid Power Actuators, provides slow-opening, hi-lo-off, and modulating functions respectively.
- V5055C, E, F Valves have a double seal and are used with V4055D, E Actuators to provide proof-of-closure switch and valve seal over-travel interlock.
- V5055D, E, F Valves are for high pressure applications.

Operating Temperature Range: -40°F to +150°F; When used with V9055 – -40°F to +125°F (-40°C to +66°C; When used with V9055 – -40°C to +52°C)
Approvals, Underwriters Laboratories Inc.: When used with V4055A, B, D, E, V4062, V9055: Listed, File No. MH1639 Guide No. YIOZ
Approvals, CSA: When used with V4055, V4062, and V5097: Certified General listed File No. 158158, Class 3371 for USA and Canada
Approvals, Swiss RE: When used with the V4055A, G and V9055A: Approved, Report Nos. 20698, 20835, 21172, and 24061
Used With: V9055; V4055; V4062

Material Number	Pipe Size (inch)	Pipe Size (DN)	Capacity (cfh)	Capacity (m^3/hr)	Connection Type	Maximum Operating Differential Pressure	Approvals, Factory Mutual	Comments	Includes
V5055A1004/U	1 in.	DN25	960 cfh	27.2 m^3/hr	NPT	With V4055A, D or V4062 – 5 psi (340 mbar); With V4055B or E – 15 psi (1 bar)	When used with the V4055A, G and V9055A: Approved, Report Nos. 20698, 20835, 21172, and 24061		1/4 in. -18 NPT upstream tap and plug, 1/4 in. -18 NPT downstream tap and plug
V5055A1012/U	1 1/4 in.	DN32	1406 cfh	39.8 m^3/hr	NPT	With V4055A, D or V4062 – 5 psi (340 mbar); With V4055B or E – 15 psi (1 bar)	When used with the V4055A, G and V9055A: Approved, Report Nos. 20698, 20835, 21172, and 24061		1/4 in. -18 NPT downstream tap and plug, 1/4 in. -18 NPT upstream tap and plug
V5055A1020/U	1 1/2 in.	DN40	1717 cfh	48.6 m^3/hr	NPT	With V4055A, D or V4062 – 5 psi (340 mbar); With V4055B or E – 15 psi (1 bar)	When used with the V4055A, G and V9055A: Approved, Report Nos. 20698, 20835, 21172, and 24061		1/4 in. -18 NPT downstream tap and plug, 1/4 in. -18 NPT upstream tap and plug
V5055A1038/U	2 in.	DN50	3620 cfh	102.5 m^3/hr	NPT	With V4055A, D or V4062 – 5 psi (340 mbar); With V4055B or E – 15 psi (1 bar)	When used with the V4055A, G and V9055A: Approved, Report Nos. 20698, 20835, 21172, and 24061		1/4 in. -18 NPT upstream tap and plug, 1/4 in. -18 NPT downstream tap and plug
V5055A1046/U	2 1/2 in.	DN65	4250 cfh	120 m^3/hr	NPT	With V4055A, D or V4062 – 5 psi (340 mbar); With V4055B or E – 15 psi (1 bar)	When used with the V4055A, G and V9055A: Approved, Report Nos. 20698, 20835, 21172, and 24061		1/4 in. -18 NPT upstream tap and plug, 1/4 in. -18 NPT downstream tap and plug
V5055A1053/U	3 in.	DN80	5230 cfh	148 m^3/hr	NPT	With V4055A, D or V4062 – 5 psi (340 mbar); With V4055B or E – 15 psi (1 bar)	When used with the V4055A, G and V9055A: Approved, Report Nos. 20698, 20835, 21172, and 24061		1/4 in. -18 NPT upstream tap and plug, 1/4 in. -18 NPT downstream tap and plug
V5055A1228/U	4 in.	DN100	10200 cfh	288.8 m^3/hr	Flanged	With V4055A, D or V4062 – 3 psi (20.7 kPa); With V4055B or E – 5 psi (340 mbar)	When used with the V4055A, G and V9055A: Approved, Report Nos. 20698, 20835, 21172, and 24061		1/4 in. -18 NPT upstream tap and plug, 1/4 in. -18 NPT downstream tap and plug
V5055A1343/U	3/4 in.	DN20	665 cfh		NPT	With V4055A, D or V4062 – 5 psi (340 mbar); With V4055B or E – 15 psi (1 bar)	When used with the V4055A, G and V9055A: Approved, Report Nos. 20698, 20835, 21172, and 24061		1/4 in. -18 NPT upstream tap and plug, 1/4 in. -18 NPT downstream tap and plug

Material Number	Pipe Size (inch)	Pipe Size (DN)	Capacity (cfh)	Capacity (m^3/hr)	Connection Type	Maximum Operating Differential Pressure	Approvals, Factory Mutual	Comments	Includes
V5055B1002/U	1 in.	DN25	960 cfh	27.2 m^3/hr	NPT	With V4055A, D or V4062 – 5 psi (340 mbar); With V4055B or E – 15 psi (1 bar)	When used with the V4055A, G and V9055A: Approved, Report Nos. 20698, 20835, 21172, and 24061		1/4 in. -18 NPT upstream tap and plug, 1/4 in. -18 NPT downstream tap and plug
V5055B1010/U	1 1/4 in.	DN32	1406 cfh	39.8 m^3/hr	NPT	With V4055A, D or V4062 – 5 psi (340 mbar); With V4055B or E – 15 psi (1 bar)	When used with the V4055A, G and V9055A: Approved, Report Nos. 20698, 20835, 21172, and 24061		1/4 in. -18 NPT downstream tap and plug, 1/4 in. -18 NPT upstream tap and plug
V5055B1028/U	1 1/2 in.	DN40	1717 cfh	48.6 m^3/hr	NPT	With V4055A, D or V4062 – 5 psi (340 mbar); With V4055B or E – 15 psi (1 bar)	When used with the V4055A, G and V9055A: Approved, Report Nos. 20698, 20835, 21172, and 24061		1/4 in. -18 NPT downstream tap and plug, 1/4 in. -18 NPT upstream tap and plug
V5055B1069/U	2 in.	DN50	3620 cfh	102.5 m^3/hr	NPT	With V4055A, D or V4062 – 5 psi (340 mbar); With V4055B or E – 15 psi (1 bar)	When used with the V4055A, G and V9055A: Approved, Report Nos. 20698, 20835, 21172, and 24061		1/4 in. -18 NPT upstream tap and plug, 1/4 in. -18 NPT downstream tap and plug
V5055B1077/U	2 1/2 in.	DN65	4250 cfh	120 m^3/hr	NPT	With V4055A, D or V4062 – 5 psi (340 mbar); With V4055B or E – 15 psi (1 bar)	When used with the V4055A, G and V9055A: Approved, Report Nos. 20698, 20835, 21172, and 24061		1/4 in. -18 NPT upstream tap and plug, 1/4 in. -18 NPT downstream tap and plug
V5055B1085/U	3 in.	DN80	5230 cfh	148 m^3/hr	NPT	With V4055A, D or V4062 – 5 psi (340 mbar); With V4055B or E – 15 psi (1 bar)	When used with the V4055A, G and V9055A: Approved, Report Nos. 20698, 20835, 21172, and 24061		1/4 in. -18 NPT upstream tap and plug, 1/4 in. -18 NPT downstream tap and plug
V5055B1150/U	4 in.	DN100	9180 cfh	259.9 m^3/hr	Flanged	With V4055A, D or V4062 – 3 psi (20.7 kPa); With V4055B or E – 5 psi (340 mbar)	When used with the V4055A, G and V9055A: Approved, Report Nos. 20698, 20835, 21172, and 24061		1/4 in. -18 NPT upstream tap and plug, 1/4 in. -18 NPT downstream tap and plug
V5055C1000/U	2 in.	DN50	3620 cfh	102.5 m^3/hr	NPT	With V4055A, D or V4062 – 5 psi (340 mbar); With V4055B or E – 15 psi (1 bar)	When used with the V4055D, F and V9055A: Approved, Report Nos. 20698, 20835, 21172, and 24061		1/4 in. -18 NPT upstream tap and plug, 1/4 in. -18 NPT downstream tap and plug
V5055C1018/U	2 1/2 in.	DN65	4250 cfh	120 m^3/hr	NPT	With V4055A, D or V4062 – 5 psi (340 mbar); With V4055B or E – 15 psi (1 bar)	When used with the V4055D, F and V9055A: Approved, Report Nos. 20698, 20835, 21172, and 24061		1/4 in. -18 NPT upstream tap and plug, 1/4 in. -18 NPT downstream tap and plug
V5055C1026/U	3 in.	DN80	5230 cfh	148 m^3/hr	NPT	With V4055A, D or V4062 – 5 psi (340 mbar); With V4055B or E – 15 psi (1 bar)	When used with the V4055D, F and V9055A: Approved, Report Nos. 20698, 20835, 21172, and 24061		1/4 in. -18 NPT downstream tap and plug, 1/4 in. -18 NPT upstream tap and plug
V5055C1034/U	1 in.	DN25	960 cfh	27.2 m^3/hr	NPT	With V4055A, D or V4062 – 5 psi (340 mbar); With V4055B or E – 15 psi (1 bar)	When used with the V4055D, F and V9055A: Approved, Report Nos. 20698, 20835, 21172, and 24061		1/4 in. -18 NPT upstream tap and plug, 1/4 in. -18 NPT downstream tap and plug
V5055C1042/U	1 1/4 in.	DN32	1406 cfh	39.8 m^3/hr	NPT	With V4055A, D or V4062 – 5 psi (340 mbar); With V4055B or E – 15 psi (1 bar)	When used with the V4055D, F and V9055A: Approved, Report Nos. 20698, 20835, 21172, and 24061		1/4 in. -18 NPT downstream tap and plug, 1/4 in. -18 NPT upstream tap and plug

Material Number	Pipe Size (inch)	Pipe Size (DN)	Capacity (cfh)	Capacity (m^3/hr)	Connection Type	Maximum Operating Differential Pressure	Approvals, Factory Mutual	Comments	Includes
V5055C1059/U	1 1/2 in.	DN40	1717 cfh	48.6 m^3/hr	NPT	With V4055A, D or V4062 – 5 psi (340 mbar); With V4055B or E – 15 psi (1 bar)	When used with the V4055D, F and V9055A: Approved, Report Nos. 20698, 20835, 21172, and 24061		1/4 in. -18 NPT upstream tap and plug, 1/4 in. -18 NPT downstream tap and plug
V5055C1109/U	4 in.	DN100	9180 cfh	259.9 m^3/hr	Flanged	With V4055A, D or V4062 – 3 psi (20.7 kPa); With V4055B or E – 5 psi (340 mbar)	When used with the V4055D, F and V9055A: Approved, Report Nos. 20698, 20835, 21172, and 24061		1/4 in. -18 NPT upstream tap and plug, 1/4 in. -18 NPT downstream tap and plug
V5055C1182/U	3/4 in.	DN20	665 cfh		NPT	With V4055A, D or V4062 – 5 psi (340 mbar); With V4055B or E – 15 psi (1 bar)	When used with the V4055D, F and V9055A: Approved, Report Nos. 20698, 20835, 21172, and 24061		1/4 in. -18 NPT downstream tap and plug, 1/4 in. -18 NPT upstream tap and plug
V5055D1008/U	1 in.	DN25	960 cfh	27.2 m^3/hr	NPT	With V4055A, D or V4062 – 5 psi (340 mbar); With V4055B or E – 25 psi (1.6 bar)	When used with the V4055B: Approved, Report Nos. 20698, 20835, 21172, and 24068		1/4 in. -18 NPT upstream tap and plug, 1/4 in. -18 NPT downstream tap and plug
V5055D1016/U	1 1/4 in.	DN32	1406 cfh	39.8 m^3/hr	NPT	With V4055A, D or V4062 – 5 psi (340 mbar); With V4055B or E – 25 psi (1.6 bar)	When used with the V4055B: Approved, Report Nos. 20698, 20835, 21172, and 24068		1/4 in. -18 NPT upstream tap and plug, 1/4 in. -18 NPT downstream tap and plug
V5055D1024/U	1 1/2 in.	DN40	1717 cfh	48.6 m^3/hr	NPT	With V4055A, D or V4062 – 5 psi (340 mbar); With V4055B or E – 25 psi (1.6 bar)	When used with the V4055B: Approved, Report Nos. 20698, 20835, 21172, and 24068		1/4 in. -18 NPT upstream tap and plug, 1/4 in. -18 NPT downstream tap and plug
V5055D1032/U	2 in.	DN50	3620 cfh	102.5 m^3/hr	NPT	With V4055A, D or V4062 – 5 psi (340 mbar); With V4055B or E – 15 psi (1 bar)	When used with the V4055B: Approved, Report Nos. 20698, 20835, 21172, and 24068		1/4 in. -18 NPT upstream tap and plug, 1/4 in. -18 NPT downstream tap and plug
V5055D1040/U	2 1/2 in.	DN65	4250 cfh	120 m^3/hr	NPT	With V4055A, D or V4062 – 5 psi (340 mbar); With V4055B or E – 15 psi (1 bar)	When used with the V4055B: Approved, Report Nos. 20698, 20835, 21172, and 24068		1/4 in. -18 NPT upstream tap and plug, 1/4 in. -18 NPT downstream tap and plug
V5055D1057/U	3 in.	DN80	5230 cfh		NPT	With V4055A, D or V4062 – 5 psi (340 mbar); With V4055B or E – 15 psi (1 bar)	When used with the V4055B: Approved, Report Nos. 20698, 20835, 21172, and 24068		1/4 in. -18 NPT upstream tap and plug, 1/4 in. -18 NPT downstream tap and plug
V5055D1065/U	3/4 in.	DN20	665 cfh		NPT	With V4055A, D or V4062 – 5 psi (340 mbar); With V4055B or E – 25 psi (1.6 bar)	When used with the V4055B: Approved, Report Nos. 20698, 20835, 21172, and 24068		1/4 in. -18 NPT upstream tap and plug, 1/4 in. -18 NPT downstream tap and plug
V5055E1005/U	2 in.	DN50	3620 cfh	102.5 m^3/hr	NPT	With V4055A, D or V4062 – 5 psi (340 mbar); With V4055B or E – 15 psi (1 bar)	When used with the V4055E: Approved, Report Nos. 20698, 20835, 21172, and 24068		1/4 in. -18 NPT upstream tap and plug, 1/4 in. -18 NPT downstream tap and plug
V5055E1013/U	2 1/2 in.	DN65	4250 cfh	120 m^3/hr	NPT	With V4055A, D or V4062 – 5 psi (340 mbar); With V4055B or E – 15 psi (1 bar)	When used with the V4055E: Approved, Report Nos. 20698, 20835, 21172, and 24068		1/4 in. -18 NPT downstream tap and plug, 1/4 in. -18 NPT upstream tap and plug
V5055E1021/U	3 in.	DN80	5230 cfh	148 m^3/hr	NPT	With V4055A, D or V4062 – 5 psi (340 mbar); With V4055B or E – 15 psi (1 bar)	When used with the V4055E: Approved, Report Nos. 20698, 20835, 21172, and 24068		1/4 in. -18 NPT downstream tap and plug, 1/4 in. -18 NPT upstream tap and plug
V5055E1039/U	1 in.	DN25	960 cfh	27.2 m^3/hr	NPT	With V4055A, D or V4062 – 5 psi (340 mbar); With V4055B or E – 25 psi (1.6 bar)	When used with the V4055E: Approved, Report Nos. 20698, 20835, 21172, and 24068		1/4 in. -18 NPT upstream tap and plug, 1/4 in. -18 NPT downstream tap and plug

Industrial Gas Valves

Material Number	Pipe Size (inch)	Pipe Size (DN)	Capacity (cfh)	Capacity (m^3/hr)	Connection Type	Maximum Operating Differential Pressure	Approvals, Factory Mutual	Comments	Includes
V5055E1047/U	1 1/4 in.	DN32	1406 cfh	39.8 m^3/hr	NPT	With V4055A, D or V4062 – 5 psi (340 mbar); With V4055B or E – 25 psi (1.6 bar)	When used with the V4055E: Approved, Report Nos. 20698, 20835, 21172, and 24068		1/4 in. -18 NPT downstream tap and plug, 1/4 in. -18 NPT upstream tap and plug
V5055E1054/U	1 1/2 in.	DN40	1717 cfh	48.6 m^3/hr	NPT	With V4055A, D or V4062 – 5 psi (340 mbar); With V4055B or E – 25 psi (1.6 bar)	When used with the V4055E: Approved, Report Nos. 20698, 20835, 21172, and 24068		1/4 in. -18 NPT upstream tap and plug, 1/4 in. -18 NPT downstream tap and plug
V5055E1062/U	3/4 in.	DN20	665 cfh		NPT	With V4055A, D or V4062 – 5 psi (340 mbar); With V4055B or E – 25 psi (1.6 bar)	When used with the V4055E: Approved, Report Nos. 20698, 20835, 21172, and 24068		1/4 in. -18 NPT upstream tap and plug, 1/4 in. -18 NPT downstream tap and plug
V5055F1003/U	1 in.	DN25	960 cfh	27.2 m^3/hr	NPT	With V4055A, D or V4062 – 5 psi (340 mbar); With V4055B or E – 25 psi (1.6 bar)		Meets Intent of DIN Seat Leakage Requirements	1/4 in. -18 NPT downstream tap and plug, 1/4 in. -18 NPT upstream tap and plug
V5055F1011/U	1 1/2 in.	DN40	1717 cfh	48.6 m^3/hr	NPT	With V4055A, D or V4062 – 5 psi (340 mbar); With V4055B or E – 25 psi (1.6 bar)		Meets Intent of DIN Seat Leakage Requirements	1/4 in. -18 NPT downstream tap and plug, 1/4 in. -18 NPT upstream tap and plug
V5055F1037/U	1 1/4 in.	DN32	1406 cfh	39.8 m^3/hr	NPT	With V4055A, D or V4062 – 5 psi (340 mbar); With V4055B or E – 25 psi (1.6 bar)		Meets Intent of DIN Seat Leakage Requirements	1/4 in. -18 NPT downstream tap and plug, 1/4 in. -18 NPT upstream tap and plug

Dimensions in inches (millimeters)

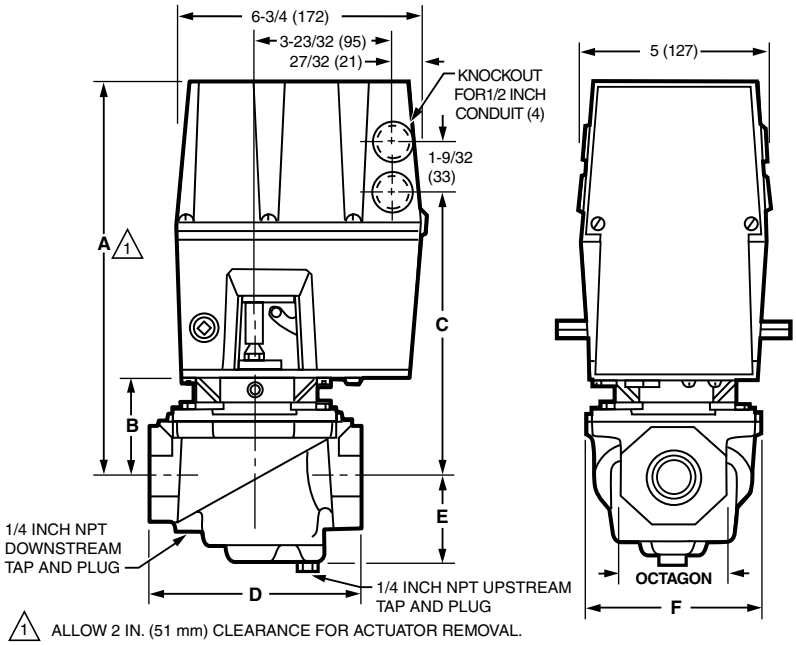

1 ALLOW 2 IN. (51 mm) CLEARANCE FOR ACTUATOR REMOVAL.

VALVE SIZE INCH	DIM A		DIM B		DIM C		DIM D		DIM E		DIM F		OCTAGON	
	IN.	MM	IN.	MM	IN.	MM	IN.	MM	IN.	MM	IN.	MM	IN.	MM
3/4	11-1/8	283	2-3/4	70	8-3/16	208	5-3/4	146	2-1/4	57	4-7/8	124	2-13/16	71
1	11-1/8	283	2-3/4	70	8-3/16	208	5-3/4	146	2-1/4	57	4-7/8	124	2-13/16	71
1-1/4	11-1/8	283	2-3/4	70	8-3/16	208	5-3/4	146	2-1/4	57	4-7/8	124	2-13/16	71
1-1/2	11-1/8	283	2-3/4	70	8-3/16	208	5-3/4	146	2-1/4	57	4-7/8	124	2-13/16	71
2	11-1/4	286	2-7/8	73	8-5/16	211	8-3/8	213	2-3/4	70	7-19/32	193	3-1/2	89
2-1/2	11-3/4	299	3-3/8	86	8-13/16	224	9-1/4	235	2-3/4	70	7-19/32	193	4-1/2	114
3	11-3/4	299	3-3/8	86	8-13/16	224	9-1/4	235	2-3/4	70	7-19/32	193	4-1/2	114

M27268A

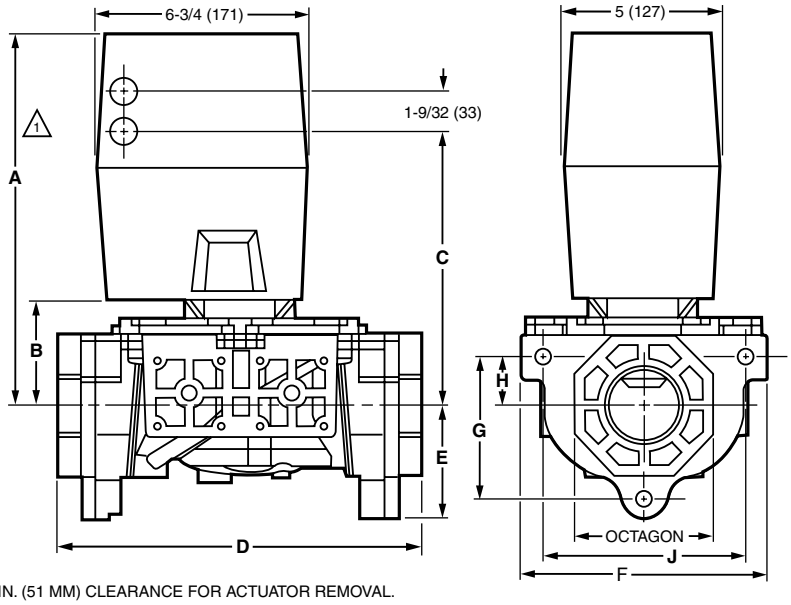

1 ALLOW 2 IN. (51 MM) CLEARANCE FOR ACTUATOR REMOVAL.

VALVE SIZE (IN.)	DIM. A		DIM. B		DIM. C		DIM. D		DIM. E		DIM. F		DIM. G		DIM. H		DIM. J		OCTAGON	
	IN.	MM	IN.	MM	IN.	MM	IN.	MM	IN.	MM	IN.	MM	IN.	MM	IN.	MM	IN.	MM	IN.	MM
3/4	11-1/8	283	2-3/4	70	8-3/16	208	8-1/4	210	2-7/16	62	5	127	2-5/16	58	7/8	23	3-15/16	100	2-13/16	71
1	11-1/8	283	2-3/4	70	8-3/16	208	8-1/4	210	2-7/16	62	5	127	2-5/16	58	7/8	23	3-15/16	100	2-13/16	71
1-1/4	11-1/8	283	2-3/4	70	8-3/16	208	8-1/4	210	2-7/16	62	5	127	2-5/16	58	7/8	23	3-15/16	100	2-13/16	71
1-1/2	11-1/8	283	2-3/4	70	8-3/16	208	8-1/4	210	2-7/16	62	5	127	2-5/16	58	7/8	23	3-15/16	100	2-13/16	71
2	11-3/4	298	3-3/8	86	8-5/16	211	11-3/4	298	3-5/8	91	8	203	4-7/16	113	1-1/2	38	6-1/2	165	4-1/2	114
2-1/2	11-3/4	298	3-3/8	86	8-5/16	211	11-3/4	298	3-5/8	91	8	203	4-7/16	113	1-1/2	38	6-1/2	165	4-1/2	114
3	11-3/4	298	3-3/8	86	8-5/16	211	11-3/4	298	3-5/8	91	8	203	4-7/16	113	1-1/2	38	6-1/2	165	4-1/2	114

M27581

V5097 Integrated Valve Train

Safety shutoff valves used with V4055, V4062 and V9055 fluid power actuators to control gas flow to commercial and industrial burners.

- Use with natural or LP gases.
- Mount directly in gas supply line.
- Two Valve body types. Small body type for 3/4 in., 1 in., 1-1/4 in., 1-1/2 in., 2 in. pipes. Large body types for 2 in., 2-1/2 in. and 3 in. pipes.
- Seven pipe adapter sizes from 3/4 in. to 3 in. have NPT or BSP threaded connections.
- Provides three 1/4 in. upstream and two 1/4 in. downstream tap and plug.
- CE version provides an additional downstream tap and plug.
- Yellow SHUT indicator attached to the valve stem provides an indication of the valve closed position.
- V5097A, C, D, E Valves are for on-off service.
- V5097B Valve has a characterized guide and in combination with the V4055, V4062 and V9055 Fluid Power Actuators, provides slow-opening, HI-LO-OFF, and modulating functions, respectively.
- V5097C, E Valves have a double seal and are used with V4055D, E Actuators to provide proof-of-closure switch and valve seal over-travel interlock.
- Actuators to provide proof-of-closure switch and valve seal over-travel interlock.
- V5097D, E Valves are for high pressure applications.
- Two valve body types (small and large) applicable to server pipe size.

Operating Temperature Range: -40°F to +150°F; When used with V9055 – -40°F to +125°F (-40°C to +66°C; When used with V9055 – -40°C to +52°C)
Approvals, Underwriters Laboratories Inc.: When used with V4055A, B, D, E, V4062, V9055: Listed, File No. MH1639 Guide No. YIOZ
Approvals, CSA: When used with V4055, V4062, and V5097: Certified General listed File No. 158158, Class 3371 for USA and Canada
Approvals, Swiss RE: When used with the V4055A, G: Approved, Report Nos. 20698, 20835, 21172, and 24061
Approvals, CE: CE #E3070 (Gastec)
Comments: Select Proper Pipe Adapter
Includes: Three 1/4 in. -18 NPT upstream and two 1/4 in. -18 NPT downstream taps
Used With: V9055; V4055; V4062

Material Number	Pipe Size (inch)	Pipe Size (DN)	Capacity (cfh)	Capacity (m^3/hr)	Maximum Operating Differential Pressure	Integrated Valve Train Body Size	Approvals, Factory Mutual
V5097A1004/U	3/4 in. or 1 in. or 1 1/4 in. or 2 in.	DN20 or DN25 or DN32 or DN50	665 cfh to 3620 cfh	18.8 to 102.5 m^3/hr	With V4055A, D or V4062 – 5 psi (340 mbar); With V4055B or E – 15 psi (1 bar)	Small body	When used with the V4055A, G: Approved, Report Nos. 20698, 20835, 21172, and 24061
V5097A1012/U	2 in. or 2 1/2 in. or 3 in.	DN50 or DN65 or DN80	3620 cfh to 5230 cfh	102.5 to 148.0 m^3/hr	With V4055A, D or V4062 – 5 psi (340 mbar); With V4055B or E – 15 psi (1 bar)	Large body	When used with the V4055A, G: Approved, Report Nos. 20698, 20835, 21172, and 24061
V5097B1002/U	3/4 in. or 1 in. or 1 1/4 in. or 2 in.	DN20 or DN25 or DN32 or DN50	665 cfh to 3620 cfh		With V4055A, D or V4062 – 5 psi (340 mbar); With V4055B or E – 15 psi (1 bar)	Small body	When used with the V4055A, G and V9055A: Approved, Report Nos. 20698, 20835, 21172, and 24061
V5097B1010/U	2 in. or 2 1/2 in. or 3 in.	DN50 or DN65 or DN80	3620 cfh to 5230 cfh	102.5 to 148.0 m^3/hr	With V4055A, D or V4062 – 5 psi (340 mbar); With V4055B or E – 15 psi (1 bar)	Large body	When used with the V4055A, G and V9055A: Approved, Report Nos. 20698, 20835, 21172, and 24061
V5097C1000/U	3/4 in. or 1 in. or 1 1/4 in. or 2 in.	DN20 or DN25 or DN32 or DN50	665 cfh to 3620 cfh	18.8 to 102.5 m^3/hr	With V4055A, D or V4062 – 5 psi (340 mbar); With V4055B or E – 15 psi (1 bar)	Small body	When used with the V4055D, F and V9055A: Approved, Report Nos. 20698, 20835, 21172, and 24066
V5097C1018/U	2 in. or 2 1/2 in. or 3 in.	DN50 or DN65 or DN80	3620 cfh to 5230 cfh	102.5 to 148.0 m^3/hr	With V4055A, D or V4062 – 5 psi (340 mbar); With V4055B or E – 15 psi (1 bar)	Large body	When used with the V4055D, F and V9055A: Approved, Report Nos. 20698, 20835, 21172, and 24066
V5097D1008/U	3/4 in. or 1 in. or 1 1/4 in. or 2 in.	DN20 or DN25 or DN32 or DN50	665 cfh to 3620 cfh	18.8 to 102.5 m^3/hr	With V4055A, D or V4062 – 5 psi (340 mbar); With V4055B or E – 25 psi (1.6 bar)	Small body	When used with the V4055B: Approved, Report Nos. 20698, 20835, 21172, and 24068
V5097D1016/U	2 in. or 2 1/2 in. or 3 in.	DN50 or DN65 or DN80	3620 cfh to 5230 cfh	102.5 to 148.0 m^3/hr	With V4055A, D or V4062 – 5 psi (340 mbar); With V4055B or E – 15 psi (1 bar)	Large body	When used with the V4055B: Approved, Report Nos. 20698, 20835, 21172, and 24068
V5097E1005/U	3/4 in. or 1 in. or 1 1/4 in. or 2 in.	DN20 or DN25 or DN32 or DN50	665 cfh to 3620 cfh	18.8 to 102.5 m^3/hr	With V4055A, D or V4062 – 5 psi (340 mbar); With V4055B or E – 25 psi (1.6 bar)	Small body	When used with the V4055E: Approved, Report Nos. 20698, 20835, 21172, and 24068
V5097E1013/U	2 in. or 2 1/2 in. or 3 in.	DN50 or DN65 or DN80	3620 cfh to 5230 cfh	102.5 to 148.0 m^3/hr	With V4055A, D or V4062 – 5 psi (340 mbar); With V4055B or E – 15 psi (1 bar)	Large body	When used with the V4055E: Approved, Report Nos. 20698, 20835, 21172, and 24068

Dimensions in inches (millimeters)

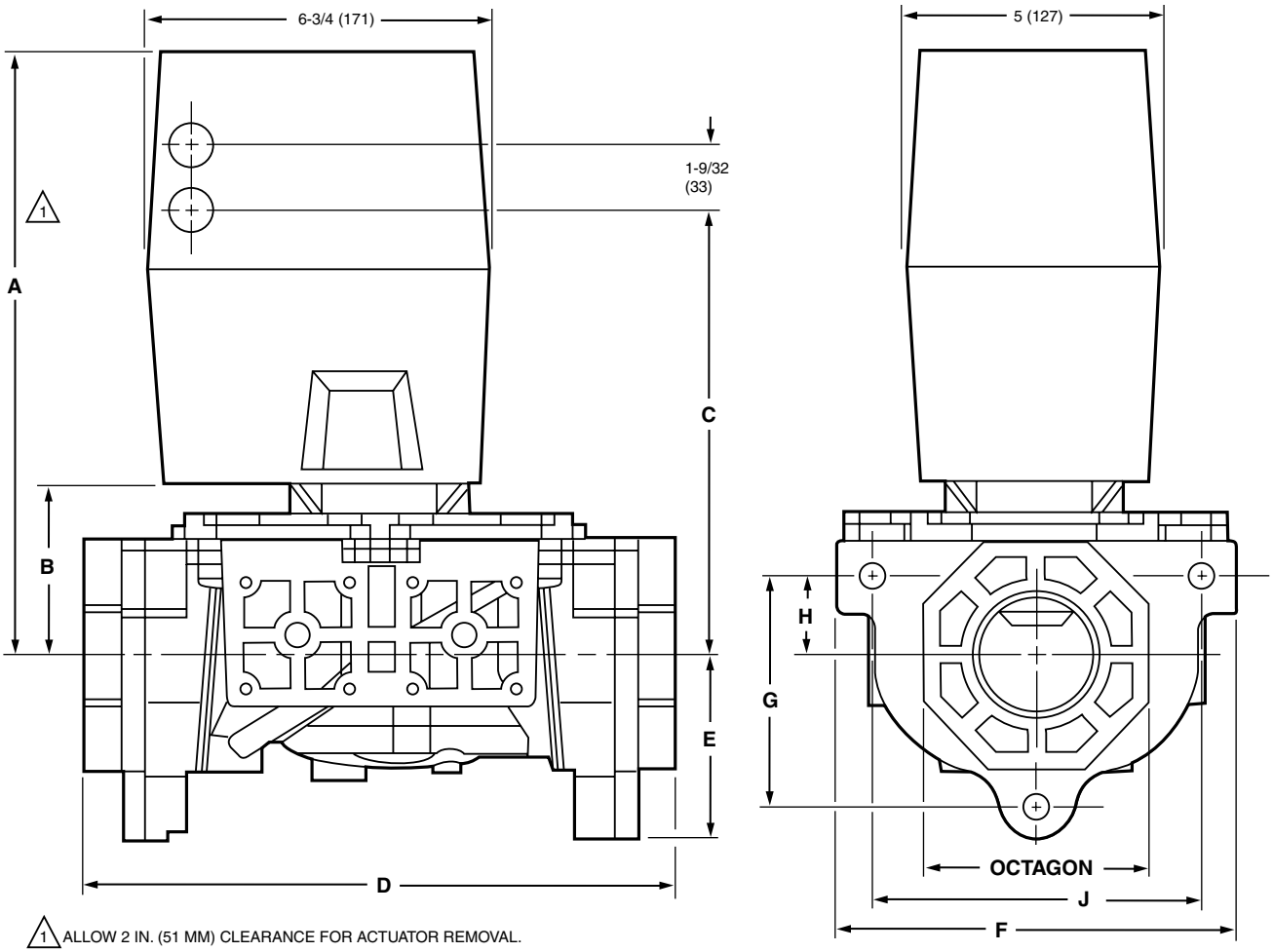

1 ALLOW 2 IN. (51 MM) CLEARANCE FOR ACTUATOR REMOVAL.

VALVE SIZE (IN.)	DIM. A		DIM. B		DIM. C		DIM. D		DIM. E		DIM. F		DIM. G		DIM. H		DIM. J		OCTAGON	
	IN.	MM	IN.	MM	IN.	MM	IN.	MM	IN.	MM	IN.	MM	IN.	MM	IN.	MM	IN.	MM	IN.	MM
3/4	11-1/8	283	2-3/4	70	8-3/16	208	8-1/4	210	2-7/16	62	5	127	2-5/16	58	7/8	23	3-15/16	100	2-13/16	71
1	11-1/8	283	2-3/4	70	8-3/16	208	8-1/4	210	2-7/16	62	5	127	2-5/16	58	7/8	23	3-15/16	100	2-13/16	71
1-1/4	11-1/8	283	2-3/4	70	8-3/16	208	8-1/4	210	2-7/16	62	5	127	2-5/16	58	7/8	23	3-15/16	100	2-13/16	71
1-1/2	11-1/8	283	2-3/4	70	8-3/16	208	8-1/4	210	2-7/16	62	5	127	2-5/16	58	7/8	23	3-15/16	100	2-13/16	71
2	11-3/4	298	3-3/8	86	8-5/16	211	11-3/4	298	3-5/8	91	8	203	4-7/16	113	1-1/2	38	6-1/2	165	4-1/2	114
2-1/2	11-3/4	298	3-3/8	86	8-5/16	211	11-3/4	298	3-5/8	91	8	203	4-7/16	113	1-1/2	38	6-1/2	165	4-1/2	114
3	11-3/4	298	3-3/8	86	8-5/16	211	11-3/4	298	3-5/8	91	8	203	4-7/16	113	1-1/2	38	6-1/2	165	4-1/2	114

M11682B

Integrated Valve Train Pipe Adapters

Material Number	Pipe Size (inch)	Pipe Size (DN)	Connection Type	Integrated Valve Train Body Size	Description	Used With
32000109-001/U	3/4 in.	DN20	NPT	Small body	3/4 in. NPT Pipe Adapter Small Body Integrated Valve Train. Required for Valve Train Assembly.	V5097; V4297; V5197
32000109-002/U	1 in.	DN25	NPT	Small body	1 in. NPT Pipe Adapter Small Body Integrated Valve Train. Required for Valve Train Assembly.	V5097; V4297; V5197
32000109-003/U	1 1/4 in.	DN32	NPT	Small body	1 1/4 in. NPT Pipe Adapter Small Body Integrated Valve Train. Required for Valve Train Assembly.	V5097; V4297; V5197
32000109-004/U	1 1/2 in.	DN40	NPT	Small body	1 1/2 in. NPT Pipe Adapter Small Body Integrated Valve Train. Required for Valve Train Assembly.	V5097; V4297; V5197
32000109-005/U	2 in.	DN50	NPT	Small body	2 in. NPT Pipe Adapter Small Body Integrated Valve Train. Required for Valve Train Assembly.	V5097; V4297; V5197
32000109-006/U	3/4 in.	DN20	BSP	Small body	3/4 in. BSP Pipe Adapter Small Body Integrated Valve Train. Required for Valve Train Assembly.	V5097; V4297; V5197
32000109-007/U	1 in.	DN25	BSP	Small body	1 in. BSP Pipe Adapter Small Body Integrated Valve Train. Required for Valve Train Assembly.	V5097; V4297; V5197
32001605-001/U	2 in.	DN50	NPT	Large body	2 in. NPT Pipe Adapter Large Body Integrated Valve Train. Required for Valve Train Assembly.	V5097; V4297; V5197
32001605-002/U	2 1/2 in.	DN65	NPT	Large body	2 1/2 in. NPT Pipe Adapter Large Body Integrated Valve Train. Required for Valve Train Assembly.	V5097; V4297; V5197
32001605-003/U	3 in.	DN80	NPT	Large body	3 in. NPT Pipe Adapter Large Body Integrated Valve Train. Required for Valve Train Assembly.	V5097; V4297; V5197
32001605-004/U	2 in.	DN50	BSP	Large body	2 in. BSP Pipe Adapter Large Body Integrated Valve Train. Required for Valve Train Assembly.	V5097; V4297; V5197
32001605-005/U	2 1/2 in.	DN65	BSP	Large body	2 1/2 in. BSP Pipe Adapter Large Body Integrated Valve Train. Required for Valve Train Assembly.	V5097; V4297; V5197
32001605-006/U	3 in.	DN80	BSP	Large body	3 in. BSP Pipe Adapter Large Body Integrated Valve Train. Required for Valve Train Assembly.	V5097; V4297; V5197

V5055/5097 Replacement Parts or Accessories

Material Number	Description	Used With
133392A/U	O-Ring Assembly for 2 in., 2 1/2 in., and 3 in. V5055 valves	V5055/V5097 valves
133393A/U	O-Ring Assembly for 1 in., 1 1/4 in., and 1 1/2 in. V5055 valves	V5055/V5097 valves
133398AA/U	Replacement Bonnet Assembly with 133393A Seal Assembly for 3/4, 1, 1-1/4, 1-1/2 in. V5055A valves	V5055/V5097 valves
133398BA/U	Replacement Bonnet Assembly with 133393A Seal Assembly for 3/4, 1, 1-1/4, 1-1/2 in. V5055B valves	V5055/V5097 valves
133398CA/U	Replacement Bonnet Assembly, with 137253A replacement Seal Assembly for small body (3/4, 1, 1 1/2 in.) V5055/V5097C.	V5055/V5097 valves
133417AA/U	Replacement Bonnet Assembly with 133392A Seal Assembly for 2, 2 1/2, and 3 in. V5055A valves	V5055/V5097 valves
133417BA/U	Replacement Bonnet Assembly with 133392A Seal Assembly for 2, 2 1/2, and 3 in. V5055B valves	V5055/V5097 valves
133417CA/U	Bonnet Assembly for 2, 2 1/2, or 3 in. V5055C or V5097C valves	V5055C/V5097C valves
137253A/U	Replacement seal assembly. For 4 inch V5055.	V5055
4074EYE/U	Bag assembly for V5097 (large body) includes 6 ea bolts, nuts and washers.	Large Body V5097
4074EYF/U	Bag assembly for V5097 (small body) includes 6 ea bolts, nuts and washers.	Small Body V5097
4074EYK/U	Bag assembly for V5097 (small body) includes (2) O-rings, (1) grease capsule.	Small Body V5097
4074EYL/U	Bag assembly for V5097 (large body) includes (2) O-rings, (1) grease capsule.	Large Body V5097

V4046C; V8046C Pilot Gas Valves

Provide on-off control of natural, LP and manufactured gases to pilot burners in industrial and commercial applications.

- Magnetically operated, normally closed.
- Provide instantaneous action when energized.
- On power failure, valve closes in one second maximum.
- Use in any position, directly in pipe line or on support bracket.
- Replace the solenoid coil without removing the valve body from the piping connections.
- Straight-through valve pattern.
- Available in line voltage or low voltage models.

Type of Fuel: Air; natural; manufactured; LP
Body Pattern: Straight-through
Valve Opening Time: 1 sec max
Valve Closing Time: 1 sec max
Mounting: Directly in pipe or on support bracket
Materials: Body – Aluminum
Power Consumption: 8 W
Operating Temperature Range: -40°F to +125°F (-40°C to +52°C)
Approvals, Underwriters Laboratories Inc.: Listed: File No. MH1639, V3, S3 - Guide No. YIOZ
Approvals, CSA: Certificate No. 158158-2500006058, Guide No. C3371-03, 83
Approvals, Factory Mutual: Approved: Report No. 17450
Pressure Ratings (psi): 10 psi
Pressure Ratings (kPa): 68.9 kPa

Dimensions in inches (millimeters)

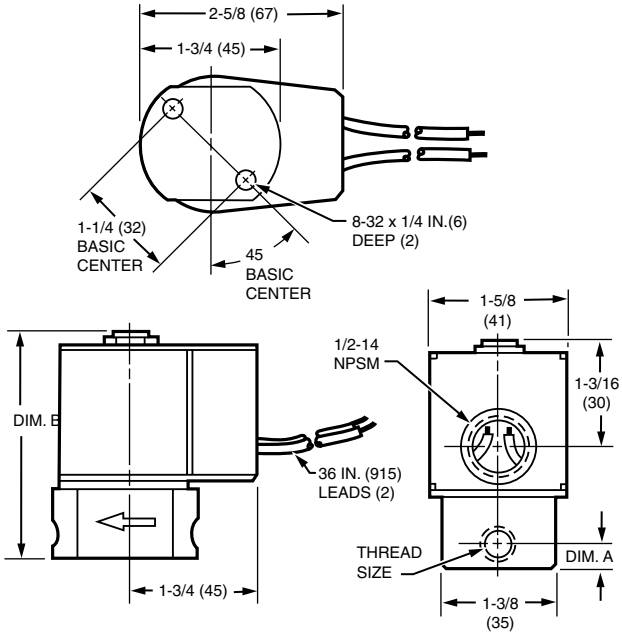

MODEL	BODY SIZE	THREAD SIZE	DIM. A		DIM. B	
			IN	MM	IN	MM
V4046C, V8046C	SMALL	1/8-27 NPT	5/16	8	2-3/4	70
	SMALL	1/4-18 NPT	3/8	10	3	76
	LARGE	1/4-18 NPT	1/2	13	3-1/4	83
	LARGE	3/8-18 NPT	1/2	13	3-1/4	83

M16595A

Material Number	Pipe Size (inch)	Capacity (cfh)	Capacity (m³/hr)	Voltage	Frequency	Electrical Connections	Approvals, Swiss RE
V4046C1005/U	1/8 in.	20 cfh	0.57 m³/hr	110 Vac; 120 Vac	50 Hz; 60 Hz	Two 36-in. leadwires and 1/2 in. conduit bushing	Acceptable
V4046C1021/U	1/4 in.	20 cfh	0.57 m³/hr	110 Vac; 120 Vac	50 Hz; 60 Hz	Two 36-in. leadwires and 1/2 in. conduit bushing	Acceptable
V4046C1047/U	1/4 in.	55 cfh	1.56 m³/hr	110 Vac; 120 Vac	50 Hz; 60 Hz	Two 36-in. leadwires and 1/2 in. conduit bushing	Acceptable
V4046C1054/U	3/8 in.	67 cfh	1.90 m³/hr	110 Vac; 120 Vac	50 Hz; 60 Hz	Two 36-in. leadwires and 1/2 in. conduit bushing	Acceptable
V4046C1120/U	3/8 in.	67 cfh	1.90 m³/hr	120 Vac	60 Hz	Two 10 ft. leadwires and 1/2 in. conduit bushing	Acceptable
V8046C1006/U	1/8 in.	20 cfh	0.57 m³/hr	24 Vac	60 Hz	Two 36-in. leadwires and 1/2 in. conduit bushing	
V8046C1014/U	1/4 in.	20 cfh	0.57 m³/hr	24 Vac	60 Hz	Two 36-in. leadwires and 1/2 in. conduit bushing	
V8046C1022/U	1/4 in.	55 cfh	1.56 m³/hr	24 Vac	60 Hz	Two 36-in. leadwires and 1/2 in. conduit bushing	
V8046C1030/U	3/8 in.	67 cfh	1.90 m³/hr	24 Vac	60 Hz	Two 36-in. leadwires and 1/2 in. conduit bushing	

V4295; V8295 Solenoid Gas Valves

V4295A/V8295A normally closed and V4295S/V8295S normally open (vent) solenoid gas valves, are suitable for furnaces, ovens, atmospheric burners, commercial water heaters, rooftop make-up air units, power burners, and commercial/industrial boilers.

- V8295A, S are used with 24 Vac controllers.
- V4295A, S are used with 120 Vac controllers.
- Positive close off of gas flow when de-energized.
- High valve spring force allows up to 0.7 psi back pressure at valve seat.
- No inlet pressure influence at valve seat.
- Inlet pressure changes do not affect ability to close valve.
- Low operating noise.
- Low rush-in current.
- Upstream and downstream taps allows tapping and testing pressure points.

Type of Fuel: Air; natural; manufactured; mixed; LP
Pressure Tapping: Inlet and outlet pressure taps – 1/4 in. NPT
Body Pattern: Straight-through, non-offset
Valve Opening Time:less than 1 sec
Valve Closing Time: less than 1 sec
Mounting: Vertical to 90 degrees from vertical

Materials: Body – Die-cast aluminum
Frequency: 50 Hz; 60 Hz
Electrical Connections: Screw terminals
Operating Temperature Range: -40°F to +140°F (-40°C to +60°C)
Approvals, Swiss RE: Acceptable
Approvals, Control Safety Devices: Acceptable

Material Number	Pipe Size (inch)	Pipe Size (DN)	Capacity (cfh)	Capacity (m³/hr)	Voltage	Approximate, Dimensions	Current Ratings	Pressure Ratings (psi)	Pressure Ratings (kPa)	Approvals, Underwriters Laboratories Inc.	Approvals, CSA	Approvals, Factory Mutual
V4295A1015	1/2 in.	DN15	250 cfh	7.1 m³/hr	120 Vac	4 7/16 in. high x 2 7/8 in. wide x 2 3/16 deep (113 mm high x 73 mm wide x 56 mm deep)	0.16 max amps at rated Vac/Hz	2 psi	13.8 kPa	Listed: File No. MH18476, V1, S1 - Guide No. YIOZ	Certificate No. 158158-1154280, Guide No. C3371-03, 04, 83	Approved: Report No. J.I.OD6A2. AF
V4295A1023	3/4 in.	DN20	645 cfh	18.3 m³/hr	120 Vac	5 1/4 in. high x 3 7/16 in. wide x 2 3/4 in. deep (133 mm high x 87 mm wide x 70 mm deep)	0.16 max amps at rated Vac/Hz	2 psi	13.8 kPa	Listed: File No. MH18476, V1, S1 - Guide No. YIOZ	Certificate No. 158158-1154280, Guide No. C3371-03, 04, 83	Approved: Report No. J.I.OD6A2. AF
V4295A1031	1 in.	DN25	790 cfh	22.4 m³/hr	120 Vac	5 1/4 in. high x 3 15/16 in. wide x 3 in. deep (133 mm high x 100 mm wide x 76 mm deep)	0.16 max amps at rated Vac/Hz	2 psi	13.8 kPa	Listed: File No. MH18476, V1, S1 - Guide No. YIOZ	Certificate No. 158158-1154280, Guide No. C3371-03, 04, 83	Approved: Report No. J.I.OD6A2. AF
V4295A1049	1 1/4 in.	DN32	1450 cfh	41.0 m³/hr	120 Vac	8 in. high x 5 15/16 in. wide x 4 3/8 in. deep (203 mm high x 151 mm wide x 111 mm deep)	0.34 max amps at rated Vac/Hz	2 psi	13.8 kPa	Listed: File No. MH18476, V1, S1 - Guide No. YIOZ	Certificate No. 158158-1154280, Guide No. C3371-03, 04, 83	Approved: Report No. J.I.OD6A2. AF
V4295A1056	1 1/2 in.	DN40	2190 cfh	62.0 m³/hr	120 Vac	8 3/8 in. high x 5 15/16 in. wide x 4 3/8 in. deep (213 mm high x 151 mm wide x 111 mm deep)	0.3 max amps at rated Vac/Hz	2 psi	13.8 kPa	Listed: File No. MH18476, V1, S1 - Guide No. YIOZ	Certificate No. 158158-1154280, Guide No. C3371-03, 04, 83	Approved: Report No. J.I.OD6A2. AF
V4295A1064	2 in.	DN50	3465 cfh	98.1 m³/hr	120 Vac	8 3/8 in. high x 6 11/16 in. wide x 5 3/8 in. deep (213 mm high x 170 mm wide x 137 mm deep)	0.525 max amps at rated Vac/Hz	2 psi	13.8 kPa	Listed: File No. MH18476, V1, S1 - Guide No. YIOZ	Certificate No. 158158-1154280, Guide No. C3371-03, 04, 83	Approved: Report No. J.I.OD6A2. AF
V4295A1072	2 1/2 in.	DN65	5070 cfh	143.5 m³/hr	120 Vac	12 3/4 in. high x 9 1/2 in wide x 7 7/8 in. deep (324 mm high x 241 mm wide x 200 mm deep)	0.575 max amps at rated Vac/Hz	2 psi	13.8 kPa	Listed: File No. MH18476, V1, S1 - Guide No. YIOZ	Certificate No. 158158-1154280, Guide No. C3371-03, 04, 83	Approved: Report No. J.I.OD6A2. AF
V4295A1080	3 in.	DN80	6100 cfh	172.7 m³/hr	120 Vac	12 3/4 in. high x 9 1/2 in wide x 7 7/8 in. deep (324 mm high x 241 mm wide x 200 mm deep)	0.675 max amps at rated Vac/Hz	2 psi	13.8 kPa	Listed: File No. MH18476, V1, S1 - Guide No. YIOZ	Certificate No. 158158-1154280, Guide No. C3371-03, 04, 83	Approved: Report No. J.I.OD6A2. AF

Material Number	Pipe Size (inch)	Pipe Size (DN)	Capacity (cfh)	Capacity (m^3/hr)	Voltage	Approximate, Dimensions	Current Ratings	Pressure Ratings (psi)	Pressure Ratings (kPa)	Approvals, Underwriters Laboratories Inc.	Approvals, CSA	Approvals, Factory Mutual
V4295A1098	3/8 in.		210 cfh	5.9 m^3/hr	120 Vac	4 7/16 in. high x 2 7/8 in. wide x 2 3/16 deep (113 mm high x 73 mm wide x 56 mm deep)	0.16 max amps at rated Vac/Hz	5 psi	34.5 kPa	Listed: File No. MH18476, V1, S1 - Guide No. YIOZ	Certificate No. 158158-1154280, Guide No. C3371-03, 04, 83	Approved: Report No. J.I.OD6A2. AF
V4295A1106	1/2 in.	DN15	290 cfh	8.2 m^3/hr	120 Vac	4 7/16 in. high x 2 7/8 in. wide x 2 3/16 deep (113 mm high x 73 mm wide x 56 mm deep)	0.16 max amps at rated Vac/Hz	5 psi	34.5 kPa	Listed: File No. MH18476, V1, S1 - Guide No. YIOZ	Certificate No. 158158-1154280, Guide No. C3371-03, 04, 83	Approved: Report No. J.I.OD6A2. AF
V4295A1114	3/4 in.	DN20	610 cfh	17.3 m^3/hr	120 Vac	3 3/16 in. high x 3 7/16 in. wide x 2 3/4 in. deep (81 mm high x 87 mm wide x 70 mm deep)	0.2 max amps at rated Vac/Hz	5 psi	34.5 kPa	Listed: File No. MH18476, V1, S1 - Guide No. YIOZ	Certificate No. 158158-1154280, Guide No. C3371-03, 04, 83	Approved: Report No. J.I.OD6A2. AF
V4295A1122	1 in.	DN25	825 cfh	23.4 m^3/hr	120 Vac	6 5/16 in. high x 3 15/16 in. wide x 3 in. deep (160 mm high x 100 mm wide x 76 mm deep)	0.2 max amps at rated Vac/Hz	5 psi	34.5 kPa	Listed: File No. MH18476, V1, S1 - Guide No. YIOZ	Certificate No. 158158-1154280, Guide No. C3371-03, 04, 83	Approved: Report No. J.I.OD6A2. AF
V4295A1130	1 1/4 in.	DN32	1950 cfh	55.2 m^3/hr	120 Vac	8 9/16 in. high x 5 15/16 in. wide x 4 3/8 in. deep (217 mm high x 151 mm wide x 111 mm deep)	0.55 max amps at rated Vac/Hz	5 psi	34.5 kPa	Listed: File No. MH18476, V1, S1 - Guide No. YIOZ	Certificate No. 158158-1154280, Guide No. C3371-03, 04, 83	Approved: Report No. J.I.OD6A2. AF
V4295A1148/U	1 1/2 in.	DN40	2270 cfh	64.3 m^3/hr	120 Vac	8 9/16 in. high x 5 15/16 in. wide x 4 3/8 in. deep (217 mm high x 151 mm wide x 111 mm deep)	0.55 max amps at rated Vac/Hz	5 psi	34.5 kPa	Listed: File No. MH18476, V1, S1 - Guide No. YIOZ	Certificate No. 158158-1154280, Guide No. C3371-03, 04, 83	Approved: Report No. J.I.OD6A2. AF
V4295A1155	2 in.	DN50	3740 cfh	105.9 m^3/hr	120 Vac	9 3/16 in. high x 6 11/16 in. wide x 5 3/8 in. deep (233 mm high x 170 mm wide x 137 mm deep)	0.54 max amps at rated Vac/Hz	5 psi	34.5 kPa	Listed: File No. MH18476, V1, S1 - Guide No. YIOZ	Certificate No. 158158-1154280, Guide No. C3371-03, 04, 83	Approved: Report No. J.I.OD6A2. AF
V4295S1005	3/4 in.	DN20	350 cfh	9.9 m^3/hr	120 Vac	5 1/2 in. high x 3 7/16 in. wide x 2 3/4 in. deep (140 mm high x 87 mm wide x 70 mm deep)	0.16 max amps at rated Vac/Hz	2 psi	13.8 kPa	Listed: File No. MH18476, V1, S1 - Guide No. YIOZ	Certificate No. 158158-1154280, Guide No. C3371-03, 83	Approved: Report No. J.I.OD6A2. AF
V4295S1013	1 in.	DN25	420 cfh	11.9 m^3/hr	120 Vac	5 1/2 in. high x 3 15/16 in. wide x 3 in. deep (140 mm high x 100 mm wide x 76 mm deep)	0.16 max amps at rated Vac/Hz	2 psi	13.8 kPa	Listed: File No. MH18476, V1, S1 - Guide No. YIOZ	Certificate No. 158158-1154280, Guide No. C3371-03, 83	Approved: Report No. J.I.OD6A2. AF
V4295S1021	1 1/4 in.	DN32	1100 cfh	31.1 m^3/hr	120 Vac	8 3/4 in. high x 5 15/16 in. wide x 4 3/8 in. deep (222 mm high x 151 mm wide x 111 mm deep)	0.34 max amps at rated Vac/Hz	2 psi	13.8 kPa	Listed: File No. MH18476, V1, S1 - Guide No. YIOZ	Certificate No. 158158-1154280, Guide No. C3371-03, 83	Approved: Report No. J.I.OD6A2. AF
V8295A1016	1/2 in.	DN15	250 cfh	7.1 m^3/hr	24 Vac	4 7/16 in. high x 2 7/8 in. wide x 2 3/16 deep (113 mm high x 73 mm wide x 56 mm deep)	0.8 max amps at rated Vac/Hz	2 psi	13.8 kPa	Component Recognized; File No. YLOZ	Certificate No. 158158-1154280, Guide No. C3371-03, 85	Approved: 3/8 in., 1/2 in., 3/4 in. only
V8295A1024	3/4 in.	DN20	645 cfh	18.3 m^3/hr	24 Vac	5 1/4 in. high x 3 7/16 in. wide x 2 3/4 in. deep (133 mm high x 87 mm wide x 70 mm deep)	0.8 max amps at rated Vac/Hz	2 psi	13.8 kPa	Component Recognized; File No. YLOZ	Certificate No. 158158-1154280, Guide No. C3371-03, 85	Approved: 3/8 in., 1/2 in., 3/4 in. only
V8295A1032	1 in.	DN25	790 cfh	22.4 m^3/hr	24 Vac	5 1/4 in. high x 3 15/16 in. wide x 3 in. deep (133 mm high x 100 mm wide x 76 mm deep)	0.8 max amps at rated Vac/Hz	2 psi	13.8 kPa	Component Recognized; File No. YLOZ	Certificate No. 158158-1154280, Guide No. C3371-03, 85	Approved: 3/8 in., 1/2 in., 3/4 in. only

Solenoid Gas Valves

Material Number	Pipe Size (inch)	Pipe Size (DN)	Capacity (cfh)	Capacity (m^3/hr)	Voltage	Approximate, Dimensions	Current Ratings	Pressure Ratings (psi)	Pressure Ratings (kPa)	Approvals, Underwriters Laboratories Inc.	Approvals, CSA	Approvals, Factory Mutual
V8295A1040	1 1/4 in.	DN32	1450 cfh	41.0 m^3/hr	24 Vac	8 in. high x 5 15/16 in. wide x 4 3/8 in. deep (203 mm high x 151 mm wide x 111 mm deep)	1.6 max amps at rated Vac/Hz	2 psi	13.8 kPa	Component Recognized; File No. YLOZ	Certificate No. 158158-1154280, Guide No. C3371-03, 85	Approved: 3/8 in., 1/2 in., 3/4 in. only
V8295A1057	1 1/2 in.	DN40	2190 cfh	62.0 m^3/hr	24 Vac	8 3/8 in. high x 5 15/16 in. wide x 4 3/8 in. deep (213 mm high x 151 mm wide x 111 mm deep)	1.7 max amps at rated Vac/Hz	2 psi	13.8 kPa	Component Recognized; File No. YLOZ	Certificate No. 158158-1154280, Guide No. C3371-03, 85	Approved: 3/8 in., 1/2 in., 3/4 in. only
V8295A1065	2 in.	DN50	3465 cfh	98.1 m^3/hr	24 Vac	8 3/8 in. high x 6 11/16 in. wide x 5 3/8 in. deep (213 mm high x 170 mm wide x 137 mm deep)	2.8 max amps at rated Vac/Hz	2 psi	13.8 kPa	Component Recognized; File No. YLOZ	Certificate No. 158158-1154280, Guide No. C3371-03, 85	Approved: 3/8 in., 1/2 in., 3/4 in. only
V8295S1006	3/4 in.	DN20	350 cfh	9.9 m^3/hr	24 Vac	5 1/2 in. high x 3 7/16 in. wide x 2 3/4 in. deep (140 mm high x 87 mm wide x 70 mm deep)	0.8 max amps at rated Vac/Hz	2 psi	13.8 kPa	Component Recognized; File No. YLOZ	Certificate No. 158158-1154280, Guide No. C3371-03, 85	Approved: 3/8 in., 1/2 in., 3/4 in. only

V4297A Solenoid Safety Shut-off Valve for IVT

V4297A are normally closed solenoid gas valve. Suitable for use on furnaces, ovens, atmospheric burners, commercial water heaters, rooftop make-up air units, power burners, and commercial/industrial boilers.

- V4297A are used with 120 Vac controllers.
- Positive close off of gas flow when de-energized.
- High valve spring force allows up to 0.7 psi back pressure at valve seat.
- No inlet pressure influence at valve seat.
- Inlet pressure changes do not affect ability to close valve.
- Low operating noise.
- Low rush-in current.
- Upstream and downstream taps allows tapping and testing pressure points.
- For use with the Integrated Valve Train.
- Accepts C6097 Pressure Switch mounted directly to flange (upstream pressure tap only).

Type of Fuel: Air; natural; manufactured; mixed; LP
Pressure Tapping: Inlet and outlet pressure taps – 1/4 in. NPT
Body Pattern: Straight-through, non-offset
Valve Opening Time: less than 1 sec
Valve Closing Time: less than 1 sec
Flanges: Required, Order Separately
Mounting: Directly bolted to Integrated Valve Train Components
Materials: Body – Die-cast aluminum
Voltage: 110 Vac; 120 Vac
Frequency: 50 Hz; 60 Hz
Electrical Connections: Screw terminals
Operating Temperature Range: -40°F to +130°F (-40°C to +54°C)
Approvals, Underwriters Laboratories Inc.: Listed: File No. MH18476, V1, S1 - Guide No. YIOZ

Approvals, CSA: Certificate No. 158158-1154280, Guide No. C3371-03, 04, 83
Approvals, Swiss RE: Acceptable
Pressure Ratings (psi): 5 psi
Pressure Ratings (kPa): 34.5 kPa

Replacement Parts:
4074EYF/U – Bag assembly for V5097 (small body) includes 6 ea bolts, nuts and washers.
4074EYK/U – Bag assembly for V5097 (small body) includes (2) O-rings, (1) grease capsule.

Dimensions in inches (millimeters)

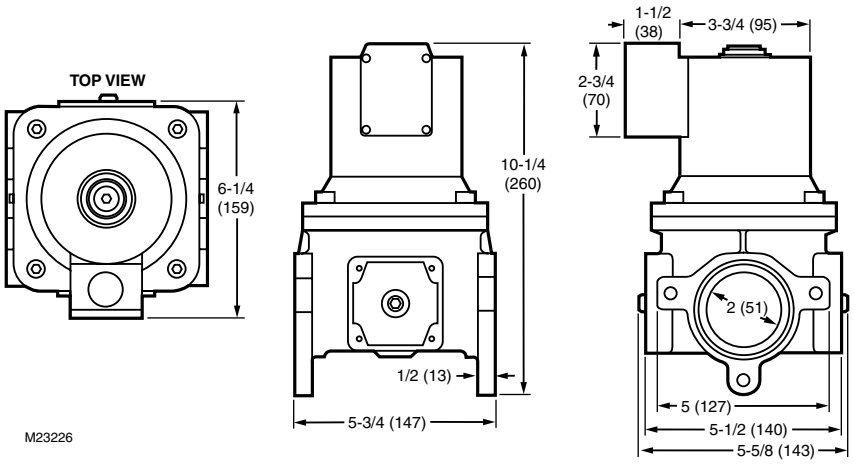

Material Number	Pipe Size (inch)	Pipe Size (DN)	Capacity (cfh)	Capacity (m^3/hr)	Approximate, Dimensions	Integrated Valve Train Body Size	Current Ratings
V4297A1005	3/4 in. to 1 1/4 in.	DN20 or DN25 or DN32	650 cfh; 700 cfh; 780 cfh	19.8 m^3/hr	9 in. high x 5 3/4 in. wide x 5 5/8 in. deep (229 mm high x 147 mm wide x 143 mm deep)	Small body, small flow	0.2 max amps at rated Vac/Hz
V4297A1013	3/4 in. to 2 in.	DN20 or DN25 or DN32 or DN40 or DN50	1190 cfh; 1460 cfh; 2260 cfh; 2735 cfh; 3060 cfh		10 1/4 in. high x 5 3/4 in. wide x 5 5/8 in. deep (260 mm high x 147 mm wide x 143 mm deep)	Small body, large flow	0.5 max amps at rated Vac/Hz

V4297S Normally Open Vent Valve for IVT

V4297S are normally open (vent) solenoid gas valves. Suitable for use on furnaces, ovens, atmospheric burners, commercial water heaters, rooftop make-up air units, power burners, and commercial/industrial boilers.

- V4297S is used with 120 Vac controllers.
- Low operating noise.
- Low rush-in current.
- Upstream and downstream taps allows tapping and testing pressure points.
- For use with the Integrated Valve Train.

Type of Fuel: Air; natural; manufactured; mixed; LP
Pressure Tapping: Inlet and outlet pressure taps – 1/4 in. NPT
Body Pattern: Straight-through, non-offset
Valve Opening Time: less than 1 sec
Valve Closing Time: less than 1 sec
Flanges: Required for Stand Alone
Mounting: Directly bolted to Integrated Valve Train Components
Materials: Body – Die-cast aluminum
Voltage: 110 Vac; 120 Vac
Frequency: 50 Hz; 60 Hz
Electrical Connections: Screw terminals
Operating Temperature Range: -40°F to +145°F (-40°C to +63°C)
Approvals, Underwriters Laboratories Inc.: Listed: File No. MH18476, V1, S1 - Guide No. YIOZ

Approvals, CSA: Certificate No. 158158-1154280, Guide No. C3371-03, 04, 83
Approvals, Swiss RE: Acceptable
Pressure Ratings (psi): 5 psi
Pressure Ratings (kPa): 34.5 kPa

Replacement Parts:
4074EYF/U – Bag assembly for V5097 (small body) includes 6 ea bolts, nuts and washers.
4074EYK/U – Bag assembly for V5097 (small body) includes (2) O-rings, (1) grease capsule.
4074EYL/U – Bag assembly for V5097 (large body) includes (2) O-rings, (1) grease capsule.

Dimensions in inches (millimeters)

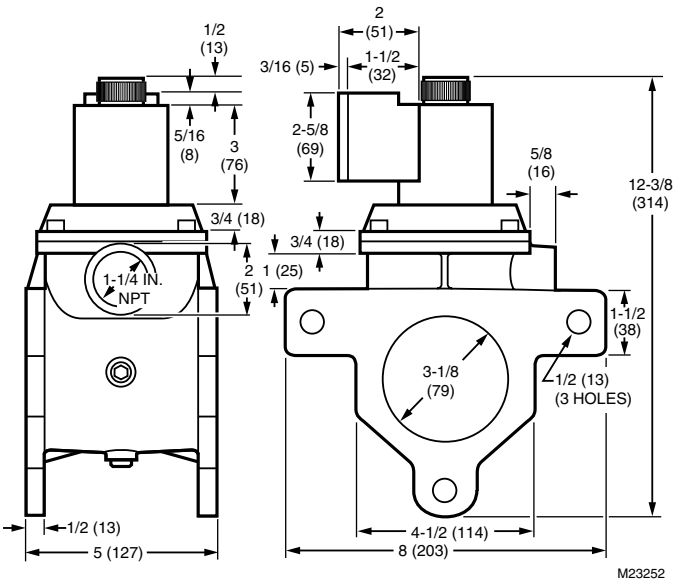

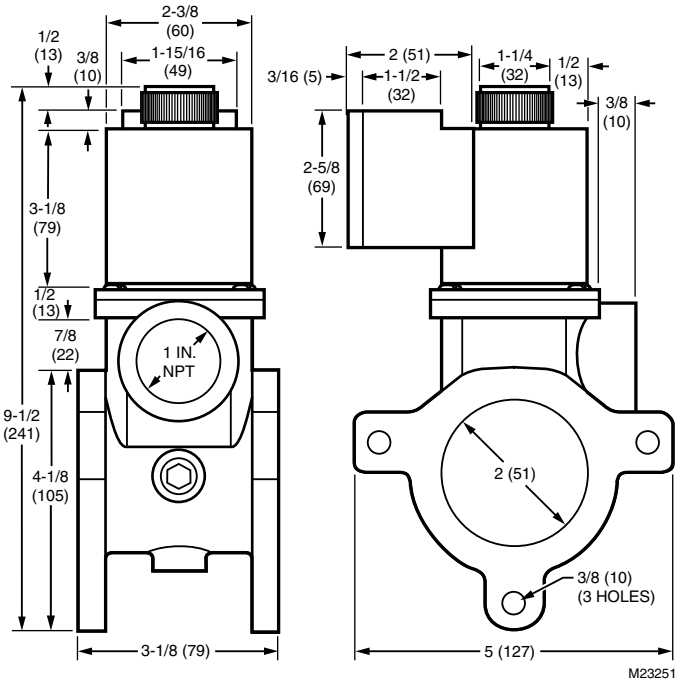

Material Number	Pipe Size (DN)	Capacity (cfh)	Capacity (m^3/hr)	Approximate, Dimensions	Integrated Valve Train Body Size	Current Ratings
V4297S1003	DN25	714 cfh	20.2 m^3/hr	9 1/2 in. high x 3 1/8 in. wide x 5 in. deep (241 mm high x 79 mm wide x 127 mm deep)	Small body	0.2 max amps at rated Vac/Hz
V4297S1011	DN32	1115 cfh	31.6 m^3/hr	12 3/8 in. high x 5 in. wide x 8 in. deep (314 mm high x 127 mm wide x 203 mm deep)	Large body	0.34 max amps at rated Vac/Hz

V4730C; V4734C; V8730C Gas/Air Servo Regulated Gas Valves

Body Pattern: Straight flange
Valve Opening Time: Dead time maximum: 1 second; First valve – < 1 second; Second valve – reaches 50% of the adjustable outlet pressure within 5 seconds
Materials: Body: Aluminum alloy, die-cast
Frequency: 50 Hz; 60 Hz
Ambient Temperature Range: 5°F to 140°F (-15°C to +60°C)
Approvals, Underwriters Laboratories Inc.: File No. MH18476
Approvals, CSA: File: Certificate No: 158158-1227192
Approvals, Others: Gas Appliance Directive: 90.396/EEC, PIN: 0063AT1198, Low Voltage Directive: 73/23/EEC, Electro Magnetic Compatibility Directive: 89/336/EEC
Maximum Safe Operating Pressure (psi): 0.5 psi (CSA approved), 1.45 psi for 120V; 1 psi for 24V (UL approved)
Maximum Operating Pressure (mbar): 200 mbar (UL approved) 100 mbar for 120V; 69 mbar for 24V (UL approved), 35 mbar (CSA approved)
Comments: The minimum load for which the system can be used is 14-17% of the reference load, which equals a minimum pressure differential of 0.2 in. wc (50 Pa) of the 1:1 venturi/servo regulator gas control.
Coil Insulation Solenoid Valves: Class H insulation system
Current Ratings: V1 Current Rating – 0.16A; V2 Current Rating – 0.16A; V1 + V2 Current Rating – 0.32A

Material Number	Pipe Size (inch)	Capacity (kW)	Capacity (kBtuh)	Voltage	Electrical Connections	Pipe Connection	Includes	Max. Capacity with Strainer (cfh)
V4730C1006-0000	1/2 in.	Natural Gas 0.64 sp.gr – 22-150 KW	Natural Gas 0.64 sp.gr – 73-512 kBtuh	120 Vac (+10%, -15%)	Standard DIN plug connector with 36 in. (914 mm) leadwires, included.	1/8 in. (3mm) NPT pressure taps at inlet and outlet flanges. Six flange pressure taps connections are provided at the main body to mount either a pressure switch (low or high) or a Valve Proving System (VPS).	Mesh screen filter and 32006652-001 Flange kit. (Kit includes 1 pipe adapter, 1 O-ring, 4 mounting screws, 1 DIN connector and wiring harness kit.)	Nat. Gas (Delta P= 1 in. w.c.) – 221 cfh
V4730C1014-0000	3/4 in.	Natural Gas 0.64 sp.gr – 43-300 KW	Natural Gas 0.64 sp.gr – 146-1024 kBtuh	120 Vac (+10%, -15%)	Standard DIN plug connector with 36 in. (914 mm) leadwires, included.	1/8 in. (3mm) NPT pressure taps at inlet and outlet flanges. Six flange pressure taps connections are provided at the main body to mount either a pressure switch (low or high) or a Valve Proving System (VPS).	Mesh screen filter and 32006652-002 Flange kit. (Kit includes 1 pipe adapter, 1 O-ring, 4 mounting screws, 1 DIN connector and wiring harness kit.)	Nat. Gas (Delta P= 1 in. w.c.) – 1024 cfh
V4730C1022-0000	1 in.	Natural Gas 0.64 sp.gr – 43-300 KW	Natural Gas 0.64 sp.gr – 146-1024 kBtuh	120 Vac (+10%, -15%)	Standard DIN plug connector with 36 in. (914 mm) leadwires, included.	1/8 in. (3mm) NPT pressure taps at inlet and outlet flanges. Six flange pressure taps connections are provided at the main body to mount either a pressure switch (low or high) or a Valve Proving System (VPS).	Mesh screen filter and 32006652-003 Flange kit. (Kit includes 1 pipe adapter, 1 O-ring, 4 mounting screws, 1 DIN connector and wiring harness kit.)	Nat. Gas (Delta P= 1 in. w.c.) – 1024 cfh
V4730C1030-0000	1 1/4 in.	Natural Gas 0.64 sp.gr – 55-382 KW when used with VMU335, 71-500KW	Natural Gas 0.64 sp.gr – 185-1300 kBtuh when used with VMU335,245-1710 kBtuh	120 Vac (+10%, -15%)	Standard DIN plug connector with 36 in. (914 mm) leadwires, included.	1/8 in. (3mm) NPT pressure taps at inlet and outlet flanges. Six flange pressure taps connections are provided at the main body to mount either a pressure switch (low or high) or a Valve Proving System (VPS).	Mesh screen filter and 32006652-004 Flange kit. (Kit includes 1 pipe adapter, 1 O-ring, 4 mounting screws, 1 DIN connector and wiring harness kit.)	Nat. Gas (Delta P= 1 in. w.c.) – 1300 cfh

Servo Regulated Gas Valves

Material Number	Pipe Size (inch)	Capacity (kW)	Capacity (kBtuh)	Voltage	Electrical Connections	Pipe Connection	Includes	Max. Capacity with Strainer (cfh)
V4734C1002-0000	1 1/4 in.	Natural Gas 0.64 sp.gr – 97-680 KW when used with VMU680	Natural Gas 0.64 sp.gr – 326-2287 kBtuh when used with VMU680	120 Vac (+10%, -15%)			Mesh screen filter and 32006652-004 Flange kit. (Kit includes 1 pipe adapter, 1 O-ring, 4 mounting screws, 1 DIN connector and wiring harness kit.)	
V8730C1007-0000	1/2 in.	Natural Gas 0.64 sp.gr – 22-150 KW	Natural Gas 0.64 sp.gr – 73-512 kBtuh	24 Vac (+10%, -15%)	Standard DIN plug connector with 36 in. (914 mm) leadwires, included.	1/8 in. (3mm) NPT pressure taps at inlet and outlet flanges. Six flange pressure taps connections are provided at the main body to mount either a pressure switch (low or high) or a Valve Proving System (VPS).	Mesh screen filter and 32006652-001 Flange kit. (Kit includes 1 pipe adapter, 1 O-ring, 4 mounting screws, 1 DIN connector and wiring harness kit.)	Nat. Gas (Delta P= 1 in. w.c.) – 221 cfh
V8730C1015-0000	3/4 in.	Natural Gas 0.64 sp.gr – 43-300 KW	Natural Gas 0.64 sp.gr – 146-1024 kBtuh	24 Vac (+10%, -15%)	Standard DIN plug connector with 36 in. (914 mm) leadwires, included.	1/8 in. (3mm) NPT pressure taps at inlet and outlet flanges. Six flange pressure taps connections are provided at the main body to mount either a pressure switch (low or high) or a Valve Proving System (VPS).	Mesh screen filter and 32006652-002 Flange kit. (Kit includes 1 pipe adapter, 1 O-ring, 4 mounting screws, 1 DIN connector and wiring harness kit.)	Nat. Gas (Delta P= 1 in. w.c.) – 1024 cfh
V8730C1023-0000	1 in.	Natural Gas 0.64 sp.gr – 43-300 KW	Natural Gas 0.64 sp.gr – 146-1024 kBtuh	24 Vac (+10%, -15%)	Standard DIN plug connector with 36 in. (914 mm) leadwires, included.	1/8 in. (3mm) NPT pressure taps at inlet and outlet flanges. Six flange pressure taps connections are provided at the main body to mount either a pressure switch (low or high) or a Valve Proving System (VPS).	Mesh screen filter and 32006652-003 Flange kit. (Kit includes 1 pipe adapter, 1 O-ring, 4 mounting screws, 1 DIN connector and wiring harness kit.)	Nat. Gas (Delta P= 1 in. w.c.) – 1024 cfh
V8730C1031-0000	1 1/4 in.	Natural Gas 0.64 sp.gr – 55-382 KW when used with VMU335, 71-500 KW	Natural Gas 0.64 sp.gr – 185-1300 kBtuh when used with VMU335, 245-1710 kBtuh	24 Vac (+10%, -15%)	Standard DIN plug connector with 36 in. (914 mm) leadwires, included.	1/8 in. (3mm) NPT pressure taps at inlet and outlet flanges. Six flange pressure taps connections are provided at the main body to mount either a pressure switch (low or high) or a Valve Proving System (VPS).	Mesh screen filter and 32006652-004 Flange kit. (Kit includes 1 pipe adapter, 1 O-ring, 4 mounting screws, 1 DIN connector and wiring harness kit.)	Nat. Gas (Delta P= 1 in. w.c.) – 1300 cfh

Dimensions in inches (millimeters)

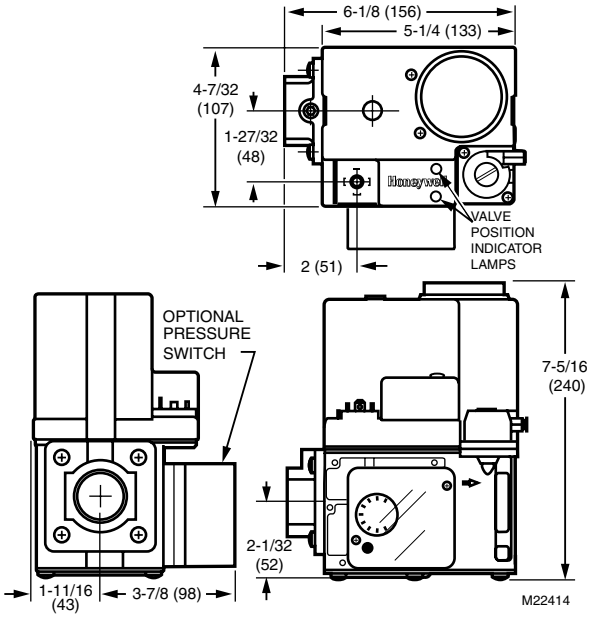

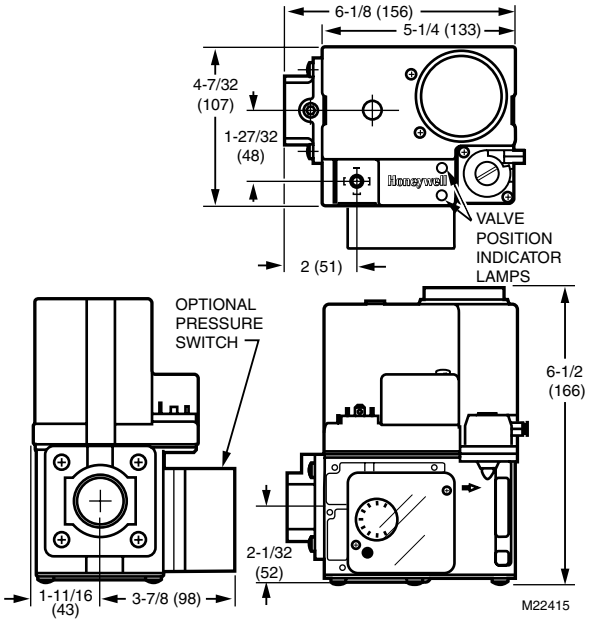

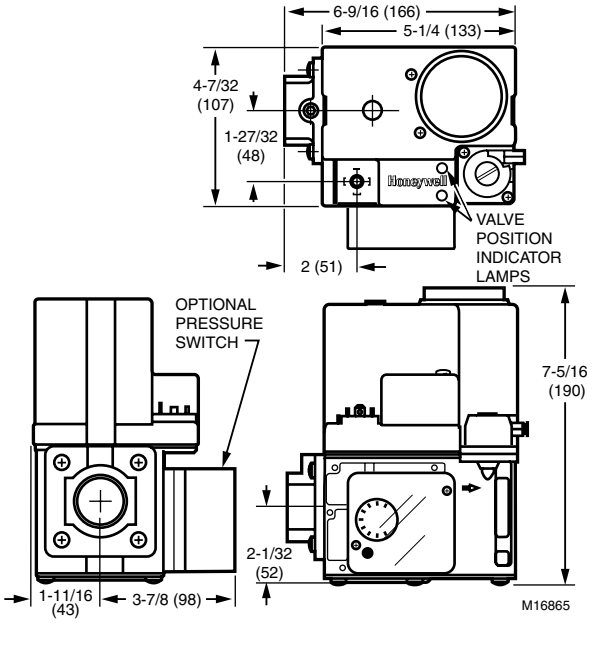

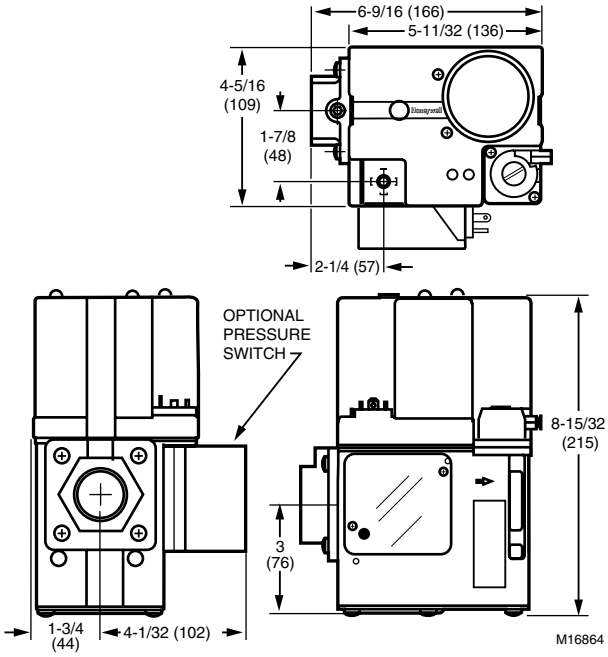

V4730C; V4734C; V8730C Accessories and Parts

Material Number	Description
50002653-001/U	Manual Shut-Off Valve Kit (1 in. NPT or smaller valves)

Venturi Mixing Unit

The venturi mixing unit (VMU), combined with the V4730C/ V8730C gas valves and specific direct current (dc) fan, has been developed for modulating premix appliances like gas burners and gas boilers.

- All adjustment and test points are accessible from one side.
- Has a wide modulation band (14 to 100% of the boiler load).
- Flexible mounting positions of gas control to venturi manifold and venturi manifold to fan.
- Two stainless steel sensing tubes are provided for use with or without manual safety shutoff valve.

Materials: Housing: Aluminum, Venturi: Statically dissipative statcon PF, Seals: Rubber (NBR).
Ambient Temperature Range: 32°F to 212°F (0°C to 100°C)
Approvals, Underwriters Laboratories Inc.: File No. MH18476
Approvals, CSA: File: Certificate No: 158158-1227192
Pipe Connection: Four M5 screws and a rubber O-ring are provided with the venturi to assemble it to the V4730C/V8730C gas valve. The stainless steel tube provided with the venturi has to be connected between the venturi inlet (connection provided) and the gas valve regulator. Longer sensing tube for use with manual safety shutoff valve (KTTBA002). Shorter sensing tube for use without manual safety shutoff valve (KTTBA001).
Current Ratings: V1 Current Rating – 0.16A; V2 Current Rating – 0.16A; V1 + V2 Current Rating – 0.32A

Dimensions in inches (millimeters)

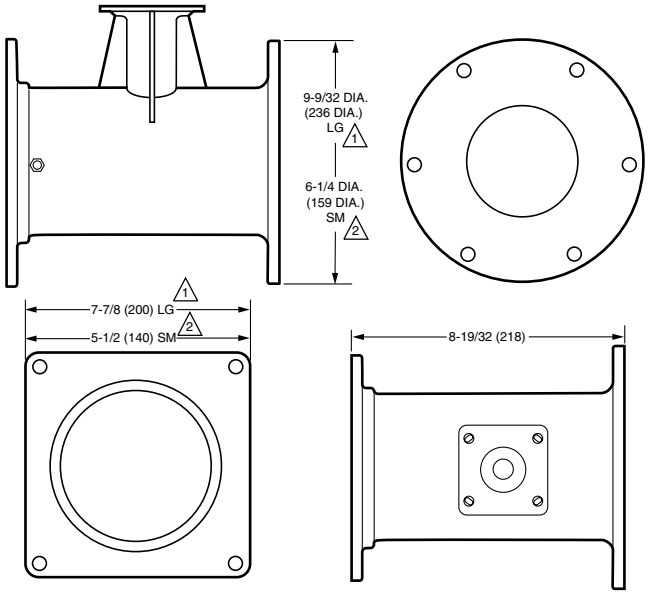

1 LG (LARGE) IS VENTURI MIXING UNIT VMU500.

2 SM (SMALL) ARE VENTURI MIXING UNITS VMU150/300/335.

M22417D

Material Number	Body Pattern	Maximum Safe Operating Pressure (psi)	Maximum Operating Pressure (mbar)	Comments	Reference Load
VMU150A1011	Straight flange	2.9 psi (UL approved), 1/2 psi (CSA approved)	200 mbar (UL approved), 35 mbar (CSA approved)	Pressure Drop: Approximately 3.2 in. wc (800 Pa) across the venturi at reference load. The minimum load for which the system can be used is 14-17% of the reference load, which equals a minimum pressure differential of 0.2 in. wc (50 Pa) of the 1:1 venturi/servo regulator gas control.	150 kW (512,000 Btuh)
VMU185A1084		1/2 psi (CSA approved; 2.9 psi (UL approved)	35 mbar (CSA approved), 200 mbar (UL approved)	Pressure Drop: Approximately 3.2 in. wc (800 Pa) across the venturi at reference load. The minimum load for which the system can be used is 14-17% of the reference load, which equals a minimum pressure differential of 0.2 in. wc (50 Pa) of the 1:1 venturi/servo regulator gas control.	185 kW (632,000 Btuh)
VMU300A1046	Straight flange	2.9 psi (UL approved), 1/2 psi (CSA approved)	200 mbar (UL approved), 35 mbar (CSA approved)	Pressure Drop: Approximately 3.2 in. wc (800 Pa) across the venturi at reference load. The minimum load for which the system can be used is 14-17% of the reference load, which equals a minimum pressure differential of 0.2 in. wc (50 Pa) of the 1:1 venturi/servo regulator gas control.	300 kW (1,024,000 Btuh)
VMU335A1018	Straight flange	2.9 psi (UL approved), 1/2 psi (CSA approved)	200 mbar (UL approved), 35 mbar (CSA approved)	Pressure Drop: Approximately 3.2 in. wc (800 Pa) across the venturi at reference load. The minimum load for which the system can be used is 14-17% of the reference load, which equals a minimum pressure differential of 0.2 in. wc (50 Pa) of the 1:1 venturi/servo regulator gas control.	335 kW (1,143,000 Btuh)

C437D, E 2000 Series Gas Pressure Switches

Dimensions in inches (millimeters)

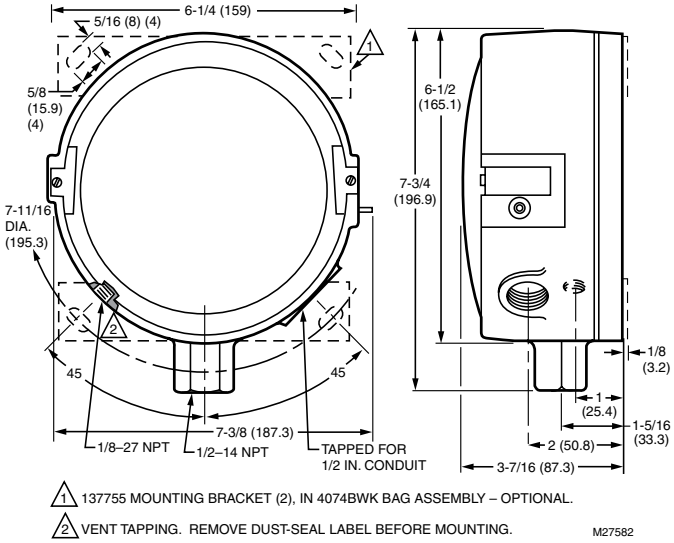

C437D, E Series 2000 Gas Pressure Switches are pressure-actuated devices used in industrial gas systems for safety shutoff. Series 2000 models have snap acting MicroSwitch™ snap switches to open a circuit on pressure rise or drop.

- C437 models have direct- and reverse-acting SPST (non-mercury) switching.
- Models intended for lockout applications must be manually reset before resuming operation.
- Models with pressure range of 1 to 26 in. wc (0.25 to 6.5 kPa) compensate for momentary surges in gas pressure with a restrictive orifice in inlet pressure channel.
- Impede tampering and provide dust-resistant operation with enclosed setting.
- Increase strength of control diaphragm with Buna N fiber-reinforced material.
- Two Buna-N fiber-reinforced seal-off diaphragms for added reliability.
- Clear glass cover allows observation of interior mechanism to aid in setting and checkout.

Application: Industrial gas system applications for safety shutoff, pressure control, or differential-pressure control.
Switch Operation: Manual Reset
Sensor Element: BUNA N Diaphragm
Materials: Case: Die-cast aluminum
Approximate, Dimensions: 7 3/4 in. high x 6 1/4 in. wide x 3 7/16 in. deep (197 mm high x 159 mm wide x 87 mm deep)
Operating Temperature Range: 32°F to 125°F (0°C to 52°C)
Temperature Ratings: 125°F - Maximum Ambient (52°C - Maximum Ambient)
Electrical Connections: Screw terminals
Contact Ratings: 120 Vac Switch Contact – 8.0 AFL, 48.0 ALR, 10.0 A resistive; 240 Vac Switch Contact – 5.1 AFL, 30.6 ALR, 5.0 A resistive
Pipe Connection: Main or High Pressure – 1/2 in. NPT internal thread; Vent or Low pressure – 1/8 in. NPT internal thread
Approvals, Underwriters Laboratories Inc.: Listed: File No. MP2168, Guide No. MFHX
Approvals, CSA: Certified: File No. LR1620, Guide No. 380-W-1.16
Approvals, Factory Mutual: Approved: Report No. 22018, 24127, J.I.IF4A3.AF
Approvals, Swiss RE: Acceptable

Material Number	Operating Range (psi)	Operating Range (kPa)	Differential Pressure Range (psi)	Differential Pressure Range (kPa)	Differential Type	Switching Action
C437D2003/U	1 to 26 in. wc; 5.0 psi - Maximum Sustained	0.5 to 7.0 kPa; 34.5 kPa - Maximum Sustained	1 3/4 in. wc	0.44 kPa	Subtractive	SPST, break on rise, non-mercury
C437D2011/U	1/2 to 5 psi; 15.0 psi - Maximum Sustained	3.0 to 35 kPa; 103.4 kPa - Maximum Sustained	1/2 psi	3.45 kPa	Subtractive	SPST, break on rise, non-mercury
C437D2029/U	1 to 10 psi; 30.0 psi - Maximum Sustained	5.0 to 70.0 kPa; 206.8 kPa - Maximum Sustained	1 psi	6.89 kPa	Subtractive	SPST, break on rise, non-mercury
C437E2002/U	1 to 26 in. wc; 5.0 psi - Maximum Sustained	0.5 to 7.0 kPa; 34.5 kPa - Maximum Sustained	1 3/4 in. wc	0.44 kPa	Additive	SPST, Break on Fall, non-mercury
C437E2010/U	1/2 to 5 psi; 15.0 psi - Maximum Sustained	3.0 to 35 kPa; 103.4 kPa - Maximum Sustained	1/2 psi	3.45 kPa	Additive	SPST, Break on Fall, non-mercury
C437E2028/U	1 to 10 psi; 30.0 psi - Maximum Sustained	5.0 to 70.0 kPa; 206.8 kPa - Maximum Sustained	1 psi	6.89 kPa	Additive	SPST, Break on Fall, non-mercury
C437E2036/U	0.5 to 5.5 in. wc; 3.0 psi - Maximum Sustained	0.1 to 1.4 kPa; 20.7 kPa - Maximum Sustained	0.25 in. wc	0.06 kPa	Additive	SPST, Break on Fall, non-mercury

C6097 Pressure Switch

Dimensions in inches (millimeters)

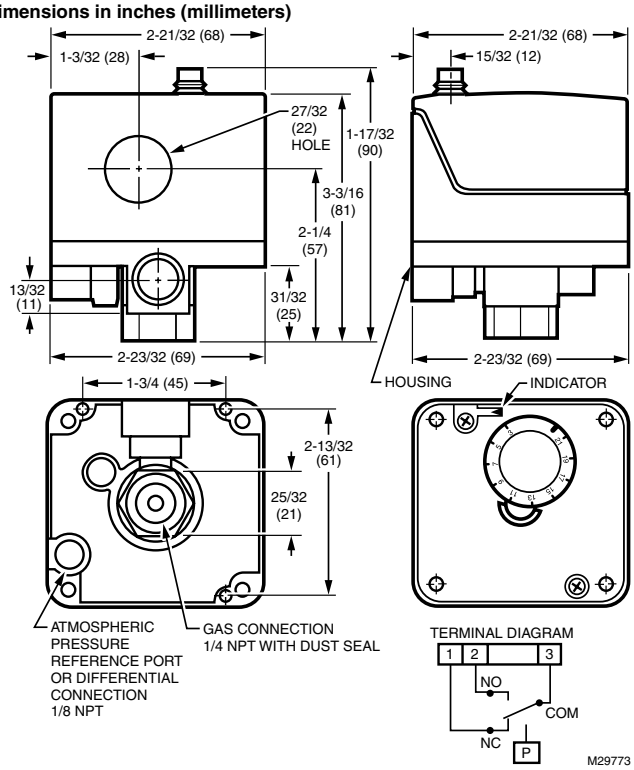

Pressure Switches are safety devices used in positive-pressure or differential-pressure systems to sense gas or air pressure systems.

- For use with natural gas, liquid propane (LP) gas, or air.
- Diaphragm-actuated safety-limit switch.
- Switch can be wired to turn on alarm.
- C6097A models break control circuit at setpoint on pressure fall.
- C6097B models break control circuit at setpoint on pressure rise.
- Lockout with manual reset and recycle options.
- Lockout models have external manual reset button.
- Removable transparent cover protects scaleplate and adjusting knob.
- Pipe tappings allow selection of positive pressure (air only) or venting connections (NPT mount only).
- 1/4 in. NPT or flange mount models for direct mounting to Honeywell Integrated Valve Train.
- Optional switch position indicator lamp available.
- IP54 enclosure standard.
- Ranges: 0.4 to 5 in. wc, 3 to 21 in. wc, 12 to 60 in. wc or 1.5 to 7 psi.
- Surge orifice.
- Integral vent limiter on all models.

Application: Safety devices used in positive-pressure or differential-pressure systems to sense gas or air pressure changes
Operating Temperature Range: -40°F to +140°F (-40°C to +60°C)
Electrical Connections: Screw terminals
Electrical Ratings: Ignition Transformer: 540 VA, Pilot Valve: 50 VA. Main Valve: 400 VA with 2-1/2 times inrush
Contact Ratings: 120 Vac Switch Contact – 3.0 AFL, 18.0 ALR, 5.0 A resistive; 240 Vac Switch Contact – 3.0 AFL, 18.0 ALR, 5.0 A resistive
Approvals, Underwriters Laboratories Inc.: Component Listed, MP 2168-8-1
Approvals, CSA: File # 95329 Certificate 2632-01
Approvals, Factory Mutual: JI 2D4A1.AF
Approvals, Swiss RE: Acceptable
Approvals, Others: CSD-1 AFB: Acceptable

Material Number	Operating Range (psi)	Operating Range (kPa)	Differential Pressure Range (psi)	Differential Pressure Range (kPa)	Differential Type	Switch Operation	Switching Action	Approximate, Dimensions	Pipe Connection	Mounting
C6097A1004/U	0.4 to 5 in. wc	0.10 to 1.25 kPa	0.16 in. wc Nominal; 0.24 in. wc Maximum	0.04 kPa Nominal; 0.06 kPa Maximum	Additive	Auto recycle	Break on pressure fall	3 3/16 in. high x 2 23/32 in. wide x 2 23/32 in. deep (81 mm high x 69 mm wide x 69 mm deep)	Vent or Low pressure – 1/8 in. NPT internal thread	1/4 in. NPT internal thread
C6097A1012/U	3 to 21 in. wc	0.7 to 5.2 kPa	max. 2.4 in. wc @ min. setpoint; max. 4.2 in. wc @ max. setpoint	max. 0.60 kPa @ min. setpoint; max. 1.05 kPa @ max. setpoint	Additive	Manual Reset	Break on pressure fall	3 17/32 in. high x 2 23/32 in. wide x 2 23/32 in. deep (90 mm high x 69 mm wide x 69 mm deep)	Vent or Low pressure – 1/8 in. NPT internal thread	1/4 in. NPT internal thread
C6097A1020/U	3 to 21 in. wc	0.7 to 5.2 kPa	max. 2.4 in. wc @ min. setpoint; max. 4.2 in. wc @ max. setpoint	max. 0.60 kPa @ min. setpoint; max. 1.05 kPa @ max. setpoint	Additive	Manual Reset	Break on pressure fall	2 19/32 in. high x 2 23/32 in. wide x 2 23/32 in. deep (66 mm high x 69 mm wide x 69 mm deep)		Flange Mount
C6097A1038/U	12 to 60 in. wc	3.0 to 15 kPa	max. 10 in. wc @ min. setpoint; max. 12 in. wc @ max. setpoint	max. 2.5 kPa @ min. setpoint; max. 3.0 kPa @ max. setpoint	Additive	Manual Reset	Break on pressure fall	3 17/32 in. high x 2 23/32 in. wide x 2 23/32 in. deep (90 mm high x 69 mm wide x 69 mm deep)	Vent or Low pressure – 1/8 in. NPT internal thread	1/4 in. NPT internal thread

Material Number	Operating Range (psi)	Operating Range (kPa)	Differential Pressure Range (psi)	Differential Pressure Range (kPa)	Differential Type	Switch Operation	Switching Action	Approximate, Dimensions	Pipe Connection	Mounting
C6097A1046/U	12 to 60 in. wc	3.0 to 15 kPa	max. 10 in. wc @ min. setpoint; max. 12 in. wc @ max. setpoint	max. 2.5 kPa @ min. setpoint; max. 3.0 kPa @ max. setpoint:	Additive	Manual Reset	Break on pressure fall	2 19/32 in. high x 2 23/32 in. wide x 2 23/32 in. deep (66 mm high x 69 mm wide x 69 mm deep)		Flange Mount
C6097A1053/U	3 to 21 in. wc	0.7 to 5.2 kPa	0.24 in. wc Nominal; 0.48 in. wc Maximum	0.06 kPa Nominal; 0.12 kPa Maximum	Additive	Auto recycle	Break on pressure fall	3 3/16 in. high x 2 23/32 in. wide x 2 23/32 in. deep (81 mm high x 69 mm wide x 69 mm deep)	Vent or Low pressure – 1/8 in. NPT internal thread	1/4 in. NPT internal thread
C6097A1061/U	3 to 21 in. wc	0.7 to 5.2 kPa	0.24 in. wc Nominal; 0.48 in. wc Maximum	0.06 kPa Nominal; 0.12 kPa Maximum	Additive	Auto recycle	Break on pressure fall	2 1/4 in. high x 2 23/32 in. wide x 2 23/32 in. deep (57 mm high x 69 mm wide x 69 mm deep)		Flange Mount
C6097A1079/U	12 to 60 in. wc	3.0 to 15 kPa	1.1 in. wc Nominal; 2.4 in. wc Maximum	0.27 kPa Nominal; 0.60 kPa Maximum	Additive	Auto recycle	Break on pressure fall	3 3/16 in. high x 2 23/32 in. wide x 2 23/32 in. deep (81 mm high x 69 mm wide x 69 mm deep)	Vent or Low pressure – 1/8 in. NPT internal thread	1/4 in. NPT internal thread
C6097A1087/U	12 to 60 in. wc	3.0 to 15 kPa	1.1 in. wc Nominal; 2.4 in. wc Maximum	0.27 kPa Nominal; 0.60 kPa Maximum	Additive	Auto recycle	Break on pressure fall	2 1/4 in. high x 2 23/32 in. wide x 2 23/32 in. deep (57 mm high x 69 mm wide x 69 mm deep)		Flange Mount
C6097A1095/U	0.4 to 5 in. wc	0.10 to 1.25 kPa	max. 0.6 in. wc @ min. setpoint; max. 0.25 in. wc @ max. setpoint	max. 0.15 kPa @ min. setpoint; max. 0.25 kPa @ max. setpoint	Additive	Manual Reset	Break on pressure fall	3 17/32 in. high x 2 23/32 in. wide x 2 23/32 in. deep (90 mm high x 69 mm wide x 69 mm deep)	Vent or Low pressure – 1/8 in. NPT internal thread	1/4 in. NPT internal thread
C6097A1103/U	1.5 to 7 psi	10.3 to 48 kPa	max. 1.1 psi @ min. setpoint; max. 1.4 psi @ max. setpoint	max. 7.6 kPa @ min. setpoint; max. 9.6 kPa @ max. setpoint	Additive	Manual Reset	Break on pressure fall	2 19/32 in. high x 2 23/32 in. wide x 2 23/32 in. deep (66 mm high x 69 mm wide x 69 mm deep)		Flange Mount
C6097A1111/U	1.5 to 7 psi	10.3 to 48 kPa	max. 1.1 psi @ min. setpoint; max. 1.4 psi @ max. setpoint	max. 7.6 kPa @ min. setpoint; max. 9.6 kPa @ max. setpoint	Additive	Manual Reset	Break on pressure fall	3 17/32 in. high x 2 23/32 in. wide x 2 23/32 in. deep (90 mm high x 69 mm wide x 69 mm deep)	Vent or Low pressure – 1/8 in. NPT internal thread	1/4 in. NPT internal thread
C6097A1129/U	1.5 to 7 psi	10.3 to 48 kPa	0.1 psi Nominal; 0.3 psi Maximum	0.69 kPa Nominal; 2.07 kPa Maximum	Additive	Auto recycle	Break on pressure fall	2 1/4 in. high x 2 23/32 in. wide x 2 23/32 in. deep (57 mm high x 69 mm wide x 69 mm deep)		Flange Mount
C6097A1137/U	1.5 to 7 psi	10.3 to 48 kPa	0.1 psi Nominal; 0.3 psi Maximum	0.69 kPa Nominal; 2.07 kPa Maximum	Additive	Auto recycle	Break on pressure fall	3 3/16 in. high x 2 23/32 in. wide x 2 23/32 in. deep (81 mm high x 69 mm wide x 69 mm deep)	Vent or Low pressure – 1/8 in. NPT internal thread	1/4 in. NPT internal thread
C6097A1210/U	0.4 to 5 in. wc	0.10 to 1.25 kPa	0.16 in. wc Nominal; 0.24 in. wc Maximum	0.04 kPa Nominal; 0.06 kPa Maximum	Additive	Auto recycle	Break on pressure fall	2 1/4 in. high x 2 23/32 in. wide x 2 23/32 in. deep (57 mm high x 69 mm wide x 69 mm deep)		Flange Mount
C6097A1228/U	0.4 to 5 in. wc	0.10 to 1.25 kPa	max. 0.6 in. wc @ min. setpoint; max. 0.25 in. wc @ max. setpoint	max. 0.15 kPa @ min. setpoint; max. 0.25 kPa @ max. setpoint	Additive	Manual Reset	Break on pressure fall	3 17/32 in. high x 2 23/32 in. wide x 2 23/32 in. deep (90 mm high x 69 mm wide x 69 mm deep)	Vent or Low pressure – 1/8 in. NPT internal thread	Flange Mount

Material Number	Operating Range (psi)	Operating Range (kPa)	Differential Pressure Range (psi)	Differential Pressure Range (kPa)	Differential Type	Switch Operation	Switching Action	Approximate, Dimensions	Pipe Connection	Mounting
C6097B1002/U	12 to 60 in. wc	3.0 to 15 kPa	max. 10 in. wc @ min. setpoint; max. 12 in. wc @ max. setpoint	max. 2.5 kPa @ min. setpoint; max. 3.0 kPa @ max. setpoint	Subtractive	Manual Reset	Break on pressure rise	3 17/32 in. high x 2 23/32 in. wide x 2 23/32 in. deep (90 mm high x 69 mm wide x 69 mm deep)	Vent or Low pressure – 1/8 in. NPT internal thread	1/4 in. NPT internal thread
C6097B1010/U	12 to 60 in. wc	3.0 to 15 kPa	max. 10 in. wc @ min. setpoint; max. 12 in. wc @ max. setpoint	max. 2.5 kPa @ min. setpoint; max. 3.0 kPa @ max. setpoint	Subtractive	Manual Reset	Break on pressure rise	2 19/32 in. high x 2 23/32 in. wide x 2 23/32 in. deep (66 mm high x 69 mm wide x 69 mm deep)		Flange Mount
C6097B1028/U	3 to 21 in. wc	0.7 to 5.2 kPa	max. 2.4 in. wc @ min. setpoint; max. 4.2 in. wc @ max. setpoint	max. 0.60 kPa @ min. setpoint; max. 1.05 kPa @ max. setpoint	Subtractive	Manual Reset	Break on pressure rise	3 17/32 in. high x 2 23/32 in. wide x 2 23/32 in. deep (90 mm high x 69 mm wide x 69 mm deep)	Vent or Low pressure – 1/8 in. NPT internal thread	1/4 in. NPT internal thread
C6097B1036/U	3 to 21 in. wc	0.7 to 5.2 kPa	max. 2.4 in. wc @ min. setpoint; max. 4.2 in. wc @ max. setpoint	max. 0.60 kPa @ min. setpoint; max. 1.05 kPa @ max. setpoint	Subtractive	Manual Reset	Break on pressure rise	2 19/32 in. high x 2 23/32 in. wide x 2 23/32 in. deep (66 mm high x 69 mm wide x 69 mm deep)		Flange Mount
C6097B1044/U	1.5 to 7 psi	10.3 to 48 kPa	max. 1.1 in. wc @ min. setpoint; max. 1.4 in. wc @ max. setpoint	max. 7.6 kPa @ min. setpoint; max. 9.6 kPa @ max. setpoint	Subtractive	Manual Reset	Break on pressure rise	2 19/32 in. high x 2 23/32 in. wide x 2 23/32 in. deep (66 mm high x 69 mm wide x 69 mm deep)		Flange Mount
C6097B1051/U	1.5 to 7 psi	10.3 to 48 kPa	max. 1.1 in. wc @ min. setpoint; max. 1.4 in. wc @ max. setpoint	max. 7.6 kPa @ min. setpoint; max. 9.6 kPa @ max. setpoint	Subtractive	Manual Reset	Break on pressure rise	3 3/16 in. high x 2 23/32 in. wide x 2 23/32 in. deep (81 mm high x 69 mm wide x 69 mm deep)	Vent or Low pressure – 1/8 in. NPT internal thread	1/4 in. NPT internal thread
C6097B1069/U	3 to 21 in. wc	0.7 to 5.2 kPa	0.24 in. wc Nominal; 0.48 in. wc Maximum	0.06 kPa Nominal; 0.12 kPa Maximum	Subtractive	Auto recycle	Break on pressure rise	2 1/4 in. high x 2 23/32 in. wide x 2 23/32 in. deep (57 mm high x 69 mm wide x 69 mm deep)		Flange Mount
C6097B1077/U	12 to 60 in. wc	3.0 to 15 kPa	1.1 in. wc Nominal; 2.4 in. wc Maximum	0.27 kPa Nominal; 0.60 kPa Maximum	Subtractive	Auto recycle	Break on pressure rise	2 1/4 in. high x 2 23/32 in. wide x 2 23/32 in. deep (57 mm high x 69 mm wide x 69 mm deep)		Flange Mount
C6097B1085/U	12 to 60 in. wc	3.0 to 15 kPa	1.1 in. wc Nominal; 2.4 in. wc Maximum	0.27 kPa Nominal; 0.60 kPa Maximum	Subtractive	Auto recycle	Break on pressure rise	3 3/16 in. high x 2 23/32 in. wide x 2 23/32 in. deep (81 mm high x 69 mm wide x 69 mm deep)	Vent or Low pressure – 1/8 in. NPT internal thread	1/4 in. NPT internal thread
C6097B1093/U	1.5 to 7 psi	10.3 to 48 kPa	0.1 psi Nominal; 0.3 psi Maximum	0.69 kPa Nominal; 2.07 kPa Maximum	Subtractive	Auto recycle	Break on pressure rise	2 1/4 in. high x 2 23/32 in. wide x 2 23/32 in. deep (57 mm high x 69 mm wide x 69 mm deep)		Flange Mount
C6097B1101/U	1.5 to 7 psi	10.3 to 48 kPa	0.1 psi Nominal; 0.3 psi Maximum	0.69 kPa Nominal; 2.07 kPa Maximum	Subtractive	Auto recycle	Break on pressure rise	3 3/16 in. high x 2 23/32 in. wide x 2 23/32 in. deep (81 mm high x 69 mm wide x 69 mm deep)	Vent or Low pressure – 1/8 in. NPT internal thread	1/4 in. NPT internal thread
C6097B1119/U	3 to 21 in. wc	0.7 to 5.2 kPa	0.24 in. wc Nominal; 0.48 in. wc Maximum	0.06 kPa Nominal; 0.12 kPa Maximum	Subtractive	Auto recycle	Break on pressure rise	3 3/16 in. high x 2 23/32 in. wide x 2 23/32 in. deep (81 mm high x 69 mm wide x 69 mm deep)	Vent or Low pressure – 1/8 in. NPT internal thread	1/4 in. NPT internal thread

L404F Pressuretrol® Controllers

Provide operating control with automatic limit protection for pressure systems up to 300 psi (2068 kPa).

- Use with steam, air, noncombustible gases, or fluids non-corrosive to pressure sensing element.
- Models have snap-acting switching to open or close a circuit on pressure rise.
- Have adjustable differentials.
- Adjustments are made by screws on top of case.
- Mount using 1/4 inch -18 NPT internal pipe threads or surface mount through base of case.
- Ground screw terminal.

Application: Provide control of steam, air, non-combustible gases or non-corrosive fluids
Differential Type: Subtractive
Mounting: 1/4 inch-18 NPT internal thread connection on diaphragm assembly, 1/4 -19 BSPT internal thread on models with BSPT ground screw; or surface mount through back of case
Switch Operation: Auto recycle
Sensor Element: Stainless steel diaphragm standard; Brass Bellows on models with 20 to 300 psi
Operating Temperature Range: -35°F to +150°F (-37°C to +66°C)
Electrical Connections: Screw terminals

Contact Ratings: 120 Vac Switch Contact – 8.0 AFL, 48.0 ALR, 10.0 A resistive; 240 Vac Switch Contact – 5.1 AFL, 30.6 ALR, 5.0 A resistive
Pipe Connection - Main or High Pressure: 1/4 inch-18 NPT internal thread standard; 1/4 -19 BSPT internal thread on models with BSPT ground screw
Approvals, Underwriters Laboratories Inc.: Listed: File No. MP466, Guide No. MBPR
Approvals, CSA: Certified: File No. LR1620, Guide No. 400-E-O; or Certified: File No. LR95329 for Miss-wiring Compliant models
Approvals, Swiss RE: Acceptable

Material Number	Operating Range (psi)	Operating Range (kPa)	Maximum Sustained Pressure (psi)	Maximum Sustained Pressure (kPa)	Differential Pressure Range (psi)	Differential Pressure Range (kPa)	Switching Action	Includes	Comments
L404F1060/U	2 to 15 psi	14 to 103 kPa	25 psi	172 kPa	2 to 6 psi	14 to 41 kPa	SPDT snap action, make R-W, break R-B on pressure rise		
L404F1078/U	5 to 50 psi	35 to 345 kPa	85 psi	586 kPa	6 to 14 psi	41 to 97 kPa	SPDT snap action, make R-W, break R-B on pressure rise		
L404F1094/U	20 to 300 psi	138 to 2068 kPa	350 psi	2413 kPa	20 to 50 psi	138 to 345 kPa	SPDT snap action, make R-W, break R-B on pressure rise		
L404F1102/U	10 to 150 psi	69 to 1034 kPa	225 psi	1151 kPa	10 to 22 psi	60 to 152 kPa	SPDT snap action, make R-W, break R-B on pressure rise		
L404F1219/U	2 to 15 psi	14 to 103 kPa	25 psi	172 kPa	2 to 6 psi	14 to 41 kPa	SPDT snap action, make R-W, break R-B on pressure rise	BSPT ground screw and European Enclosure	
L404F1227/U	10 to 150 psi	69 to 1034 kPa	225 psi	1151 kPa	10 to 22 psi	60 to 152 kPa	SPDT snap action, make R-W, break R-B on pressure rise	BSPT ground screw and European Enclosure	
L404F1235/U	20 to 300 psi	138 to 2068 kPa	350 psi	2413 kPa	20 to 50 psi	138 to 345 kPa	SPDT snap action, make R-W, break R-B on pressure rise	BSPT ground screw and European Enclosure	
L404F1243/U	5 to 50 psi	35 to 345 kPa	85 psi	586 kPa	6 to 14 psi	41 to 97 kPa	SPDT snap action, make R-W, break R-B on pressure rise	BSPT ground screw and European Enclosure	
L404F1367/U	1 to 8 psi	7 to 55 kPa	25 psi	172 kPa	0.75 to 2 psi	5 to 14 kPa	Snap switch breaks R-B (closes R-W) on pressure rise. Make-on devices omit terminal B.		Range Stop installed at 8 PSI
L404F1375/U	5 to 50 psi	35 to 350 kPa	85 psi	586 kPa	6 to 14 psi	40 to 100 kPa	Snap switch makes R-W on pressure rise	Miss-wiring Compliant (less B terminal)	
L404F1383/U	10 to 150 psi	70 to 1035 kPa	225 psi	1151 kPa	10 to 22 psi	70 to 150 kPa	Snap switch makes R-W on pressure rise	Miss-wiring Compliant (less B terminal)	
L404F1391/U	20 to 300 psi	140 to 2070 kPa	350 psi	2413 kPa	20 to 50 psi	140 to 345 kPa	Snap switch makes R-W on pressure rise	Miss-wiring Compliant (less B terminal)	
L404F1409/U	2 to 15 psi	14 to 103 kPa	25 psi	172 kPa	2 to 6 psi	15 to 40 kPa	Snap switch makes R-W on pressure rise	Miss-wiring Compliant (less B terminal)	

Dimensions in inches (millimeters)

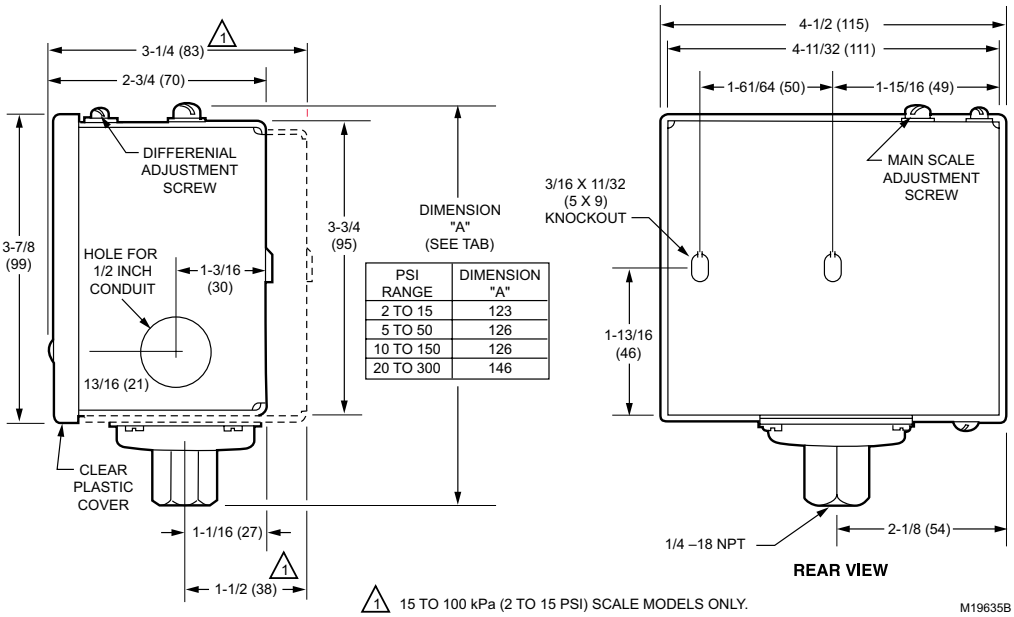

PSI RANGE	DIMENSION "A"
2 TO 15	123
5 TO 50	126
10 TO 150	126
20 TO 300	146

L404T, V Oil Pressuretrol® Limit Controllers

Oil pressure sensing devices for use on oil burner systems using any type of fuel oil, including heavy pretreated oils.

- Clear plastic cover allows observation of the pressure settings.
- Models have snap-acting switching to open or close a circuit on pressure rise.
- L404T High pressure limit, break a circuit on oil pressure rise above setpoint.
- L404V Low Pressure limit, makes a circuit on oil pressure rise above setpoint.
- Adjustments are made by screws on top of case.
- Mount using 1/4 inch -18 NPT internal pipe threads or surface mount through base of case.
- Ground screw terminal.

Application: Oil pressure limit switch for fuel oil, including heavy oil applications
Differential Type: Subtractive
Mounting: 1/4 in. NPT internal thread or surface mount through back of case
Switch Operation: Auto recycle
Sensor Element: Stainless Steel diaphragm
Approximate, Dimensions: 4 31/32 in. high x 4 1/2 in. wide x 2 3/4 in. deep (126 mm high x 114 mm wide x 70 mm deep)

Operating Temperature Range: -35°F to +150°F (-37°C to +66°C)
Electrical Connections: Screw terminals
Contact Ratings: 120 Vac Switch Contact – 8.0 AFL, 48.0 ALR, 10.0 A resistive; 240 Vac Switch Contact – 5.1 AFL, 30.6 ALR, 5.0 A resistive;
Pipe Connection: Main or High Pressure – 1/4 in. NPT internal thread
Approvals, Underwriters Laboratories Inc.: Listed: File No. MP2168, Guide No. MFHX
Approvals, CSA: Certified: File No. LR95329

Dimensions in inches (millimeters)

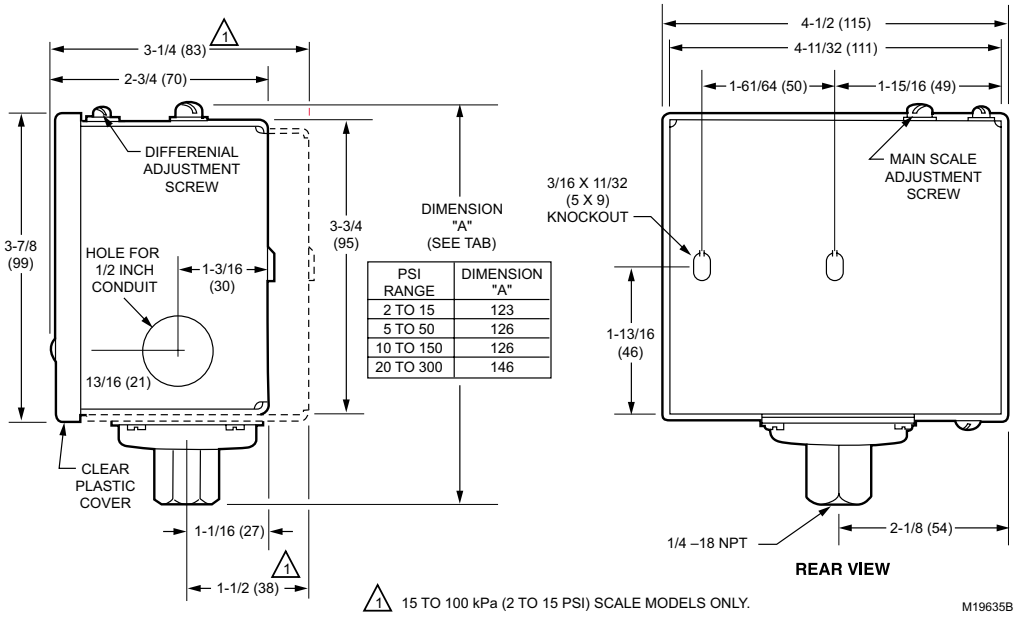

PSI RANGE	DIMENSION "A"
2 TO 15	123
5 TO 50	126
10 TO 150	126
20 TO 300	146

1 15 TO 100 kPa (2 TO 15 PSI) SCALE MODELS ONLY.

Material Number	Operating Range (psi)	Operating Range (kPa)	Differential Pressure Range (psi)	Differential Pressure Range (kPa)	Switching Action	Includes
L404T1055/U	5 to 50 psi; 85 psi - Maximum Sustained	35 to 350 kPa; 586 kPa - Maximum Sustained	6 to 14 psi	40 to 100 kPa	SPST snap-acting break on pressure rise	
L404T1063/U	10 to 150 psi; 225 psi - Maximum Sustained	70 to 1035 kPa; 1151 kPa - Maximum Sustained	10 to 22 psi	70 to 150 kPa	SPST snap-acting break on pressure rise	
L404V1087/U	10 to 150 psi; 225 psi - Maximum Sustained	70 to 1035 kPa; 1151 kPa - Maximum Sustained	10 to 22 psi	70 to 150 kPa	Snap switch makes R-W on pressure rise	Miss-wiring Compliant (less B terminal)
L404V1095/U	5 to 50 psi; 85 psi - Maximum Sustained	35 to 350 kPa; 586 kPa - Maximum Sustained	6 to 14 psi	40 to 100 kPa	Snap switch makes R-W on pressure rise	Miss-wiring Compliant (less B terminal)

L4079 Pressuretrol® Limit Controllers

High pressure limit switches.

- Stainless steel diaphragm for use with steam, air, noncombustible gases and fluids non-corrosive to stainless steel.
- L4079W is for Oil Applications.
- Micro Switch™ snap-acting switches open automatically on pressure rise; must be manually reset.
- Mount using 1/4 in. NPT female fitting on diaphragm assembly or surface mount through back of case.

Mounting: 1/4 in. NPT internal thread or surface mount through back of case
Sensor Element: Stainless Steel diaphragm
Approximate, Dimensions: 5 in. high x 4 1/2 in. wide x 3 1/2 in. deep. (127 mm high x 114 mm wide x 89 mm deep.)
Temperature Ratings: 150°F - Maximum Ambient (66°C - Maximum Ambient)
Electrical Connections: Screw terminals
Contact Ratings: 120 Vac Switch Contact – 9.8 AFL, 58.8 ALR; 240 Vac Switch Contact – 4.9 AFL, 29.4 ALR
Pipe Connection: Main or High Pressure – 1/4 in. NPT internal thread
Approvals, Underwriters Laboratories Inc.: Listed: File No. MP466, Guide No. MBPR
Approvals, Swiss RE: Acceptable

Dimensions in inches (millimeters)

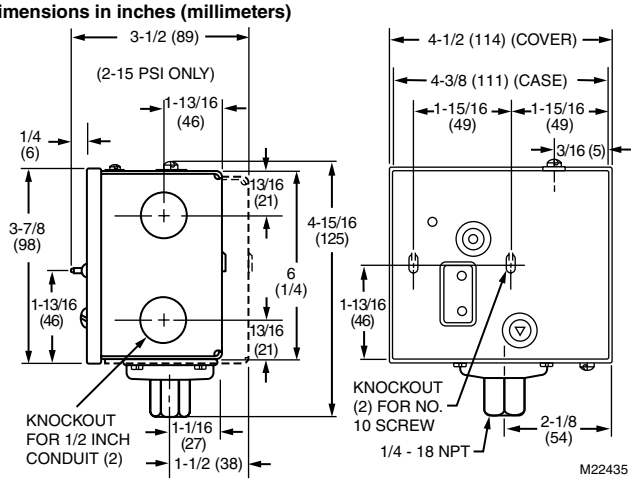

Material Number	Application	Operating Range (psi)	Operating Range (kPa)	Switch Operation	Switching Action
L4079A1035/U	Provide limit control of steam, air, non-combustible gases or non-corrosive fluids	2 to 15 psi; 25 psi - Maximum Sustained	14 to 103 kPa; 172 kPa - Maximum Sustained	Manual Reset	SPST (two) break simultaneously on pressure rise
L4079A1050/U	Provide limit control of steam, air, non-combustible gases or non-corrosive fluids	10 to 150 psi; 225 psi - Maximum Sustained	69 to 1034 kPa; 1151 kPa - Maximum Sustained	Manual Reset	SPST (two) break simultaneously on pressure rise
L4079B1033/U	Provide limit control of steam, air, non-combustible gases or non-corrosive fluids	2 to 15 psi; 25 psi - Maximum Sustained	14 to 103 kPa; 172 kPa - Maximum Sustained	Manual Reset	SPST break on pressure rise
L4079B1041/U	Provide limit control of steam, air, non-combustible gases or non-corrosive fluids	10 to 150 psi; 225 psi - Maximum Sustained	70 to 1035 kPa; 1151 kPa - Maximum Sustained	Manual Reset	SPST break on pressure rise
L4079B1058/U	Provide limit control of steam, air, non-combustible gases or non-corrosive fluids	5 to 50 psi; 85 psi - Maximum Sustained	35 to 350 kPa; 586 kPa - Maximum Sustained	Manual Reset	SPST break on pressure rise
L4079B1066/U	Provide limit control of steam, air, non-combustible gases or non-corrosive fluids	20 to 300 psi; 350 psi - Maximum Sustained	140 to 2070 kPa; 2413 kPa - Maximum Sustained	Manual Reset	SPST break on pressure rise
L4079W1000/U	High oil pressure limit switch for heavy oil applications.	10 to 150 psi; 225 psi - Maximum Sustained	35 to 350 kPa; 1151 kPa - Maximum Sustained	Manual Reset	SPST break on pressure rise - Oil Applications

L408J Vaporstat® Controllers

Provide operating control and automatic high limit protection for vapor heating systems with pressures up to 4 psi (8 kPa). All models have Microswitch snap switches to open or close a circuit on a pressure rise.

- Stainless steel diaphragm for use with liquids, air, noncombustible gases, ammonia, oxygen, distilled water and similar media.
- Provide SPDT switching.
- Clear plastic cover allows observation of the pressure settings.
- Mount using hexagonal fitting with 1/4 in. NPT internal threads for direct mounting to the 14026 (steel) or 50024585-001 (brass) Steam Trap (siphon loop).
- Ground Screw terminal.

Application: Provide operating control and automatic limit protection for pressure systems with pressures up to 4 psi (8 kPa)
Differential Type: Subtractive
Mounting: 1/4 in. NPT internal thread or surface mount through back of case
Sensor Element: Stainless Steel diaphragm
Approximate, Dimensions: 5 1/8 in. high x 4 1/2 in. wide x 4 1/2 in. deep. (130 mm high x 114 mm wide x 114 mm deep.)
Operating Temperature Range: -35°F to +150°F (-37°C to +66°C)

Electrical Connections: Screw terminals
Contact Ratings: 120 Vac Switch Contact – 8.0 AFL, 48.0 ALR, 10.0 A resistive; 240 Vac Switch Contact – 5.1 AFL, 30.6 ALR, 5.0 A resistive
Pipe Connection: Main or High Pressure – 1/4 in. NPT internal thread
Approvals, Underwriters Laboratories Inc.: Listed: File No. MP466, Guide No. MBPR
Approvals, CSA: Certified: File No. LR1620, Guide No. 400-E-O
Approvals, Swiss RE: Acceptable

Dimensions in inches (millimeters)

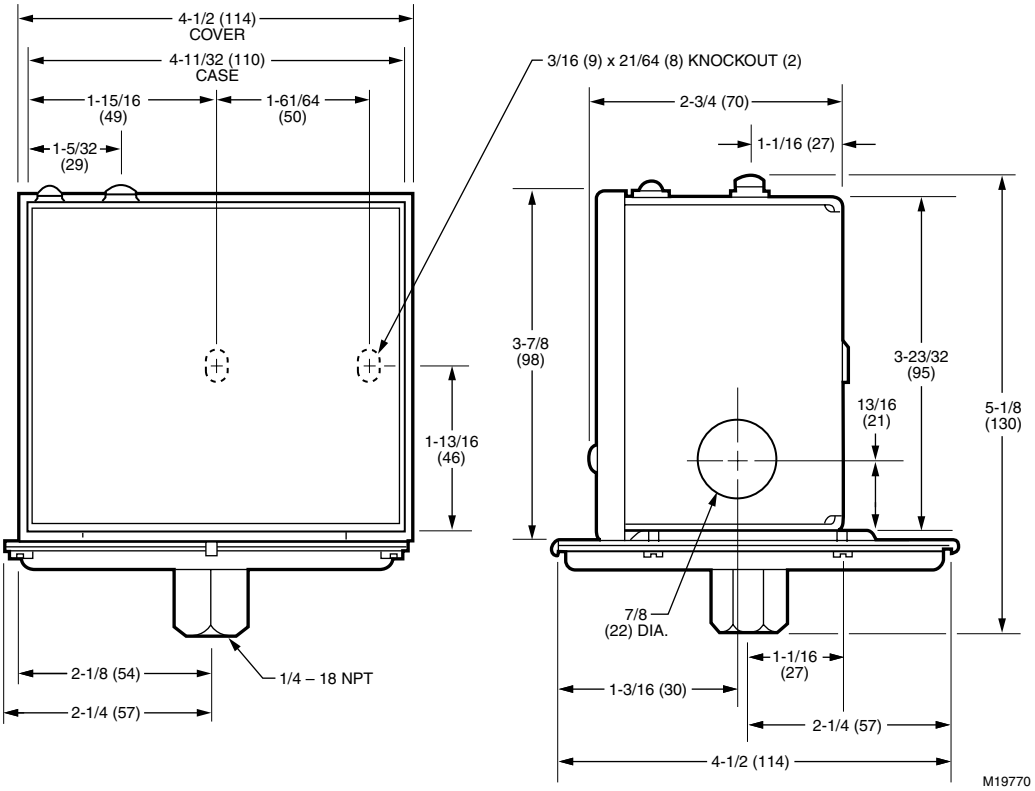

Material Number	Operating Range (psi)	Operating Range (kPa)	Differential Pressure Range (psi)	Differential Pressure Range (kPa)	Switch Operation	Switching Action	Comments
L408J1009/U	0 to 16 oz/in2	0 to 6.9 kPa	2 to 16 oz/in2	0.9 to 6.9 kPa	Auto recycle	SPDT make R-W, break R-B on pressure rise	
L408J1017/U	0 to 4 psi	0 to 28 kPa	2 to 16 oz/in2	0.9 to 6.9 kPa	Auto recycle	SPDT make R-W, break R-B on pressure rise	
L408J1025/U	0 to 16 oz/in2	0 to 6.9 kPa	2 to 16 oz/in2	0.9 to 6.9 kPa	Auto recycle	SPST make on pressure rise Only	Miss-wiring Compliant
L408J1033/U	0 to 4 psi	0 to 28 kPa	2 to 16 oz/in2	0.9 to 6.9 kPa	Auto recycle	SPST make on pressure rise Only	Miss-wiring Compliant

L91 Proportional Pressuretrol® Controllers

Modulating pressure operating control for regulation of liquid or air and other non-corrosive gases.

- Use with steam, air, noncombustible gases, or other fluids non-corrosive to the brass or phos-bronze (300 psi models) bellows.
- Do NOT use with combustible mediums or any medium chemically harmful to phos-bronze bellows (10-300 psi models) or brass bellows (all other pressure range models).

Application: Modulating pressure control for regulation of liquid, air, or other non-corrosive gases.
Switch Operation: Modulating
Operating Temperature Range: 32°F to 150°F (0°C to 66°C)
Electrical Connections: Screw terminals
Pipe Connection: Main or High Pressure – 1/4 in. NPT external thread

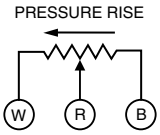

L91A,B

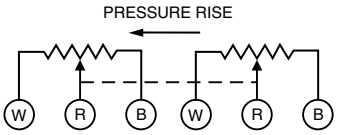

L91D

M16597

Material Number	Operating Range (psi)	Operating Range (kPa)	Differential Pressure Range (psi)	Differential Pressure Range (kPa)	Mounting	Sensor Element	Approximate, Dimensions	Modulation Output
L91A1037/U	0 to 15 psi; 25 psi - Maximum Sustained	0 to 103 kPa; 172 kPa - Maximum Sustained	0.5 psi	3.4 kPa	optional surface mount through back of case	Brass bellows	6 7/8 in. high x 4 1/2 in. wide x 2 7/8 in. deep (175 mm high x 114 mm wide x 73 mm deep)	Single potentiometer, 140 ohms
L91A1052/U	5 to 150 psi; 225 psi - Maximum Sustained	34 to 1034 kPa; 1151 kPa - Maximum Sustained	5 psi	34 kPa	optional surface mount through back of case	Brass bellows	5 3/4 in. high x 4 1/2 in. wide x 2 3/4 in. deep (146 mm high x 114 mm wide x 70 mm deep)	Single potentiometer, 140 ohms
L91A1078/U	10 to 300 psi; 325 psi - Maximum Sustained	69 to 2068 kPa; 2241 kPa - Maximum Sustained	12 psi	83 kPa	optional surface mount through back of case	Phos-bronze bellows	6 1/16 in. high x 4 1/2 in. wide x 2 3/4 in. deep (154 mm high x 114 mm wide x 70 mm deep)	Single potentiometer, 140 ohms
L91A1136/U	10 to 300 psi; 325 psi - Maximum Sustained	69 to 2068 kPa; 2241 kPa - Maximum Sustained	12 psi	83 kPa	optional surface mount through back of case	Phos-bronze bellows	6 1/16 in. high x 4 1/2 in. wide x 2 3/4 in. deep (154 mm high x 114 mm wide x 70 mm deep)	Single potentiometer, 140 ohms
L91B1035/U	0 to 15 psi; 25 psi - Maximum Sustained	0 to 103 kPa; 172 kPa - Maximum Sustained	1.5 to 12 psi	10 to 83 kPa	optional surface mount through back of case	Brass bellows	6 7/8 in. high x 4 1/2 in. wide x 2 7/8 in. deep (175 mm high x 114 mm wide x 73 mm deep)	Single potentiometer, 140 ohms
L91B1050/U	5 to 150 psi; 225 psi - Maximum Sustained	34 to 1034 kPa; 1151 kPa - Maximum Sustained	5 to 23 psi	35 to 160 kPa	optional surface mount through back of case	Brass bellows	5 3/4 in. high x 4 1/2 in. wide x 2 3/4 in. deep (146 mm high x 114 mm wide x 70 mm deep)	Single potentiometer, 140 ohms
L91B1068/U	10 to 300 psi; 325 psi - Maximum Sustained	69 to 2068 kPa; 2241 kPa - Maximum Sustained	28 to 110 psi	193 to 758 kPa	optional surface mount through back of case	Phos-bronze bellows	6 1/16 in. high x 4 1/2 in. wide x 2 3/4 in. deep (154 mm high x 114 mm wide x 70 mm deep)	Single potentiometer, 140 ohms
L91B1100/U	5 to 150 psi; 225 psi - Maximum Sustained	0 - 1 MPa; 1151 kPa - Maximum Sustained	5 to 23 psi	35 to 160 kPa	1/4 in BSP-TR thread Mounting	Brass bellows	5 3/4 in. high x 4 1/2 in. wide x 2 3/4 in. deep (146 mm high x 114 mm wide x 70 mm deep)	Single potentiometer, 135 ohms
L91B1118/U	10 to 300 psi; 325 psi - Maximum Sustained	0 - 2 MPa; 2241 kPa - Maximum Sustained	28 to 110 psi	193 to 758 kPa	1/4 in BSP-TR thread Mounting	Phos-bronze bellows	6 1/16 in. high x 4 1/2 in. wide x 2 3/4 in. deep (154 mm high x 114 mm wide x 70 mm deep)	Single potentiometer, 140 ohms
L91B1241/U	10 to 300 psi; 325 psi - Maximum Sustained	69 to 2068 kPa; 2241 kPa - Maximum Sustained	12 to 48 psi	85 to 330 kPa	optional surface mount through back of case	Phos-bronze bellows	6 1/16 in. high x 4 1/2 in. wide x 2 3/4 in. deep (154 mm high x 114 mm wide x 70 mm deep)	Single potentiometer, 140 ohms
L91D1015/U	0 to 15 psi; 25 psi - Maximum Sustained	0 to 103 kPa; 172 kPa - Maximum Sustained	1.5 to 12 psi	10 to 83 kPa	optional surface mount through back of case	Brass bellows	6 7/8 in. high x 4 1/2 in. wide x 2 7/8 in. deep (175 mm high x 114 mm wide x 73 mm deep)	Dual potentiometer, 140 ohms
L91D1031/U	5 to 150 psi; 225 psi - Maximum Sustained	34 to 1034 kPa; 1151 kPa - Maximum Sustained	11 to 52 psi	76 to 359 kPa	optional surface mount through back of case	Brass bellows	5 3/4 in. high x 4 1/2 in. wide x 2 3/4 in. deep (146 mm high x 114 mm wide x 70 mm deep)	Dual potentiometer, 140 ohms

Dimensions in inches (millimeters)

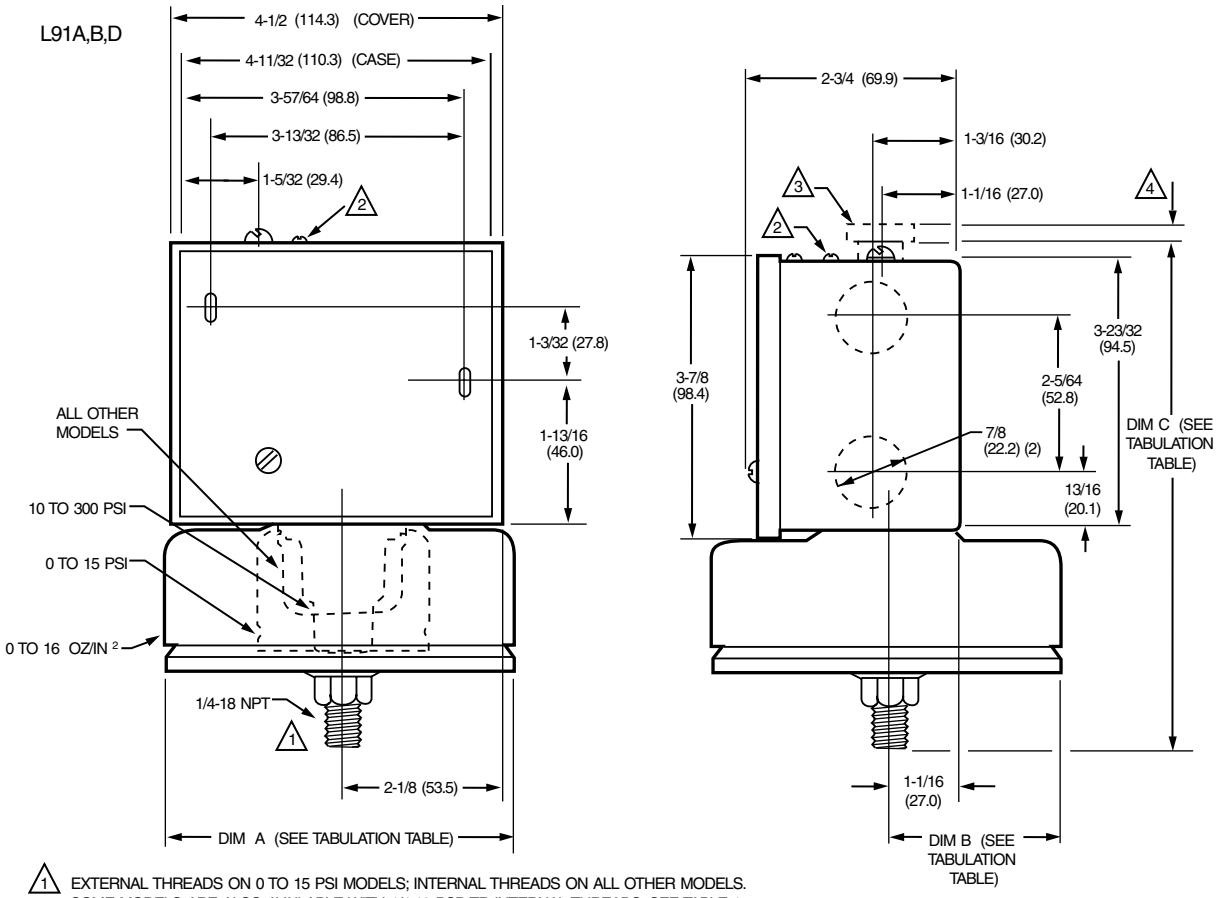

1 EXTERNAL THREADS ON 0 TO 15 PSI MODELS; INTERNAL THREADS ON ALL OTHER MODELS. SOME MODELS ARE ALSO AVAILABLE WITH 1/4-19 BSP-TR INTERNAL THREADS; SEE TABLE 1.

2 PROPORTIONING RANGE ADJUSTING SCREW ON L91B,D MODELS ONLY.

3 33312B KNURLED ADJUSTMENT SCREW KNOB, 7/8 IN. [22.2 MM] DIAMETER,. KNOB IS INCLUDED WITH 10 TO 300 PSI [0.07 TO .07 MPa] MODELS; OPTIONAL ACCESSORY FOR OTHER MODELS.

4 FOR 10 TO 300 PSI [0.07 TO 2.07 MPa] MODELS. DIM C INCLUDES THE KNURLED ADJUSTMENT KNOB.

TABULATION OF DIMENSIONS A, B, AND C

OPERATING RANGE		DIM A		DIM B		DIM C	
CUSTOMARY UNITS	METRIC UNITS	IN.	MM	IN.	MM	IN.	MM
0 TO 15 PSI	0 TO 103 kPa	2-7/16	61.9	1-7/32	31.0	6-7/8	174.6
5 TO 150 PSI	0.03 TO 1.03 MPa	1-5/8	41.3	13/16	20.6	5-3/4	146.1
10 TO 300 PSI	0.07 to 2.07 MPa	1-1/4	31.8	5/8	15.9	6-1/16 4	154.0 4

M29781

P7810 Pressure Control

Line voltage pressure controller that provides automatic operating control, automatic limit protection, manual reset limit protection, and 4-20 mA modulating firing rate control for pressure systems up to 300 psi.

- May be used with steam, air, non-combustible gases or fluids that will not corrode the pressure sensing element.
- Models available in 15, 150, 300 psi maximum setpoints.
- LED indicators show limit function/lockout.
- Reset function easily accessible under cover.
- Clear cover allows setpoint and differentials to be read (but not adjusted) without opening the cover.

Application: On-off, Modulate and Limit Control
Sensor Element: Stainless Steel, solid state sensor
Materials: Case: Plastic
Approximate, Dimensions: 5 1/4 in. high x 4 21/32 in. wide x 3 3/8 in. deep (133 mm high x 119 mm wide x 86 mm deep)
Voltage: 120 Vac
Frequency: 50 Hz; 60 Hz
Power Consumption: 3.6 W, 4.7 VA @ 50Hz; 3.3 W, 4.0 VA @ 60 Hz
Operating Temperature Range: 32°F to 140°F (0°C to +60°C)
Operating Humidity Range (% RH): 5 to 95% RH, non-condensing
Electrical Connections: Screw terminals

Contact Ratings: 120 Vac Switch Contact – 9.8 AFL, 58.8 ALR, 10.0 A resistive
Pipe Connection: Main or High Pressure – 1/2 in. NPT internal thread
Approvals, Underwriters Laboratories Inc.: Listed: File No. MP268, Guide No. MCCZ
Approvals, CSA: Certified: File No. LR95329-6
Approvals, Factory Mutual: Approved: Report No. J.I.2D3A6AF
Modulation Output: 4 mA to 20 mA

Dimensions in inches (millimeters)

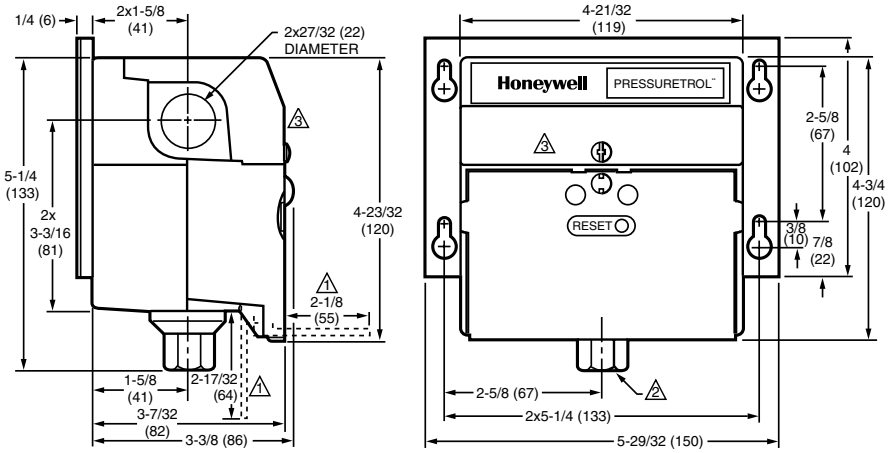

1 DIMENSIONS WITH DOOR IN OPEN POSITION.
2 PIPE THREAD IS 1/4 INCH NATIONAL PIPE THREAD FOR P7810A,B; 1/2 INCH NATIONAL PIPE THREAD FOR P7810C,D.
3 WIRING COMPARTMENT ACCESS COVER.

M23225

Material Number	Operating Range (psi)	Operating Range (kPa)	Differential Pressure Range (psi)	Differential Pressure Range (kPa)	Switching Action
P7810C1000/U	0 to 15 psi; 22.5 psi - Maximum Sustained	0 to 103 kPa; 155 kPa - Maximum Sustained	2 to 10 psi	14 to 69 kPa	Break on pressure rise
P7810C1018/U	0 to 150 psi; 225 psi - Maximum Sustained	0 to 1034 kPa; 1151 kPa - Maximum Sustained	5 to 20 psi	35 to 135 kPa	Break on pressure rise
P7810C1026/U	0 to 300 psi; 450 psi - Maximum Sustained	0 to 2068 kPa; 3103 kPa - Maximum Sustained	15 to 50 psi	103 to 340 kPa	Break on pressure rise

Pressure Controls and Limits Accessories

Material Number	Description	Used With
106729/U	C437, C637 Glass Lens, 6" diameter	C437, C637
129178E/U	Cover Assembly	L404, L604
137632/U	C437, C637 Paper Lens Gasket	C437, C637
139870/U	C437, C637 Lens Gasket for Rainproof Models	C437, C637
139870A/U	Glass lens with rubber gasket for NEMA 3 C437 and C637.	C437, C637
14026/U	Steam Trap “Black Iron Siphon Loop” for L404, L408, L91 or P7810A, B	L404, L91, L604
209731A/U	1/2 in. NPT Brass Siphon Loop for P7810C, D	P7810C, P7810D
23176CB/U	L91 Potentiometer - 135 ohm	L91
23176CF/U	L91 Potentiometer - 135 ohm	L91
32003039-001/U	C6097 Lamp Kit, Position Indication	C6097
32003040-001/U	C6097 Cover, Recycle Model	C6097
32003041-001/U	C6097 Cover, Manual Reset Model	C6097
4074BWJ/U	Pressure Control/Limits, Limit Stop Assembly - to limit setpoint. Includes 129564 Range Stop, 107194 Range Stop Screw and 23466 Wrench.	L404, L604, L91, L4079
50024585-001/U	Steam Trap “1/4 in. NPT Brass Siphon Loop” for L404, L408, or L91	L404, L91, L604

RM7895 On-Off Primary Control with Prepurge

Microprocessor-based integrated primary burner control for automatically fired gas, oil, or combination fuel single burner applications. Provides level of safety, functional capability and features beyond conventional controls.

- Functions include automatic burner sequencing, flame supervision, system status indication, system or self-diagnostics and troubleshooting
- Subbase, amplifier, and prepurge timer are required for operation
- Options include PC interface using ModBus™, keyboard display module, Data ControlBus™ Module, remote display module and first-out expanded annunciator
- Five LEDs provide sequence information
- Interchangeable plug-in flame amplifiers
- Optional local or remote annunciation of operation and fault information
- Nonvolatile memory retains history files and sequencing status after power loss
- Optional remote reset capability
- Optional report generation using Modbus™
- Selectable relight or lockout on loss of flame
- Airflow switch check

Honeywell	RA890, R4795, R7795	All 120 V models.
Fireye	M-Series	

IMPORTANT: *For on-off, gas-fired systems, some authorities having jurisdiction prohibit the wiring of any limit or operating contacts in series with the main fuel valve(s).*

DIRECTIONS:

1. Disconnect all power to programmer.
2. Remove old programmer from subbase (trade-in to Honeywell Authorized Flame Safeguard Distributor).
3. Mark all wires on subbase; i.e., wires connected to terminal "1" should be marked "1." Disconnect wires as they are marked.
4. Remove old subbase.
5. Mount Q7800A Subbase.
6. Connect wires to subbase per attached cross reference. Pay close attention to footnotes. For example: to convert a Fireye UVM-2 to a RM7895, the wire marked "A" would connect to terminal #9 on the Q7800. The wire marked "8" would connect to Q7800 terminal #8.
7. A superscript letter, such as "a" designates a footnote. Study these footnotes carefully.
8. Plug in the RM7895. Make sure you select the proper ST7800A Purge Timer and Detector for the application.
9. There are 2 wires on the amplifier section of the RM7895, which are used to select the desired trial for ignition timing and mode (lock-out or recycle). Refer to the RM7895 instruction sheet (form 66-1090) for assistance with proper selection.
10. If a low voltage controller is used on the RA890 or UVM-1, remove it and replace it with a line voltage controller. The line voltage controller should be connected in series with the limits.
11. If a low voltage airflow switch is used on the RM7895, it must be replaced with a line voltage airflow switch.
12. The following models are recommended for replacements:

Honeywell Device to be Replaced	Replace With	Amplifier
RA890E, F	RM7895A	R7847A
RA890G	RM7895A	R7849A
R4795A, D/W-R7290 AMP	RM7895A	
R4795A, D/W-R7289 AMP	RM7895B	R7847A
R7795A	RM7895A	R7849
R7795B	RM7895A	R7847
R7795C	RM7895C	R7849
R7796D	RM7895C	R7847
R4140P	RM7895C	R7847A or R7849A
R4140Y	RM7895A	
Fireye Device to be Replaced	**Replace With**	**Amplifier**
TFM1, 2, 3H	RM7895A	R7847A
UVM1, 2, 3, 3H		R7849A
UVM5	RM7895C	R7849A

CONVERSION CHART FOR RM7895 120 VOLT ONLY

Q7800 TERMINAL	L1	L2	3	4	6	7	8	9	10	21	F	G
Programmer to be Converted												
RA890 (All)	1[a]	2	[c]	[b, d]	6	[b]	3[d]	5	4	—	F	G
R4795 (All)	[a]	2	[c]	8, 7	1	6[b]	3	5	4	—	F	G
R7795A, B	L1	L2	9	8	16	3	5	6	18	—	F	G
R7795C, D	L1	L2	9	8	16	3	5	6	18	7	F	G
R4140P	L1	L2	A	M	3	P	5	7	—	6	S1	S2
R4140Y	L1	L2	9	8	4	3	6	7	5	—	F[e]	G
Fireye: UVM/TFM (All models)/MII	1	1	A	8	7	6	3	5	4	—	S2[f]	S1
UVM-1 (Prior to 1968)	[a]	2	A	[b, d]	1	[b]	3	5	4	—	S[f]	S
UVM-2 (Prior to 1968), All others	[a]	2	A	8	1	6	3	5	4	—	S[f]	S

[a] Connect power to terminal L1.
[b] If no airflow switch is used, jumper Q7800 terminal 6 to 7.
[c] Replace low voltage alarm (if used) with line voltage alarm. Connect alarm directly to Q7800 terminal 3.
[d] On power burners, identify burner motor wire on terminal 3 and connect it to Q7800 terminal 4.
[e] Select amplifier to match detector being used.
[f] On UVM models, the detector must be changed to a Honeywell C7027 or C7035.

RA890F Protectorelay™ Primary Control

Primary control provides solid state, electronic flame safeguard protection for industrial and commercial single or dual fuel burners for rectification type flame detection.

- Uses rectification principle of electronic flame detection.
- Replaces RA890E in most applications and mounts on same Q270A1024 Subbase.
- Recycles if flame signal lost while in Run. Failure to establish pilot results in a lockout.
- Safe-start check prevents start-up if flame-simulating failure occurs in flame detector circuit.
- Includes built-in protection against ignition crossover in flame rod systems.
- Includes SPDT alarm contacts.
- Solid state circuitry.
- Mounts and removes easily through use of captive mounting screws.
- Mounting base is made of strong thermoplastic.

Application: Primary control for rectification application (Flame Rod for example)
Frequency: 50 Hz; 60 Hz
Temperature Range: 60 Hz models -20°F to +115°F, 50 Hz models -20°F to +105°F (50 Hz Models -29°C to +41°C, 60 Hz Models -29°C to +46°C)
Approximate, Dimensions: 5 in. high x 5 in. wide x 4 3/4 in. deep (including subbase) (127 mm high x 127 mm wide x 121 mm deep (including subbase))
Approvals, Underwriters Laboratories Inc.: UL Listed: 120V models only; File No. MP268, Guide No. MCCZ
Approvals, CSA: CSA Certified: 120V models only; File No. LR1620
Approvals, Factory Mutual: Approved: Report No. 17678, 19417, 19784

Material Number	Voltage	Flame Failure Response Time (sec)	Alarm Relay Switching	Safety Switch Timing	Description
RA890F1270/U	120 Vac	0.8 sec	SPDT	15 seconds	Rectification, with alarm contacts
RA890F1288/U	120 Vac	3.0 sec	SPDT	15 seconds	Rectification, with alarm contacts
RA890F1296/U	208 Vac	3.0 sec	SPDT	15 seconds	Rectification, with alarm contacts
RA890F1304/U	220 Vac	0.8 sec	SPDT	15 seconds	Rectification, with alarm contacts
RA890F1338/U	120 Vac	0.8 sec	SPDT	30 seconds	Rectification, with alarm contacts
RA890F1346/U	120 Vac	3.0 sec	SPDT	30 seconds	Rectification, with alarm contacts
RA890F1387/U	240 Vac	3.0 sec	SPDT	15 seconds	Rectification, with alarm contacts
RA890F1478/U	120 Vac	0.8 sec	SPDT	15 seconds	Rectification, with alarm contacts, fast safe start check.

RA890G Protectorelay™ Primary Control

Primary control provides solid state, electronic flame safeguard protection for industrial and commercial single or dual fuel burners applications using Ultraviolet flame detectors.

- Design for interrupted ignition with intermittent pilot on gas burners, and interrupted or intermittent ignition on oil burners.
- Use with a C7027, C7035 or C7044 Minipeeper Ultraviolet Flame Detector for flame sensing.
- Recycles if flame signal lost while in Run. Failure to establish pilot results in a lockout.
- Safe-start check prevents start-up if flame-simulating failure occurs in flame detector circuit.
- Includes SPDT alarm contacts.
- Solid state circuitry, eliminates warm-up and increases resistance to vibration.
- Mounts and removes easily through use of captive mounting screws.
- Mounting base is made of strong thermoplastic.

Application: Either a line or low voltage controller can be used
Frequency: 50 Hz; 60 Hz
Temperature Range: 60 Hz models -20°F to +115°F, 50 Hz models -20°F to +105°F (50 Hz Models -29°C to +41°C, 60 Hz Models -29°C to +46°C)
Approximate, Dimensions: 5 in. high x 5 in. wide x 4 3/4 in. deep (including subbase) (127 mm high x 127 mm wide x 121 mm deep (including subbase))
Approvals, Underwriters Laboratories Inc.: UL Listed: 120V models only; File No. MP268, Guide No. MCCZ
Approvals, CSA: CSA Certified: 120V models only; File No. LR9S329
Approvals, Factory Mutual: Approved: Report No. 22013

Material Number	Voltage	Flame Failure Response Time (sec)	Alarm Relay Switching	Safety Switch Timing	Description
RA890G1229/U	120 Vac	0.8 sec	SPDT	15 seconds	Ultraviolet, with alarm contacts
RA890G1245/U	220 Vac	0.8 sec	SPDT	15 seconds	Ultraviolet, with alarm contacts
RA890G1260/U	120 Vac	3.0 sec	SPDT	15 seconds	Ultraviolet, with alarm contacts
RA890G1286/U	240 Vac	3.0 sec	SPDT	15 seconds	Ultraviolet, with alarm contacts

Q270 Wiring Mount Base

Application: Wiring Mounting Base for RA890, R4795

Material Number	Description	Used With
Q270A1024/U	Wiring Mounting Base for RA890, R4795	RA890, R4795

A7800 Tester

Provides quick operational check of the 7800 SERIES System components.

- Allows testing different 7800 SERIES devices using configuration plugs and functional switches to simulate interlocks and control functions.
- Indicator lamps represent outputs as activated.

Application: Tester
Voltage: 120 Vac
Frequency: 50 Hz; 60 Hz
Temperature Range: -30°F to +150°F (-34.5°C to +65°C)

Material Number	Required Components	Includes	Used With
A7800A1010/U	Configuration Plugs, Included	Configuration Plugs	7800 SERIES Relay Modules with Valve Proving System or New Optical Detector Amplifiers

A7800 and DSP2672 Replacement Parts

Material Number	Application	Used With	Comments
203579A/U	Tester; DSP2672 RM7800/40/45 (non VPS side) Configuration Plug	RM7800; RM7840	Configures A7800 and DSP2672
203579B/U	Tester; DSP2672 RM7838A Configuration Plug		Configures A7800 and DSP2672
203579C/U	Tester; DSP2672 RM7838B, C Configuration Plug		Configures A7800 and DSP2672
203579D/U	Tester; DSP2672 RM7885A Configuration Plug		Configures A7800 and DSP2672
203579E/U	Tester; DSP2672 RM7890 (non VPS models) Configuration Plug		Configures A7800 and DSP2672
203579F/U	Tester; DSP2672 RM7895, 96, 97, 98 (non VPS side) Configuration Plug		Configures A7800 and DSP2672
203579G/U	Tester; DSP2672 RM7823 Configuration Plug		Configures A7800 and DSP2672
203579H	Tester; DSP2672 RM7865 Configuration Plug		Configures A7800 and DSP2672
203579J/U	Tester; DSP2672 RM7838B, C (VPS) Configuration Plug	A7800A1010 Tester	Configures A7800 and DSP2672
203579K/U	Tester; DSP2672 RM7890 (VPS) Configuration Plug	A7800A1010 Tester	
203579L/U	Tester; DSP2672 RM7800/40G,L (VPS side) Configuration Plug	A7800A1010 Tester	
203579M/U	Tester; DSP2672 RM7898 (VPS Side) Configuration Plug	A7800A1010 Tester	

Demonstrators or Trainers

DSP3452

DSP3956

DSP3981

DSP3564U

The DSP3452 is designed for training and demonstration of Honeywell Burner and Boiler Controls with auxiliary devices that are typically used with commercial and industrial burners. It demonstrates the wiring and operation of primary safety controls.

- The trainer can be used with Honeywell primary controls or programming controls (not included with the trainer).
- The nine trouble switches simulate a range of faults from a burned out pilot valve to a faulty flame detector to an inoperative firing rate motor.
- The trainer measures 20 1/2 in. x 32 in. x 12 1/2 in. It weighs approximately 30 lbs.

Color: Black

Material Number	Application	Voltage	Frequency	Approximate, Dimensions	Required Components	Includes	Used With	Comments
DSP3452/U	Primaries, Programmers or 7800 Series Trainer	120 Vac	50 Hz; 60 Hz	20 1/2 in. x 32 in. x 12 1/2 in.	Devices for wiring and training	jumper wires, propane gas hose with regulator, detector mounting adapters	Primaries, Programmers and 7800 SERIES Relay Modules	Complete Flame Safeguard Training Package
DSP3564/U	ControlLink FAR Trainer/Demonstrator	120 Vac	50 Hz; 60 Hz			Relay Module, R7999 Control and 3 ML Motors; Relay Module, R7999 Control and 4 ML Motors	ControLinks Fuel Air Ratio controls	
DSP3956/U	ControLink FAR Configuration Toolkit					ZM Software; USB-485 Converter with cable and Connector for Controlinks	ControLinks Fuel Air Ratio controls	
DSP3981/U	For Controlinks Configuration and Monitoring	120 Vac	50 Hz; 60 Hz				ControLinks Fuel Air Ratio controls	With S7999D Touchscreen for FAR Monitoring or Programming

SOLA Demonstrators

The DSP3943 is used as a SOLA commissioning or monitoring tool when a System or Local Operator Interface is not required for operation. The DSP contains the S7999B1026 touchscreen display which uses a wizardlike process to assist you through the commissioning process.

The DSP3980 contains an S7999D1006 Touchscreen Display to commission or monitor the SOLA system when a System or Local Operator Interface is not required for operation. The DSP3980 includes the power supply for operation and cable with connector for the SOLA system. A USB storage drive is provided to save display screen snapshots or trending information.

Voltage: 120 Vac
Color: Black

Material Number	Application	Frequency	Includes	Used With	Comments
DSP3943/U	Demonstrator, SOLA	60 Hz	S7910A1001 SOLA HC; S7999 Touchscreen Display; S7910 Keyboard display, system switches and ports		
DSP3980/U	Demonstrator	50 Hz; 60 Hz		SOLA Controls	Touchscreen for R7910/R7911 SOLA Monitoring or Programming

Flame Simulator

Flame simulators simplify the troubleshooting of flame safeguard controls by providing a quick method to check the flame detection function.

Material Number	Application	Color	Comments	Used With
123514A/U	Flame Simulator, Rectification Flame Amplifiers	Brown	Applications with test jack in G circuit	R4075B; R4181A; R4138A, B; R7253A; R8169B; R7257A; R7247A; R7847A
203659/U	Simulates C7027, C7035, C7044 Flame Simulators for 7800 SERIES	Purple	Simulates Minipeeper Flame Detectors	7800 SERIES Relay modules

FSP1535 Tester

Provides quick operational check of Honeywell RA890 or R4795 nonprogramming primary controls.

- Includes indicator lights that visually represent functions of ignition, pilot and main valve as unit simulates system operation.
- Eliminates need to operate entire system.
- Tests units with rated voltage from 100 to 240, 50/60 Hz by connecting line cord to the rated voltage.

Voltage: 120 Vacor 240 Vac
Frequency: 50 Hz; 60 Hz

Material Number	Application	Used With
FSP1535/U	Tester	RA890; R4795

FSP5004 Tester

A Tester that provides quick operational check of most Honeywell BC7000, R4140, R7140 and R4150 programmers and R7795 primary controls (order 198355A adapter separately).

- Includes indicator lights that visually represent control functions of programmer as unit simulates system operation.
- Works with 120 Vac, 60 Hz controls.
- Use to test some Gordon-Piatt programmers.
- Cannot be used to test some R4140 and R4150 models due to design or wiring differences. Reference the list at right to see if you have one of the controls that CANNOT be tested. If you do, check these out using the instructions provided in their respective instruction manuals.
- R4150/R4140/BC7000/R7795/R7140 Tester (120V only). Provides a quick operational check.

Voltage: 120 Vac
Frequency: 50 Hz; 60 Hz

Material Number	Application	Comments	Used With
FSP5004/U	Tester	DO NOT USE WITH: BC7000L1018, BC7000L1034, BC7000L1063; R4140D1004, R4140E1001, R4140M1079, or non-120 Vac R4140 models	BC7000; R4140; R7795; R7140

P531; P532 3-channel, Signal Processors

The P532/P531 supports three separate viewing heads, two S55XBE and one S70X. Independent 2 x SPDT Flame On relay contacts are provided for each viewing head (6 total). 0-20 or 4-20mA scalable analog output also provided for each viewing head. SIL 3 capable.

- 3 channels.
- Two SPDT flame relay outputs, one SPDT self-check relay output and one N.O. alarm relay output per channel.
- FM and CSA approved.
- Monitor the UV and IR flame component simultaneously or separately when using the S550B/BE.
- Monitor 3 viewing heads simultaneously.
- Independent configuration for each viewing head.
- 2 sets of configuration data per viewing head.
- Viewing head temperature indication.
- Automatic set-up functionality.
- Automatic viewing head detection.
- Modbus and RS422 protocol compatible.
- NEMA 1 Enclosure Rated.

Output: 4-20mA
Communications: ModBus and RS422 Compatible
Mounting: Cabinet mounting tabs
Connection Type: Removable terminals
Dimensions: 4.3 in. wide x 5.8 in. deep x 5.5 in. high (109 mm wide x 147 mm deep x 117 mm high)
Approvals, CSA: Approved (Temperature Range -40 to 158°F; -40 to 70°C)
Approvals, Factory Mutual: Approved (Temperature Range -40 to 158°F; -40 to 70°C)
Used With: S550BE, S552BE, S556BE, S70X, S80X viewing heads

Material Number	Description	Application	Keypad	Status Monitoring	Electrical Ratings	Frequency	Required Components
P531AC	AC Signal Processor	Signal Processor with 3 channels without keypad	Use KP532U keypad	LEDs	85-264 Vac + 24 Vdc backup	50 Hz; 60 Hz	Appropriate Flame Detector
P531DC	DC Signal Processor	Signal Processor with 3 channels without keypad	Use KP532U keypad	LEDs	22-26 Vdc+ 24 Vdc backup		Appropriate Flame Detector
P532AC	AC Signal Processor	Signal Processor with 3 channels and keypad	Integrated	tri-color display	85-264 Vac + 24 Vdc backup	50 Hz; 60 Hz	Appropriate Flame Detector
P532DC	DC Signal Processor	Signal Processor with 3 channels and keypad	Integrated	tri-color display	22-26 Vdc+ 24 Vdc backup		Appropriate Flame Detector
P532UI	Program module/keypad used with the P531	Program module/keypad used with the P531					

600U Flame Rod Signal Processor

Model 600 Ultra Flame Rod is a reliable Flame Detecting system based on the proven principle of measuring rectified current flow through a flame rod when a flame touches it. The Model 600 Flame Detector measures the rectified current and closes the flame relay if the current exceeds the value for the flame-on set-point.

Output: 175 Vac for flame rod
Mounting: DIN rail, 35mm
Connection Type: Removable terminals
Dimensions: 2-63/64 in. wide x 3-1/4 in. deep x 5-31/64 in. high (76 mm wide x 83 mm deep x 139 mm high)
Used With: Flame Rod

Material Number	Description	Application	Keypad	Status Monitoring	Electrical Ratings	Frequency
600U	Flame rod signal processor with DPDT flame relay contacts, DPST ignition transformer relay or ignition coil drive	Flame rod signal processor	Integrated	LEDs	85 to 132Vac or 170 to 264Vac	50 Hz; 60 Hz

P522 Signal Processor with 2 Channels and Keypad

The P522 supports two switched (not simultaneously) S55XBE viewing heads. 2 x SPDT Flame On relay contacts and 0-20 or 4-20mA scalable analog output is also provided. SIL 3 capable.

- 2 channels.
- Integrated keypad.
- Two SPDT flame relay outputs and one SPDT self-check relay output.
- FM and CSA approved.
- Flame failure response and time delay on set-up.
- Connect 2 viewing heads, monitoring 1 at a time.
- Independent configuration for each viewing head.
- 2 sets of configuration data per viewing head.
- Viewing head temperature indication.
- Modbus and RS422 protocol compatible.
- NEMA 1 Enclosure Rating.

Application: Signal Processor with 2 channels and keypad
Keypad: Integrated
Status Monitoring: LEDs
Output: 4-20mA
Communications: ModBus and RS422 Compatible
Mounting: Cabinet mounting tabs
Connection Type: Removable terminals

Dimensions: 4.3 in. wide x 6.4 in. deep x 6.7 in. high (109 mm wide x 162 mm deep x 170 mm high)
Approvals, CSA: Approved
Approvals, Factory Mutual: Approved (Temperature Range -32 to +122°F; 0 to +50°C)

Material Number	Description	Electrical Ratings	Frequency	Used With	Required Components
P522AC	AC Signal Processor	85-264 Vac + 24 Vdc backup	50 Hz; 60 Hz	S550B/BE, S552B/BE, S556B/BE viewing heads	Appropriate Flame Detector
P522DC	DC Signal Processor	22-26 Vdc+ 24 Vdc backup		S550B/BE, S552B/BE, S556B/BE viewing heads	Appropriate Flame Detector

WATCHDOGIII Flare Stack Signal Processor

The P222 is used with S256 viewing head for remote monitoring of flare flame. 2 x SPDT Flame On relay contacts for T1 timer and 1 x SPDT for T2 timer. 0-20 or 4-20mA scalable analog output is also provided. Two timers are included for flame delay off settings one 0 to 60 seconds (T1) and one 0 to 3600 seconds (T2).

Application: Flare Stack signal processor with 1 channel and keypad
Keypad: Integrated
Status Monitoring: LEDs
Output: 0/4-20mA
Communications: ModBus and RS422 Compatible
Mounting: Cabinet mounting tabs
Connection Type: Removable terminals

Dimensions: 4.3 in. wide x 6.4 in. deep x 6.7 in. high (109 mm wide x 162 mm deep x 170 mm high)
Approvals, QPS: Approved

Material Number	Description	Electrical Ratings	Frequency	Used With	Required Components
P222	Watchdog Signal Processor	85-264 Vac + 24 VDC backup	50 Hz; 60 Hz	S256 WATCHDOGIII flare stack viewing head	Appropriate Flame Detector
WATCHDOGIII	Kit consisting of P222 processor, S256B Viewing Head, 10-ft. C328 cable, quick disconnect plug.	85-264 Vac	50 Hz; 60 Hz		

S256B Flare Stack Viewing Head

S256B is a UV flare stack viewing head/flame detector, that detects the presence or absence of flame at the flare stack tip. Used for continuous UV flare stack monitoring to ensure no unburned toxic or waste gas releases into the atmosphere.

- Not adversely affected by Gamma Rays or X-Rays.
- Solar blind.
- Ground mounted, up to 1000 feet away from flare stack tip.
- UV gain selection of 0-99.
- Digital display.
- Quick disconnect plug.
- Easy to install with no plant shutdown.
- NEMA 4X / IP67 enclosure rating.
- Ambient temperature: -40°F to +140°F (-40°C to +70°C).
- 22-26 VDC supplied by signal processor.
- Used with P222 signal processor.

Application: Flame Detector for use with P222 processor
NEMA Rating: 4X
Electrical Connections: Quick disconnect plug
Mounting: 2" Pipe mount
Electrical Ratings: 22 to 26Vdc from signal processor
Dimensions: 3.7 in. wide x 20.3 in. deep x 13.7 in. high (94 mm wide x 516 mm deep x 348 mm deep)

Ambient Temperature Range: -40 to 140°F (-40 to 60°C)
Approvals, QPS: QPS to CSA 22.2
Environmental, Electrical, or Ingress Protection Rating: IP67
Comments: One color monitoring
Used With: P222 Processor

Material Number	UV Gain Adjustment	IR Gain Adjustment	Digital Displays	Description
S256B	0-99		Yes (1)	UV viewing head for use with P222

700 Signal Processor with 1 Channel

The 700 supports one UV or IR viewing head model S70X or S80X. 2 x SPDT Flame On relay contacts and 0-20 or 4-20mA scalable analog output is also provided. SIL 3 capable.

- 1 channel.
- Two SPDT flame relay outputs and one SPDT self-check relay output.
- FM and CSA approved.
- Status LEDs.
- DIN rail mounting.
- Modbus and RS422 protocol compatible.
- NEMA 1 Enclosure Rating.

Application: Signal processor with 1 channel and keypad
Status Monitoring: LEDs
Output: 4-20mA
Communications: ModBus and RS422 Compatible
Mounting: DIN rail
Connection Type: Removable terminals

Dimensions: 2.9 in. wide x 3.3 in. deep x 5.5 in. high (74 mm wide x 84 mm deep x 140 mm high)
Approvals, CSA: Approved
Approvals, Factory Mutual: Approved (Temperature Range 32 to 140°F; 0 to 60°C)

Material Number	Description	Keypad	Electrical Ratings	Frequency	Used With	Required Components
700ACSP	AC Signal Processor	Integrated	85-264 Vac	50 Hz; 60 Hz	All models of S702, S706, S802, S806 viewing heads	Appropriate Flame Detector
700DCSP	DC Signal Processor	Integrated	22-26 Vdc		All models of S702, S706, S802, S806 viewing heads	Appropriate Flame Detector

All-in-One Viewing Head and Processor

U2-101x and U2-101x PF are integrated viewing head and processor (All in One) with integral touch screen for operator interface. One Normally Open Flame relay contact and one Normally Open Fault relay contact is provided for interlock. 0-20 or 4-20 mA scalable analog output is also provided. Power input is 24 VDC @120 mA. Temperature sensor is included that provides display in degree F and C. System is self checking (no mechanical shutter) fit for use in SIL3 application. Approvals include (IP66), Class I Div 1 (IEC Ex d-ATEX Zone 1) for PF version and Class I, Div 2 (IEC Ex nA) for quick disconnect type models. For remote monitoring and configuration, FLAMETOOL –HMI (support 32 loops) or FLAMETOOL-PC (Supports 248 loops) is available. Available models are UVtron only (clean gases), IR only (oil and coal), UVtron plus IR (for all fuels- all applications including SRU, Kiln etc.). (UVSS is currently disabled).

Application: Combination DC signal processor and dual UV/IR Viewing head
Keypad: Integrated
Electrical Ratings: 22-26 Vdc
Output: 4-20mA
Communications: ModBus and RS422 Compatible
Dimensions: 4.3 in. wide x 5.8 in. deep x 5.5 in. high (109 mm wide x 147 mm deep x 117 mm high)

Approvals, CSA: Approved (Temperature Range -40 to 158°F; -40 to 70°C)
Approvals, Factory Mutual: Approved (Temperature Range -40 to 158°F; -40 to 70°C)
Approvals, Others: SIL3 (Temperature Range -40 to 158°F; -40 to 70°C)

Material Number	Description	Status Monitoring	Mounting	Connection Type	Used With	Required Components
Combination DC signal processor and dual UV/IR Viewing head						
U2-1010	Combination DC signal processor and dual UV/IR Viewing head.	LED for each sensor, flame relay, and self check.	1" NPT process connection	12 pin connector		Cable and connector, PT adapter and purge air coupler sold separately.
U2-1010-PF	Combination DC signal processor and dual UV/IR Viewing head with 10-ft pigtail.	LED for each sensor, flame relay, and self check.	1" NPT process connection	pigtail, 10-ft (3m)		PT adapter and purge air coupler sold separately.
U2-1010-PF-050	Combination DC signal processor and dual UV/IR Viewing head with 50-ft (15m) pigtail.	LED for each sensor, flame relay, and self check.	1" NPT process connection	pigtail, 50-ft (15m)		PT adapter and purge air coupler sold separately.
U2-1010-PF-100	Combination DC signal processor and dual UV/IR Viewing head with 100-ft (30m) pigtail.	LED for each sensor, flame relay, and self check.	1" NPT process connection	pigtail, 100-ft (30m)		PT adapter and purge air coupler sold separately.
U2-1018-PF	Combination DC signal processor and dual UV/IR Viewing head with 10-ft pigtail. Pipe fitting connection.	LED for each sensor, flame relay, and self check.	1" NPT process connection	pigtail, 10-ft (3m)		PT adapter and purge air coupler sold separately.
Combination DC signal processor and IR Viewing head						
U2-1012	Combination DC signal processor and IR Viewing head.	LED for each sensor, flame relay, and self check.	1" NPT process connection	12 pin connector		Cable and connector, PT adapter and purge air coupler sold separately.
U2-1012-PF	Combination DC signal processor and IR Viewing head with 10-ft pigtail. Pipe fitting connection.	LED for each sensor, flame relay, and self check.	1" NPT process connection	pigtail, 10-ft (3m)		PT adapter and purge air coupler sold separately.
Combination DC signal processor and UV Viewing head						
U2-1016	Combination DC signal processor and UV Viewing head.	LED for each sensor, flame relay, and self check.	1" NPT process connection	12 pin connector		Cable and connector, PT adapter and purge air coupler sold separately.
U2-1016-PF	Combination DC signal processor and UV Viewing head with 10-ft pigtail. Pipe fitting connection.	LED for each sensor, flame relay, and self check.	1" NPT process connection	pigtail, 10-ft (3m)		PT adapter and purge air coupler sold separately.

ISO UNIT

Material Number	Application	Description	Used With	
ISO-OR	Replacement O-ring	Replacement O-ring for ISO-UNIT and ISO-UNITSS	ISO-UNIT and ISO-UNITSS	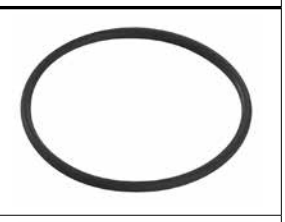
ISO-QW	Replacement quartz window	Replacement quartz window for ISO-Unit and ISO-UnitSS	ISO-UNIT and ISO-UNITSS	
ISO-RR	Replacement retainer ring	Replacement retainer ring for ISO-UNIT	ISO-UNIT	
ISO-RRSS	Replacement retainer ring	Replacement retainer ring for ISO-UNITSS	ISO-UNITSS	
ISO-UNIT	Sealing union with quartz window	1 in. NPTF sealing union with quartz window and 1/2 in. NPTF purge port.		
ISO-UNITHPGT	Sealing Union - Stainless Steel 1" NPTF w/1/2" purge port	Sealing Union - Stainless Steel 1" NPTF w/1/2" purge port		
ISO-UNITSS	Sealing union with quartz window	1 in. NPTF stainless steel sealing union with quartz window and 1/2 in. NPTF purge port.		

Flame Tool

Material Number	Application	Description	Used With	Comments
FLAMETOOLS-HMI/U	For all series 700, 500 and U2	Remote programming and logging using touchscreen system. Uses Honeywell S7999 display	All 700, 500 and U2 family	Supports multiple loops
FLAMETOOLS-PC	For all series 700, 500 and U2	Remote programming and logging using user PC. Supports Windows 7 and 8, includes RS232 converter cable and manual	All 700, 500 and U2 family	Supports multiple loops

Industrial Flame Monitoring Accessories

Material Number	Application	Description	Used With	
700-1	Swivel Mount	Swivel Mount, 1" NPT to 1/2" NPT	S700 and S800 Viewing heads	
700-2	Swivel Mount	Swivel mount for S700 and S800 series viewing heads. Flanged connection to 1/2 in. NPTM connection.	S700 and S800 series viewing heads	
700-3	Swivel Mount	Swivel mount for S700 and S800 series viewing heads. 1/2 in. NPTF to 1/2 in. NPTM connection.	S700 and S800 series viewing heads	
700ACC	Model S700 viewing head cooling jacket	Model S700 viewing head cooling jacket. Use with vortex coolers.	Vortex coolers	
700CRLT	Liquid tight cable restraint	Liquid tight cable restraint for S700 and S800 series viewing heads. For S800 viewing head, purchase S800 adapter ring, part 800-ACC-RING, separately.	S700 and S800 series viewing heads. For S800 viewing head, purchase S800 adapter ring, part 800-ACC-RING, separately.	
700DA	Delrin adapter replacement	Delrin adapter replacement for S700 series viewing heads. 1/2 in. NPTF process and 1/4 in. NPTF purge connections.	S700 series viewing heads	
700DA-1	Delrin adapter replacement	Delrin adapter replacement for S700 series viewing heads. 1 in. NPTF process and 1/4 in. NPTF purge connections.	S700 series viewing heads	
700LTA	Liquid tight viewing head cable adapter	Liquid tight viewing head cable adapter for S700/S800 series viewing heads.	S700 and S800 series viewing heads	
700RAA	Model S700/S800 viewing head right angle adapter	Model S700/S800 viewing head right angle adapter. 1/2 in. NPTF to 1/2 in. NPTM connection.		
700UA	Ultem heat insulating adapter	Ultem heat insulating adapter for S700 series viewing heads. 1/2 in. NPTF process and 1/4 in. NPTF purge connections.	S700 series viewing heads	
800ACC	Model S800 viewing head cooling jacket	Model S800 viewing head cooling jacket. Use with vortex coolers.	Vortex coolers	
800ACC-RING	Adapter ring	Adapter ring to fit 800 viewing head to 700ACC cooling jacket and 700CRLT cable restraint.	800 viewing head to 700ACC cooling jacket and 700CRLT cable restraint	
800DA	Delrin adapter replacement	Delrin adapter replacement for S800 series viewing heads. 1/2 in. NPTF process and 1/4 in. NPTF purge connections.	S800 series viewing heads	
800UA	Ultem heat insulating adapter	Ultem heat insulating adapter for S800 series viewing heads. 1/2 in. NPTF process and 1/4 in. NPTF purge connections.	S800 series viewing heads	
ACC55XBE	Air cooling canister for Model S55XBE viewing heads	Air cooling canister for Model S55XBE viewing heads. 1/4 inch air inlet port. Use with vortex coolers.	Model S55XBE viewing heads; Vortex coolers	
ACC5XX	Air cooling canister for Model 5XX viewing heads	Air cooling canister for Model 5XX viewing heads. 1/4 inch air inlet port. Use with vortex coolers.	Model 5XX viewing heads; Vortex coolers	
ASY55XBE	Model S55xBE viewing head installation.	Cable Assembly, 50 foot C330S with overmolded S55xBE connector. Includes 50 foot 4 conductor cable with foil/braid shield and coupling nut tied to shield. Use with Model S55xBE Viewing Heads	Model S55xBE Viewing Heads	
ASY55XBE-50	Model S55xBE viewing head installation.	Cable Assembly, 50 foot C330S with overmolded S55xBE connector. Includes 50 foot 4 conductor cable with foil/braid shield and coupling nut tied to shield. Use with Model S55xBE Viewing Heads	Model S55xBE Viewing Heads	
ASY55XBE-100	Model S55xBE viewing head installation	Cable Assembly, 100 foot C330S with overmolded S55xBE connector. Includes 200 foot 4 conductor cable with foil/braid shield and coupling nut tied to shield. Use with Model S55xBE Viewing Heads	Model S55xBE Viewing Heads	

Material Number	Application	Description	Used With	
ASY55XBE-200	Model S55xBE viewing head installation.	Cable Assembly, 200 foot C330S with overmolded S55xBE connector. Includes 200 foot 4 conductor cable with foil/braid shield and coupling nut tied to shield. Use with Model S55xBE Viewing Heads	Model S55xBE Viewing Heads	
ASY55XBE-300	Model S55xBE viewing head installation	Cable Assembly, 300 foot C330S with overmolded S55xBE connector. Includes 300 foot 4 conductor cable with foil/braid shield and coupling nut tied to shield. Use with Model S55xBE Viewing Heads	Model S55xBE Viewing Heads	
ASY785	Model S70x/S80x viewing head installation.	Cable Assembly, 50 foot C330S with pre-wired S70x/S80x connector. Includes 50 foot 4 conductor, 22g cable with drain, foil/braid shield and connector housing tied to shield. Use with Model S70x/S80x Viewing Heads	Model S70x/S80x Viewing Heads	
ASY785-200	Model S70x/S80x viewing head installation.	Cable Assembly, 200 foot C330S with pre-wired S70x/S80x connector. Includes 50 foot 4 conductor, 22g cable with drain, foil/braid shield and connector housing tied to shield. Used with Model S70x/S80x Viewing Heads	Model S70x/S80x Viewing Heads	
ASY786	Model S70x/S80x viewing head installation.	Field Wireable Shielded Connector for S70x/S80x Viewing Heads. Used with Model S70x/S80x Viewing Heads	Model S70x/S80x Viewing Heads	
ASY964	15-ft cable with quick disconnect	15-ft cable (12 conductor) with quick disconnect for all U2 non-pipe fitting models.	U2-1010, U2-1012, U2-1016, U2-1018 models only.	
C12S	12 conductor cable with braided shield	12 conductor cable with braided shield for use with all U2 combination DC signal processor and viewing heads. Sold per foot.	U2-1010, U2-1012, U2-1016, U2-1018, U2-1010-pf, U2-1012-pf, U2-1016-pf, U2-1018-pf models only. Used with -pf models for cable extension.	
C330S	4 Conductor Cable with braided shield for S70x, S80x and S55xBE Viewing heads	4 Conductor Cable with braided shield for all Iris viewing heads	S55xBE, S70x/S80x viewing heads, P522, and P53x signal processors.	
M3204	Vortex air cooler, model 3204.	Vortex air cooler, model 3204 -4SCFM (113SLPM) for maximum refrigeration 275 BTU/HR (69 Kcal/hr)	All cooling jackets	
M3208	Vortex air cooler, model 3208.	Vortex air cooler, model 3208 -8SCFM (227 SLPM) for maximum refrigeration 550 BTU/HR (139 Kcal/hr)	All cooling jackets	
M3210	Vortex air cooler, model 3210.	Vortex air cooler, model 3210 -10 SCFM (283SLPM) for maximum refrigeration 650 BTU/HR (164 Kcal/hr)	All cooling jackets	
M4025	Vortex air cooler, model 4025.	Vortex air cooler, for cabinet model 4025 - maximum refrigeration 1700 BTU/HR (428 Kcal/hr)	For processor cabinet cooling	
M-701-1	Swivel Mount	Swivel mount, 2 in. pipe slip-on to 1 in. NPT connection.	All viewing heads- S70x with DA-1	
M-701-2	Swivel Mount	Swivel Mount, 2" NPT to 1" NPT	All viewing heads- S70X with DA-1	
M-701-2-FLG	Flanged swivel mount	Flanged swivel mount, 2 in. flanged to 1 in. NPTF.	All viewing heads- S70X with DA-1	
M-701-2-SS	Swivel Mount	Swivel mount, 2 in. NPT female to 1 in. NPT female, Stainless steel construction.	All viewing heads- S70X with DA-1	
M-701-3	Flanged swivel mount	Flanged swivel mount, 3-bolt, 4.5 in. flanged to 1 in. NPTF.	All viewing heads- S70X with DA-1	
M-701-3P	Swivel Mount	Swivel mount, 3 in. NPTF to 1 in. NPTF connection.	All viewing heads- S70X with DA-1	
M-701-4	Swivel Mount	Swivel mount, 2-bolt to 1 in. NPTF connection.	All viewing heads- S70X with DA-1	
M-702-6	Orifice and retaining ring set.	Orifice and retaining ring set. Used for all viewing heads.	Used for all viewing heads.	
PT-GA1	High temperature gasket for 1 in. locking coupler.	High temperature gasket for 1 in. locking coupler.	1 in. locking coupler	
PT-QL1	Quartz lens for 1 in. locking coupler.	Quartz lens for 1 in. locking coupler.	1 in. locking coupler	
R-518-08	Viewing Head S256 Quick Disconnect Plug	Viewing Head S256 Quick Disconnect Plug	WDIII S256 viewing head	

IFM Accessories

Material Number	Application	Description	Used With	
R-518-11	Model S55xBE viewing head installation.	S55xBE Field Wireable Cable with 6-8mm cable bushing for use with C330S cable. Includes Field wireable with proper bushing size to provide IP seal with C330S cable. No shield at connector, less robust version. Used with Model S55xBE Viewing Heads	Model S55xBE viewing head, and C330S cable.	
R-518-12	Heat Block-1" NPT	All viewing heads with 1" NPTF connection	All viewing heads with 1" NPTF connection	
R-518-13	Heat insulating nipple for S70X/S80X series viewing heads.	1/2 in. NPT Ultem heat insulating nipple for S70X/S80X series viewing heads.	S70X/S80X series viewing heads	
R-518-CL12-HTG	Locking coupler	1 in. NPT locking coupler with high temperature gasket. Must be used with R-518-PT12 or R-518-PT12L	All viewing head that has 1" NPTF	
R-518-CL12-PG	Locking quick disconnect/cam and groove coupler adapter	1 in. NPT aluminum locking quick disconnect/cam and groove coupler adapter with 1/2 in. NPT purge. Must be used with R-518-PT12 and R-518-PT12L	All viewing head that has 1" NPTF	
R-518-CL13-HTG	Locking coupler	1/2 in. NPT locking coupler with high temperature gasket. Must be used with R-518-PT13 or R-518-PT13L	All viewing heads that have 1/2" NPTF connection	
R-518-PT12	Insulating locking coupler adapter	1 in. NPT Ultem insulating locking coupler adapter. Used with U2 processor/viewing head.	1 in. NPT Ultem insulating locking coupler adapter use with R-518-CL12-HTG and R-518-CL12PG	
R-518-PT12L	Locking coupler adapter with quartz lens.	1 in. NPT Ultem locking coupler adapter with quartz lens.	1 in. NPT Ultem insulating locking coupler adapter with quartz lens for use with R-518-CL12-HTG and R-518-CL12PG	
R-518-PT13	Locking coupler adapter only.	1/2 in. NPT Ultem insulating locking coupler adapter use with R-518-CL13-HTG and R-518-CL13HTG		
R-518-PT13L	Locking coupler adapter with quartz lens.	1/2 in. NPT Ultem locking coupler adapter with quartz lens.		
UVSOURCE	Testing any UV based system	Ultraviolet light source battery operated	Test for any UV tube based system	

Fiberoptic System

Material Number	Application	Description	Used With	
FASA-GLASS	Glass fiber optics assembly for IR flame detection	Glass fiber optics complete assembly for IR flame detection with guide pipes and flex connection. Standard assembly length 5-feet. Standard 5-ft fiber optic cable. Use FASA-GLASS-FT to add additional fiber optic cable length and inner/outer assemblies		
FASA-GLASS-FT	Glass fiber optics assembly for IR flame detection	Glass fiber optics complete assembly per foot adder for FASA-GLASS, for IR flame detection. Includes fiber optic cable and inner/outer assemblies in 1-ft segments.	FASA-GLASS	
FASA-INT-GLASS	Glass fiber optics assembly for IR flame detection	Glass fiber optics inner tube assembly for IR flame detection with flex connector. No guide pipes. Standard assembly length 5-ft. Use FASA-INT-GLS-FT to add additional fiber optic cable length and inner assembly in 1-ft length		
FASA-INT-GLS-FT	Glass fiber optics assembly for IR flame detection	Glass fiber optics inner assembly per foot adder for FASA-INT-GLASS, for IR flame detection. Includes fiber optic cable and inner assembly in 1-ft increment.	FASA-INT-GLASS	
FASA-INT-QTZ-FT	Quartz fiber optics assembly for UV/IR flame detection	Quartz fiber optics inner tube assembly per foot adder for FASA-INT-QUARTZ, for UV/IR flame detection. Includes fiber optic cable and inner assembly in 1-ft segments.	FASA-INT-QUARTZ	
FASA-INT-QUARTZ	Quartz fiber optics assembly for UV/IR flame detection	Quartz fiber optics inner tube assembly for UV/IR flame detection with flex connector. No guide pipes. Standard assembly length 5-ft. Use FASA-INT-QTZ-FT to add for longer than 5'		
FASA-QUARTZ	Quartz fiber optics assembly for UV/IR flame detection	Quartz fiber optics complete assembly for UV/IR flame detection with guide pipes and flex connection. Standard assembly length 5. Use FASA-QUARTZ-FT for longer than 5' by 1' increment		
FASA-QUARTZ-FT	Quartz fiber optics assembly for UV/IR flame detection	Quartz fiber optics complete assembly per foot adder for FASA-QUARTZ, for UV/IR flame detection. Includes fiber optic cable and inner/outer assemblies in 1-ft increment	FASA-QUARTZ	
FLEX-HOSE	Hose for fiber optics assembly.	1/2 in. NPT x 36 in. long flex hose for fiber optics assembly.		
FOC-GLASS	5-ft Glass Fiber optic cable for IR viewing heads.	5-ft Glass Fiber optic cable, for IR viewing heads. Use FOC-GLASS-FT adder for each additional foot in length required.	IR viewing heads	
FOC-GLASS-FT	Glass fiber optic cable per foot adder for FOC-GLASS, for IR flame detection.	Glass fiber optic cable per foot adder for FOC-GLASS, for IR flame detection.	FOC-GLASS, for IR flame detection	
FOC-QUARTZ	5-ft Fiber optic cable, quartz bundle for UV/IR viewing heads with high temperature epoxy	5-ft Fiber optic cable, quartz bundle for UV/IR viewing heads with high temperature epoxy. Use FOC-QUARTZ-FT adder for each additional foot in length required.	FOC-QUARTZ-FT	
FOC-QUARTZ-FT	Quartz fiber optic cable for UV/IR flame detection	Quartz fiber optic cable per foot adder for FOC-QUARTZ, for UV/IR flame detection.	FOC-QUARTZ	
FOLC-9C	Fiber optic lens cartridge and coupler	Fiber optic lens cartridge and coupler - 9 degree viewing angle	FASA and FASA-INT	
FOLC-HS	Replacement fiber optic lens cartridge mounting hood/lens housing	Replacement fiber optic lens cartridge mounting hood/lens housing with 1/2 inch NPT connection.		

IFM Accessories

Material Number	Application	Description	Used With	
FOLC-SC	Fiber optic lens cartridge and coupler	Fiber optic lens cartridge and coupler - straight connection.		
S550FOAD	Fiber optics adapter viewing head side	Fiber optics adapter for S55XB/S55XBE viewing head and U2 models.	S55XB/S55XBE viewing heads, U2	
S550FOADY-FT	Fiber optics adapter	Fiber optics adapter with air purge connection for all viewing heads with 1" NPT connection	S55XB/S55XBE viewing heads, U2	
S550FOADY-FT-AL	Fiber optics adapter	Fiber optics adapter with air purge connection for all viewing heads with 1" NPT connection	S55XB/S55XBE viewing heads, U2	
S592-OR	Spare Parts for FOLC-SC and FOLC-9C	Metal O-Ring Spare Parts for FOLC-SC and FOLC-9C	FOLC-SC and FOLC-9C	
S592-PC	Spare Parts for FOLC-SC and FOLC-9C	Fiber assembly quartz lens (plano/convex) for FOLC-SC and FOLC-9C	FOLC-SC and FOLC-9C	
S592-PP	Spare Parts for FOLC-SC and FOLC-9C	Plano/Plano window For FOLC-SC and FOLC-9C	FOLC-SC and FOLC-9C	
S592-RR	Spare Parts for FOLC-SC and FOLC-9C	Retainer clip for FOLC-SC and FOLC-9C	FOLC-SC and FOLC-9C	
S700FOAD	Fiber optics adapter	Fiber optics adapter for S70X viewing heads.	Any 1/2" viewing head/ FASA	
S800FOAD	Fiber optics adapter	Fiber optics adapter for S80X viewing heads.	S80X viewing heads	

GHE Igniter System

The GHE High Energy Ignitor is a non fouling high energy device, designed to directly ignite all liquid and gaseous fuels. The GE High Tension Ignitor is designed to provide reliable ignition and or warm up when and where required. It can be applied to boiler applications from industrial to utility lime and cement kiln heaters, etc.

Material Number	Application	Description	Used With	Comments
GHE1-3	Gas high energy pilot igniter assembly used with gaseous fuels	Gas high energy pilot igniter assembly used with liquid and gaseous fuels, 1-3 MBH capacity, 1-7/8 inch OD with 36 inch SS flex hose, 36 inch SS air hose, burner mounting tube, high energy probe, igniter tip 12 in. long x 1/2 in OD.	Gaseous fuels	1-3 MMBTU/HR capacity, 1-7/8 inch OD with 36 inch SS flex hose, 36 inch SS air hose, burner mounting tube, high energy probe, igniter tip 12 in. long x 1/2 in OD. Standard assembly length 2-feet. Use IGADD for each 1-ft assembly length addition. Order Powerpack-12-CS, IGN-CPC-10 HT cable, IGN-CPC-ADD for longer than 10' cable and Power pack cabinet. Integral optical flame scanner option is available.
GHE2-5	Gas high energy pilot igniter assembly used with gaseous fuels	Gas high energy pilot igniter assembly used with liquid and gaseous fuels, 1-3 MBH capacity, 1-7/8 inch OD with 36 inch SS flex hose, 36 inch SS air hose, burner mounting tube, high energy probe, igniter tip 12 in. long x 1/2 in OD.	Gaseous fuels	2-5 MMBTU/HR capacity, 2-7/8 inch OD with 36 inch SS flex hose, 36 inch SS air hose, burner mounting tube, high energy probe, igniter tip 12 in. long x 1/2 in OD. Standard assembly length 2-feet. Use IGADD for each 1-ft assembly length addition. Order Powerpack-12-CS, IGN-CPC-10 HT cable, IGN-CPC-ADD for longer than 10' cable and Power pack cabinet. Integral optical flame scanner and quick disconnect options are available.
GT-LITE	Ignitor Spark tip / probe	Ignitor Spark tip / probe, 12 inch long x 1/2 inch OD.		12 inch long x 1/2 inch OD.
HEPADD	High energy probe	High energy probe per foot adder for lengths over 2-feet. Use to add length to IPASS, gas high energy replacement pilot igniter probe assembly, in 1-foot increments.	IPASS	Use to add length to IPASS, gas high energy replacement igniter probe assembly, in 1-foot increments.
HV-HT	Replacement internal GHE ignitor cable with contact	Replacement internal GHE ignitor cable with contact, 2-feet length standard. Internal cable from igniter tip to junction box. Use HV-HT-FT cable adder for each additional foot in length required.	GHE ignitor cable	Internal cable from igniter tip to junction box. Use HV-HT-FT cable adder for each additional foot in length required.
HV-HT-FT	Replacement internal GHE ignitor cable	Replacement internal GHE ignitor cable per foot adder for lengths over 2-feet. Use to add length to HV-HT in 1-foot increments.	GHE ignitor cable	Use to add length to HV-HT in 1-foot increments.
IGADD	Ignitor assembly per foot adder	Ignitor assembly per foot adder for igniter length over 2-ft. Use to add length to GHE1-3 or GHE2-5, gas high energy pilot igniter assembly in 1-foot increments.	Add length to GHE1-3 or GHE2-5, gas high energy pilot igniter assembly in 1-foot increments	Foot adder for igniter length over 2-ft
IGN-CPC-10	Ignitor cable 10 ft with canon plug	Ignitor cable 10 ft with canon plug for POWERPACK-12-CS. From power pack to igniter. To add length, use IGN-CPC-ADD.	POWERPACK-12-CS	From power pack to igniter. To add length, use IGN-CPC-ADD.
IGN-CPC-ADD	Cannon plug cable	Cannon plug cable adder for length over 10-ft. Per foot adder for IGN-CPC-10.	IGN-CPC-10.	For length over 10-ft
IGN-CPC-LB	Replacement ignitor probe junction box with canon plug receptacle	Replacement ignitor probe junction box with canon plug receptacle for GHE ignitors.	GHE ignitors	
IPASS	GHE pilot igniter probe assembly without burner mounting tube, flange, gas insert or air/gas flex hoses.	GHE pilot igniter probe assembly includes igniter tip, junction box. Standard assembly is 2'. Use HEPADD for longer length. Order 12- Jule PowerPack,-12-CS and IGN-CPC-10/ IGN-CPC-ADD	Gaseous fuels	Includes high energy probe, igniter tip 12 in. long x 1/2 in OD and junction box with receptacle. Standard assembly length 2-feet. Use HEPADD for each 1-ft assembly length addition. Order 12-Joule POWERPACK-12-CS and associated cabling with canon plug
NEMA-12-ADD	NEMA 12 enclosure for igniter powerpack.	NEMA 12 enclosure for igniter powerpack.	Igniter powerpack	

IFM Accessories

Material Number	Application	Description	Used With	Comments
NEMA-4-ADD	NEMA 4 enclosure for igniter powerpack.	NEMA 4 enclosure for igniter powerpack.	Igniter powerpack	
NEMA-4X-ADD	NEMA 4X enclosure for igniter powerpack.	NEMA 4X enclosure for igniter powerpack.	Igniter powerpack	
POWERPACK-12-CS	Ignitor 12 Joule Power pack for GHE and IPASS	Ignitor 12 Joule Power Pack	GHE and IPASS	120V/220V/50-60Hz, output energy 2,500Vdc, 12 Joule pulses @ 6 sparks/second.
QDADD	Quick disconnect/cam and groove coupler	Add quick disconnect/cam and groove coupler on GHE2-5 in place of the standard flange connection to the burner mounting tube.	GHE2-5	

700 and 800 System

Available in single sensor only, UVTron or IR. Options include quick disconnect with two LEDs or factory installed cable.

Application: Flame Detector for Oil Fired burners
Mounting: 1/2" NPTF or 1" NPTF with 1/4" NPT Purge connection
Electrical Ratings: 22 to 26Vdc from signal processor
Sight Pipe (NPT): 1/2 in.
Purge Air Pipe (NPT): 1/4 in.
Ambient Temperature Range: -40 to 149°F (-40 to 65°C)

Approvals, CSA: Approved CSA, FM IEC, SIL3 (Temp rating -40 to 149°F/-40 to 65°C)
Approvals, Factory Mutual: Approved
Environmental, Electrical, or Ingress Protection Rating: IP64
Required Components: Order ASY785 (50foot) or ASY785-200 (200ft) for molded, shielded cable assemblies. ASY785 or ASY785-200 are recommended for new installations.

Material Number	Type	Electrical Connections	Shutter	UV Gain Adjustment	IR Gain Adjustment	Dimensions	Comments	Used With
S702	IR Compact viewing head with 15-foot cable	Quick disconnect plug	Electronic		1-9	2.0 in. wide x 9.7 in. deep x 2.0 in. high (51 mm wide x 246 mm deep x 51 mm high)	Removable connector cover for diagnostic LED viewing during installation.	Use with 700 AC SP or 700DC SP
S702PF	IR Compact viewing head with 10-foot cable	Quick disconnect plug	Electronic		1-9	2.0 in. wide x 9.7 in. deep x 2.0 in. high (51 mm wide x 246 mm deep x 51 mm high)		
S706	UV Compact viewing head with 15-foot cable	Quick disconnect plug	Electronic	1-9		2.0 in. wide x 9.7 in. deep x 2.0 in. high (51 mm wide x 246 mm deep x 51 mm high)	Removable connector cover for diagnostic LED viewing during installation.	Use with 700 AC SP or 700DC SP
S706PF	UV Compact viewing head with 15-foot cable	Quick disconnect plug	Electronic	1-9		2.0 in. wide x 9.7 in. deep x 2.0 in. high (51 mm wide x 246 mm deep x 51 mm high)		Use with 700 AC SP or 700DC SP
S802	IR Compact viewing head with 15-foot cable	Quick disconnect plug	Electronic		1-9	1.8 in. wide x 9.2 in. deep x 1.8 in. high (46 mm wide x 234 mm deep x 46 mm high)	Removable connector cover for diagnostic LED viewing during installation.	Use with 700 AC SP or 700DC SP
S806	UV Compact viewing head with 15-foot cable	Quick disconnect plug	Electronic	1-9		1.8 in. wide x 9.2 in. deep x 1.8 in. high (46 mm wide x 234 mm deep x 46 mm high)	Removable connector cover for diagnostic LED viewing during installation.	Use with 700 AC SP or 700DC SP

S55xBE Viewing head

The S550BE is provided with UVTron and IR sensors. System is self checking, no mechanical shutters, not adversely affected by X or Gamma rays generated by pipe check welding. Suitable for all fuel flames, single or multiple fuels. Optional pipe fitting (PF) versions provided with factory installed cable. Suitable for hazardous location duty. SIL 3 capable.

- Not adversely affected by Gamma Rays or X-Rays.
- Mount in any orientation.
- IR gain selection of 0-699.
- UV gain selection of 0-99.
- 2 digital displays.
- Quick disconnect plug.
- Parameters stored in signal processor EEPROM.
- Ultraviolet and infrared with electronic shutter.
- Ambient Temperature: -40°F to +149°F (-40°C to +65°C)
- 22-26 VDC supplied by signal processor.
- CSA Rated IP64 Enclosure.
- Used with P532, P532, P531, P531, P522, P522 signal processors.

Application: Flame Detector for All fuels multiple burners
Mounting: 1" NPTF burner front with 1/2" purge connection
Electrical Ratings: 22 to 26Vdc from signal processor
Sight Pipe (NPT): 1 in.
Purge Air Pipe (NPT): 1/2 in.
Dimensions: 4.1 in. wide x 8.1 in. deep x 5.4 in. high (104 mm wide x 206 mm deep x 137 mm high)
Ambient Temperature Range: -40 to 158°F (-40 to 70°C)
Approvals, CSA: Approved CSA
Approvals, Others: SIL3 (Temp rating -40 to 149°F/ -40 to 65°C) IECEx IEC: Approved
Approvals, Factory Mutual: Approved
Environmental, Electrical, or Ingress Protection Rating: IP64
Used With: P522, P531 and P532 Processors

Material Number	Type	Electrical Connections	Shutter	UV Gain Adjustment	IR Gain Adjustment	Digital Displays	Comments	Required Components
Flame Detector for All fuels multiple burners								
S550BE		Quick disconnect plug	Electronic of IR only	0-99	0-699	Yes (2)	2 digit display for UV and IR	Use with molded cable ASY55XBE or ASY55XBE-200. P522 or P532 signal processor.
S550BE-PF	UV/IR Viewing Head	10 foot pigtail	Electronic of IR only	0-99	0-699	Yes (2)	2 digit display for UV and IR	Factory installed 10' cable. P522 or P532 signal processor.
Flame Detector for Gas multiple Burners								
S556BE	UV Viewing Head with Digital Display	Quick disconnect plug		0-99		Yes (1)	2 digit display for UV	Use with molded cable ASY55XBE or ASY55XBE-200. P522 or P532 signal processor.
S556BE-PF	UV Viewing Head with Digital Display	10 foot pigtail		0-99		Yes (1)	2 digit display for UV and IR	P522 or P532 signal processor.
Flame Detector for Oil and Coal multiple burners								
S552BE		Quick disconnect plug	Electronic		0-699	Yes (1)	2 digit display for IR	Use with molded cable ASY55XBE or ASY55XBE-200. P522 or P532 signal processor.
S552BE-PF	IR Viewing Head	10 foot pigtail	Electronic		0-699	Yes (1)	2 digit display for IR	P522 or P532 signal processor.

Video is a very effective medium to use for both technical training and product familiarization. Many of the programs described here are relatively short and make a nice addition to a service meeting or formal class on HVAC controls. These tapes have been widely used in a number of applications such as:

- *At the distributor's counter* – to help answer questions and show technicians how to use new products
- *At service meetings* – to review new service procedures at the beginning of a season
- *In the classroom* – to provide students with authoritative information direct from the manufacturer

Commercial HVAC Controls

In Control With Solid State		
This three-part DVD covers solid state economizer control systems, and features the H705A Enthalpy Controller, the M7415A Actuator, W7459 Economizer Logic Module, C7400 Air Sensor and C7150 Discharge Air Sensor. Separate parts cover Operation (12:00), Installation (15:00), and Checkout and Troubleshooting (8:00). 35:00	**VT34/U**	**$15.00**

Heating Controls

Training on Demand Heating Controls DVD		
Contains the following modules: Basic Hydronic Control 14:33, Hydronic Heating Distribution 12:39, Outdoor Temperature Compensation 16:22, Oil Burner Controls 14:37, Flame Detection 13:14, Standing Pilot 12:33, Intermittent Pilot 14:16, SmartValve System 10:57, Direct Burner Ignition 12:05, SmartValve Direct Burner Ignition 9:44, Advanced SmartValve 11:27, SmartValve Water Heater Control 11:26 (2004), and Universal Integrated Furnace Control 11:07 (2007)	**63-9357/U**	**$9.00**

Training Booklets

Training Booklets

Electronic Air Cleaner Application and Installation

Includes selection, application and installation information for residential and light commercial type electronic air cleaners. *31 pages*

70-9723/U **$1.10**

Electronic Air Cleaner Service Data

Includes replacement parts, model number identification, service tools and equipment, plus description, checkout and troubleshooting guide and parts list for Honeywell electronic air cleaners. *107 pages*

70-9724/U **$4.35**

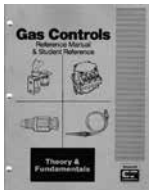

Gas Control Reference Manual & Student Reference – Theory and Fundamentals

Basic information and technical data on gas heating controls: gas properties, combustion, pilot burner systems, warm air heating systems, hydronic heating appliances, power sources, safety shutoff circuit and combination gas valves. Extensive glossary and technical charts. *48 pages, 1988*

Orderable in packs of 25 from: http://literature.honeywell.com/

71-97473 **$55.78**

Principles of Millivoltage Control

Theory, controls and control circuits for millivoltage for heating systems with performance specifications on thermopiles. *22 pages, 1989*

Orderable in packs of 25 from: http://literature.honeywell.com/

71-97280 **$23.38**

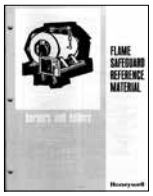

Burners and Boilers

Descriptions of various types of commercial and industrial gas, oil, and coal burners and their operation. Also boilers classified by construction and size. A comprehensive and understandable introduction to the subject. *65 pages*

Orderable in packs of 5 from: http://literature.honeywell.com/

70-8107 **$9.10**

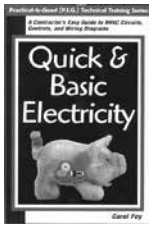

Quick and Basic Electricity

A contractor's beginning guide to HVAC circuits, controls and wiring diagrams. *80 pages*

71-97431/U **$20.00**

Really Basic Electricity

Written for the person with no background in electricity. Introduces basic concepts of a.c. and d.c. electricity. Includes pictures and diagrams. *96 pages*

71-97004/U **$7.00**

Training Booklets

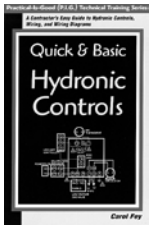

Quick and Basic Hydronic Controls

Another in the "Practical is Good" (P.I.G.) Technical Training Series. A contractor's easy guide to hydronic controls, wiring, and wiring diagrams. How figuring circuits is like watching a bug on a rope; why thinking in circles is good; how every hydronic control is a power supply, a switch, or a load; how limit controls are like a safety committee; how to see the friendly side of control panels. *87 pages, 2000*

71-97160/U **$20.00**

Quick and Basic Troubleshooting Book

This book tells you how to troubleshoot controls and control circuits using a meter, a "hopscotch," "Leapfrog," "daisy chain," and "homerun" methods, a troubleshooting chart, a wiring diagram and your common sense. *80 pages*

71-97931/U **$20.00**

Quick and Basic House Wiring

This book is an HVAC contractor's guide to what the electrician does. Ever wonder what's going on inside the walls? This book explains it, both modern and "the old stuff." It also explains such electricity puzzles as how to wire 3-way and 4-way switches, why 2-wire cable has 3 wires and why 3-wire cable has four.

71-97966/U **$20.00**

ControlPro Pneumatic Control Training Manual

This manual is for a two-day in-house course on Honeywell pneumatic controls. It is available separately for use in your own training. *150 pages*

Orderable in packs of 5 from: http://literature.honeywell.com/

71-97070 **$29.12**

Programmed Instruction Books

Fundamentals of Residential Control

A step-by-step, self-instruction workbook in a question and answer format. Students learn the necessary foundation for advanced study in controls while working at their own speed. Ideal for individual student use in preparation for other courses. Topics include: nature of electricity, rules governing electricity, inductive and capacitive circuits, principles of motor operation, power, transformer principles, relay principles, analyzing control circuits. *250 pages*

Orderable in packs of 25 from: http://literature.honeywell.com/

71-97083 **$258.41**

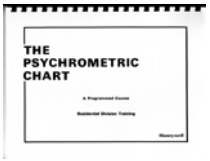

The Psychrometric Chart

A valuable tool for everyone in the HVAC industry. Knowledge of the complex relationship between the various characteristics of the air (temperature, humidity, moisture content, etc.) can be the key to solving a number of air conditioning problems. Text illustrates with examples of how to use psychrometric charts. Use it as a self-instruction text or a class exercise. *100 pages*

Orderable in packs of 25 from: http://literature.honeywell.com/

71-97444 **$111.63**

Service Publications

Service Handbooks

Honeywell Service Data Manual

Formerly known as the Service Handbook Library, these manuals have been completely updated and published in a new 8-1/2 x 11 in. format to make even more service information available to technicians working on residential and light commercial heating and air conditioning equipment and controls. **71-97932** **$42.80**

Orderable in packs of 5 from: http://literature.honeywell.com/

- **Gas Controls Service Manual**
  All of the technical data and service information needed to safely and efficiently check and repair gas burner controls systems. Includes combination gas controls manufactured in the last 30 years for furnace, boiler and other heating appliance manufacturers, as well as service replacement controls.
- **Gas Electronic Ignition Controls Service Manual**
  Principles of controlling gas heating equipment including intermittent pilot, direct spark ignition and hot surface ignition. Model numbers and specifications for obsolete as well as currently manufactured controls, with information on making replacements of special models made for equipment manufacturers with universal replacement models available for service work. Includes troubleshooting flowcharts for old and new controls.
- **Oil Controls Service Manual**
  Control of oil burners is undergoing a major change as manufacturers are transitioning from electromechanical and electronic controls to microelectronic oil primary controls. This manual includes information on these controls as well as older devices that have been used for years.
- **Commercial Controls Service Manual**
  Introduction and fundamentals of electric and electronic controls used on commercial packaged and other light commercial equipment. Includes: motors and actuators, linkages, dampers and valves, electromechanical controllers, electronic sensors, electromechanical economizers, electronic solid state economizers, reset systems and fan coil systems.

RA890, R4795 and R7795 Service Handbook

Wiring and checkout, normal operation summary, flame current check, flame simulator, final checkout, service notes and test equipment. *59 pages* **70-8610/U** **$1.42**

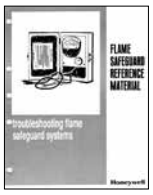

Troubleshooting Flame Safeguard Systems

Generalized troubleshooting information for the controls used on large burners and boilers. Information on recurring shutdowns, random shutdowns, measuring flame signal. Ten commandments for the burner service person, checking system operation and periodic maintenance. *11 pages* **70-8626** **$17.55**

Orderable in packs of 25 from: http://literature.honeywell.com/

These manuals and notebooks provide instructional support on the fundamentals of controls for residential and some light commercial heating and cooling applications.

- A ***Reference Manual***, or mini-text, is a clearly written text with easy-to-follow diagrams that detail the fundamentals of controls and control systems. Designed for use by the student as well as the instructor and organized so that the instructor can vary the outline to fit specific teaching goals. Includes reproductions of the program's overhead slides.
- A ***Student Notebook*** reinforces instruction and offers a check on student understanding through the use of exercises and review questions.

Oil Control and Electric Heating

Oil Heating Controls

Oil burner ignition and safety control systems for residential heating. Includes: fuel oil characteristics, oil burner primary controls, stack relay and cad cell flame detection systems, servicing oil burner control systems and general troubleshooting.

Student Notebook - Orderable in packs of 25 from: http://literature.honeywell.com/	**71-97090**	**$32.71**

Electric Heat Controls

The basics of residential electric heating control starting with a brief review of electrical principles and going through to service procedures. Information on influence of humidity, air circulation and radiant temperature on comfort; heating system performance in terms of response time, cycling rate, heat anticipation and timed sequencing; central and decentralized electric heating systems; servicing electric heat systems and troubleshooting.

Reference Manual - Orderable in packs of 5 from: http://literature.honeywell.com/	**71-97306**	**$8.43**
Student Notebook - Orderable in packs of 5 from: http://literature.honeywell.com/	**71-97308**	**$3.79**

ControlPro Reference Material

These publications are part of the ControlPro one-day class for heating and air conditioning technicians, and are good references for anyone needing information on Oil or Hydronic Heating Controls.

Controls for Oil-Fired Heating

The "textbook" for the ControlPro Oil class. Includes: fuel oil and oil burning equipment, ignition requirements, oil burner control requirements, stack relays, cad cell primary controls, oil primary controls, oil control service and troubleshooting, glossary. *61 pages, 2005* — **71-97406** — **$30.75**

Orderable in packs of 25 from: http://literature.honeywell.com/

Hydronic Heating Controls Technical Reference

A compilation of all the specification data, installation and service publications on Honeywell's hydronic heating controls, including Aquastat® controllers, Aquastat® relays, zone controls, outdoor temperature compensation controls, thermostats and hydronic heating controls accessories. *415 pages, 2005* — **71-97480/U** — **$24.00**

FSG Textbook

FSG Textbook, “Flame Safeguard Controls: A Honeywell Textbook” 2nd edition
The most comprehensive and popular Flame Safeguard textbook available in our industry. It’s where the beginners begin and where the “Old Pros” return year after year and problem after problem.

Textbook

FSG Textbook, “Flame Safeguard Controls: A Honeywell Textbook”, *362 pages*

71-97558/U **$22.50**

Contents:

- *Introduction to Flame Safeguard* – Flame Safeguard functions and controls.
- *Combustion* – explanation of fuel types and flame characteristics.
- *Burners and Boilers* – description of representative burners and boilers.
- *Flame Rod Application* – design and installation of flame rods and rectification systems.
- *Optical Detector Applications* – description, operation, application and checkout of detectors; covering rectifying photocells, infrared, and ultraviolet detectors.
- *Primary Controls* – capabilities and operation of primary controls (RA890, R4795 and R7795) used on smaller burners
- *Programming Controls* – capabilities and operation of programming controls (R4140 and BC7000 Microcomputer Programmable Controls.
- *Troubleshooting FSG Systems* – outlines systematic procedures for isolating common Flame Safeguard problems.
- *Service Equipment* – description and operation of testers, simulators and meters.
- *Auxiliary Equipment* – description, operation, application and checkout of pressure and temperature controllers.
- *Valves and Valve Trains* – description and application of typical Flame Safeguard valves and valve trains.
- *Sizing and Application of Large Gas Valves* – principles and procedures for selecting gas valves (includes selection nomographs).
- *Firing Rate Controls* – covers methods for controlling firing rate, firing rate sequences, programmer switching, motors and valves.
- *Glossary* – Flame Safeguard terminology.

These reference manuals are collations of Honeywell publications used to apply, install and service various categories of control products. Combined they represent virtually all of the technical information Honeywell publishes on its residential and light commercial electric and electronic controls.

Reference Manuals

THE SOURCE Reference Material for Gas Ignition

These are the publications used with *The Source* gas ignition technical training program.

- **THE SOURCE Technical Reference**
  A compilation of all the specification data, installation and service publications on Honeywell's residential gas ignition controls such as gas valves, ignition modules and electronic fan timers. *634 pages, 2004* — **71-97414** — **$33.69**

Orderable in packs of 5 from: http://literature.honeywell.com/

- **THE SOURCE Class Notes and Lab Exercises**
  Reproductions of the visuals used in *The Source* classroom training program along with the lab exercises that make up Honeywell's popular training program on gas ignition controls. *114 pages, 2003* — **71-97162** — **$118.75**

Orderable in packs of 25 from: http://literature.honeywell.com/

The Firing Line

A comprehensive manual designed to facilitate the upgrading and replacement of burner and boiler controls in commercial and industrial applications. Extensive information on approval bodies to explain what type of controls are required to meet various codes. Subjects include how to sell control modernization, how to sell replacement, conversion wiring, handy survey guides and worksheets. — **70-8900/U** — **$125.00**

The Firing Line CD-ROM Version

The CD-ROM version of The Firing Line is a comprehensive reference media designed to facilitate the upgrade/replacement of burner and boiler controls in commercial and industrial applications. *1996* — **66-1081/U** — **$25.00**

Flame Safeguard Reference Manual

Specification sheet collation on: primary controls, programming controls, gas valves, flame sensors, FSG motors, ignition transformers, pressure controls/limits, reset controls, multiple boiler controls, low water cutoff, and feed water valve. — **66-1004/U** — **$135.00**

7800 Series Burner Control Manual

This manual contains promotional literature, features/functions/benefits, product selection submittal information, programmers, semi-automatic programmers, primaries, semiautomatic primaries, subbases, amplifiers, purge cards, optional components, expanded annunciator, communications, tester, accessories, conversion wiring diagrams, diagnostics, and troubleshooting, and cross references. In 3-ring poly binder. — **66-1065/U** — **$55.00**

Reference Manuals

Reference Manuals

Engineering Manual of Automatic Control for Commercial Buildings - Soft cover

The 21st edition of this widely used and extremely valuable manual. Now includes direct digital control and operator workstations, as well as other current control technology and strategies. The 500+ pages guide the reader through the fundamentals of control system theory, direct digital control, building management systems and a dozen other disciplines essential to proper environmental control in buildings. In this edition, microprocessor controls are shown in most of the control applications, rather than pneumatic, electric or electronic controls, to reflect the trends in today's industry. Also included is new information on indoor air quality and district heating. Often referred to as the "Gray Manual," this technical resource has been a standard among engineering design professionals since it was first published in 1934. *Revised 1997*

77-1100/U **$24.00**

Zoning Systems Reference Manual

A comprehensive reference on the Honeywell residential zoning capability. Includes Consumer Literature, System Design, Zone and Bypass Dampers, Networked Zoning, TotalZone, EMM Series, MM-2 and MM-3, Thermostats, Control Accessories and Fresh Air.

63-7067/U **$10.00**

Water Control Product Catalog

Honeywell Catalogue - Full Line of Quality Products for Water Management Solutions: Water Controls Products, Hydronic Heating, Plumbing and Energy Products.

- Honeywell Water Products: Mixing Valves, Air Vents, Boiler feed Valves/Back Flow Preventer, Expansion Tanks/Combo Kits, Honeywell Thermometers and Tridicators, DS05, DS06 DialSet Pressure Regulation Valves, T104/V110 High Capacity Thermostatic Radiator Valves, MT100/MT110 Service Tools, F74 Water Sediment Filters, D05/D06 Universal Pressure Regulating Valves, T100/V100 Standard capacity TRV, V135/T100 Loop Controls for radiant floor applications

63-8702/U **$1.70**

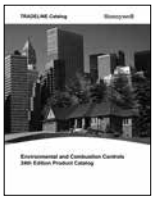

Honeywell TRADELINE Catalog

Recently updated, this product catalog is an education in itself—over 1,000 pages of specifications and application information on Honeywell's residential, light commercial and burner and boiler controls. Included are Home Control products, Water Control products, Building Control products, Indoor Air Quality Products, Pneumatic Controls and Flame Safeguard Products.

70-6910/U **$7.00**

A lab trainer requires the student to actually perform point-to-point wiring to achieve a properly functioned control system.

Demonstrators

DSP3168 Gas Ignition Trainer

The DSP3168 is a suitcase-style hands-on laboratory workstation designed to support instruction in gas ignition controls as used on residential gas heating equipment and some commercial cooking equipment. Using point-to-point wiring, students wire up actual controls to simulate the operation of a number of types of gas ignition systems, using a small propane-fired burner.

DSP3168/U **$1,750.00**

The DSP3168 can be set up to simulate the following types of gas ignition systems:

- Intermittent Pilot Ignition utilizing electronic flame detection to provide pilot safety.
- Direct Spark Ignition uses a spark electrode and a separate electronic flame detector electrode to directly light the main burner in a furnace, boiler or some other heating or cooking appliance.
- Hot Surface Ignition uses a hot surface igniter to directly light the main burner.
- SmartValve uses electronic flame sensing (flame rectification). This combines gas flow control and electronic intermittent pilot sequencing functions into a single unit. The low voltage igniter, and flame sensor on the pilot burner plug directly into the system control.

The DSP3168 lab trainer includes the following control and accessories: Honeywell VR8204, VR8205, and SV9501 gas valves; S8610U, S87D, and S8910U electronic ignition surface modules, and LP regulator and hose, ignition cable, wires with banana plugs, timing tab for S8910U, a propane tank holder, and an accessory box containing a spark adapter, direct spark igniter, intermittent pilot igniter-flame sensor Allen wrench and screws. Propane not included.

Using the banana plug wires, the student connects the controls and devices into the proper 120V and 24V circuits, both of which are fused.

Also included: a controls/devices list, lab exercises, a troubleshooting sheet, and reference material from THE SOURCE gas ignition training program.

DSP3564 ControLinks™ Demonstrator

The DSP3564 is designed for use in training on the Honeywell ControLinks™ Fuel Air Control System.

DSP3564/U **$1,575.00**

The demonstrator contains the following items:

- One RM7800L1012 — One R7847A1033
- One ST7800A1021 — One Q7800A1005
- One R7999A1005 — One Q7999A1006
- Four ML7999A1003 — Six Indicator Lights
- One 1-5K Pot — One 2-1K Pot
- Six SPST Toggle Switches — One Carrying Case with handle (22" x 16" x 6")

DSP3981 ControLinks FAR Configuration Toolkit

The DSP3981 Toolkit includes USB-485 Converter with cable and Connector for ControLinks; ZM Software

DSP3981/U **$2,277.75**

DSP3943 SOLA Demonstrator

The DSP3943 is used as a SOLA commissioning or monitoring tool when a System or Local Operator Interface is not required for operation. The DSP contains the S7999B1026 touchscreen display which uses a wizard-like process to assist you through the commissioning process.

DSP3944/U **$4,791.03**

DSP3980 SOLA Demonstrator

The DSP3980 contains an S7999D1006 Touchscreen Display to commission or monitor the SOLA system when a System or Local Operator Interface is not required for operation. The DSP3980 includes the power supply for operation and cable with connector for the SOLA system. A USB storage drive is provided to save display screen snapshots or trending information.

DSP3980/U

Lab Trainers

Demonstrators

Burner and Boiler Controls Demonstrator Instructors Manual

This Manual is the Instructor's version of the Operating Training Board Exercises for the DSP3472. **71-97117** **$66.08**

Orderable in packs of 25 from: http://literature.honeywell.com/

Burner and Boiler Controls Demonstrator Student Workbook

This Manual contains the Operating Training Board Exercises for the student for the DSP3472. **71-97116** **$66.08**

Orderable in packs of 25 from: http://literature.honeywell.com/

Order online
You can order online at http://customer.honeywell.com
If you are already a Honeywell customer, please login with your name and password. You can then go to the quick order form and fill it out to place your order.

Some products are available through the Print-On-Demand site at http://Literature.honeywell.com

Shipping
All U.S. orders for training materials are shipped freight collect, UPS ground. Please pay with a credit card and the charges will be added to your total.

Expedited Orders
When requested, we will expedite an order and ship by air, but you must pay by credit card and you will be billed for the shipping costs.

International Orders
International orders *MUST be* placed through your local Honeywell subsidiary. They can advise you on ordering and shipping procedures. We cannot accept or ship international orders.

Returns
Returned items are accepted within four months of purchase. There are no cash refunds, and a $30 restocking fee *per item* will be deducted from your credit. You are responsible for return shipping costs. The address for returns is printed on the bill of lading. Please call or fax in advance of your return and provide a list of the items that you are returning and a reason as to why you are returning them.

Form of Payment
For online orders, payment must be made by VISA, MasterCard, or American Express card or a company purchase order.

Inquiries
If it is necessary to contact us regarding your order, please provide the following information:

The date the order was placed, your account number, the web order number (found on the order confirmation) and the reference number.

Contact us at:

Honeywell International Inc.
MN10-131A
1985 Douglas Drive North
Golden Valley, MN 55422
FAX: 800-356-0149
PHONE: 763-954-5720

Note: Please allow 1 to 2 weeks to process and fill your order.

Notes

Honeywell

ENVIRONMENTAL AND COMBUSTION CONTROL
WARRANTY POLICY

Honeywell warrants the products in this catalog (except those parts designated on Honeywell's price lists as not covered by this warranty) to be free from defects due to workmanship or materials, under normal use and service, for the following warranty periods.

Sixty (60) months from date of installation
- Prestige®, Prestige® IAQ, Lyric Thermostat, VisionPRO®, Commercial VisionPRO®, CommercialPRO®, FocusPRO®, Wireless FocusPRO®, PRO 4000, PRO 3000, LineVoltPRO™, Digital Round™, and Modern Round ™ (T87K, N) Series Thermostats with a date code of 0501 or later
- Air Cleaners, Humidifiers, Ventilators, Ultraviolet Treatment and Zoning products with a date code of 0501 or later, excluding replacement maintenance parts
- Indoor air quality products F50, F52, F300, F200, F150, UV100E, HE225, HE265, HE365, with date codes of 0452 or earlier, excluding replacement maintenance parts
- MS, MN and fast acting 2-position Direct Coupled Actuators
- JADE economizer when used with Honeywell sensors and actuators
- AquaPUMP circulating pump
- C7189R RedLINK Wireless Indoor Air Sensor
- C7061 UV Detector

Sixty (60) months from date of manufacture
- Access and Video Systems power supplies

Thirty-six (36) months from date of shipment
- Variable frequency drive devices (VFD) and accessories

Thirty-six (36) months from date of installation
- AUBE branded thermostats, timers, and switches

Twenty-four (24) months from date of installation
- SuitePRO thermostats
- PRO 2000 and PRO 1000 thermostats
- Other Honeywell indoor air quality and zoning products with a date code of 0452 or earlier, unless otherwise specified
- AQ2000 Aquatrol panels and AQ1000 thermostats
- RedLINK Entry/Exit Remote
- RedLINK Vent Boost Remote

Twenty-four (24) months from date of manufacture
- Pan-Tilt-Zoom Domes for Access and Video Systems

Eighteen (18) months from date of shipment,
- All WEBs building automation and security parts, unless specified otherwise (warranty replacement parts will be warranted for 90 days or the balance of the original warranty period, whichever is longer)

Twelve (12) months from date of installation
- Water Solutions products
- Other Honeywell thermostats and thermostats with a date code of 0452 or earlier, unless specified otherwise
- RedLINK Wireless Outdoor Air Sensor
- RedLNK Portable Comfort Control
- RedLINK Internet Gateway

Twelve (12) months from date of shipment
- Building automation security accessories

Twelve (12) months from date of manufacture
- Keyboards, Controllers and other Access and Video System accessories.

Ninety (90) days from date of manufacture
- IR Halogen bulbs for Access and Video Systems

The warranty period for all other products is twelve (12) months from date of installation.

If a product is defective due to workmanship or materials, is removed within the applicable warranty period, and is returned to Honeywell in accordance with the procedure described below, Honeywell will, at its option, either repair, replace or credit the customer for the purchase price of the product, in accordance with the procedure described below. This warranty extends only to persons or organizations who purchase products in this catalog for resale.

The expressed warranty above constitutes the entire warranty of Honeywell with respect to the products in this catalog and IS IN LIEU OF ALL OTHER WARRANTIES, EXPRESS OR IMPLIED, INCLUDING ANY WARRANTY OF MERCHANTABILITY OR WARRANTY OF FITNESS FOR A PARTICULAR PURPOSE. IN NO EVENT SHALL HONEYWELL BE RESPONSIBLE FOR ANY CONSEQUENTIAL DAMAGES OF ANY NATURE WHATSOEVER.

INSTRUCTIONS—INSTALLING OR SERVICING CONTRACTOR OR DEALER

When replacing a Honeywell product under warranty, including those products furnished on original heating and/or cooling equipment, you should rely on your local Honeywell Wholesaler or Distributor for prompt and efficient product replacement service.

No warranty claim for product replacement or credit will be honored by Honeywell without a completed return authorization form or a manual return authorization form issued by Honeywell Customer Care.

INSTRUCTIONS—WHOLESALER OR DISTRIBUTOR

The following will apply to the return of any product to Honeywell under this warranty, except any products which are not variable frequency drives or WEBS and are:

(i) identified with a Honeywell Return Authorization Form (obtained from the B2B website at Customer.Honeywell.com)
(ii) display the Return Authorization Form number and return address label on the outside of the return carton. Make sure a copy of the form is enclosed in the return carton
(iii) packed separately from other returns and protected from shipping damage;
(iv) have certification by the installer or servicing dealer that the product was removed, due to failure, within the applicable warranty period;
(v) are received transportation pre-paid at the facility listed on the shipping and/or packing slip.
(vi) and are found by Honeywell's inspection to be defective in workmanship or materials under normal use and service

will be handled in accordance with one of the two following procedures, as specified by the customer making the return.

1. *CREDIT PROCEDURE.* Honeywell will issue credit, at Honeywell's lowest wholesaler net price in effect at the time of the return (as set forth on Honeywell's then current price sheet) or at the actual invoice amount if a copy of that invoice is attached to the packing list. (TRADELINE Replacement Exchange Products will be at Honeywell's lowest replacement exchange net price in effect at the time of such return, as shown on Honeywell's then current price sheet.) Honeywell reserves the right to disallow this credit option in cases of warranty abuse.
2. *REPLACEMENT PROCEDURE.* Warranty replacement procedure must be used for in-warranty emergency replacement orders. Customer will not be credited for items not meeting warranty criteria as outlined by policy. Please return the defective item to the address listed on the return authorization form.

List Water Solutions products on a separate Return Goods Order form, marked "**Water Solutions**".

All new and unused VBN control ball valves MUST be approved by your Honeywell sales representative before returned.

WEBs return products must be processed through WEBs Customer Care. Defective hardware products under warranty have to be returned to Tridium in Richmond, VA. Security Access and Video products must have prior authorization.

All VFD warranty return products must be coordinated through the Commercial Components Hotline (1-888-516-9347 option 4) staff and VFD Warranty and Repair Program Coordinator (ECC-VFD Coordinator) . All VFD warranty returns must have prior authorization and must be returned to the specified Honeywell VFD Service Center.

The warranty will not be honored if:

(i) product is damaged or missing parts or accessory items including batteries.
(ii) product exhibits evidence of field misapplications.

Final disposition of any warranty claim will be determined solely by Honeywell. If inspection by Honeywell does not disclose any defect covered by the warranty, the product will be returned or scrapped as instructed by the customer and Honeywell's regular service charges will apply. Products returned to the customer may be sent shipping charges collect.

If you have any questions relative to product returns to Honeywell, contact your Customer Care Representative:

Honeywell International Inc.
Customer Care MN10-131A
1985 Douglas Drive
Golden Valley, MN 55422
1-888-793-8193

SPECIAL MESSAGE TO INDUSTRIAL USERS AND BUILDING OWNERS

Thank you for using Honeywell products.

As a user, when you purchase a Honeywell product from this catalog you should expect performance from the product and, if it fails, replacement of the product by the installing dealer.

Typically, you will have purchased a Honeywell product under the following circumstances:

1. To modernize or refurbish your existing commercial and/or process control system.
2. You have purchased new commercial and/or process heating, cooling, air cleaning or humidification equipment that is furnished with Honeywell controls or components (refer to your owner's manual furnished with the equipment).
3. A control has failed on your existing commercial and/or process heating and/or cooling equipment and is replaced by a Honeywell TRADELINE product.

With few exceptions, you utilize the services of a competent plumbing, heating and/or cooling dealer/contractor for new or replacement work performed.

Although our warranty does not extend to you, Honeywell does extend a warranty to your supplier.

Your supplier can rely on its local Honeywell Wholesaler/Distributor or Honeywell for prompt replacement.

If you have any questions, need additional information or would like to comment on Honeywell's products or services, please write or phone:

Honeywell International Inc.
Customer Care MN10-131A
1985 Douglas Drive North
Golden Valley, MN 55422-4386
1-888-793-8193

or check your telephone directory (white pages) for one of many Honeywell field sales offices.

Honeywell | Automation and Control Solutions

Honeywell International Inc.
1985 Douglas Drive North
Golden Valley, MN 55422
customer.honeywell.com

® U.S. Registered Trademark
© 2015 Honeywell International Inc.
70-6910 Rev. 03-16